T-CLASS ™
TPA*S4 — M and T Voltage Units

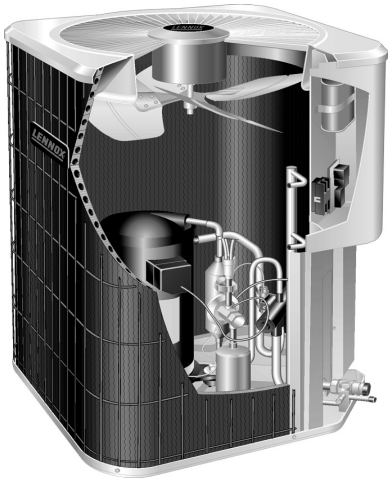

⚠ WARNING

Improper installation, adjustment, alteration, service or maintenance can cause personal injury, loss of life, or damage to property.

Installation and service must be performed by a licensed professional installer (or equivalent) or a service agency.

⚠ IMPORTANT

The Clean Air Act of 1990 bans the intentional venting of refrigerant (CFCs, HCFCs AND HFCs) as of July 1, 1992. Approved methods of recovery, recycling or reclaiming must be followed. Fines and/or incarceration may be levied for noncompliance.

⚠ WARNING

Electric Shock Hazard. Can cause injury or death. Unit must be grounded in accordance with national and local codes.

Line voltage is present at all components when unit is not in operation on units with single-pole contactors. Disconnect all remote electric power supplies before opening access panel. Unit may have multiple power supplies.

TABLE OF CONTENTS

Specifications and Electrical Data 2
Unit Dimensions 2
Typical Control Panel Parts Arrangement 4
Typical Unit Parts Arrangement 5
Model Number Identification 5
Unit Components 6
General Information 8
Operating Gauge Set and Service Valves 8
Recovering Refrigerant from Existing System 10
Unit Placement 11
New or Replacement Line Set 12
Metering Devices and Flushing the System 15
Testing for Leaks 16
Evacuating the System 17
Electrical Connections 18
Servicing Unit Void of Charge 20
Unit Start-Up 20
System Refrigerant 20
System Operation 24
Defrost System 24
Maintenance 24
Start-Up and Performance Checklist 28
Wiring Diagrams and Sequence of Operations 29

The TPA*S4 is a commercial split-system heat pump. All major components (indoor blower and coil) must be matched according to Lennox recommendations for the compressor to be covered under warranty. Refer to the Engineering Handbook for approved system matchups.

⚠ IMPORTANT

This model is designed for use in expansion valve systems only. An indoor check expansion valve approved for use with HFC-410A refrigerant must be ordered separately, and installed prior to operating the system.

This instruction is specifically for the following model voltage configurations:

- M Voltage — 380/420VAC, 3-Phase, 50 Hertz
- T Voltage — 220/240VAC, 1-Phase, 50 Hertz

Specifications and Electrical Data1

SPECIFICATIONS - SINGLE PHASE					
General Data	Model No.		**TPA024S4**	**TPA036S4**	**TPA048S4**
	Nominal kW		7	10.5	14.0
Connections (sweat)	Liquid line o.d. - in.		3/8	3/8	3/8
	Vapor line o.d. - in.		3/4	7/8	7/8
[1] Refrigerant (R–410A) furnished			2.95 kg (6 lbs. 8 oz.)	2.86 kg (6 lbs. 5 oz.)	5.30 kg (11 lbs. 11 oz.)
Outdoor Coil	Net face area m^2 (sq. ft.)	Outer coil	1.41 (15.21)	1.41 (15.21)	1.96 (21.11)
		Inner coil	- - -	1.44 (15.50)	1.98 (21.31)
	Tube diameter - in.		5/16	5/16	5/16
	Number of rows		1	2	2
	Fins per meter (inch)		866 (22)	866 (22)	866 (22)
Outdoor Fan	Diameter - mm (in.)		457 (18)	457 (18)	559 (22)
	Number of blades		3	4	4
	Motor W (hp)		149 (1/5)	149 (1/5)	248 (1/3)
	L/s (Cfm)		945 (2000)	965 (2042)	1530 (3242)
	Rev / min		942	917	904
	Watts		138	158	313
Shipping Data - kg (lbs.) 1 package			64 (140)	82 (180)	113 (250)
Electrical Data					
	Line voltage data - 50 hz - 1ph		220 / 240V	220 / 240V	220 / 240V
	[2] Maximum overcurrent protection (amps)		25	35	35
	[3] Minimum circuit ampacity		14.7	21.1	21.6
Compressor	Rated load amps		10.9	16.0	15.9
	Locked rotor amps		60.0	87.0	98.0
	Power factor		1.1	1.1	1.7
Outdoor Fan Motor	Full load amps		2.0	2.0	4.1
	Locked rotor amps		1.9	1.9	4.1

NOTE - Extremes of operating range are plus 10% and minus 5% of line voltage.
[1] Refrigerant charge sufficient for 4.6 m (15 ft.) length of refrigerant lines.
[2] Heating Air Conditioning and Refrigeration type circuit breaker or fuse.
[3] Refer to local codes to determine wire, fuse and disconnect size requirements.

SPECIFICATIONS - THREE PHASE					
General Data		Model No.	**TPA036S4**	**TPA048S4**	**TPA060S4**
		Nominal kW	10.5	14.0	17.6
Connections (sweat)		Liquid line o.d. - in.	3/8	3/8	3/8
		Vapor line o.d. - in.	7/8	7/8	1-1/8
[1] Refrigerant (R–410A) furnished			2.86 (6 lbs. 5 oz.)	5.30 (11 lbs. 11 oz.)	6.24 (13 lbs. 12 oz.)
Outdoor Coil	Net face area m^2 (sq. ft.)	Outer coil	1.41 (15.21)	1.96 (21.11)	2.28 (24.50)
		Inner coil	1.44 (15.50)	1.98 (21.31)	2.19 (23.56)
		Tube diameter - in.	5/16	5/16	5/16
		Number of rows	2	2	2
		Fins per meter (inch)	866 (22)	866 (22)	866 (22)
Outdoor Fan		Diameter - mm (in.)	457 (18)	559 (22)	559 (22)
		Number of blades	4	4	4
		Motor W (hp)	125 (1/6)	250 (1/3)	185 (1/4)
		L/s (Cfm)	965 (2042)	1530 (3242)	1505 (3192)
		Rev / min	917	904	692
		Watts	158	313	275
Shipping Data - kg (lbs.) 1 package			82 (180)	113 (250)	116 (255)
Electrical Data					
		Line voltage data - 50 hz - 3ph	380 / 420V	380 / 420V	380 / 420V
		[2] Maximum overcurrent protection (amps)	10	10	15
		[3] Minimum circuit ampacity	8.0	8.6	10.7
Compressor		Rated load amps	6.0	6.1	7.8
		Locked rotor amps	46.0	43.0	51.5
		Power factor	0.55	1.0	1.0
Outdoor Fan Motor		Full load amps	1.1	2.2	2.3
		Locked rotor amps	1.9	4.1	3.1

NOTE - Extremes of operating range are plus 10% and minus 5% of line voltage.
[1] Refrigerant charge sufficient for 4.6 m (15 ft.) length of refrigerant lines.
[2] Heating Air Conditioning and Refrigeration type circuit breaker or fuse.
[3] Refer to local codes to determine wire, fuse and disconnect size requirements.

OPTIONAL ACCESSORIES

For update-to-date information, see any of the following publications:

- Lennox TPA*S4 Engineering Handbook
- Lennox Commercial Price Book

Unit Dimensions - inches (mm)2

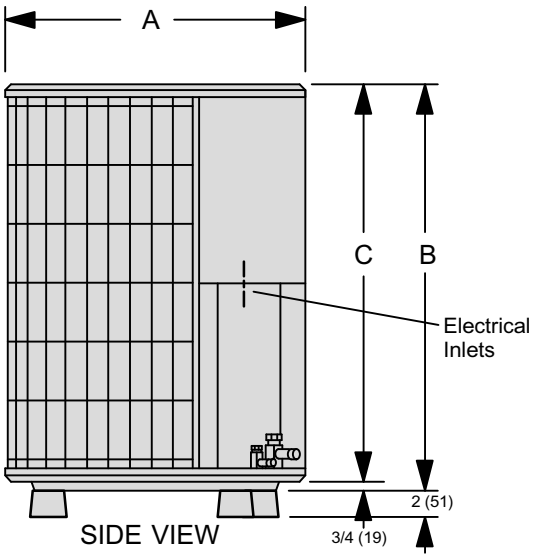

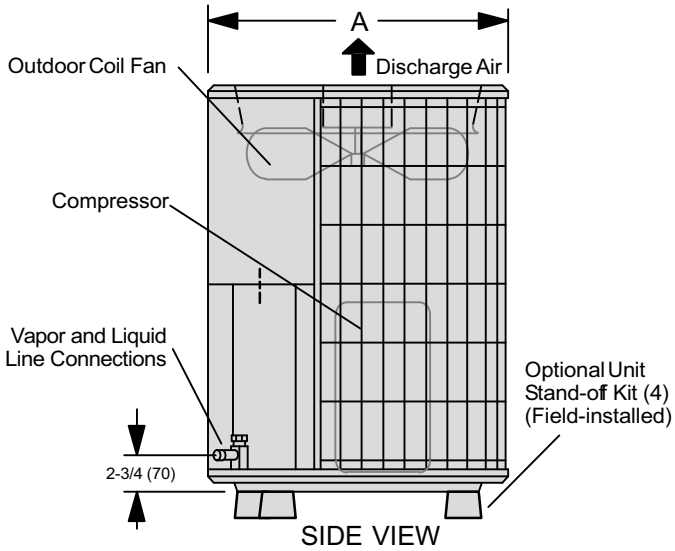

Model No.	A	B	C
TPA024S4N41T	24-1/4 (616)	33-1/4 (845)	32-1/2 (826)
TPA036S4N41M	24-1/4 (616)	33-1/4 (845)	32-1/2 (826)
TPA036S4N41T	28-1/4 (718)	37 (940)	36-1/4 (921)
TPA048S4N41M	28-1/4 (718)	37 (940)	36-1/4 (921)
TPA048S4N41T	28-1/4 (718)	37 (940)	36-1/4 (921)
TPA060S4N41M	28-1/4 (718)	43-1/4 (1099)	42-1/2 (1080)

Typical Control Panel Parts Arrangement3

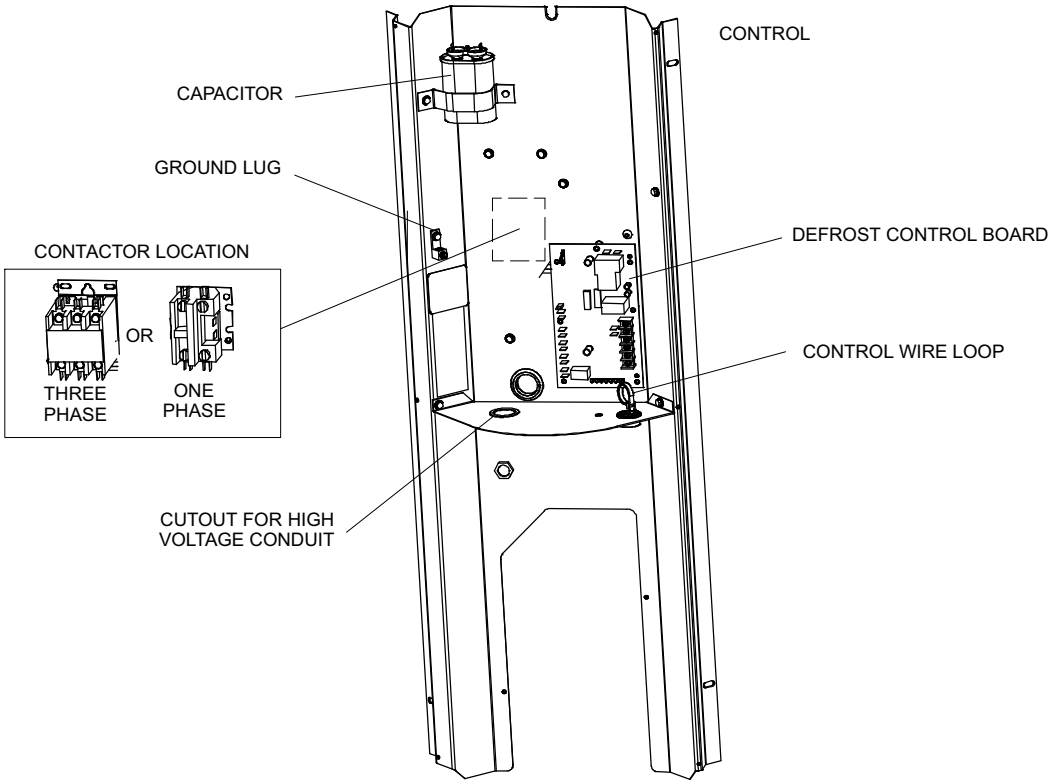

Typical Unit Parts Arrangement4

NOTE: PLUMBING LAYOUT MAY VARY SLIGHTLY BETWEEN MODEL SIZES.

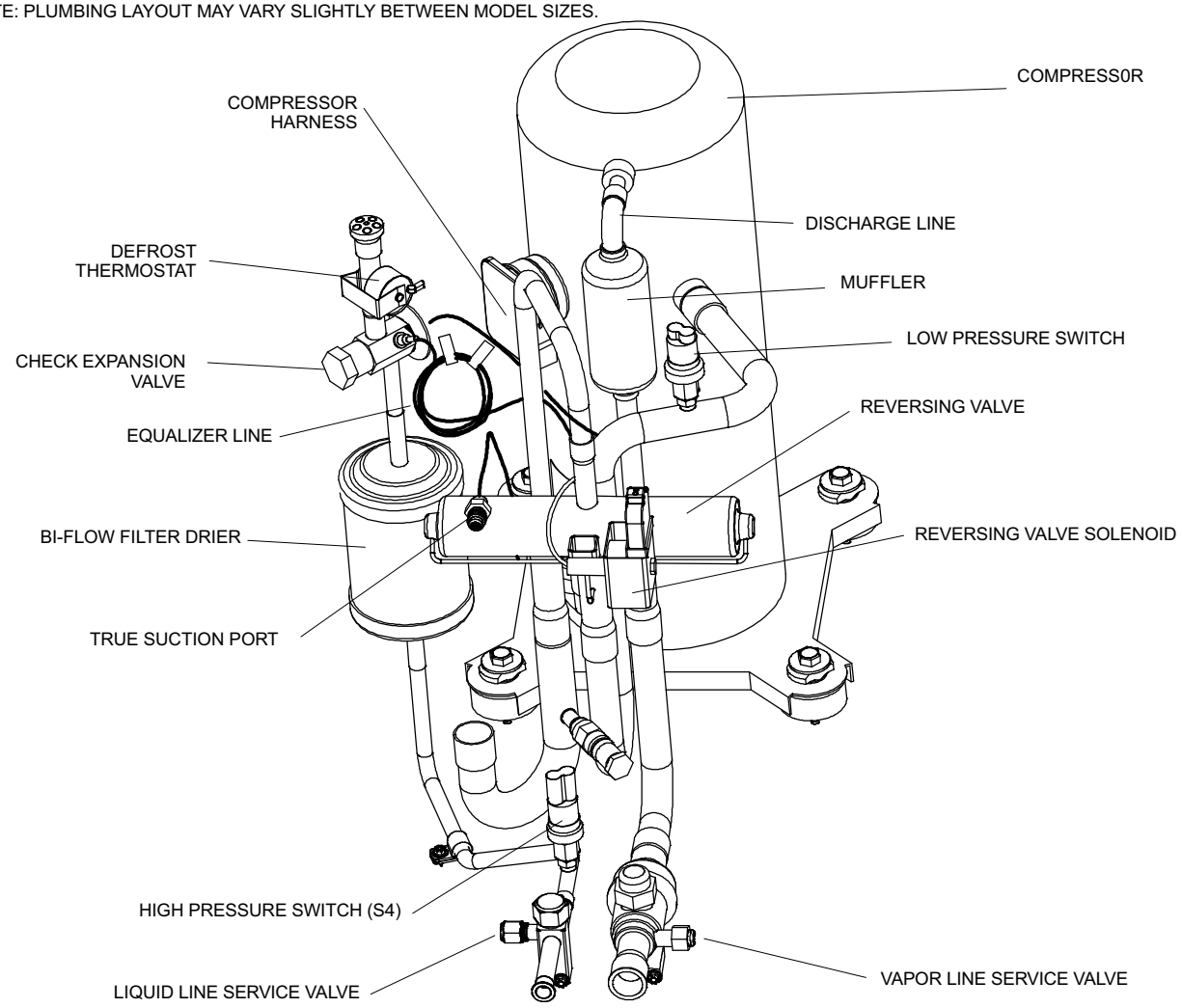

Model Number Identification5

T P A 036 S 4 N 4 1 M

Brand/Family
T = T-Class™ Product Line

Unit Type
P = Split-System Heat Pump

Major Design Sequence
A = 1st Generation
B = 2nd Generation

024 = 2 Ton
030 = 2.5 Tons
0036 = 3 Tons

048 = 4 Tons
060 = 5Tons

Cooling Efficiency
S = Standard Efficiency

Refrigerant Type
4 = R-410A

Part Load Capability
N = No part load, single stage compressor

Coil Type
4 = Four-sided

Minor Design Sequence
1 = 1st Revision
2 = 2nd Revision
3 = 3rd Revision

Voltage
M = 380/420V-3 phase 50hz
T = 220/240V-1 phase 50hz

Information contained in this manual is intended for use by qualified service technicians only. All specifications are subject to change. This manual is divided into sections which discuss the major components, refrigerant system, charging procedure, maintenance and operation sequence.

⚠ IMPORTANT

This unit must be matched with an indoor coil as specified in Lennox Engineering Handbook. Coils previously charged with HCFC-22 must be flushed.

Unit Components6

CONTROL BOX

TPA*S4 units are not equipped with a 24V transformer. All 24 VAC controls are powered by the indoor unit. Refer to wiring diagram.

Electrical openings are provided under the control box cover. Field thermostat wiring is made to color-coded pigtail connections.

COMPRESSOR CONTACTOR K1

The compressor is energized by a contactor located in the control box as illustrated on Page 4. One or three-pole contactors are used in this model. K1 is energized by the indoor thermostat terminal Y1 (24V) when thermostat demand is present.

CONDENSER FAN MOTOR B4 AND CAPACITOR C1

This model use a one-phase PSC fan motors which require a run capacitor C1 located in the control box. Ratings for C1 will be on fan motor nameplate. In all units, the condenser fan is controlled by the compressor contactor.

ELECTRICAL DATA tables in this manual show specifications for condenser fans used in this model.

Access to the condenser fan motor on all units is gained by removing the seven screws securing the fan assembly as illustrated in Figure 1. The condenser fan motor is removed from the fan guard by removing the four nuts found on the top panel. Drip loops should be used in wiring when servicing motor. See Figure 1 if condenser fan motor replacement is necessary.

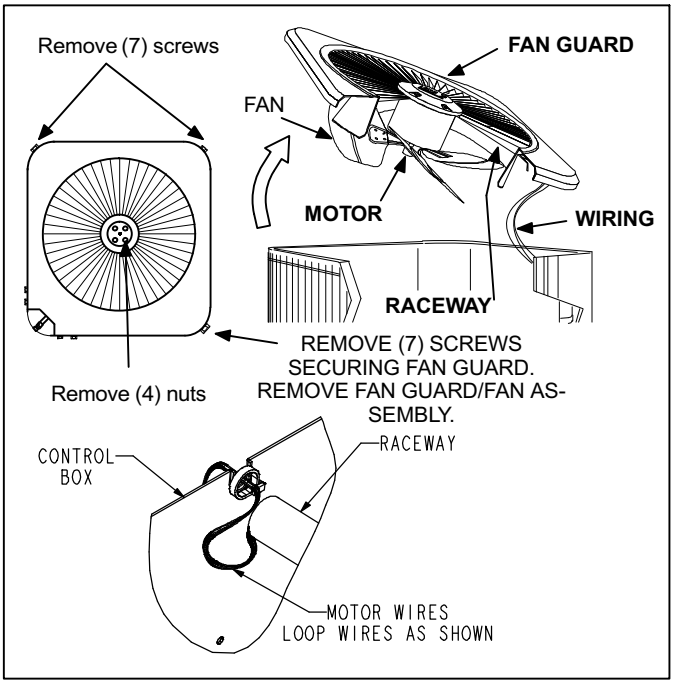

Figure 1. Condenser Fan Motor and Compressor Access

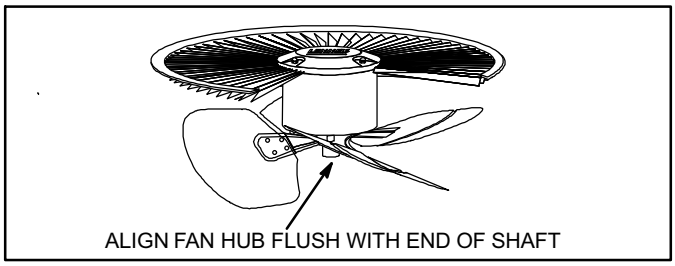

Figure 2. Fan Hub Alignment.

HIGH PRESSURE SWITCH S4

The manual-reset high pressure switch is located in the liquid line. When liquid line pressure exceeds the factory setting of 590 ± 10 psi, the switch opens and shuts off the compressor.

LOSS OF CHARGE SWITCH S24 (FIELD INSTALLED OPTION)

The loss of charge switch is N.C. auto re-set and located on the liquid line of the compressor. The switch opens when liquid line pressure drops to 25 + 5 psig and shuts off the compressor. The switch closes on a pressure rise at 55 + 5 psig. The settings are factory set and cannot be adjusted.

CRANKCASE HEATER HR1 AND OPTIONAL THERMOSTAT S40

Crankcase heater HR1 prevents liquid from accumulating in the compressor. HR1 is controlled by optional crankcase heater thermostat S40, located on the liquid line. When liquid line temperature drops below 50° F, S40 closes energizing HR1. S40 opens when liquid line temperature reaches 70°.

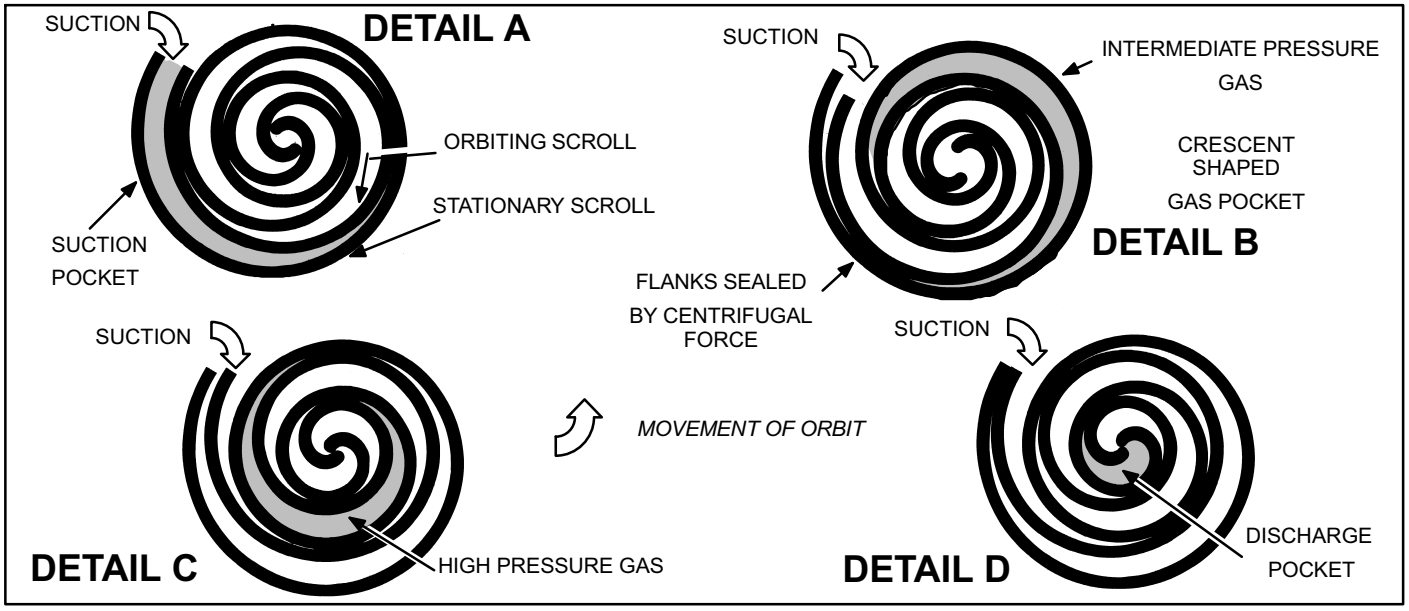

Figure 3. Scroll Compressors

REVERSING VALVE L1 AND SOLENOID

A refrigerant reversing valve with electromechanical solenoid is used to reverse refrigerant flow during unit operation. The reversing valve requires no maintenance. The only replaceable part is the solenoid. If the reversing valve itself has failed, it must be replaced.

If replacement is necessary, access reversing valve by removing the outdoor fan motor. Refer to figure 1.

BI-FLOW DRIER

A filter drier designed for all TPA4*S4 model units is located in the liquid line. The field installed drier is designed to remove moisture, which can lead to compressor failure. **Any time unit is exposed to open air due to service, drier must be replaced. All replacement driers must be approved for HFC-410A refrigerant.**

COMPRESSOR

All TPA*S4 units utilize a scroll compressor. The scroll compressor design is simple, efficient and requires few moving parts. A cutaway diagram of the scroll compressor is illustrated in Figure 4. The scrolls are located in the top of the compressor can and the motor is located just below. The oil level is immediately below the motor.

The scroll is a simple compression concept centered around the unique spiral shape of the scroll and its inherent properties. Two identical scrolls are mated together forming concentric spiral shapes as illustrated in Figure 5. One scroll remains stationary, while the other is allowed to orbit. Note that the orbiting scroll does not rotate or turn but merely orbits the stationary scroll.

NOTE - During operation, the head of a scroll compressor may be hot since it is in constant contact with discharge gas.

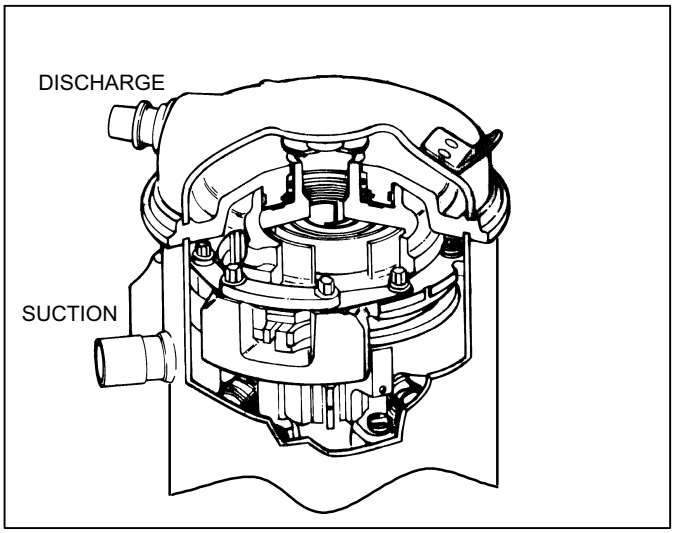

Figure 4. Scroll Compressor

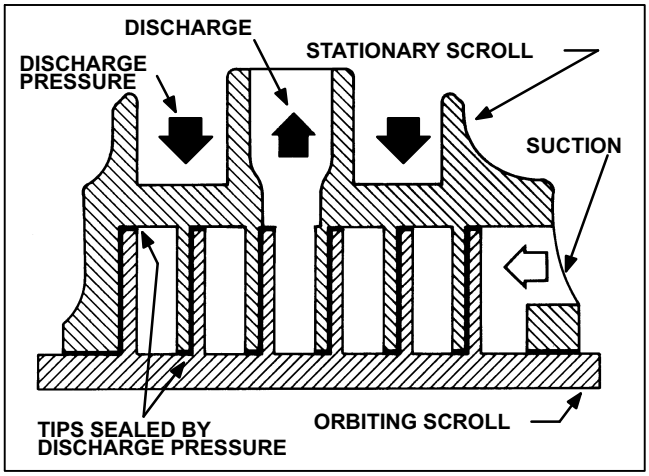

Figure 5. Scroll Cross-Section

The counterclockwise orbiting scroll draws gas into the outer crescent shaped gas pocket created by the two scrolls as illustrated in Figure 3, detail A. The centrifugal action of the orbiting scroll seals off the flanks of the scrolls as illustrate din Figure 3, detail B. As the orbiting motion continues, the gas is forced toward the center of the scroll and the gas pocket becomes compressed as illustrated in Figure 3, detail C. When the compressed gas reaches the center, it is discharged vertically into a chamber and discharge port in the top of the compressor as illustrate in Figure 5. The discharge pressure forcing down on the top scroll helps seal off the upper and lower edges (tips) of the scrolls as illustrated in Figure 5. During a single orbit, several pockets of gas are compressed simultaneously providing smooth continuous compression.

The scroll compressor is tolerant to the effects of liquid return. If liquid enters the scrolls, the orbiting scroll is allowed to separate from the stationary scroll. The liquid is worked toward the center of the scroll and is discharged. If the compressor is replaced, conventional Lennox cleanup practices must be used.

Due to its efficiency, the scroll compressor is capable of drawing a much deeper vacuum than reciprocating compressors. Deep vacuum operation can cause internal fusite arcing resulting in damaged internal parts and will result in compressor failure. Never use a scroll compressor for evacuating or to pump system into a vacuum. This type of damage can be detected and will result in denial of warranty claims.

The scroll compressor is quieter than a reciprocating compressor, however, the two compressors have much different sound characteristics. The sounds made by a scroll compressor do not affect system reliability, performance, or indicate damage.

See compressor nameplate or ELECTRICAL DATA for compressor specifications.

General Information7

These instructions are intended as a general guide and do not supersede local codes in any way. Consult authorities who have jurisdiction before installation.

Operating Gauge Set and Service Valves8

These instructions are intended as a general guide and do not supersede local codes in any way. Consult authorities who have jurisdiction before installation.

TORQUE REQUIREMENTS

When servicing or repairing heating, ventilating, and air conditioning components, ensure the fasteners are appropriately tightened. Table 1 lists torque values for fasteners.

⚠ IMPORTANT

Only use Allen wrenches of sufficient hardness (50Rc - Rockwell Harness Scale minimum). Fully insert the wrench into the valve stem recess.

Service valve stems are factory-torqued (from 9 ft-lbs for small valves, to 25 ft-lbs for large valves) to prevent refrigerant loss during shipping and handling. Using an Allen wrench rated at less than 50Rc risks rounding or breaking off the wrench, or stripping the valve stem recess.

See the Lennox Service and Application Notes #C-08-1 for further details and information.

⚠ IMPORTANT

To prevent stripping of the various caps used, the appropriately sized wrench should be used and fitted snugly over the cap before tightening.

When servicing or repairing HVAC components, ensure the fasteners are appropriately tightened. Table 1 provides torque values for fasteners.

Table 1. Torque Requirements

Parts	Recommended Torque	
Service valve cap	8 ft.- lb.	11 NM
Sheet metal screws	16 in.- lb.	2 NM
Machine screws #10	28 in.- lb.	3 NM
Compressor bolts	90 in.- lb.	10 NM
Gauge port seal cap	8 ft.- lb.	11 NM

USING MANIFOLD GAUGE SET

When checking the system charge, only use a manifold gauge set that features low loss anti-blow back fittings.

Manifold gauge set used with HFC-410A refrigerant systems must be capable of handling the higher system operating pressures. The gauges should be rated for use with pressures of 0 - 800 psig on the high side and a low side of 30” vacuum to 250 psig with dampened speed to 500 psi. Gauge hoses must be rated for use at up to 800 psig of pressure with a 4000 psig burst rating.

OPERATING SERVICE VALVES

The liquid and vapor line service valves are used for removing refrigerant, flushing, leak testing, evacuating, checking charge and charging.

Each valve is equipped with a service port which has a factory-installed valve stem. Figure 6 provides information on how to access and operating both angle and ball service valves.

SERVICE VALVES

VARIOUS TYPES

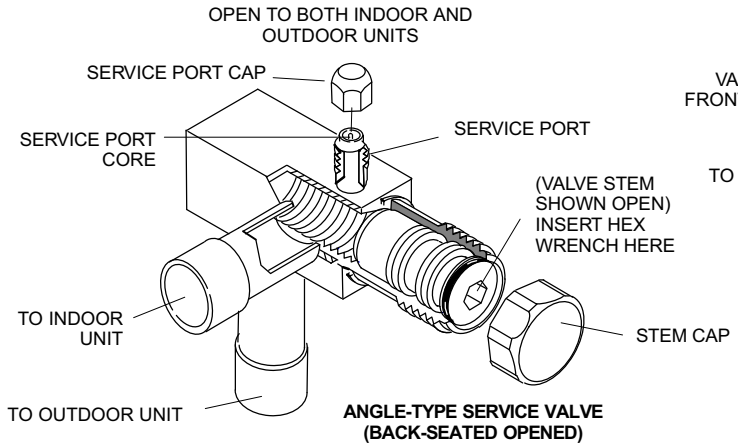

ANGLE-TYPE SERVICE VALVE (BACK-SEATED OPENED)

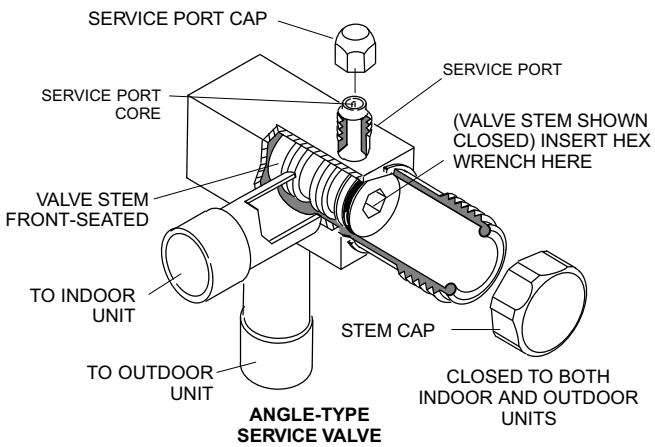

ANGLE-TYPE SERVICE VALVE (FRONT-SEATED CLOSED)

WHEN SERVICE VALVE IS CLOSED, THE SERVICE PORT IS OPEN TO THE LINE SET AND INDOOR UNIT.

WHEN SERVICE VALVE IS OPEN, THE SERVICE PORT IS OPEN TO LINE SET, INDOOR AND OUTDOOR UNIT.

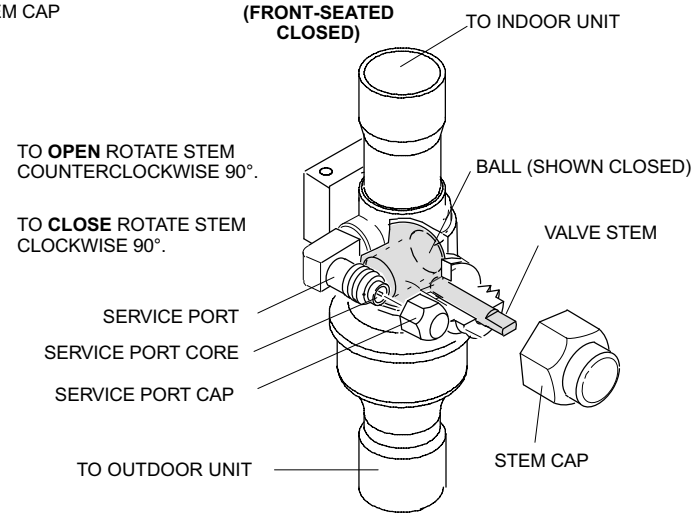

BALL-TYPE SERVICE VALVE

To Access Service Port:

A service port cap protects the service port core from contamination and serves as the primary leak seal.

1. Remove service port cap with an appropriately sized wrench.
2. Connect gauge set to service port.
3. When testing is completed, replace service port cap and tighten as follows:
   - With Torque Wrench: Finger tighten and torque cap per Table 1.
   - Without Torque Wrench: Finger tighten and use an appropriately sized wrench to turn an additional 1/6 turn clockwise.

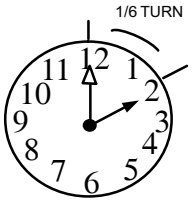

Operating Angle Type Service Valve:

1. Remove stem cap with an appropriately sized wrench.
2. Use a service wrench with a hex-head extension (3/16” for liquid line valve sizes and 5/16” for vapor line valve sizes) to back the stem out counterclockwise as far as it will go.

Operating Ball Type Service Valve:

1. Remove stem cap with an appropriately sized wrench.
2. Use an appropriately sized wrenched to open. To open valve, rotate stem counterclockwise 90°. To close rotate stem clockwise 90°.

Reinstall Stem Cap:

Stem cap protects the valve stem from damage and serves as the primary seal. Replace the stem cap and tighten as follows:

- With Torque Wrench: Finger tighten and then torque cap per Table 1.
- Without Torque Wrench: Finger tighten and use an appropriately sized wrench to turn an additional 1/12 turn clockwise.

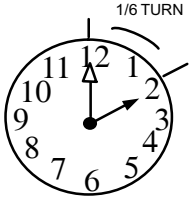

NOTE — A label with specific torque requirements may be affixed to the stem cap. If the label is present, use the specified torque.

Figure 6. Angle and Ball Service Valves

RECOVERING

REFRIGERANT FROM SYSTEM

1 DISCONNECT POWER

Disconnect all power to the existing outdoor unit at the disconnect switch or main fuse box/breaker panel.

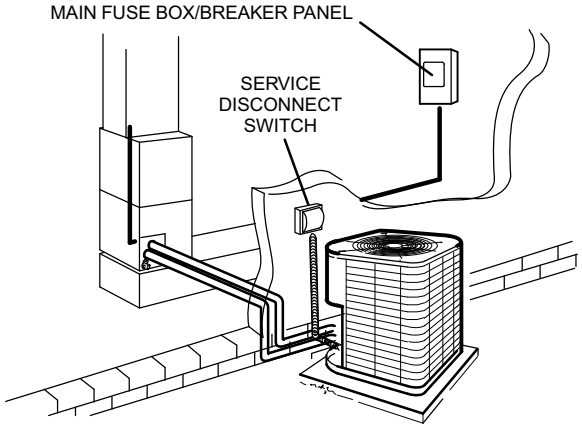

2 CONNECT MANIFOLD GAUGE SET

Connect a gauge set, clean recovery cylinder and a recovery machine to the service ports of the existing unit. Use the instructions provided with the recovery machine to make the connections.

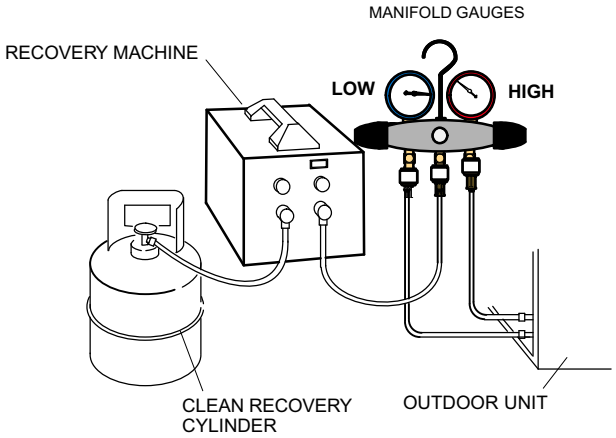

3 RECOVERING REFRIGERANT

Remove existing HCFC-22 refrigerant using one of the following procedures:

IMPORTANT — Some system configurations may contain higher than normal refrigerant charge due to either large internal coil volumes, and/or long line sets.

METHOD 1:

Us this method if the existing outdoor unit is not equipped with shut-off valves, or if the unit is not operational and you plan to use the existing HCFC-22 to flush the system.

Remove all HCFC-22 refrigerant from the existing system. Check gauges after shutdown to confirm that the entire system is completely void of refrigerant.

METHOD 2:

Use this method if the existing outdoor unit is equipped with manual shut-off valves, and you plan to use new HCFC-22 refrigerant to flush the system.

The following devices could prevent full system charge recovery into the outdoor unit:

- Outdoor unit's high or low-pressure switches (if applicable) when tripped can cycle the compressor **OFF**.
- Compressor can stop pumping due to tripped internal pressure relief valve.
- Compressor has internal vacuum protection that is designed to unload the scrolls (compressor stops pumping) when the pressure ratio meets a certain value or when the suction pressure is as high as 20 psig. (Compressor suction pressures should never be allowed to go into a vacuum. Prolonged operation at low suction pressures will result in overheating of the scrolls and permanent damage to the scroll tips, drive bearings and internal seals.)

Once the compressor can not pump down to a lower pressure due to one of the above system conditions, shut off the vapor valve. Turn OFF the main power to unit and use a recovery machine to recover any refrigerant left in the indoor coil and line set.

Perform the following task:

A Start the existing HCFC-22 system in the cooling mode and close the liquid line valve.

B Use the compressor to pump as much of the existing HCFC-22 refrigerant into the outdoor unit until the outdoor system is full. Turn the outdoor unit main power OFF and use a recovery machine to remove the remaining refrigerant from the system.

NOTE — It may be necessary to bypass the low pressure switches (if equipped) to ensure complete refrigerant evacuation.

C When the low side system pressures reach 0 psig, close the vapor line valve.

D Check gauges after shutdown to confirm that the valves are not allowing refrigerant to flow back into the low side of the system.

Unit Placement10

See *Unit Dimensions* on Page3 for sizing mounting slab, platforms or supports. Refer to Figure 7 for mandatory installation clearance requirements.

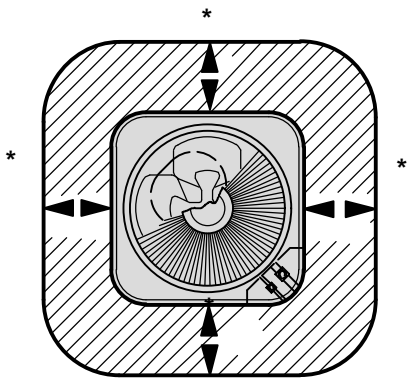

NOTES:

- Service panel access clearance of 30 in. (762 mm) must be maintained.
- Clearance to one of the other three sides must be 36 in. (914 mm).
- Clearance on one of the remaining two sides may be 12 in. (305 mm) and the final side may be 6 in. (152 mm).
- Clearance required on top of unit is 48 in. (1219 mm).
- A clearance of 24 in. (610 mm) must be maintained between two units.

Figure 7. Installation Clearances

POSITIONING CONSIDERATIONS

⚠ CAUTION

In order to avoid injury, take proper precaution when lifting heavy objects.

Consider the following when positioning the unit:

- Some localities are adopting sound ordinances based on the unit's sound level registered from the adjacent property, not from the installation property. Install the unit as far as possible from the property line.
- When possible, do not install the unit directly outside a window. Glass has a very high level of sound transmission. For proper placement of unit in relation to a window see the provided illustration in Figure 8.

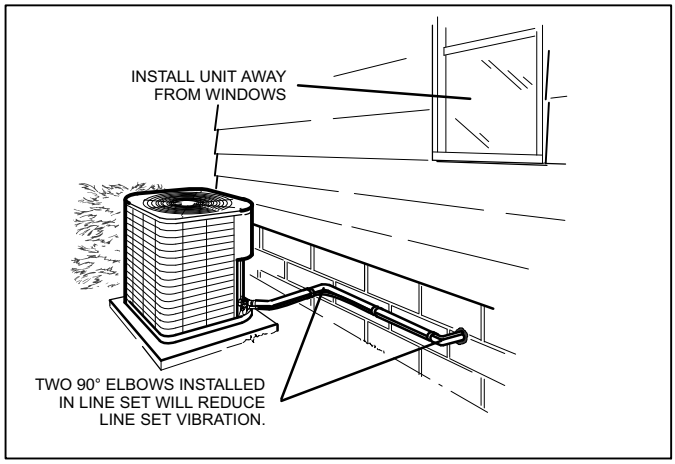

Figure 8. Outside Unit Placement

PLACING OUTDOOR UNIT ON SLAB

When installing a unit at grade level, the top of the slab should be high enough above the grade so that water from higher ground would not collect around the unit as illustrated in Figure 9.

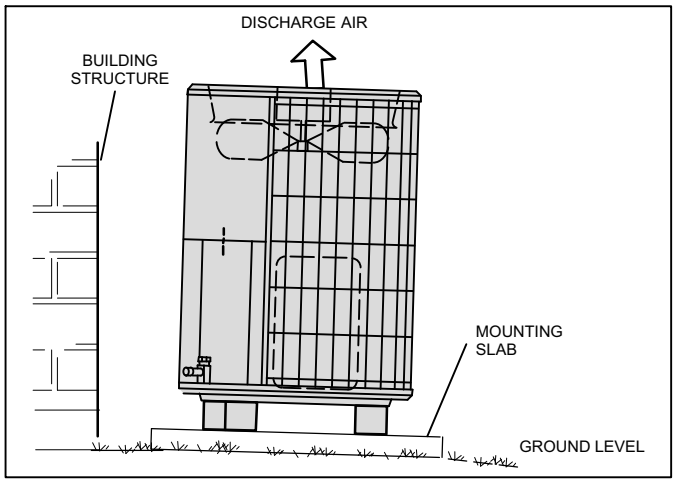

Figure 9. Typical Slab Mounting at Ground Level

Slab may be level or have a slope tolerance away from the building of not more than two degrees, or 2 inches per 5 feet (51 mm per 1524 mm) as illustrated in Figure 9.

INSTALLING OUTDOOR UNIT ON ROOF

Install the unit at a minimum of 4 inches (102 mm) above the surface of the roof. Ensure the weight of the unit is properly distributed over roof joists and rafters. Redwood or steel supports are recommended.

- When possible, do not install the unit directly outside a window. Glass has a very high level of sound transmission. For proper placement of unit in relation to a window see the provided illustration in Figure 8.

New or Replacement Line Set11

This section provides information on new installation or replacement of existing line set. If a new or replacement line set is not required, then proceed to *Brazing Connections* on Page 14.

If refrigerant lines are routed through a wall, seal and isolate the opening so vibration is not transmitted to the building. Pay close attention to line set isolation during installation of any HVAC system. When properly isolated from building structures (walls, ceilings. floors), the refrigerant lines will not create unnecessary vibration and subsequent sounds.

Also, consider the following when placing and installing a high-efficiency air conditioner:

REFRIGERANT LINE SET

Field refrigerant piping consists of liquid and suction lines from the outdoor unit (braze connections) to the indoor unit coil (flare or braze connections). Use Lennox L15 (braze, non-flare) series line set, or use field-fabricated refrigerant lines as listed in Table 2.

Table 2. Refrigerant Connections and Line Set Requirements

Model	Valve Field Connections and Recommended Line Set		
	Liquid Line	Suction Line	L15 Line Set
-024	3/8 in. (10 mm)	3/4 in. (19 mm)	L15 line set sizes are dependent on unit matchup. See Engineering Handbook to determine correct line set sizes.
-036 -048	3/8 in. (10 mm)	7/8 in. (22 mm)	
-060	3/8 in. (10 mm)	1-1/8 in. (29 mm)	Field Fabricated
NOTE — Some applications may required a field provided 7/8” to 1-1/8” adapter			

NOTE - When installing refrigerant lines longer than 50 feet, contact Lennox Technical Support Product Applications for assistance or Lennox piping manual. To obtain the correct information from Lennox, be sure to communicate the following points:

- Model (TPA*S4) and size of unit (e.g. -060).
- Line set diameters for the unit being installed as listed in Table 2 and total length of installation.
- Number of elbows and if there is a rise or drop of the piping.

LIQUID LINE FILTER DRIER12 INSTALLATION OR REPLACEMENT

The filter drier (one is shipped with each unit) must be field installed in the liquid line between the outdoor unit’s liquid line service valve and the indoor coil’s metering device (TXV) as illustrated in Figure 10. This filter drier must be installed to ensure a clean, moisture-free system. Failure to install the bi-flow filter drier will void the warranty. A replacement filter drier is available from Lennox. See *Brazing Connections* on Page 12 for special procedures on brazing filter drier connections to the liquid line.

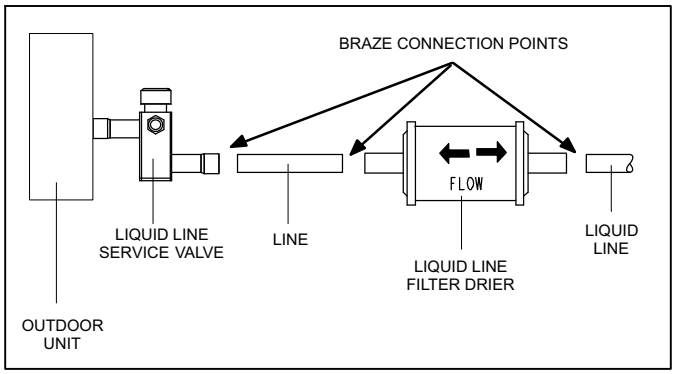

Figure 10. Typical Bi-Flow Liquid Line Filter Drier Installation

LINE SET ISOLATION

⚠ CAUTION

Brazing alloys and flux contain materials which are hazardous to your health.

Avoid breathing vapors or fumes from brazing operations. Perform operations only in well ventilated areas.

Wear gloves and protective goggles or face shield to protect against burns.

Wash hands with soap and water after handling brazing alloys and flux.

⚠ IMPORTANT

The Environmental Protection Agency (EPA) prohibits the intentional venting of HFC refrigerants during maintenance, service, repair and disposal of appliance. Approved methods of recovery, recycling or reclaiming must be followed.

⚠ IMPORTANT

If this unit is being matched with an approved line set or indoor unit coil which was previously charged with mineral oil, or if it is being matched with a coil which was manufactured before January of 1999, the coil and line set must be flushed prior to installation. Take care to empty all existing traps. Polyol ester (POE) oils are used in Lennox units charged with HFC-410A refrigerant. Residual mineral oil can act as an insulator, preventing proper heat transfer. It can also clog the expansion device, and reduce the system performance and capacity.
Failure to properly flush the system per the instructions below will void the warranty.

LINE SET

IMPORTANT — Refrigerant lines must not contact structure.

INSTALLATION

Line Set Isolation — The following illustrations are examples of proper refrigerant line set isolation:

REFRIGERANT LINE SET — TRANSITION FROM VERTICAL TO HORIZONTAL

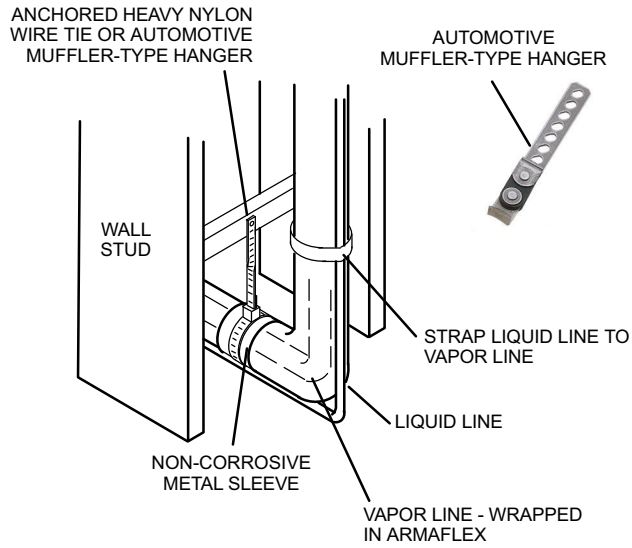

REFRIGERANT LINE SET — INSTALLING HORIZONTAL RUNS

To hang line set from joist or rafter, use either metal strapping material or anchored heavy nylon wire ties.

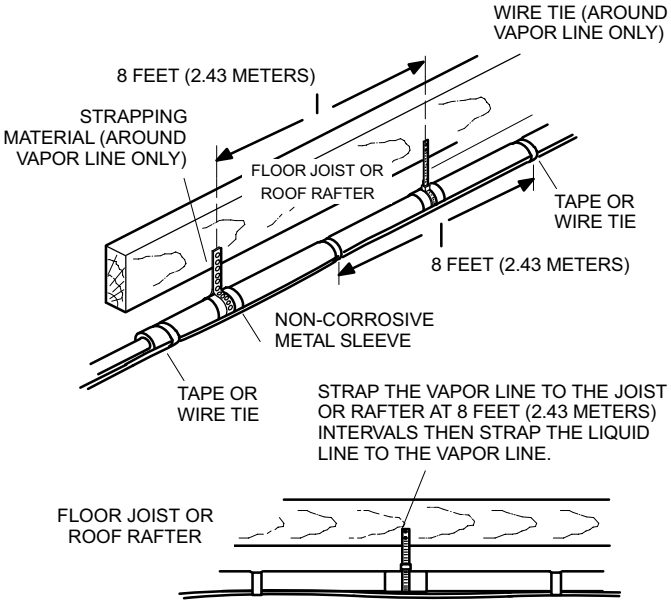

REFRIGERANT LINE SET — INSTALLING VERTICAL RUNS (NEW CONSTRUCTION SHOWN)

NOTE — Insulate liquid line when it is routed through areas where the surrounding ambient temperature could become higher than the temperature of the liquid line or when pressure drop is equal to or greater than 20 psig.

IMPORTANT — Refrigerant lines must not contact wall

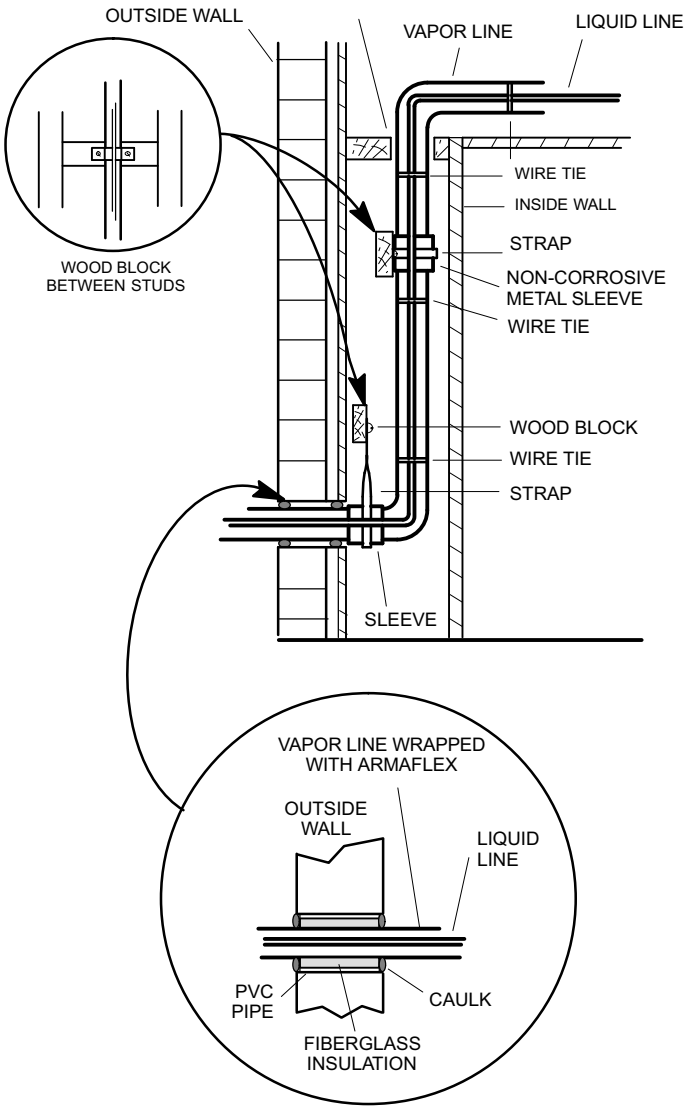

***NOTE** — Similar installation practices should be used if line set is to be installed on exterior of outside wall.*

WARNING — Polyol ester (POE) oils used with HFC-410A refrigerant absorb moisture very quickly. It is very important that the refrigerant system be kept closed as much as possible. DO NOT remove line set caps or service valve stub caps until you are ready to make connections.

Figure 11. Line Set Installation

BRAZING

NOTE - Use silver alloy brazing rods with five or six percent minimum silver alloy for copper-to-copper brazing, 45 percent alloy for copper-to-brass and copper-to-steel brazing.

CONNECTIONS13

1 CUT AND DEBUR

Cut ends of the refrigerant lines square (free from nicks or dents) and debur the ends. The pipe must remain round and do not pinch end of the line.

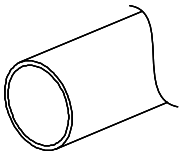

2 CAP AND CORE REMOVAL

Remove service cap and core from both the vapor and liquid line service ports.

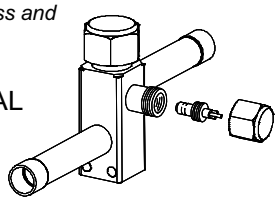

3 ATTACHED GAUGES

A Connect gauge set low pressure side to liquid line service valve.

B Connect gauge set center port to bottle of nitrogen with regulator.

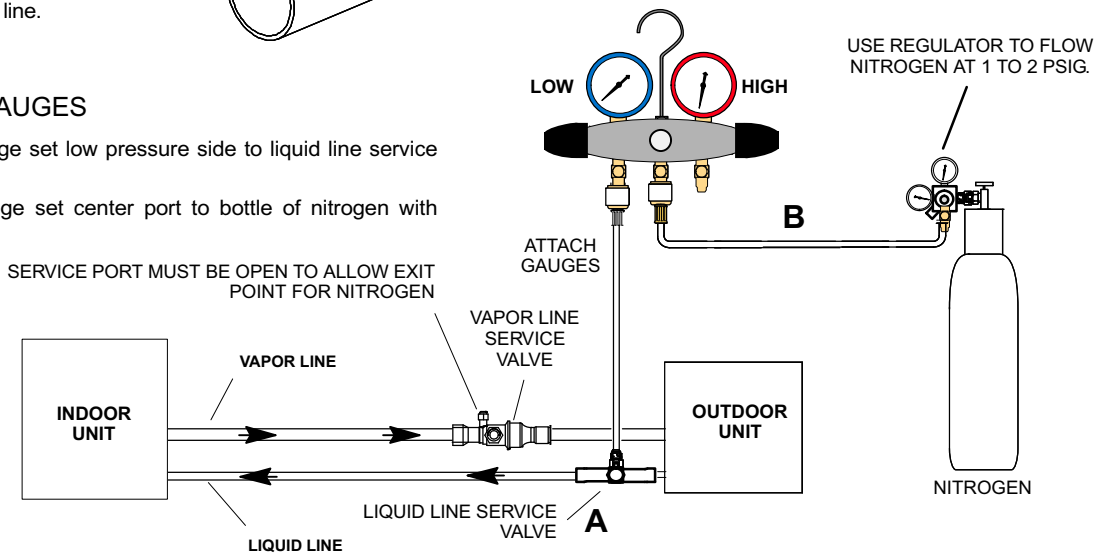

4 WRAP SERVICE VALVE

To protect components during brazing, wrap a wet cloth around the liquid line service valve body and copper tube stub and use another wet cloth underneath the valve body to protect the base paint.

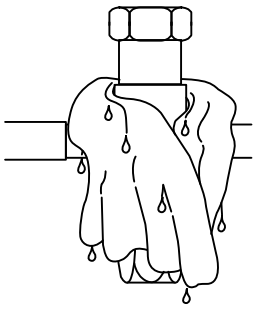

5 FLOW NITROGEN

Flow regulated nitrogen (at 1 to 2 psig) through the refrigeration gauge set into the valve stem port connection on the liquid line service valve and out of the valve stem port connection on the vapor service valve.

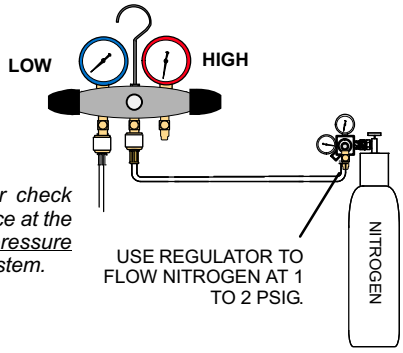

NOTE — The fixed orifice or check expansion valve metering device at the indoor unit will allow low pressure nitrogen to flow through the system.

6 BRAZE LINE SET

Braze the liquid line to the liquid line service valve. Turn off nitrogen flow.

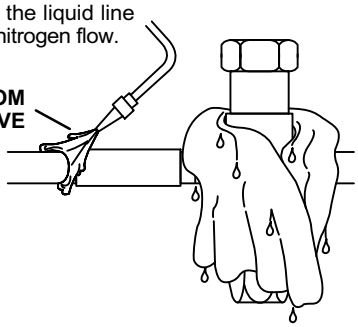

WARNING — Allow braze joint to cool before removing the wet rag from the service valve. (TEMPERATURES ABOVE 250ºF CAN DAMAGE VALVE SEALS

IMPORTANT — Connect gauge set low pressure side to vapor line service valve and repeat procedure starting at paragraph 4 for brazing the liquid line to service port valve.

7 INSTALL SERVICE PORT CAPS ONLY

After all connections have been brazed, disconnect manifold gauge set from service ports, cool down piping with wet rag and remove all wrappings. Do not reinstall cores until after evacuation procedure. Reinstall service port caps if desired to close off refrigerant ports.

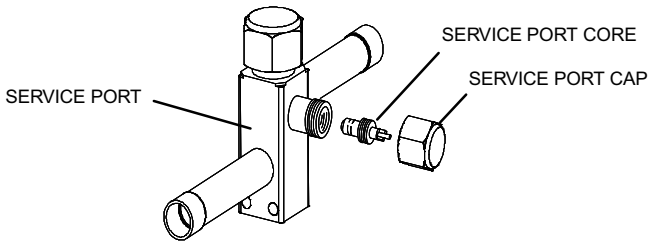

Figure 12. Brazing Connections

FLUSHING

LINE SET AND INDOOR COIL

1 TYPICAL FIXED ORIFICE REMOVAL

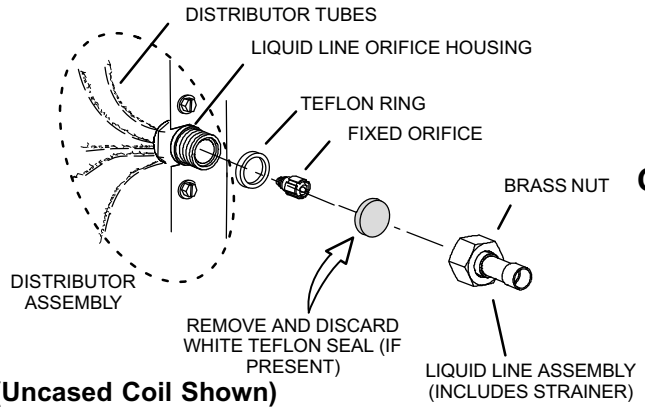

(Uncased Coil Shown)

A On fully cased coils, remove the coil access and plumbing panels.

B Remove any shipping clamps holding the liquid line and distributor assembly.

C Using two wrenches, disconnect liquid line from liquid line orifice housing. Take care not to twist or damage distributor tubes during this process.

D Remove and discard fixed orifice, valve stem assembly if present and Teflon washer as illustrated above.

E Use a field-provided fitting to temporary reconnect the liquid line to the indoor unit's liquid line orifice housing.

F Replace with expansion valve.

2 CONNECT GAUGES AND EQUIPMENT FOR FLUSHING PROCEDURE

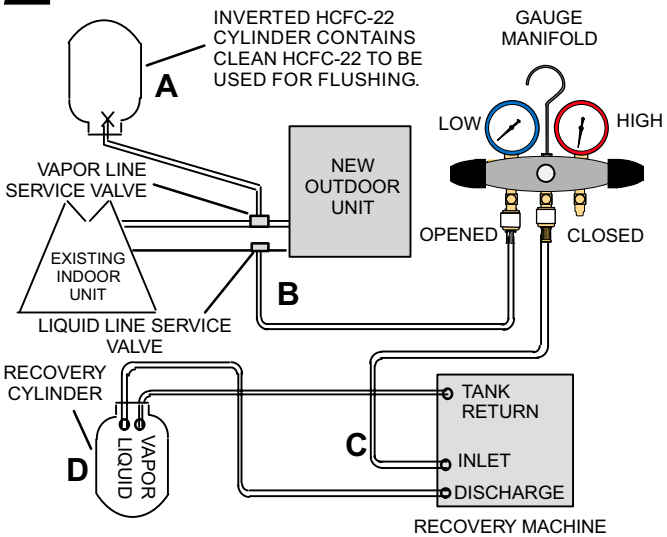

A Inverted HCFC-22 cylinder with clean refrigerant to the vapor service valve.

B HCFC-22 gauge set (low side) to the liquid line valve.

C HCFC-22 gauge set center port to inlet on the recovery machine with an empty recovery tank to the gauge set.

D Connect recovery tank to recovery machines per machine instructions.

OR

TYPICAL EXPANSION VALVE REMOVAL AND REPLACEMENT PROCEDURE

(Uncased Coil Shown)

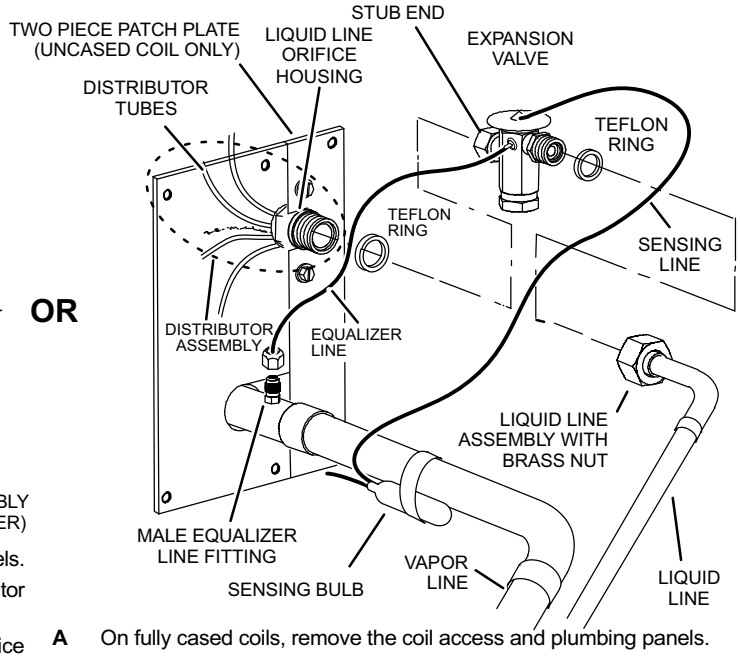

A On fully cased coils, remove the coil access and plumbing panels.

B Remove any shipping clamps holding the liquid line and distributor assembly.

C Disconnect the equalizer line from the expansion valve equalizer line fitting on the vapor line.

D Remove the vapor line sensing bulb.

E Disconnect the liquid line from the expansion valve at the liquid line assembly.

F Disconnect the expansion valve from the liquid line orifice housing. Take care not to twist or damage distributor tubes during this process.

G Remove and discard expansion valve and the two Teflon rings.

H Use a field-provided fitting to temporary reconnect the liquid line to the indoor unit's liquid line orifice housing.

I Reverse above order to install.

CAUTION — This procedure should not be performed on systems which contain contaminants (Example compressor burn out.

3 FLUSHING LINE SET

The line set and indoor unit coil must be flushed with at least the same amount of clean refrigerant that previously charged the system. Check the charge in the flushing cylinder before proceeding.

A Set the recovery machine for liquid recovery and start the recovery machine. Open the gauge set valves to allow the recovery machine to pull a vacuum on the existing system line set and indoor unit coil.

B Invert the cylinder of clean HCFC-22 and open its valve to allow liquid refrigerant to flow into the system through the vapor line valve. Allow the refrigerant to pass from the cylinder and through the line set and the indoor unit coil before it enters the recovery machine.

C After all of the liquid refrigerant has been recovered, switch the recovery machine to vapor recovery so that all of the HCFC-22 vapor is recovered. Allow the recovery machine to pull down to 0 the system.

D Close the valve on the inverted HCFC-22 drum and the gauge set valves. Pump the remaining refrigerant out of the recovery machine and turn the machine off.

LEAK TEST

LINE SET AND INDOOR COIL

NOTE — Normally, the high pressure hose is connected to the liquid line port. However, connecting it to the vapor port better protects the manifold gauge set from high pressure damage.

1 CONNECT GAUGE SET

A Connect an HFC-410A manifold gauge set high pressure hose to the vapor valve service port.

B With both manifold valves closed, connect the cylinder of HFC-410A refrigerant to the center port of the manifold gauge set.

NOTE — Later in the procedure, the HFC-410A container will be replaced by the nitrogen container.

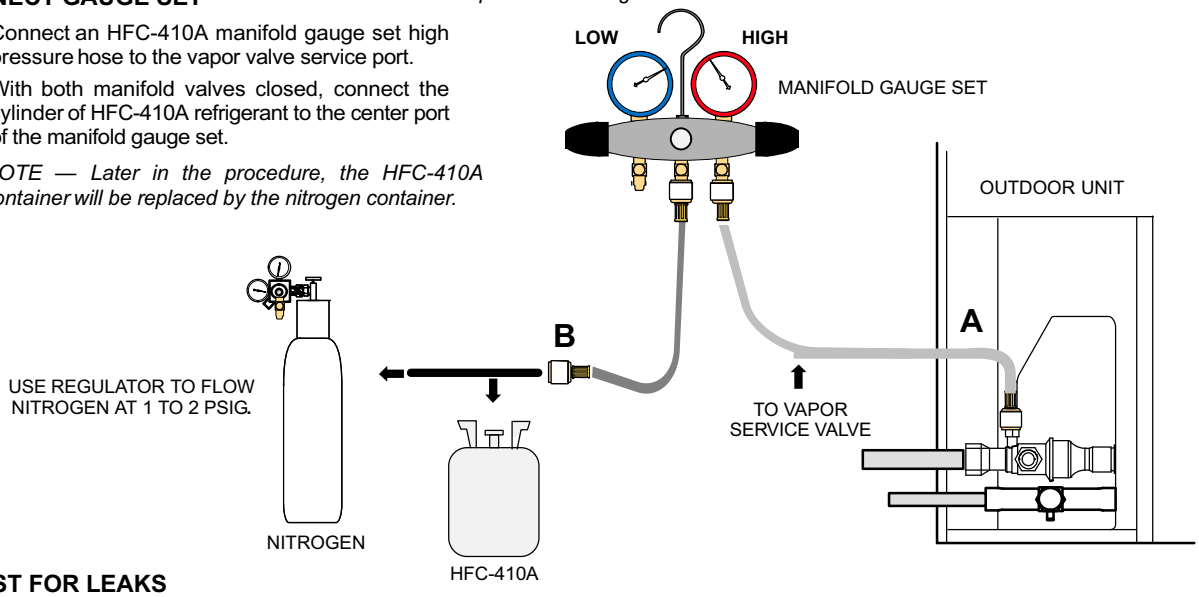

2 TEST FOR LEAKS

After the line set has been connected to the indoor unit and air conditioner, check the line set connections and indoor unit for leaks. Use the following procedure to test for leaks:

A With both manifold valves closed, connect the cylinder of HFC-410A refrigerant to the center port of the manifold gauge set. Open the valve on the HFC-410A cylinder (vapor only).

B Open the high pressure side of the manifold to allow HFC-410A into the line set and indoor unit. Weigh in a trace amount of HFC-410A. *[A trace amount is a maximum of two ounces (57 g) refrigerant or three pounds (31 kPa) pressure].* Close the valve on the HFC-410A cylinder and the valve on the high pressure side of the manifold gauge set. Disconnect the HFC-410A cylinder.

C Connect a cylinder of dry nitrogen with a pressure regulating valve to the center port of the manifold gauge set.

D Adjust dry nitrogen pressure to 150 psig (1034 kPa). Open the valve on the high side of the manifold gauge set in order to pressurize the line set and the indoor unit.

E After a few minutes, open one of the service valve ports and verify that the refrigerant added to the system earlier is measurable with a leak detector.

F After leak testing disconnect gauges from service ports.

⚠ WARNING

When using a high pressure gas such as dry nitrogen to pressurize a refrigeration or air conditioning system, use a regulator that can control the pressure down to 1 or 2 psig (6.9 to 13.8 kPa).

⚠ WARNING

Refrigerant can be harmful if it is inhaled. Refrigerant must be used and recovered responsibly.

Failure to follow this warning may result in personal injury or death.

⚠ WARNING

Fire, Explosion and Personal Safety Hazard.

Failure to follow this warning could result in damage, personal injury or death.

Never use oxygen to pressurize or purge refrigeration lines. Oxygen, when exposed to a spark or open flame, can cause damage by fire and/or an explosion, that could result in personal injury or death.

⚠ IMPORTANT

Leak detector must be capable of sensing HFC refrigerant.

EVACUATING

LINE SET AND INDOOR COIL

1 CONNECT GAUGE SET

NOTE — Remove cores from service valves (if not already done).

- **A** Connect low side of manifold gauge set with 1/4 SAE in-line tee to *vapor* line service valve
- **B** Connect high side of manifold gauge set to *liquid* line service valve
- **C** Connect micron gauge available connector on the 1/4 SAE in-line tee.
- **D** Connect the vacuum pump (with vacuum gauge) to the center port of the manifold gauge set. The center port line will be used later for both the HFC-410A and nitrogen containers.

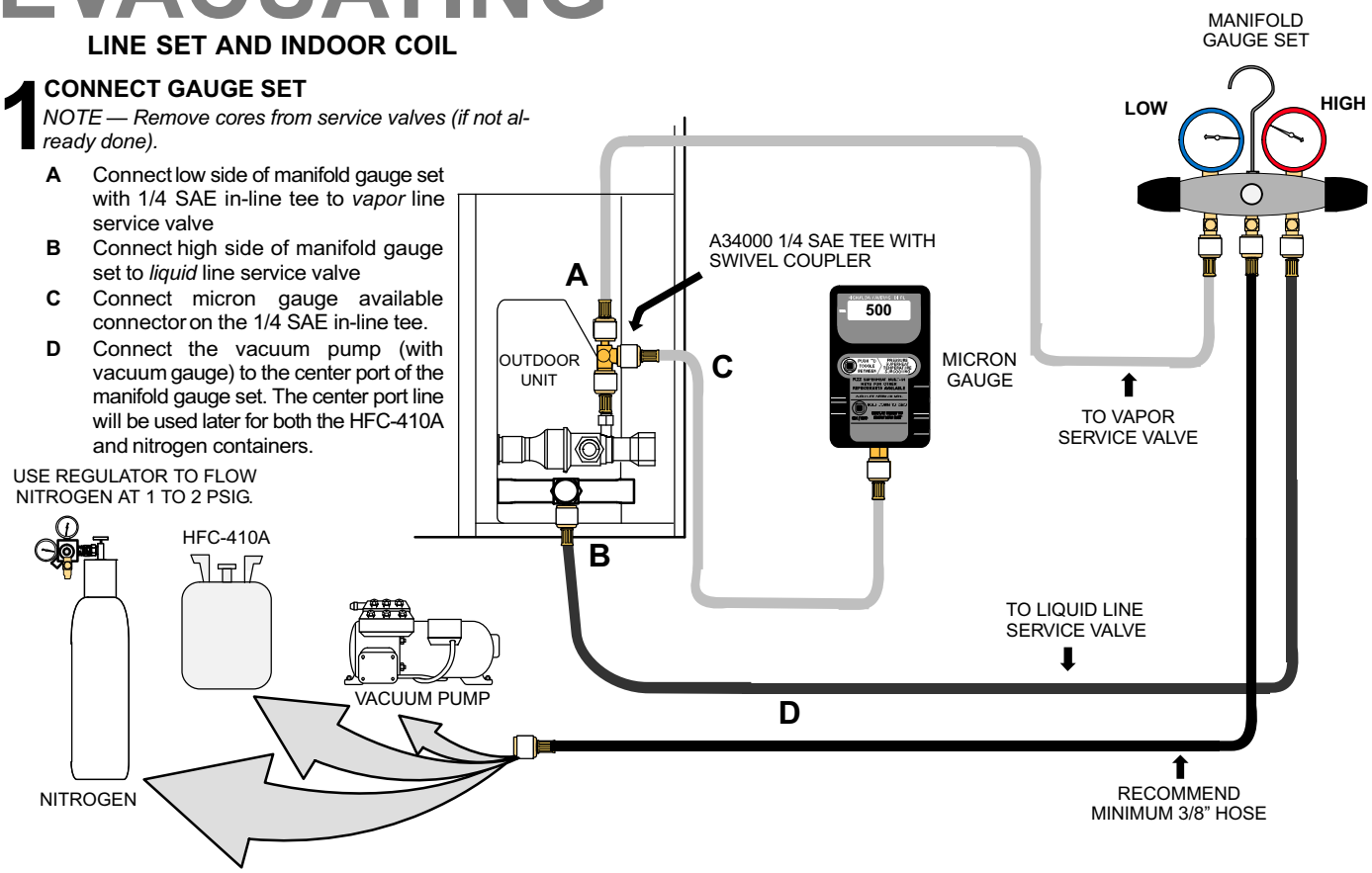

2 EVACUATE THE SYSTEM

- **A** Open both manifold valves and start the vacuum pump.
- **B** Evacuate the line set and indoor unit to an **absolute pressure** of 23,000 microns (29.01 inches of mercury).

*NOTE — During the early stages of evacuation, it is desirable to close the manifold gauge valve at least once. A rapid rise in pressure indicates a relatively large leak. If this occurs, **repeat the leak testing procedure**.*

*NOTE — The term **absolute pressure** means the total actual pressure within a given volume or system, above the absolute zero of pressure. Absolute pressure in a vacuum is equal to atmospheric pressure minus vacuum pressure.*

- **C** When the absolute pressure reaches 23,000 microns (29.01 inches of mercury), close the manifold gauge valves, turn off the vacuum pump and disconnect the manifold gauge center port hose from vacuum pump. Attach the manifold center port hose to a dry nitrogen cylinder with pressure regulator set to 150 psig (1034 kPa) and purge the hose. Open the manifold gauge valves to break the vacuum in the line set and indoor unit. Close the manifold gauge valves.
- **D** Shut off the dry nitrogen cylinder and remove the manifold gauge hose from the cylinder. Open the manifold gauge valves to release the dry nitrogen from the line set and indoor unit.
- **E** Reconnect the manifold gauge to the vacuum pump, turn the pump on, and continue to evacuate the line set and indoor unit until the absolute pressure does not rise above 500 microns (29.9 inches of mercury) within a 20-minute period after shutting off the vacuum pump and closing the manifold gauge valves.
- **F** When the absolute pressure requirement above has been met, disconnect the manifold hose from the vacuum pump and connect it to an upright cylinder of HFC-410A refrigerant. Open the manifold gauge valve 1 to 2 psig in order to release the vacuum in the line set and indoor unit.
- **G** Perform the following:
  - Close manifold gauge valves.
  - Shut off HFC-410A cylinder.
  - Reinstall service valve cores by removing manifold hose from service valve. Quickly install cores with core tool while maintaining a positive system pressure.
  - Replace the stem caps and secure finger tight, then tighten an additional one-sixth (1/6) of a turn as illustrated.

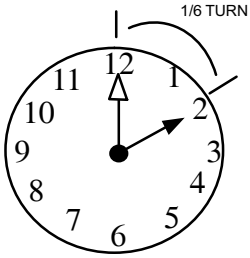

⚠ IMPORTANT

Use a thermocouple or thermistor electronic vacuum gauge that is calibrated in microns. Use an instrument capable of accurately measuring down to 50 microns.

⚠ WARNING

Danger of Equipment Damage. Avoid deep vacuum operation. Do not use compressors to evacuate a system. Extremely low vacuums can cause internal arcing and compressor failure. Damage caused by deep vacuum operation will void warranty.

Evacuating the system of non-condensables is critical for proper operation of the unit. Non-condensables are defined as any gas that will not condense under temperatures and pressures present during operation of an air conditioning system. Non-condensables and water suction combine with refrigerant to produce substances that corrode copper piping and compressor parts.

Electrical17

In the U.S.A., wiring must conform with current local codes and the current National Electric Code (NEC). In Canada, wiring must conform with current local codes and the current Canadian Electrical Code (CEC).

Refer to the furnace or air handler installation instructions for additional wiring application diagrams and refer to unit nameplate for minimum circuit ampacity and maximum overcurrent protection size.

24VAC TRANSFORMER

Use the transformer provided with the furnace or air handler for low-voltage control power (24VAC - 40 VA minimum)

SIZE CIRCUIT AND INSTALL DISCONNECT SWITCH

Refer to the unit nameplate for minimum circuit ampacity, and maximum fuse or circuit breaker (HACR per NEC). Install power wiring and properly sized disconnect switch.

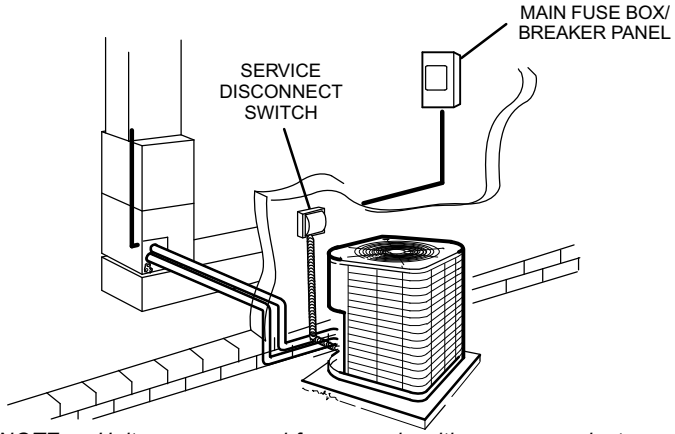

NOTE — Units are approved for use only with copper conductors. Ground unit at disconnect switch or to an earth ground.

INSTALL THERMOSTAT

Install room thermostat (ordered separately) on an inside wall approximately in the center of the conditioned area and 5 feet (1.5m) from the floor. It should not be installed on an outside wall or where it can be affected by sunlight or drafts.

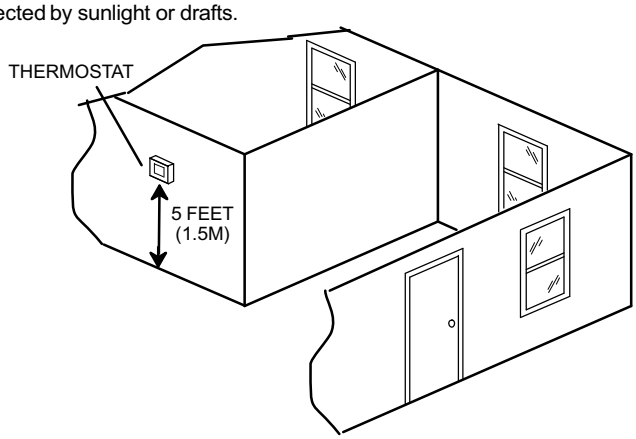

NOTE — 24VAC, Class II circuit connections are made in the control panel.

⚠ WARNING

Electric Shock Hazard. Can cause injury or death. Unit must be grounded in accordance with national and local codes.

Line voltage is present at all components when unit is not in operation on units with single-pole contactors. Disconnect all remote electric power supplies before opening access panel. Unit may have multiple power supplies.

ROUTING HIGH VOLTAGE/ GROUND AND CONTROL WIRING

HIGH VOLTAGE / GROUND WIRES

Any excess high voltage field wiring should be trimmed and secured away from any low voltage field wiring. To facilitate a conduit, a cutout is located in the bottom of the control panel. Connect conduit to the control panel using a proper conduit fitting.

CONTROL WIRING

Install low voltage wiring from outdoor to indoor unit and from thermostat to indoor unit as illustrated.

A Run 24VAC control wires through hole with grommet.

B Make 24VAC thermostat wire connections to CMC1.

NOTE — Do not bundle any excess 24VAC control wires inside control panel.

NOTE — For proper voltages, select thermostat wire (control wires) gauge per Table above.

WIRE RUN LENGTH	AWG#	INSULATION TYPE
LESS THAN 100' (30 METERS)	18	TEMPERATURE RATING
MORE THAN 100' (30 METERS)	16	35ºC MINIMUM.

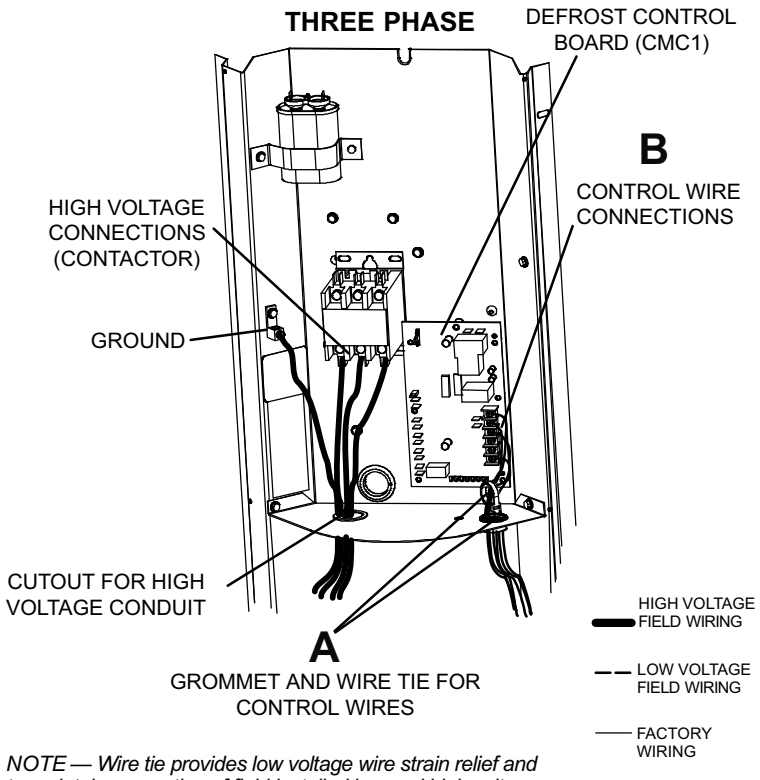

NOTE — Wire tie provides low voltage wire strain relief and to maintain separation of field installed low and high voltage circuits.

TYPICAL CONTROL WIRING

Low Voltage Wiring

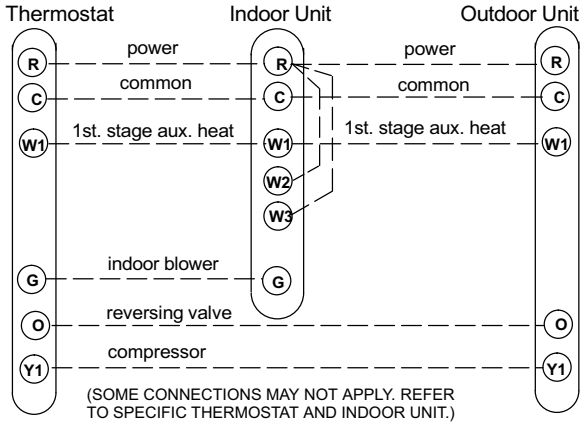

Low Voltage Wiring (with Auxiliary Heat)

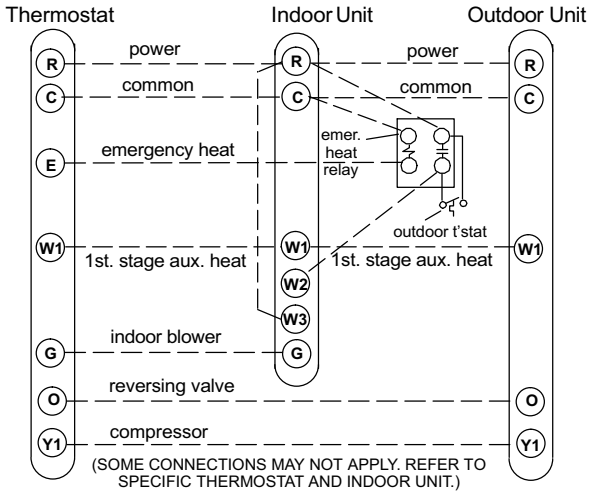

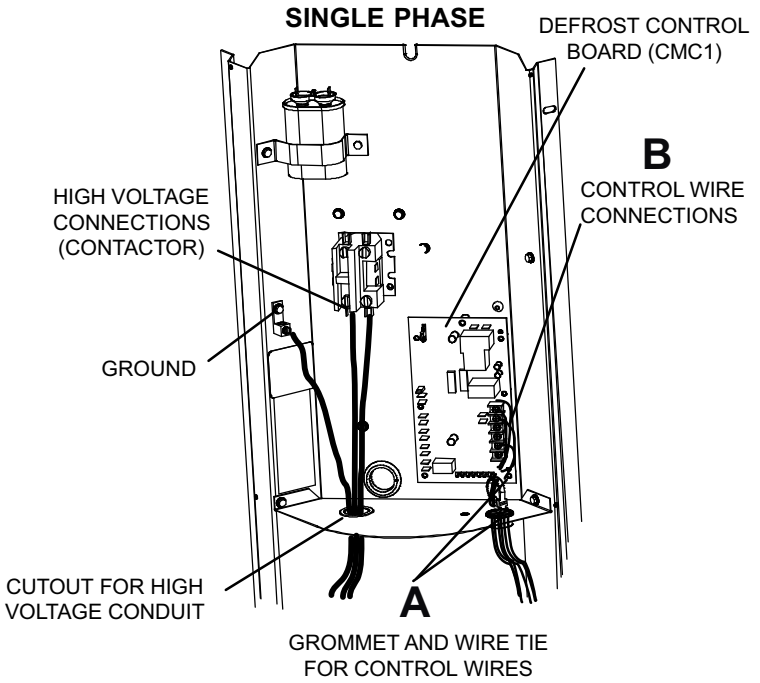

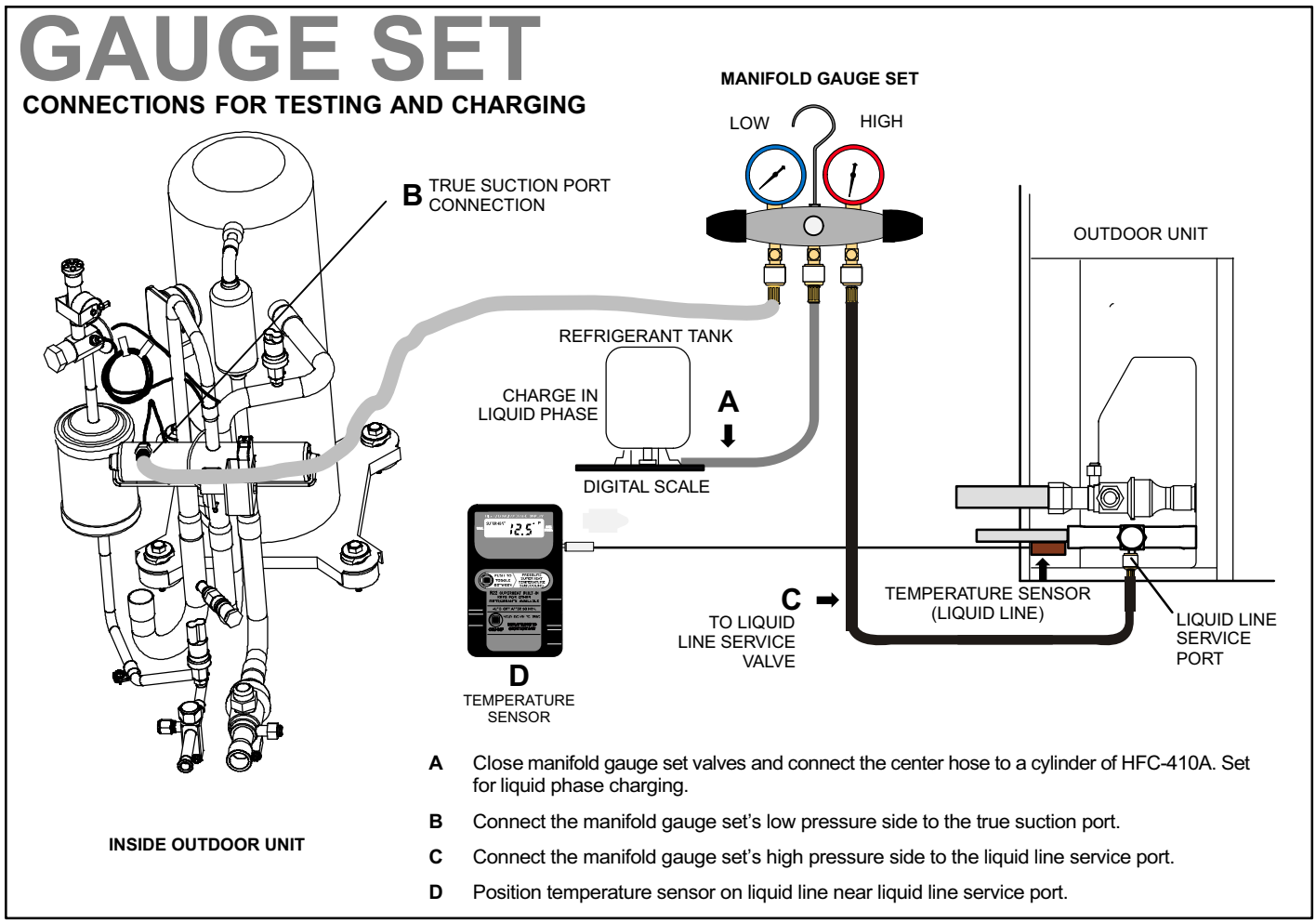

Figure 13. Gauge Set Setup and Connections

Servicing Units Void of Charge18

If the outdoor unit is void of refrigerant, clean the system using the procedure described below.

1. Leak check system using procedure outlined on Page 16.
2. Evacuate the system using procedure outlined on Page 17.
3. Use nitrogen to break the vacuum and install a new filter drier in the system.
4. Evacuate the system again using procedure outlined on Page 17.
5. Weigh in refrigerant using procedure outlined in Figure 15.

Unit Start-Up19

⚠ IMPORTANT

If unit is equipped with a crankcase heater, it should be energized 24 hours before unit start-up to prevent compressor damage as a result of slugging.

1. Rotate fan to check for binding.
2. Inspect all factory- and field-installed wiring for loose connections.
3. After evacuation is complete, open the liquid line and suction line service valves to release the refrigerant charge (contained in outdoor unit) into the system.
4. Replace the stem caps and tighten as specified in *Operating Service Valves* on Page 8.
5. Check voltage supply at the disconnect switch. The voltage must be within the range listed on the unit's nameplate. If not, do not start the equipment until you have consulted with the power company and the voltage condition has been corrected.
6. Set the thermostat for a cooling demand. Turn on power to the indoor indoor unit and close the outdoor unit disconnect switch to start the unit.
7. Recheck voltage while the unit is running. Power must be within range shown on the nameplate.
8. Check system for sufficient refrigerate by using the procedures listed under *Start-Up and Charging Procedures*.

System Refrigerant20

This section outlines procedures for:

1. Connecting gauge set for testing and charging;
2. Checking and adjusting indoor airflow;
3. Adding or removing refrigerant.

ADDING OR REMOVING REFRIGERANT

This system uses HFC-410A refrigerant which operates at much higher pressures than HCFC-22. The pre-installed liquid line filter drier is approved for use with HFC-410A only. Do not replace it with components designed for use with HCFC-22. This unit is NOT approved for use with coils which use capillary tubes or fixed orifices as a refrigerant metering device.

Check airflow using the Delta-T (DT) process using the illustration in Figure 14.

AIRFLOW

INDOOR COIL

Temperature of air entering indoor coil ºF (Dry-bulb)	DT													
80	24	24	24	23	23	22	22	22	20	19	18	17	16	15
78	23	23	23	22	22	21	21	20	19	18	17	16	15	14
76	22	22	22	21	21	20	19	19	18	17	16	15	14	13
74	21	21	21	20	19	19	18	17	16	16	15	14	13	12
72	20	20	19	18	17	17	16	15	15	14	13	12	11	10
70	19	19	18	18	17	17	16	15	15	14	13	12	11	10
Wet-bulb ºF	**57**	**58**	**59**	**60**	**61**	**62**	**63**	**64**	**65**	**66**	**67**	**68**	**69**	**70**

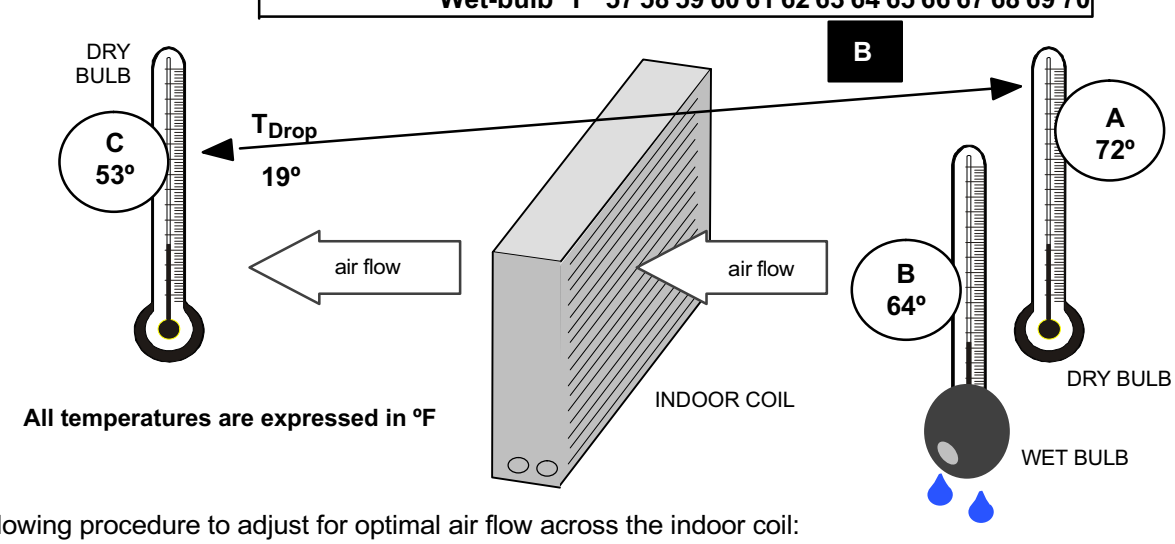

Use the following procedure to adjust for optimal air flow across the indoor coil:

1. **Determine the desired DT** — Measure entering air temperature using dry bulb (**A**) and wet bulb (**B**). **DT** is the intersecting value of **A** and **B** in the Table (see triangle).
2. **Find temperature drop across coil** — Measure the coil's dry bulb entering and leaving air temperatures (**A** and **C**). Temperature Drop Formula: (T_{Drop}) = **A** minus **C**.
3. **Determine if fan needs adjustment** — If the difference between the measured T_{Drop} and the desired **DT** (T_{Drop}–**DT**) is within ±3º, no adjustment is needed. See example below:

> Assume **DT** = 15 and **A** temp. = 72º, these **C** temperatures would necessitate stated actions:

Cº	T_{Drop}	–	DT	=	ºF	*ACTION*
53º	19	–	15	=	4	*Increase the airflow*
58º	14	–	15	=	-1	*(within ±3º range) no change*
62º	10	–	15	=	-5	*Decrease the airflow*

Changing air flow affects all temperatures; recheck temperatures to confirm that the temperature drop and DT are within ±3º.

4. **Adjust the fan speed** — See indoor unit instructions to increase/decrease fan speed.

Figure 14. Checking Indoor Airflow over Evaporator Coil using Delta-T Chart

Use **WEIGH IN** method for adding initial refrigerant charge, and then use **SUBCOOLING** method for verifying refrigerant charge.

WEIGH IN

CHARGING METHOD

CALCULATING SYSTEM CHARGE FOR OUTDOOR UNIT VOID OF CHARGE

If the system is void of refrigerant, first, locate and repair any leaks and then weigh in the refrigerant charge into the unit. To calculate the total refrigerant charge:

Amount specified on nameplate		Adjust amount. for variation in line set length listed on line set length table below.		Total charge
_____	±	_____	=	_____

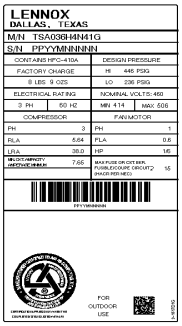

Refrigerant Charge per Line Set Length

Liquid Line Set Diameter	Ounces per 5 feet (g per 1.5 m) adjust from 15 feet (4.6 m) line set*
3/8” (9.5 mm)	3 ounce per 5’ (85 g per 1.5 m)

*If line length is greater than 15 ft. (4.6 m), add this amount. If line length is less than 15 ft. (4.6 m), subtract this amount.

NOTE — Insulate liquid line when it is routed through areas where the surrounding ambient temperature could become higher than the temperature of the liquid line or when pressure drop is equal to or greater than 20 psig.

NOTE — The above nameplate is for illustration purposes only. Go to actual nameplate on outdoor unit for charge information.

Figure 15. Using Weigh In Method

SUBCOOLING

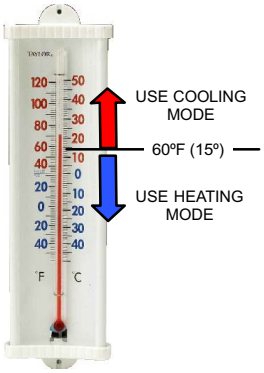

SATº _____

LIQº – _____

SCº = _____

1 Check the airflow as illustrated in Figure 14 to be sure the indoor airflow is as required. (Make any air flow adjustments before continuing with the following procedure.)

2 Measure outdoor ambient temperature; determine whether to use **cooling mode** or **heating mode** to check charge.

3 Connect gauge set.

4 Check Liquid and Vapor line pressures. Compare pressures with Normal Operating Pressures in either Table 5 or 6, (*The reference table is a general guide. Expect minor pressure variations. Significant differences may mean improper charge or other system problem.*)

5 Set thermostat for heat/cool demand, depending on mode being used:

Using cooling mode—When the outdoor ambient temperature is 60°F (15°C) and above. Target subcooling values in table below are based on 70 to 80°F (21-27°C) indoor return air temperature; if necessary, operate heating to reach that temperature range; then set thermostat to cooling mode setpoint to 68ºF (20ºC). When pressures have stabilized, continue with step 6.

Using heating mode—When the outdoor ambient temperature is below 60°F (15°C). Target subcooling values in table below are based on 65-75°F (18-24°C) indoor return air temperature; if necessary, operate cooling to reach that temperature range; then set thermostat to heating mode setpoint to 77ºF (25ºC). When pressures have stabilized, continue with step 6.

6 Read the liquid line temperature; record in the LIQº space.

7 Read the liquid line pressure; then find its corresponding temperature in the temperature/ pressure chart listed in Table 7 and record it in the SATº space.

8 Subtract LIQº temp. from SATº temperature to determine subcooling; record it in SCº space.

9 Compare SCº results with either Table 3 or 4, being sure to note any additional charge for line set and/or match-up.

10 If subcooling value is greater than shown in the below table for the applicable unit size, remove refrigerant; if less than shown, add refrigerant.

11 If refrigerant is added or removed, repeat steps 6 through 10 to verify charge.

Figure 16. Using Subcooling Method

Table 3. Subcooling (SC) Values —TXV System - ºF (ºC) +1ºF (0.5ºC)

T Voltage — 220/240VAC, 1-Phase, 50 Hertz			
°F(°C)*	-024	-036	-048
Cooling			
65 (18)	19	6	11
75 (24)	19	7	12
85 (29)	19	8	12
95 (35)	20	9	13
105 (41)	20	9	13
115 (45)	20	9	13
Heating			
60 (15)	8	8	6
50 (10)	8	8	6
40 (4)	8	8	6
30 (-1)	8	8	6
10 (-7)	8	8	6
*Temperature of the air entering the outside coil.			

Table 4. Subcooling (SC) Values — TXV System - ºF (ºC) +1ºF (0.5ºC)

M Voltage — 380/420VAC, 3-Phase, 50 Hertz			
°F(°C)*	-036	-048	-060
Cooling			
65 (18)	6	11	12
75 (24)	7	12	13
85 (29)	8	12	14
95 (35)	9	13	15
105 (41)	9	13	15
115 (45)	9	13	15
Heating			
60 (15)	8	6	9
50 (10)	8	6	9
40 (4)	8	6	9
30 (-1)	8	6	9
10 (-7)	8	6	9
*Temperature of the air entering the outside coil.			

⚠ IMPORTANT

Use this Table to perform maintenance checks; it is not a procedure for charging the system. Minor variations in these pressures may be due to differences in installations. Significant deviations could mean that the system is not properly charged or that a problem exists with some component in the system.

Table 5. Normal Operating Pressures — Liquid ±10 and Vapor ±5 Psig (1 Phase)

T Voltage — 220/240VAC, 1-Phase, 50 Hertz			
	-024	-036	-048
Cooling			
°F(°C)*	Liquid / Vapor	Liquid / Vapor	Liquid / Vapor
65 (18)	268 / 129	268 / 141	247 / 138
75 (24)	311 / 133	309 / 143	286 / 141
85 (29)	358 / 136	354 / 146	330 / 143
95 (35)	410 / 140	402 / 149	377 / 146
105 (41)	468 / 144	456 / 152	429 / 149
115 (45)	531 / 148	513 / 155	486 / 151
Heating			
60 (15)	422 / 125	414 / 125	421 / 130
50 (10)	398 / 107	393 / 107	400 / 111
40 (4)	376 / 90	374 / 91	382 / 93
30 (-1)	354 / 75	357 / 77	364 / 78
10 (-7)	334 / 61	340 / 64	347 / 64
*Temperature of the air entering the outside coil.			

Table 6. Normal Operating Pressures — Liquid ±10 and Vapor ±5 Psig (3 Phase)

M Voltage — 380/420VAC, 3-Phase, 50 Hertz			
	-036	-048	-060
Cooling			
°F(°C)*	Liquid / Vapor	Liquid / Vapor	Liquid / Vapor
65 (18)	266 / 141	246 / 139	259 / 133
75 (24)	307 / 144	285 / 141	299 / 135
85 (29)	352 / 147	329 / 144	345 / 137
95 (35)	401 / 149	376 / 146	394 / 140
105 (41)	454 / 152	429 / 149	448 / 144
115 (45)	511 / 155	486 / 152	506 / 147
Heating			
60 (15)	412 / 125	418 / 130	443 / 126
50 (10)	393 / 107	397 / 111	420 / 107
40 (4)	376 / 90	377 / 94	398 / 91
30 (-1)	360 / 76	360 / 78	379 / 76
10 (-7)	345 / 63	343 / 65	362 / 63
*Temperature of the air entering the outside coil.			

Table 7. HFC-410A Temp. (°F) - Pressure (Psig)

°F	°C	Psig	°F	°C	Psig
-40	-40.0	11.6	**60**	15.6	170
-35	-37.2	14.9	**65**	18.3	185
-30	-34.4	18.5	**70**	21.1	201
-25	-31.7	22.5	**75**	23.9	217
-20	-28.9	26.9	**80**	26.7	235
-15	-26.1	31.7	**85**	29.4	254
-10	-23.3	36.8	**90**	32.2	274
-5	-20.6	42.5	**95**	35.0	295
0	-17.8	48.6	**100**	37.8	317
5	-15.0	55.2	**105**	40.6	340
10	-12.2	62.3	**110**	43.3	365
15	-9.4	70.0	**115**	46.1	391
20	-6.7	78.3	**120**	48.9	418
25	-3.9	87.3	**125**	51.7	446
30	-1.1	96.8	**130**	54.4	476
35	1.7	107	**135**	57.2	507
40	4.4	118	**140**	60.0	539
45	7.2	130	**145**	62.8	573
50	10.0	142	**150**	65.6	608
55	12.8	155			

System Operation21

The outdoor unit and indoor blower cycle on demand from the room thermostat. If the thermostat blower switch is in the **ON** position, the indoor blower operates continuously.

Filter Drier

The unit is equipped with a large-capacity biflow filter drier which keeps the system clean and dry. If replacement is necessary, order another of the same design and capacity. The replacement filter drier must be suitable for use with HFC-410A refrigerant.

Low Pressure Switch

The is equipped with an auto-reset low pressure switch which is located on the vapor line. The switch shuts off the compressor when the vapor pressure falls below the factory setting. This switch, which is ignored during defrost operation, closes at pressures at or above 40 psig and opens at 25 psig. It is not adjustable.

High Pressure Switch

The is equipped with a manual-reset high pressure switch (single-pole, single-throw) which is located on the liquid line. The switch shuts off the compressor when discharge pressure rises above the factory setting. The switch is normally closed and is permanently adjusted to trip (open) at 590 ± 10 psig (4412 ± 69 kPa).

NOTE — A Schrader core is under the pressure switches.

Defrost System22

The defrost system includes a defrost thermostat and a defrost control.

Defrost Thermostat

The defrost thermostat is located on the liquid line between the check/expansion valve and the distributor. When the defrost thermostat senses 42°F (5.5°C) or cooler, its contacts close and send a signal to the defrost control board to start the defrost timing. It also terminates defrost when the liquid line warms up to 70°F (21°C).

Defrost Control

The defrost control board includes the combined functions of a time/temperature defrost control, defrost relay, time delay, diagnostic LEDs, and a terminal strip for field wiring connections.

The control provides automatic switching from normal heating operation to defrost mode and back. During compressor cycle (defrost thermostat is closed, calling for defrost), the control accumulates compressor run times at 30, 60, or 90 minute field adjustable intervals. If the defrost thermostat is closed when the selected compressor run time interval ends, the defrost relay is energized and defrost begins.

Defrost Control Timing Pins (P1)

Each timing pin selection provides a different accumulated compressor run time period for one defrost cycle. This time period must occur before a defrost cycle is initiated. The defrost interval can be adjusted to 30 (T1), 60 (T2), or 90 (T3) minutes (see figure 20). The maximum defrost period is 14 minutes and cannot be adjusted.

NOTE - Defrost control part number is listed near the P1 timing pins.

- Units with defrost control 100269-03: Factory default is 60 minutes
- Units with defrost control 100269-05: Factory default is 90 minutes

If the timing selector jumper is missing, the defrost control defaults to a 90-minute defrost interval.

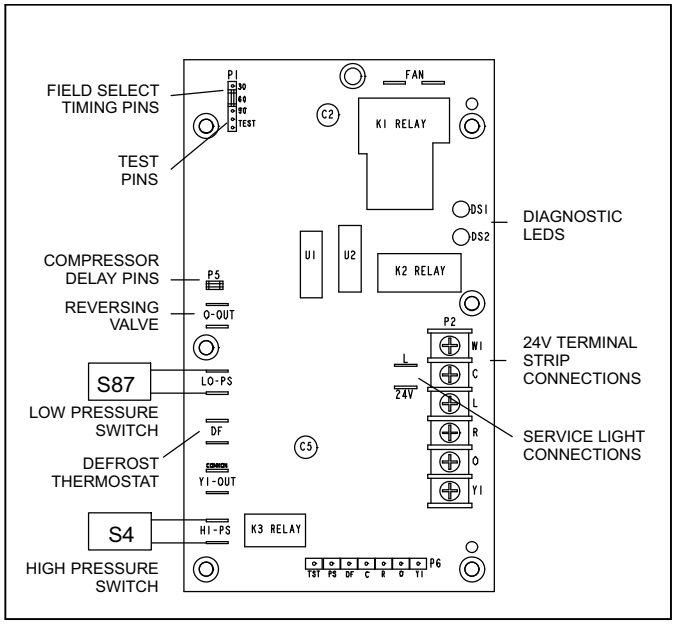

Figure 17. Outdoor Unit Defrost Control Board

Compressor Delay

The defrost control has a field-selectable function to reduce occasional sounds that may occur while the unit is cycling in and out of the defrost mode.

- Units with defrost control 100269-03: The compressor will be cycled off for 30 seconds going in and out of the defrost mode when the compressor delay jumper is removed.
- Units with defrost control 100269-05: The compressor will be cycled off for 30 seconds going in and out of the defrost mode when the compressor delay jumper is installed.

NOTE — The 30-second compressor feature is ignored when TEST pins are jumped.

Test Mode

A TEST option is provided for troubleshooting. See Figure 18 for this function.

Time Delay

The timed-off delay is five minutes long. The delay helps protect the compressor from short-cycling in case the power to the unit is interrupted or a pressure switch opens. The delay is bypassed by placing the timer select jumper across the TEST pins for 0.5 seconds.

NOTE — The board must have a thermostat demand for the bypass function.

Diagnostic LEDs

The defrost board uses two LEDs for diagnostics. The LEDs flash a specific sequence according to the diagnosis. See Table 8.

Table 8. Defrost Control Board Diagnostic LEDs

DS2 Green	DS1 Red	Condition
OFF	OFF	Power problem
Simultaneous Slow Flash		Normal operation
Alternating Slow Flash		5-minute anti-short cycle delay
Fault and Lockout Codes		
OFF	Slow Flash	Low Pressure Fault
OFF	ON	Low Pressure Lockout
Slow Flash	OFF	High Pressure Fault
ON	OFF	High Pressure Lockout

Pressure Switch Circuits

The defrost control includes two pressure switch circuits. The factory-installed high pressure switch (S4) wires are connected to the board's HI PS terminals (Figure 17). The board also includes LO PS terminals to accommodate a field-provided low (or loss-of-charge) pressure switch.

During a single thermostat cycle, the defrost control will lock out the unit after the fifth time that the circuit is interrupted by any pressure switch that is wired to the control board. In addition, the diagnostic LEDs will indicate a pressure switch lockout after the fifth occurrence of an open pressure switch (see Table 8). The unit will remain locked out until power is broken then remade to the control or until the jumper is applied to the TEST pins for 0.5 seconds.

NOTE — The defrost control board ignores input from the low pressure switch terminals during the TEST mode, during the defrost cycle, during the 90-second start-up period, and for the first 90 seconds each time the reversing valve switches heat/cool modes. ***If the TEST pins are jumpered and the 5-minute delay is being bypassed, the LO PS terminal signal is not ignored during the 90-second start-up period.***

Service Light Connection

The defrost control board includes terminal connections for a service light which provides a signal that activates the room thermostat service light during periods of inefficient operation.

⚠ IMPORTANT

NOTE - After testing has been completed, properly re-position test jumper across desired timing pins.

TEST

Placing the jumper on the field test pins allows the technician to:

- Clear short cycle lockout
- Clear five-strike fault lockout
- Cycle the unit in and out of defrost mode
- Place the unit in defrost mode to clear the coil

When **Y1** is energized and 24V power is being applied to the Control, a test cycle can be initiated by placing a jumper on the Control's **TEST** pins for 2 to 5 seconds. If the jumper remains on the **TEST** pins for longer than five seconds, the Control will ignore the jumpered TEST pins and revert to normal operation.

The Control will initiate one test event each time a jumper is placed on the TEST pins. For each TEST the jumper must be removed for at least one second and then reapplied.

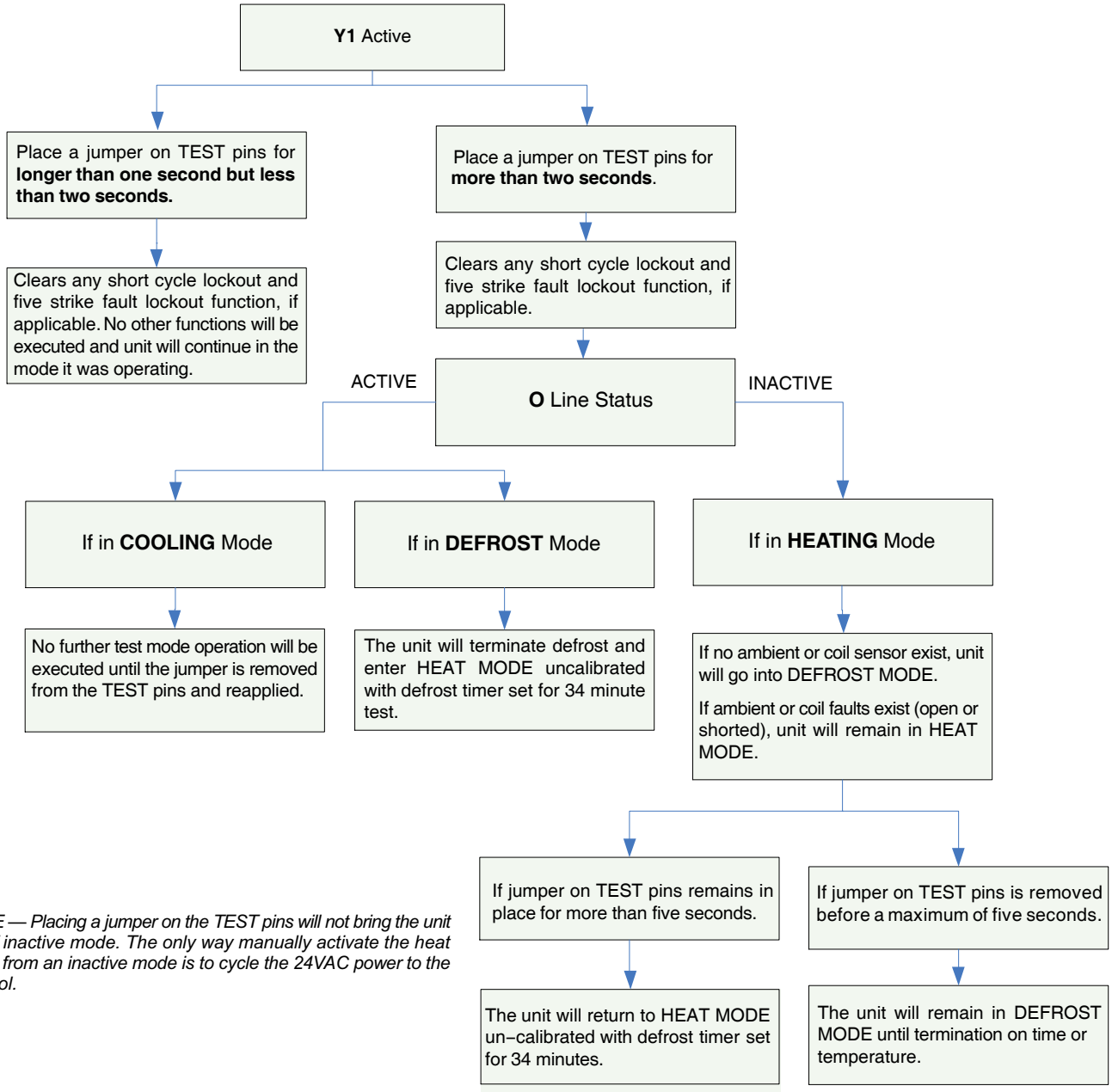

NOTE — Placing a jumper on the TEST pins will not bring the unit out of inactive mode. The only way manually activate the heat pump from an inactive mode is to cycle the 24VAC power to the Control.

Figure 18. Test Mode

Maintenance23

DEALER

⚠ WARNING

Electric shock hazard. Can cause injury or death. Before attempting to perform any service or maintenance, turn the electrical power to unit OFF at disconnect switch(es). Unit may have multiple power supplies.

⚠ WARNING

Improper installation, adjustment, alteration, service or maintenance can cause personal injury, loss of life, or damage to property.

Installation and service must be performed by a licensed professional installer (or equivalent) or a service agency.

Maintenance and service must be performed by a qualified installer or service agency. At the beginning of each cooling season, the system should be checked as follows:

Outdoor Unit

1. Outdoor unit fan motor is pre-lubricated and sealed. No further lubrication is needed.
2. Visually inspect all connecting lines, joints and coils for evidence of oil leaks.
3. Check all wiring for loose connections.
4. Check for correct voltage at unit (unit operating).
5. Check amp draw on outdoor fan motor.

   Motor Nameplate:_____ **Actual**:_____.
6. Inspect drain holes in coil compartment base and clean if necessary.

NOTE - If insufficient heating or cooling occurs, the unit should be gauged and refrigerant charge should be checked.

Outdoor Coil

Clean and inspect outdoor coil (may be flushed with a water hose). Ensure power is off before cleaning.

NOTE — It may be necessary to flush the outdoor coil more frequently if it is exposed to substances which are corrosive or which block airflow across the coil (e.g., pet urine, cottonwood seeds, fertilizers, fluids that may contain high levels of corrosive chemicals such as salts)

Sea Coast — Moist air in ocean locations can carry salt, which is corrosive to most metal. Units that are located near the ocean require frequent inspections and maintenance. These inspections will determine the necessary need to wash the unit including the outdoor coil. Consult your installing contractor for proper intervals/procedures for your geographic area or service contract.

Indoor Unit

1. Clean or change filters.
2. Lennox blower motors are prelubricated and permanently sealed. No more lubrication is needed.
3. Adjust blower speed for cooling. Measure the pressure drop over the coil to determine the correct blower CFM. Refer to the unit information service manual for pressure drop tables and procedure.
4. *Belt Drive Blowers* - Check belt for wear and proper tension.
5. Check all wiring for loose connections.
6. Check for correct voltage at unit. (blower operating)
7. Check amp draw on blower motor.

   Motor Nameplate:_____ **Actual**:_____.

Indoor Coil

1. Clean coil if necessary.
2. Check connecting lines, joints and coil for evidence of oil leaks.
3. Check condensate line and clean if necessary.

Checklists24

Field Operational Checklist25

Unit Readings	Cooling***			Heating***		
	Y1 First Stage	Expected results during Y2 demand (Toggle switch On)	Y2 Second Stage	Y1 First Stage	Expected results during Y2 demand (Toggle switch On)	Y2 Second Stage
Compressor						
Voltage		Same			Same	
Amperage		Higher			Higher	
Condenser Fan motor						
Amperage		Same or Higher			Same or Higher	
Temperature						
Ambient		Same			Same	
Outdoor Coil Discharge Air		Higher			Lower	
Compressor Discharge Line		Higher			Higher	
Indoor Return Air		Same			Same	
Indoor Coil Discharge Air		Lower			Higher	
Pressures						
Suction (Vapor)		Lower			Down	
Liquid		Higher			Higher	

Note - Heat pump may have a low ambient control or Control that locks in second-stage below its set point. It may be necessary to remove a wire from the control when performing this check out.

** On the units, the System Operation Monitor controls the second-stage solenoid coil in compressor.

*** Cooling Mode Operation - Block outdoor coil to maintain a minimum of 375 psig during testing.
Heating Mode Operation - Block indoor coil to maintain a minimum of 375 psig during testing.

Start-Up and Performance Checklist26

Customer _____ Address _____

Indoor Unit Model _____ Serial _____

Outdoor Unit Model _____ Serial _____

Solar Module Mfg and Model _____ Serial _____

Notes: _____

_____

START-UP CHECKS

Refrigerant Type: ___

Rated Load Amps __ Actual Amps _____ Rated Volts _____ Actual Volts _____

Condenser Fan Full Load Amps _____ Actual Amps: _____

COOLING MODE

Vapor Pressure: ___ Liquid Pressure: _____

Supply Air Temperature: _____ Ambient Temperature: _____ Return Air Temperature: _____

HEATING MODE

Vapor Pressure: ___ Liquid Pressure: _____

Supply Air Temperature: _____ Ambient Temperature: _____ Return Air Temperature: _____

System Refrigerant Charge (Refer to manufacturer's information on unit or installation instructions for required subcooling and approach temperatures.)

Subcooling: Saturated Condensing Temperature (A) *minus* Liquid Line Temperature (B)	A	—	B	=	SUBCOOLING
Approach: Liquid Line Temperature (A) *minus* Outdoor Air Temperature (B)	A	—	B	=	APPROACH
Indoor Coil Temp. Drop (18 to 22°F) Return Air Temperature (A) *minus* Supply Air Temperature (B)	A	—	B	=	COIL TEMP DROP

M Voltage — 380/420v (3PH) 50Hz

COOLING:

Internal thermostat wiring energizes terminal O by cooling mode selection, energizing the reversing valve L1.

1. Demand initiates at Y1 in the thermostat.
2. Assuming high pressure switch S4 and low pressure switch S87 are closed, 24VAC energizes compressor contactor K1.
3. K1-1 N.O. closes, energizing compressor (B1) and outdoor fan motor (B4).

END OF COOLING DEMAND:

4. Demand is satisfied. Terminal Y1 is de-energized.
5. Compressor contactor K1 is de-energized.
6. K1-1 opens and compressor (B1) and outdoor fan motor (B4) are de-energized and stop immediately.

FIRST STAGE HEAT:

Internal thermostat wiring de-energizes terminal O by heating mode selection, de-energizing the reversing valve L1.

See steps 1, 2 and 3.

END OF FIRST STAGE HEAT:

See steps 4, 5 and 6.

DEFROST MODE:

During heating operation when outdoor coil temperature drops below 35°F (2°C) or 42°F (5.5°C)defrost switch (thermostat) S6 closes.

1. Defrost control defrost control board begins timing. If defrost thermostat (S6) remains closed at the end of the 30,60 or 90 minute period, defrost relay energizes and defrost begins.
2. During defrost defrost control board energizes the reversing valve and W1 on the terminal strip (operating indoor unit on the first stage heat mode), while de-energizing outdoor fan motor B4.
3. Defrost continues 14 ± 1 minutes or until thermostat switch (S6) opens. When defrost thermostat opens, defrost control timer loses power and resets.
4. When defrost control board resets, the reversing valve and W1 on the terminal strip are de-energized, while the outdoor fan motor B4 is energized.
5. When defrost control board resets, the reversing valve and W1 on the terminal strip are de-energized, while the outdoor fan motor B4 is energized.

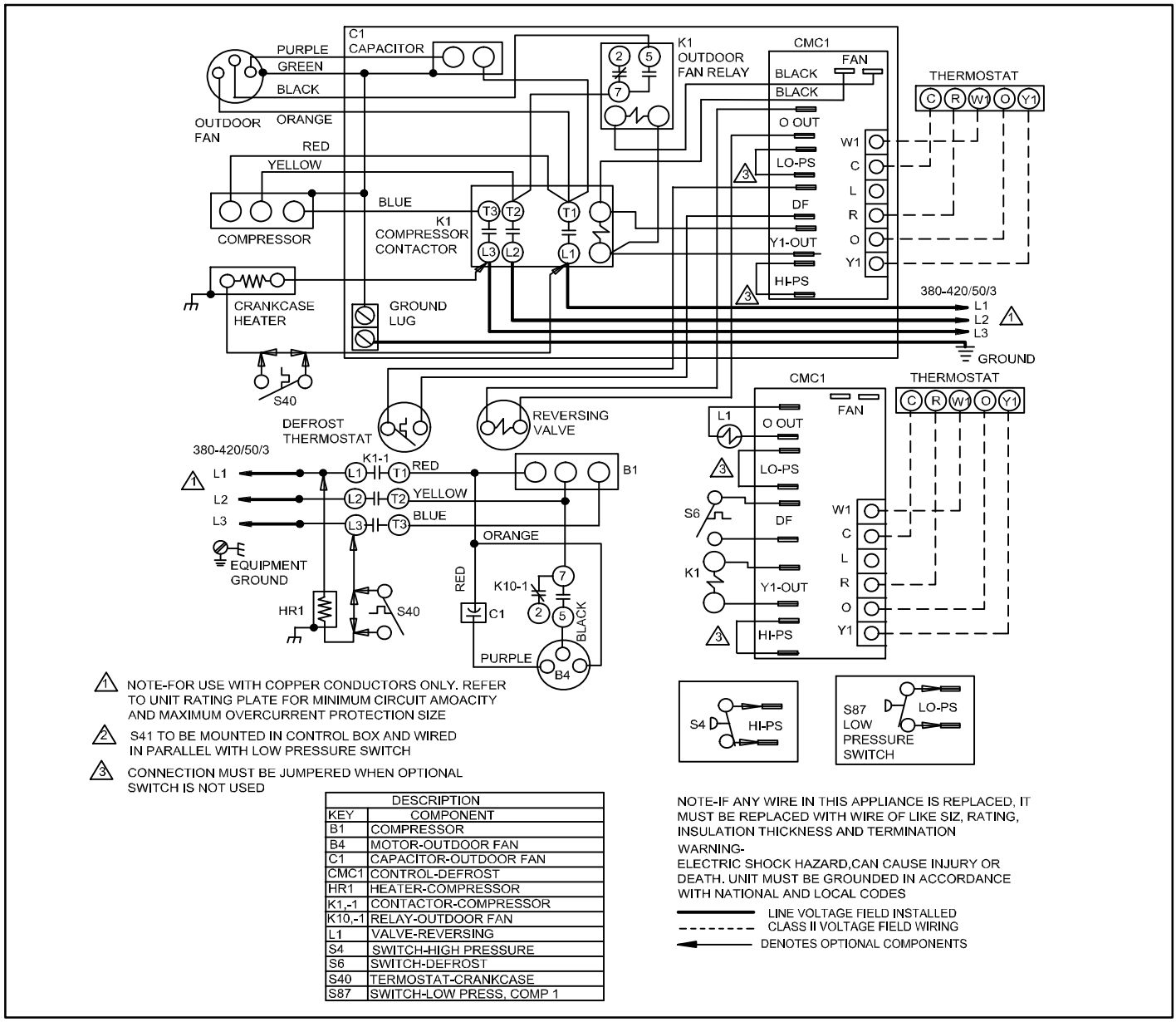

DESCRIPTION	
KEY	COMPONENT
B1	COMPRESSOR
B4	MOTOR-OUTDOOR FAN
C1	CAPACITOR-OUTDOOR FAN
CMC1	CONTROL-DEFROST
HR1	HEATER-COMPRESSOR
K1,-1	CONTACTOR-COMPRESSOR
K10,-1	RELAY-OUTDOOR FAN
L1	VALVE-REVERSING
S4	SWITCH-HIGH PRESSURE
S6	SWITCH-DEFROST
S40	TERMOSTAT-CRANKCASE
S87	SWITCH-LOW PRESS, COMP 1

Figure 19. Typical Field Wiring Diagram — M Voltage — 380/420v (3PH) 50Hz

T VOLTAGE — 220/240V (1PH) 50HZ

COOLING:

Internal thermostat wiring energizes terminal O by cooling mode selection, energizing the reversing valve L1.

1. Demand initiates at Y1 in the thermostat.
2. Assuming high pressure switch S4 and low pressure switch S87 are closed, 24VAC energizes compressor contactor K1.
3. K1-1 N.O. closes, energizing compressor (B1) and outdoor fan motor (B4).

END OF COOLING DEMAND:

4. Demand is satisfied. Terminal Y1 is de-energized.
5. Compressor contactor K1 is de-energized.
6. K1-1 opens and compressor (B1) and outdoor fan motor (B4) are de-energized and stop immediately.

FIRST STAGE HEAT:

Internal thermostat wiring de-energizes terminal O by heating mode selection, de-energizing the reversing valve L1.

See steps 1, 2 and 3.

END OF FIRST STAGE HEAT:

See steps 4, 5 and 6.

DEFROST MODE:

During heating operation when outdoor coil temperature drops below 35°F (2°C) or 42°F (5.5°C)defrost switch (thermostat) S6 closes.

1. Defrost control defrost control board begins timing. If defrost thermostat (S6) remains closed at the end of the 30,60 or 90 minute period, defrost relay energizes and defrost begins.
2. During defrost defrost control board energizes the reversing valve and W1 on the terminal strip (operating indoor unit on the first stage heat mode), while de-energizing outdoor fan motor B4.
3. Defrost continues 14 ± 1 minutes or until thermostat switch (S6) opens. When defrost thermostat opens, defrost control timer loses power and resets.
4. When defrost control board resets, the reversing valve and W1 on the terminal strip are de-energized, while the outdoor fan motor B4 is energized.
5. When defrost control board resets, the reversing valve and W1 on the terminal strip are de-energized, while the outdoor fan motor B4 is energized.

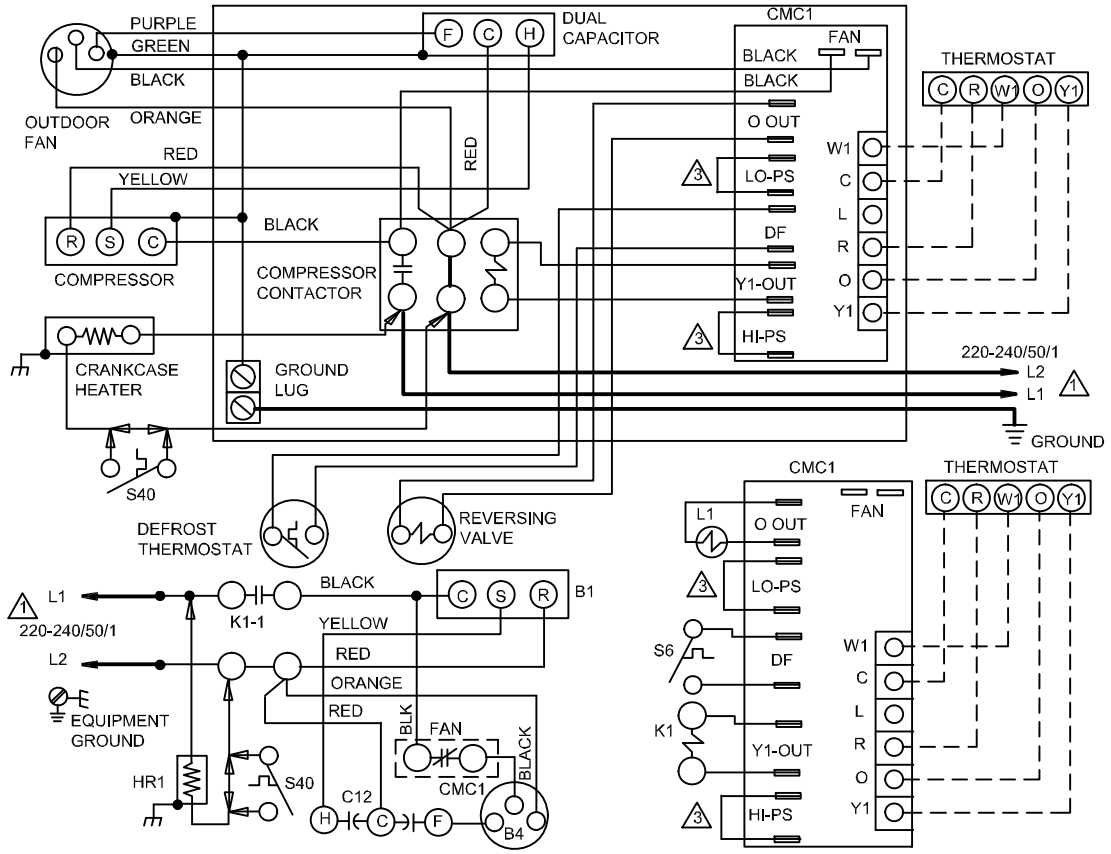

1 NOTE-FOR USE WITH COPPER CONDUCTORS ONLY. REFER TO UNIT RATING PLATE FOR MINIMUM CIRCUIT AMOACITY AND MAXIMUM OVERCURRENT PROTECTION SIZE

2 S41 TO BE MOUNTED IN CONTROL BOX AND WIRED IN PARALLEL WITH LOW PRESSURE SWITCH

3 CONNECTION MUST BE JUMPERED WHEN OPTIONAL SWITCH IS NOT USED

DESCRIPTION	
KEY	COMPONENT
B1	COMPRESSOR
B4	MOTOR-OUTDOOR FAN
C12	CAPACITOR-DUAL
CMC1	CONTROL-DEFROST
HR1	HEATER-COMPRESSOR
K1,-1	CONTACTOR-COMPRESSOR
L1	VALVE-REVERSING
S4	SWITCH-HIGH PRESSURE
S6	SWITCH-DEFROST
S40	TERMOSTAT-CRANKCASE
S41	THERMOSTAT-LOW AMBIENT
S87	SWITCH-LOW PRESS, COMP 1

S4 HI-PS

S41 LOW AMBIENT THERMO — S87 LOW PRESSURE SWITCH

NOTE-IF ANY WIRE IN THIS APPLIANCE IS REPLACED, IT MUST BE REPLACED WITH WIRE OF LIKE SIZ, RATING, INSULATION THICKNESS AND TERMINATION

WARNING-
ELECTRIC SHOCK HAZARD,CAN CAUSE INJURY OR DEATH. UNIT MUST BE GROUNDED IN ACCORDANCE WITH NATIONAL AND LOCAL CODES

LINE VOLTAGE FIELD INSTALLED
CLASS II VOLTAGE FIELD WIRING
DENOTES OPTIONAL COMPONENTS

Figure 20. Typical Field Wiring Diagram — T Voltage — 220/240v (1PH) 50Hz