0314
506215-01

506215-01
3/2014
Supersedes2/2013

Technical Publications
Litho U.S.A.

INSTALLATION & SETUP GUIDE FOR THE M2 UNIT CONTROLLER USED WITH ENERGENCE® AND STRATEGOS® ROOFTOP UNITS

(*Supports DB1 v1.14; M2 v7.13*)

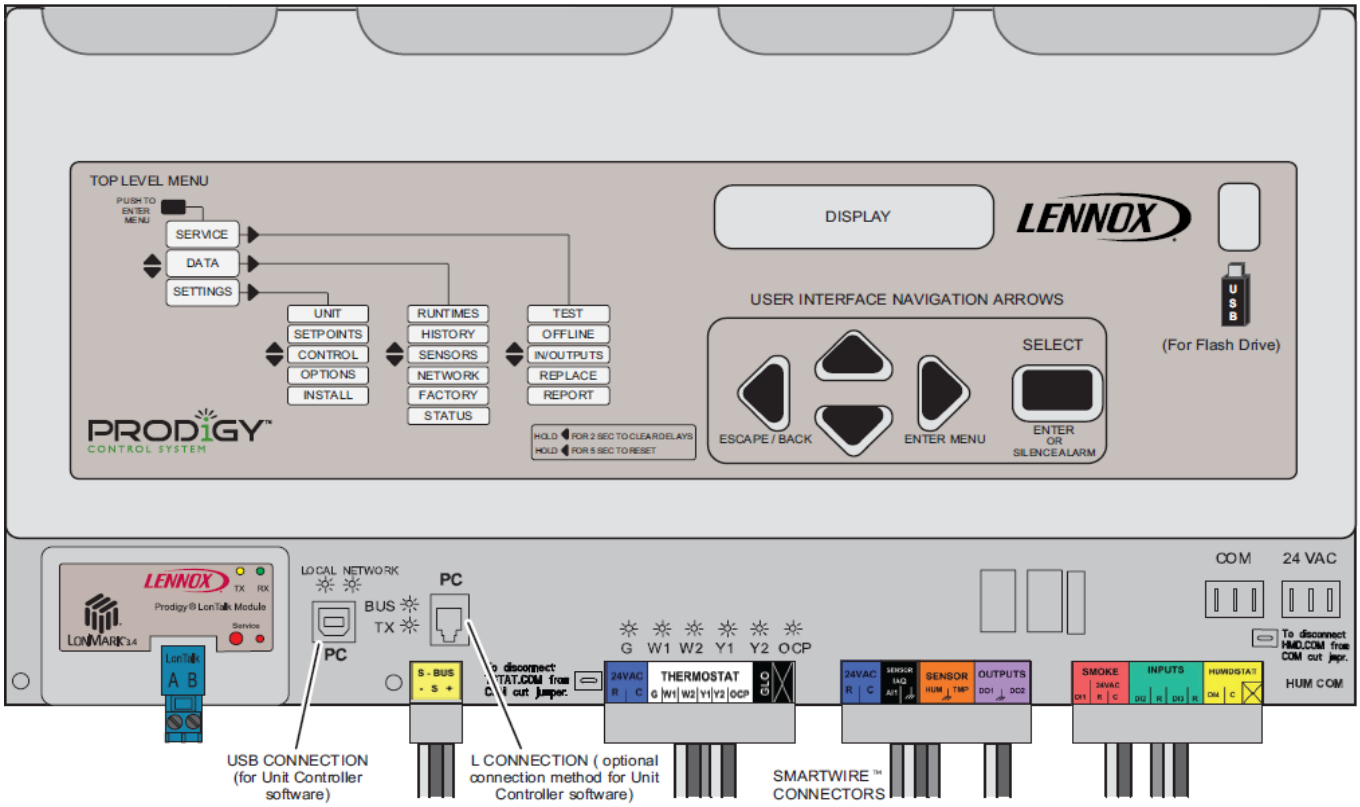

Description

The Prodigy® M2 unit controller:

- provides control functions for Energence® rooftop unit,
- includes a user interface consisting of a dot matrix display, navigation arrow buttons, a select button, and a USB port,
- provides status and diagnostic information for troubleshooting,
- allows adjustment of time delays and setpoints that enable advanced features,
- is controlled by a standard room thermostat, direct digital controller (DDC), or a zone sensor,
- can be configured as a device on the network when daisy-chained to the L Connection® Network,
- may be connected to a PC which has been loaded with Unit Controller software,
- accepts add-on boards to build variations according to application or equipment type.
- USB verification and profile sharing.

Website

For all available Prodigy® documentation, see the Lennox Commercial website (www.lennoxcommercial.com).

Table Of Contents

USB Firmware Update 2
M2 unit controller, expansion board locations, SmartWire™ connections 3
M2 unit controller LED operation indications 4
Startup 4
Menu interface 6
Operation:
- DISPLAY 7
- GUIDED SETUP 9
- SERVICE 11
- TEST 12
- DATA 13
- SETTINGS 15
- INSTALL NEW M2 22

Blower Operation with Occupancy and CEC Title 24 23
Economizer (Damper) 24
APPENDIX:
- Abbreviations 27
- Parts List 27
- USB Service Report Example 28
- Alarm Codes 31
- Wiring Diagrams 35
- M2 unit controller signal reference diagram 41
- M2 unit controller board connections diagram 42
- QUICK START GUIDE (BACK COVER) 43

M2 (A55) unit controller - location, controls, inputs/outputs

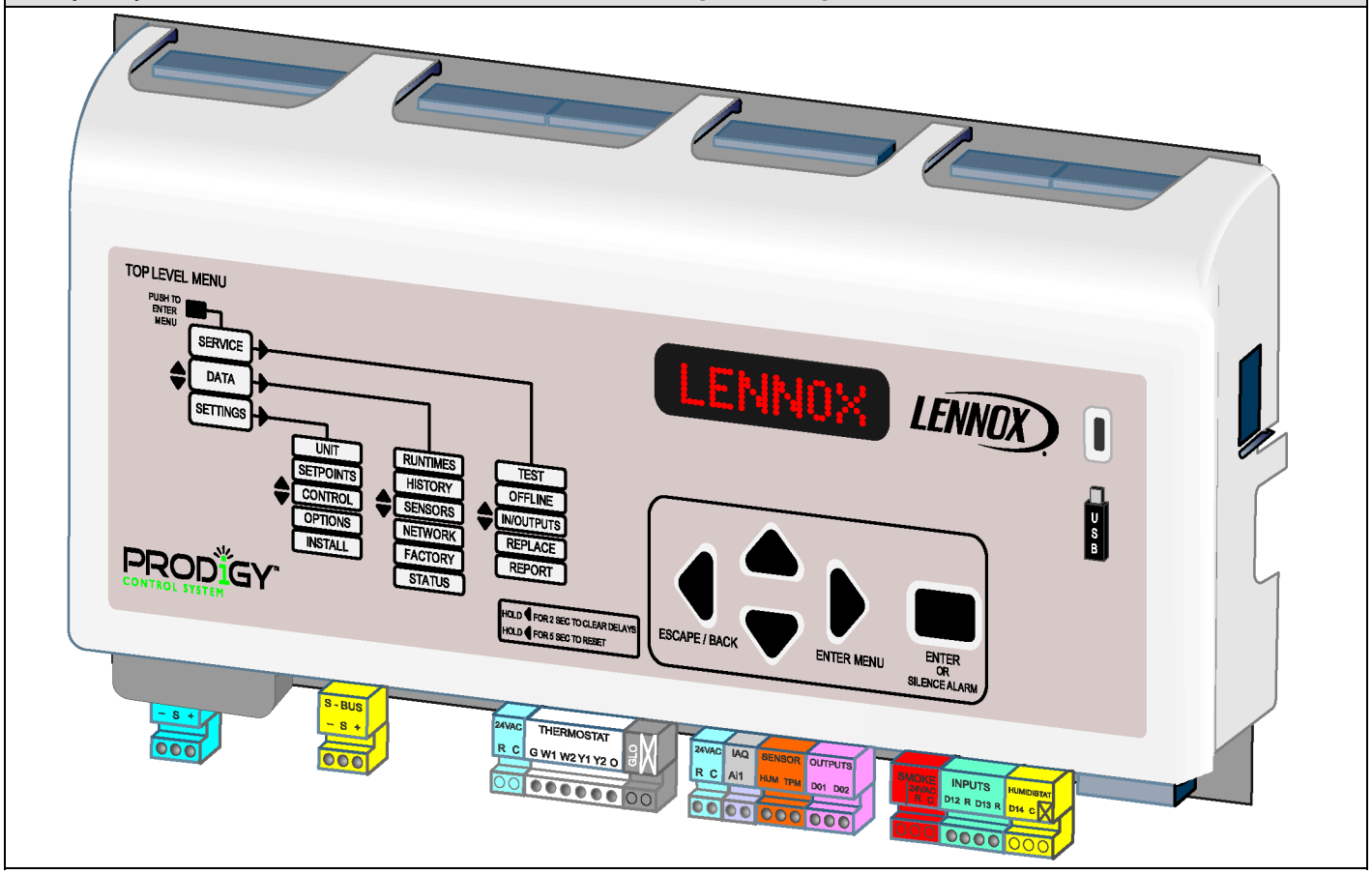

USB Firmware update

Prodigy USB Flash Drive Update Capability

USB firmware updating is only available on Prodigy Display, (DB), firmware versions v1.09.xx and later. To read the display firmware version, navigate to menu DATA > FACTORY > READ DB SOFTWARE VERSION. Check the following table to determine if your display board firmware version supports USB Flash Drive updating:

Display (DB) version	Flash Drive Updating Supported?	
	Display board	M2 Main Board
1.08.xx and earlier	NO	NO
1.09.xx D and later	NO	YES
1.09.xx H and later	YES	YES

To determine if the M2 Main Board supports firmware updates through the Prodigy Display's USB port, navigate to menu DATA > FACTORY > READ M2 SOFTWARE VERSION. Check the following table to determine if your M2 board firmware version supports USB Flash Drive updating:

M2 version	Flash Drive Updating Supported M2 Board?
7.0x.xx (no suffix)	NO
7.0x.xx S	NO
7.0x.xx U and later	YES

Auto-update

The firmware on the Prodigy (M2) controller or on the display board (DB1) can be auto-updated by inserting a USB stick with new firmware version in the USB slot while the M2 board is operating.

DB1 FIRMWARE NOTE: The menus described in the following will only be available for v1.09.xx H and later versions of the DB1 firmware.

Upon USB insertion, the display will change to “USB”. Press select button and then scroll down to FIRMWARE UPDATE and press the select button. “CHECKING FILE” will display first; then “UPDATING”, followed by “NN%”.

It will take a few minutes to update the M2 board with the new firmware. After reaching 100%, M2 UPDATE COMPLETE will display first; then it will check and update DB1 board. Upon completion, the boards will reset and restart.

Manual update

The firmware on the Prodigy (M2) controller or on the display board (DB1) can be manually updated by inserting a USB stick which may contain more than one firmware version in the USB slot.

Files needed for update

Files needed to upgrade Prodigy controller from USB stick:

1) For DB1: DBxxxxxx.BIN
2) For M2: M2xxxx.SL1

The "xxx" here are place holders for version number information in the actual file names, and varies from one version to the next.

The DB1 upgrade file has a BIN file extension, and must be located in the root folder of the thumb drive. No more than 10 files should be in the root folder of the thumb drive. If located anywhere else the Prodigy will not find the DB1 file.

The M2 upgrade file has an SL1 file extension, and must be located in the \firmware\m2 folder of the thumb drive. If located anywhere else the Prodigy will not find the M2 file.

DB1 FIRMWARE NOTE: The menus described in the following will only be available for v1.09.xx H and later versions of the DB1 firmware.

After inserting the USB stick, navigate to SERVICE > SOFTWARE RECOVERY > UPDATE M2 SOFTWARE (or UPDATE DB1 SOFTWARE). Press the select button, then use the up/down arrows to select a firmware version. Press select; "CHECKING FILE" will display first; then "UPDATING", followed by "NN%".

It will take a few minutes to update the board with the new firmware. After reaching 100%, M2 (or DB1) UPDATE COMPLETE will display first; then it will reset and restart the board.

Repeat this procedure, if desired, for the other board. You may remove the USB anytime after the RESTART begins.

M2 unit controller board, expansion board locations, SmartWire™ connections

Figure 1 shows the controller components and the locations for expansion boards.

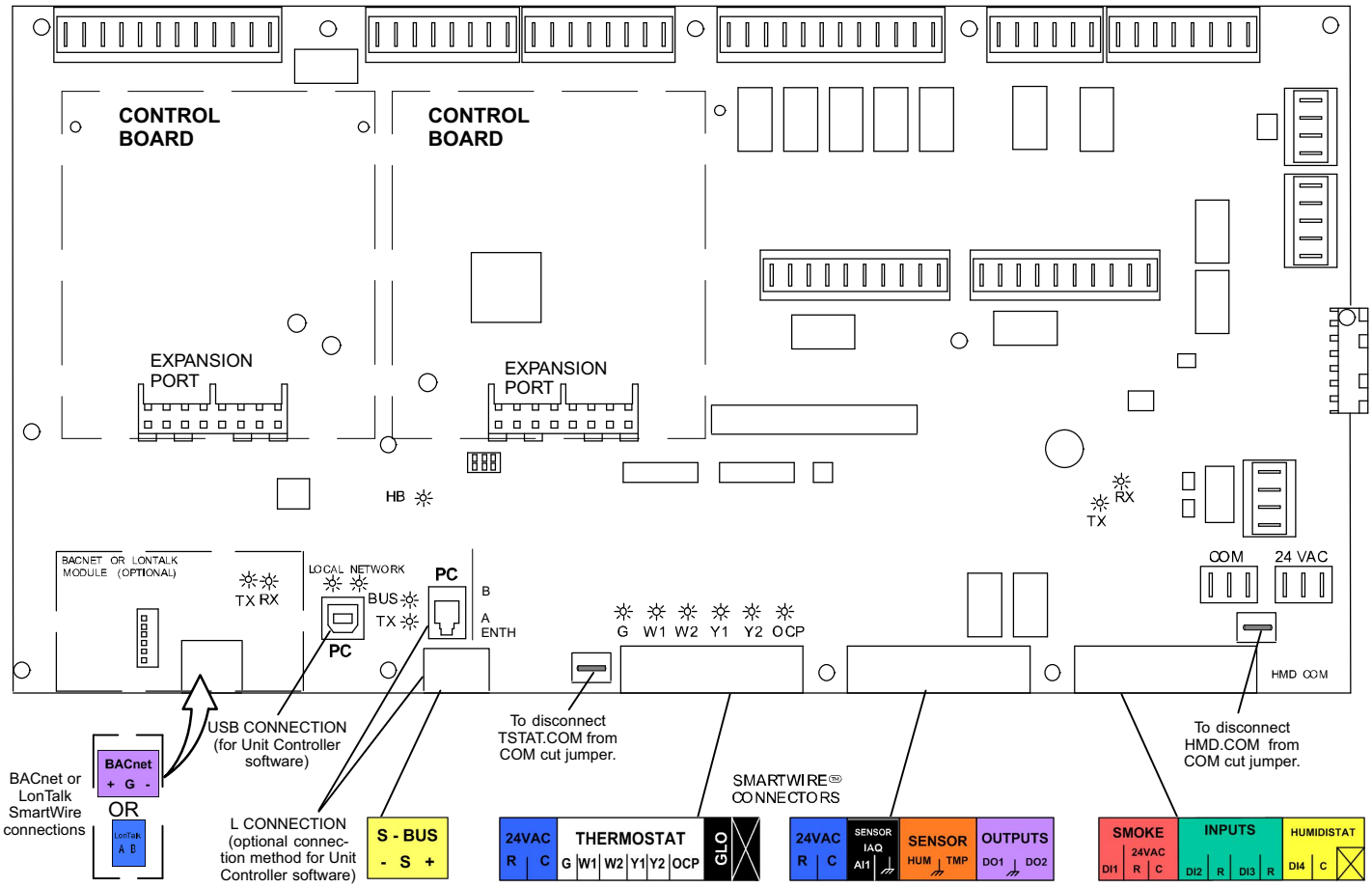

Figure 1. M2 unit controller board and expansion boards

M2 unit controller LED indicators

Some indicators on the circuit board are visible with the cover in place; others are not. The indicators and their meanings are described in table 1.

Table 1. LED operation indications

LED	Status	Indication	Meaning
Heartbeat	GREEN	SLOW FLASH	NORMAL OPERATION
	GREEN	FAST FLASH	CHECK 24V, UPDATE FIRMWARE, OR REPLACE BOARD
	UNLIT	STEADY OFF	NO VOLTAGE TO M2 BOARD OR DEFECTIVE BOARD
	GREEN	STEADY ON	DEFECTIVE BOARD (REPLACE)
OAS (Note: LED is not present in the newer M2 hardware.	GREEN	STEADY ON	OUTSIDE AIR IS SUITABLE
	GREEN	FLASHING	IAQ MODE OR MECHANICAL COOLING DURING FREE COOLING
PC Connection	LOCAL (YELLOW)	FLICKERING ON	COMMUNICATION TO PC USB CONNECTOR
	NETWORK (GREEN)	FLICKERING ON	NETWORK COMMUNICATION
S-BUS	BUS (GREEN)	FLICKERING ON	NETWORK TRAFFIC PRESENT
	TX (YELLOW)	FLICKERING ON	M2 IS TRANSMITTING
BACnet (option)	RX (GREEN)	FLICKERING ON	M2 IS RECEIVING
	TX (YELLOW)	FLICKERING ON	M2 IS TRANSMITTING
LonTalk (option)	RX (GREEN)	FLICKERING ON	M2 IS RECEIVING
	TX (YELLOW)	FLICKERING ON	M2 IS TRANSMITTING
	SERVICE (RED)	FLASHING 1 SEC. ON; 1 SEC. OFF	NODE IS NOT CONFIGURED; APPLICATION LOADED
	SERVICE (UNLIT)	STEADY OFF	NODE IS COMPLETELY CONFIGURED
	SERVICE (RED)	CONSTANT ON	NODE IS CONFIGURED; NO APPLICATION LOADED
	SERVICE (RED)	QUICK FLASHES DURING INITIALIZATION	MESSAGES BEING PASSED TO M2; NORMAL OPERATION
Thermostat Input	YELLOW	INDICATES A THERMOSTAT DEMAND	G- BLOWER ON W1- 1ST STAGE HEAT W2- 2ND STAGE HEAT Y1- 1ST STAGE COOL Y2- 2ND STAGE COOL OCP- OCCUPIED
Thermostat LEDs indicate only with incoming thermostat connection vis SmartWire™ connector.			
Slow Flash = 1 sec on; 1 sec off. Fast Flash = 1 msec on; 1 msec off. A “flickering” LED flashes significantly faster than a “fast flash“. *NOTE - LEDs are energized by 24 vac thermostat inputs.*			

Startup

Connections between RTU & M2 unit controller

The M2 unit controller connects to the rooftop unit using SmartWire™ connectors. Each connector is “keyed” so that no connector can be installed in the wrong location. Be sure all connectors are in place and completely inserted (see figure 1).

Sensor Common Isolation

Thermostat (TSTAT) and humidity (HUM) sensor commons may be isolated if they are powered remotely. Slide switch to OPEN to isolate (see figure 1).

USB interface usage

The USB port is used for verifying service, downloading reports, transferring unit profiles and performing firmware updates. Onsite data collection requires use of a USB flash drive. Data written to the drive includes date, time, serial number, catalog number, basic data, error code buffer, and unit configuration.

PC interface

The PC interface is used with unit controller software to change programming. The M2 interface uses a USB A to B male cable. You may also use a 9 pin/RS485 connection to the phone jack or S-BUS connector. A list of service connection kits is on Page 27.

SmartWire™ Field Wiring Connections

The SmartWire™ connectors, P297, P298 and P299, allow for easy field wiring connection points.

2-amp fuse or wire jumper

The 24VAC supply outputs, (R), on these connectors are routed through the **2-amp fuse, F1**, on earlier boards or a wire jumper on later boards.

TSTAT COM switch (earlier boards) OR TSTAT COM wire jumpers (later boards)

TSTAT COM is located to the left of P297. This **switch** would be set to the LEFT or the **wire jumpers** would be cut only in unique situations where the device supplying the thermostat signals to the Prodigy® controller has its own power source and does not share a common reference voltage with the Prodigy controller. Otherwise the switch needs to be set to the default, closed position, to the RIGHT and the wire jumper would remain intact, as shipped from the factory.

HMD COM switch (earlier boards) OR HMD COM wire jumpers (later boards)

HMD COM is located to the left of P299. This **switch** would be set to the RIGHT or the **wire jumpers** would be cut only in unique situations where the device supplying the thermostat signals to the Prodigy controller has its own power source and does not share a common reference voltage with the Prodigy controller. Otherwise the switch needs to be set to the default, closed position, to the LEFT and the wire jumper would remain intact, as shipped from the factory.

User interface menu

The user interface is accessed through the menu navigation arrows ◀▶ ▼▲ and the select button ▬. The diagram in figure 2 shows a high level overview of the main menu options along with the next level list of selections. The lower level options are described later in this manual.

"Home" location, DISPLAY—When the unit is powered on, one of the features in the DISPLAY column will be shown (the word 'DISPLAY' is never shown). What is displayed in this "home" screen, is dependant on the priority message present at the time, in priority order of top-to-bottom of the left column in figure 2. For example, if an alarm is present, that will be displayed until it has been silenced or cleared.

To access the other three columns, first press ▬ and then use ▼▲ to scroll between SERVICE, DATA, AND SETTINGS. Next, press ▬ to open the SERVICE (or DATA or SETTINGS) menu. Use ▼▲ until desired item is displayed.

To return to DISPLAY, use ◀ (if deep in the menu structure, hold it down; it will step back to display).

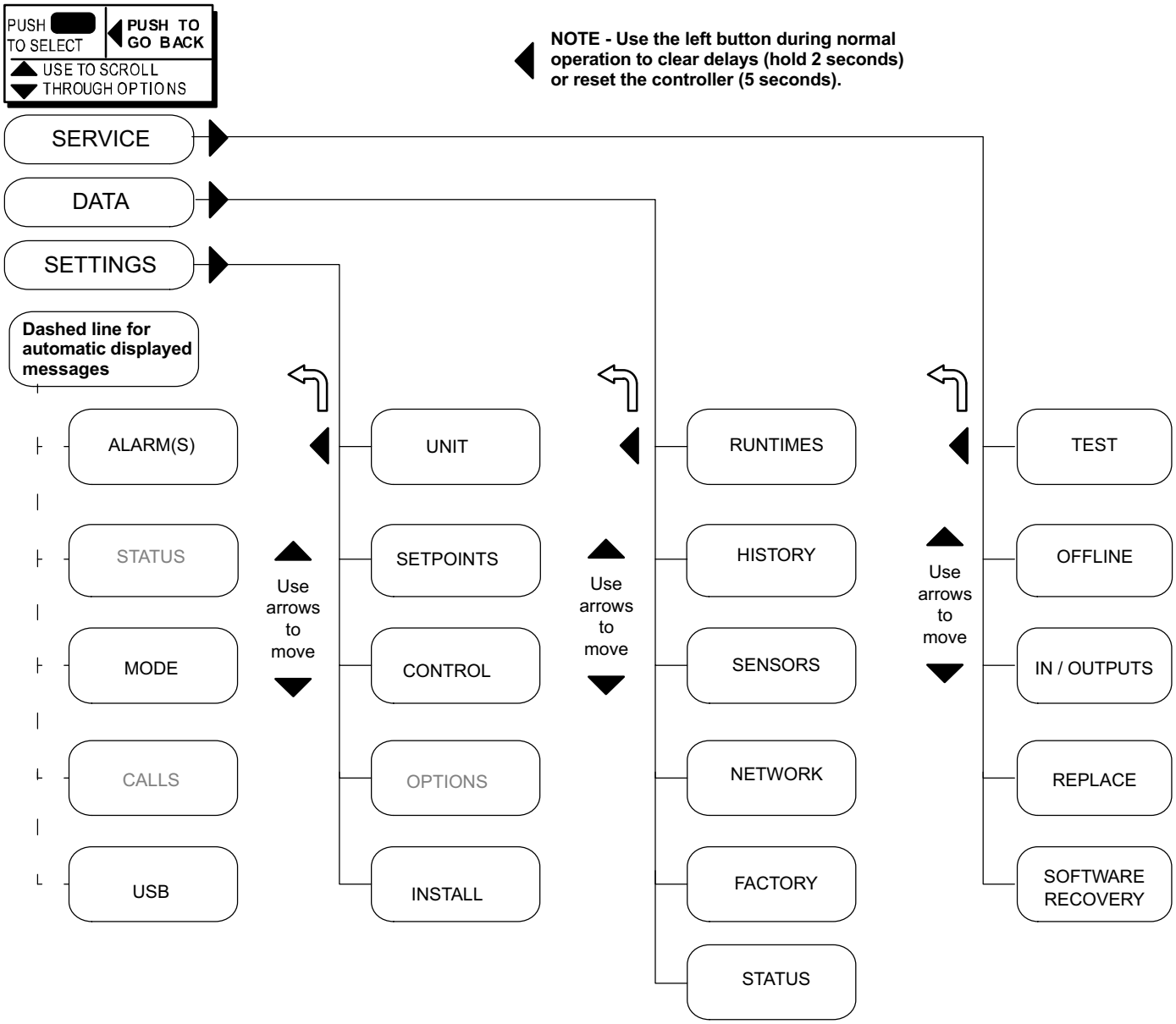

Figure 2. M2 unit controller main interface menu

Menu Interface

Table 2 shows the major levels of the menu interface. Many of these options have more levels and are described in the following sections that detail DISPLAY, SERVICE, DATA, and SETTINGS.

Use rectangular button ▬ (ENTER) or ▶ to progress to next menu level (i.e. Level 1 to Level 2).

Use ◀ to "back up" to the next higher menu level (i.e. Level 2 to Level 1).

Use ▼▲ to move (scroll) within a menu level; also use to change values of selected item.

Table 2. Menu Interface

Level 1	Level 2	Level 3
NOTE - Features and options not currently available are greyed out in the manual and will show a message of "N/A" on the display		
(display area)	**ALARM**	SILENCE (push ENTER button to silence)
	ALARMS (multiple)	SILENCE ALL (push ENTER button to silence all alarms; or push ▶ to view alarms and ▲▼ to scroll thru description list.)
	MODE	COMP LOAD SHEDDING COOLING COOLING W/FREE COOLING DAMPER MODULATING WHILE COMPRESSOR ON FREE COOLING DEHUMIDIFICATION FAN ONLY FAN ONLY - OAS FRESH AIR COOL FRESH AIR HEAT HEATING HVAC OFF IDLE IDLE - OAS LOW AMBIENT LOCKOUT MORNING WARMUP M2 FAILED TO RESPOND M2 RESET OFF ON ALARM PRE-COOL PRE INSTALL RESTARTING.. SMOKE TEST PROCESSING (one blinking LED)
	LonTalk	NEURON ID XX:XX:XX:XX:XX:XX
	USB	WRITING USB WRITING ALARM/STATUS LOG USB COMPLETE UPDATE FIRMWARE (For versions 1.09 xx H and later)
SERVICE (USE ARROWS TO MOVE)	**TEST**	GUIDED (N/A) BLOWER FANS COOL HEAT DAMPER HUMIDITROL MGV VAV SENSORS OUTPUTS CONTROLLER
	OFFLINE	LOCKOUT BLOWER ONLY (N/A) COOLING ONLY (N/A) HEATING ONLY (N/A) RESET
	IN / OUTPUTS	THERMOSTAT ZONING (N/A) SENSORS RELAYS NETWORK
	REPLACE	FILTER BELT UV LAMP FANS BLOWER COMPRESSOR
	SOFTWARE RECOVERY	UPDATE M2 SOFTWARE UPDATE DB1 SOFTWARE ***(FOR DB VERSIONS 1.09H AND LATER ONLY)***

Table 2. Menu Interface (cont'd)

Level 1	Level 2	Level 3
DATA (USE ARROWS TO MOVE)	**RUNTIMES**	POWER ON FILTER: XX HRS BELT: XX HRS UV LAMP: XX HRS BLOWER: XX HRS - XX CYC COOLING HEATING FREE COOLING: XX HRS - XX CYC FANS EXHAUST HUMIDITROL: XX HRS - XX CYC
	HISTORY	ALARMS STATUS LAST USB REPORT READ INSTALL RPT CLEAR HISTORY
	SENSORS (also accessible thru In / Outputs)	TSTAT BRPM:XX OAT:XXºF RAT:XXºF DAT:XXºF ZAT:XXºF IAQ:XX PPM SMK:OFF/ON RH:XX% IE:XX MA OE:XX MA GLO:OFF/ON DI2:OFF/ON DI3:OFF/ON DI4:OFF/ON
	NETWORK	LCONN ADDRESS BACNET LonTalk
	FACTORY	READ M2 SOFTWARE VERSION READ DB SOFTWARE VERSION READ FACTORY RPT CATALOG NO. MODEL NO. SERIAL NO.
	STATUS	OCCUPIED/UNOCCUPIED SETPOINTS HH CC F APP MODE 255 255 COMM TYPE COMM TIMER #CURR ALRMS N: A1, A2, … AN BLOWER DAMPER STATUS DAMPER POS
SETTINGS (USE ARROWS TO MOVE)	**UNIT**	UNIT NO. DATE/TIME UNITS F/C
	SETPOINTS	COOLING HEATING DAMPER REHEAT EXHAUST IAQ ALARMS
	CONTROL	LOCAL THERMOSTAT LCONN BACnet LonTalk MSAV REHEAT SMOKE MODE GUIDED SETUP ECTO
	OPTIONS	N/A
	INSTALL	NEW M2 DAMPER LANGUAGE (ENGL/SPAN/FREN) FLOAT SW BLOWER PROVING SW DIRTY FILTER SW BLOWER OVERLOAD SW PHASE MONITOR UV LAMP ELECTRIC HEAT STAGES UPDATE DISPLAY SOFTWARE

The display shows operating mode if in normal operation. Alarm, status, calls and plugging in the USB will interrupt the display. Alarm messages will stay displayed until corrected or silenced using the local menu.

ALARM Example – MODE message “COOLING” is displaying when a smoke alarm occurs; then “ALARM (XX) SMOKE A173” displays until cleared. You must clear all alarms and status to see normal MODE message. Strike 3 alarms will say “ALARM(XX) STRIKE 3 COMP1 HIGH PRESS S4” after the alarm message.

USB – normal MODE message is displayed when USB is plugged in.

Normal Mode Messages

The format of the message is mode and setpoint (see table 3).

Table 3. Possible MODE messages

COMP LOAD SHEDDING	Unit is running at lower power capacity
COOLING	Cool demand present; unit is cooling
COOLING W/FREE COOLING	Compressor cooling and outdoor damper is open to maximum.
DAMPER MODULATING WHILE COMPRESSOR ON	Compressor is on during free-cooling, and damper is modulating.
FREE COOLING	No compressor cooling
DEHUMIDIFICATION	Unit is dehumidifying
FAN ONLY	Fan only
FAN ONLY - OAS	Fan only, outdoor air is suitable for free cooling
FRESH AIR COOL	Cool ventilation air to neutral value
FRESH AIR HEAT	Heat ventilation air to neutral value
HEATING	Heat demand present; unit is heating
HVAC OFF	No heat, cool, ventilation allowed
IDLE	Demand satisfied; blower off
IDLE - OAS	Same as IDLE, plus outdoor air is suitable for free-cooling
LOW AMBIENT LOCKOUT	Outdoor air is too cold to allow fans to run
MORNING WARMUP	Outdoor air damper closed
M2 FAILED TO RESPOND	Display is missing messages from M2
M2 RESET	M2 controller is resetting
OFF ON ALARM	Unit is off due to presence of alarm
PRE-COOL	Compressor not allowed—free cooling. (During the first 30 minutes of the first cooling demand following a change from unoccupied to occupied, calls for mechanical [compressor] cooling are ignored if an economizer is installed and if outdoor air is suitable for free cooling.)
PREINSTALL	Must follow installation menus
RESTARTING..	Only displayed at power-up
SMOKE	Smoke input detected
TEST	Network has unit in test mode
PROCESSING	Display is busy processing data from M2 controller
(one blinking LED)	This indicates bootloader mode

Unit Operation

This section describes the display and control buttons, how to configure the unit, and how to read stored configuration data, status, and alarms.

The M2 unit controller is an input and output junction point. If in the thermostat mode, thermostat inputs at P297 result in an output to unit components (see table 9 on Page 41). If the heartbeat LED is not flashing, see table 1 (Page 4) for heartbeat operation. If the display shows an alarm, refer to table 8 (Page 31) for more information. If the thermostat input indicating lights are not responding appropriately, check the thermostat or a DDC control acting as thermostat inputs into P297.

Basic cooling and heating functions may be energized to test major unit components by using the M2 unit controller testing function or by using jumper wires on the Field Wiring Termination plug P297.

To access the other three columns, first press ▬ and then use ▼▲ to scroll between SERVICE, DATA, AND SETTINGS. Next, press ▬ to open the SERVICE (or DATA or SETTINGS) menu. Use ▼▲ until desired item is displayed.

Alarms

Figure 3 shows how alarms may be viewed and silenced.

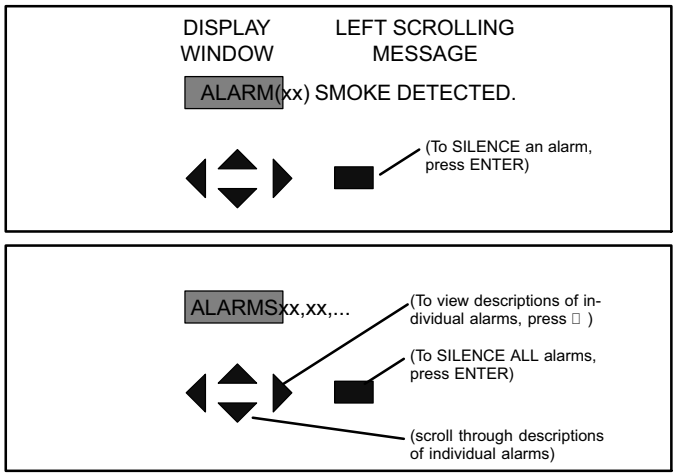

Figure 3. Alarm Code Readout Examples

The most recent 84 alarms will be stored with date/time stamp. When more than 84 alarms are encountered the oldest are over-written.

Selected alarms (marked with * in table 8) result in the closure of the service relay contacts (DO1). The contacts remain closed until the Prodigy resets, or the alarm history is cleared by the user.

This is the default operation of the service relay. Other modes of operation may be selected and are described in the Prodigy Application Guide (Advanced Features).

USB Menu

When the Lennox USB drive is plugged in during normal MODE, a menu will be displayed providing options to save and load unit profiles as well as capturing unit data for service verification.

Multiple units may use the same USB drive. The filename of the service reports will be based on the unit's serial number; for example 5608J5875.txt. The filename of the unit profiles will be based on the unit's catalog number; for example AA1AA.dat.

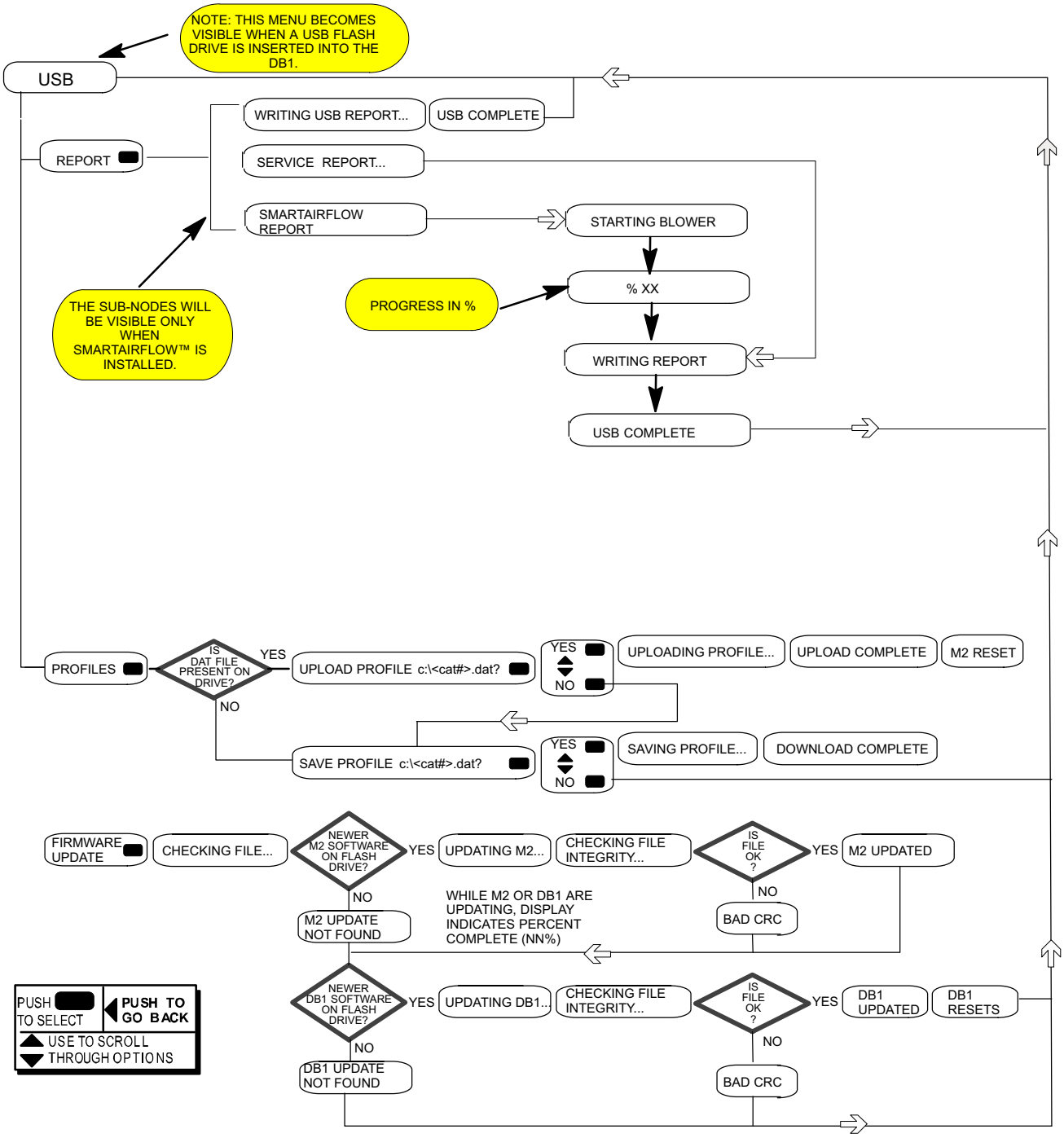

GUIDED SETUP Menu Interface

Upon initial unit start-up, the M2 Unit Controller's menu interface defaults to a GUIDED SETUP. This setup is described on this and the following page.

This guided setup is available at any time should you wish to go back through and re-configure the system's setup parameters.

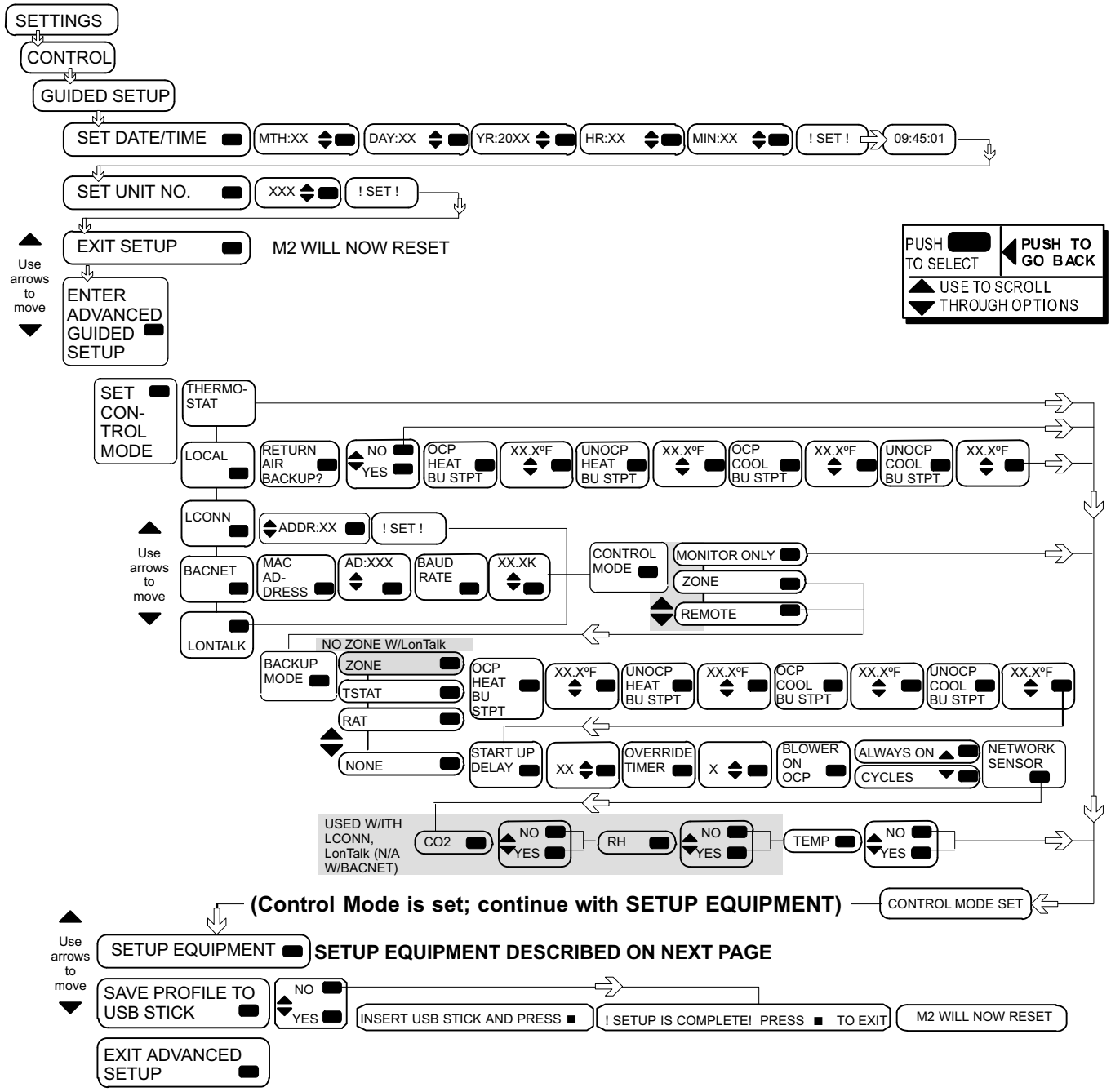

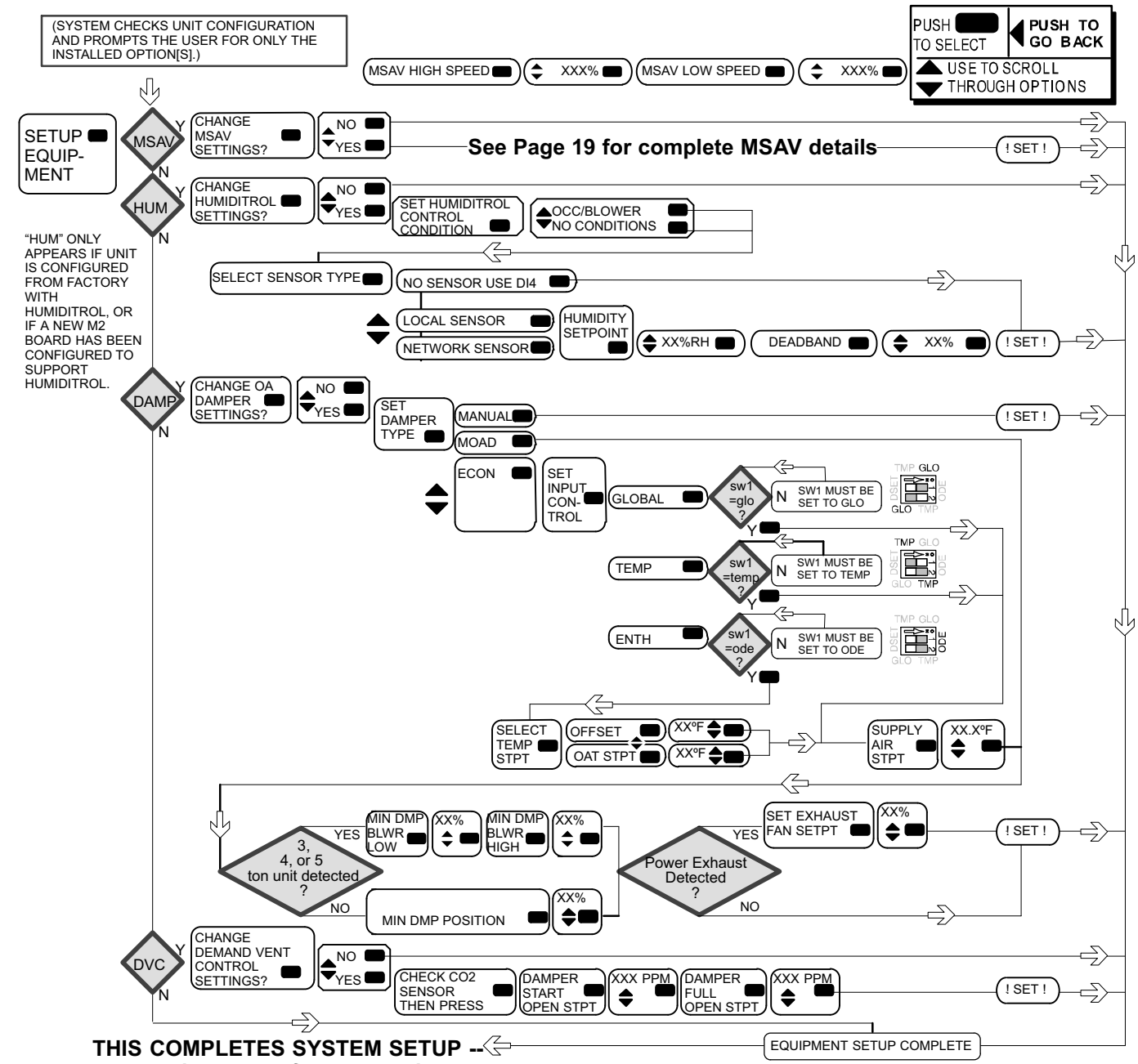

THIS COMPLETES SYSTEM SETUP --
see previous page for save options

From the DISPLAY mode, press ▬ and then use ▼▲ to scroll to SERVICE. Next, press ▬ to enter the SERVICE menu. Use ▼▲ until desired item is displayed.

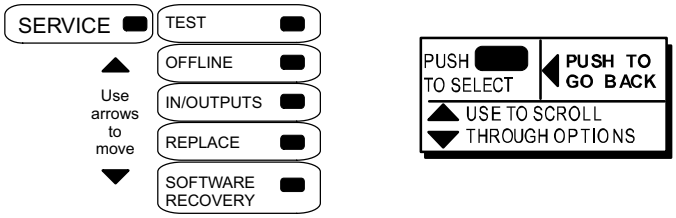

Using SERVICE, you may run tests that check a functional operation (e.g. HEATING) or you may run tests that single out a system component for checking. The diagram that follow in this section show how to navigate through the system to access service and test functions.

When the list of tests appears, use the up/down arrows until the test you want to run appears. Then press the SELECT BUTTON to begin running the test.

SERVICE > TEST

In the SERVICE menu, use ▼▲ until TEST is displayed. Press ▬ to enter the TEST menu.

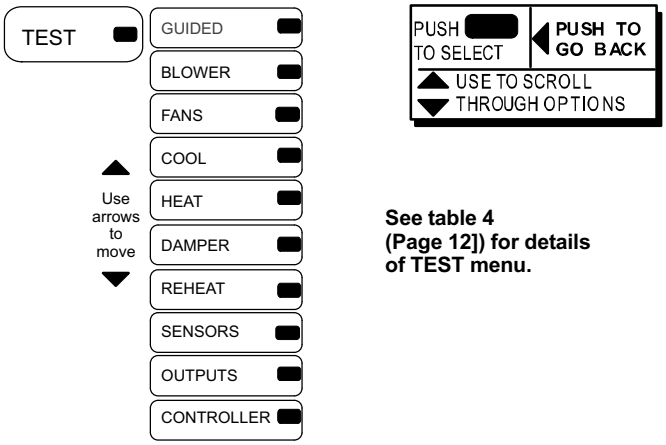

See table 4 (Page 12]) for details of TEST menu.

Using the TEST menu, the service technician may run a sequence of tests to gather information available while that component is turned on. The unit will return to normal mode when leaving the TEST menu. See table 4 for details.

Any Status/Alarm codes found during testing will be logged to the event history.

Upon exit from TEST mode, the unit will return to normal operation if no key is pushed for 1 hour.

SERVICE > OFFLINE

In the SERVICE menu, use ▼▲ until OFFLINE is displayed. Press ▬ to enter the OFFLINE menu.

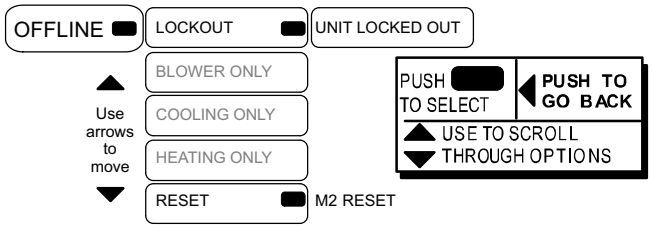

SERVICE > IN / OUTPUTS

In the SERVICE menu, use ▼▲ until IN / OUTPUTS is displayed. Press ▬ to enter the IN / OUTPUTS menu.

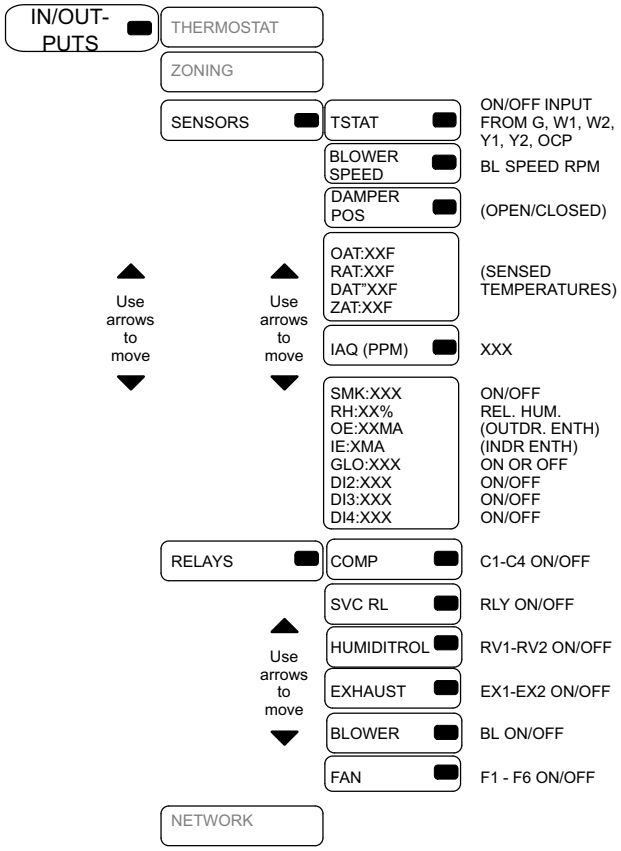

SERVICE > REPLACE

In the SERVICE menu, use REPLACE to reset the runtime counters for the listed device when a new hardware component has been installed in the system.

Use ▼▲ until REPLACE is displayed. Press ▬ to enter the REPLACE menu. Select one of the listed options and press ▬;this will reset the runtime for the new part to zero.

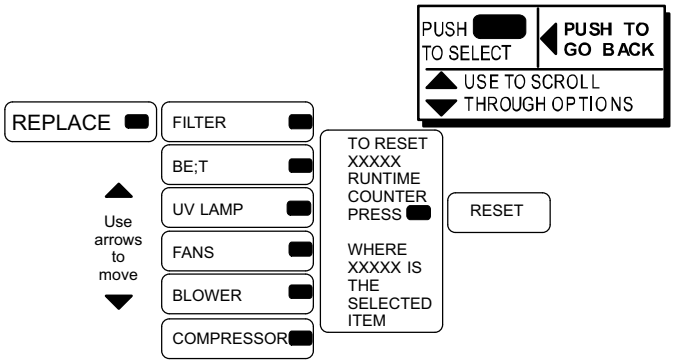

SERVICE > SOFTWARE RECOVERY

In the SERVICE menu, use SOFTWARE RECOVERY to update firmware (see USB Firmware update Page 2).

SERVICE > TEST (Continued)

Table 4. TEST

TEST | GUIDED

NOTE: Unit configuration determines which menu items are displayed

PUSH TO SELECT | PUSH TO GO BACK
USE TO SCROLL THROUGH OPTIONS

BLOWER	BLOWER HI	BL OFF/ON	—	—	—	Run blower on maximum speed
	BLOWER LOW	BL OFF/ON	—	—	—	Run blower on minimum speed
Use arrows to move	PROVING SWITCH	PSW CLO	—	—	—	Display status of the switch with blower low speed.
	FILTER SWITCH	FSW OPE	—	—	—	Display status of the switch with blower low speed
	RPM	XX RPM	—	—	—	Shows RPM for blower and allows adjustment
	ACTUAL SUPPLY CFM	XXXX CFM	—	—	—	Will be displayed only if SmartAirflow™ option is installed.
	SPEED	XX %	—	—	—	Will allow adjustment of blower torque in %.
FANS	FAN1	FN1 OFF/ON	—	—	—	Allow turning on FAN1 individually
	FANn (see note 1)	FNn OFF/ON	—	—	—	Allow turning on FANn individually
COOL	COOL-FULL	RAT XXF	—	—	—	Monitors return air temp. of all stages. Dampers close for compressor tests.
Use arrows to move		DAT XXF	—	—	—	Monitors discharge air temp. Blower, dampers, fans actuate automatically during tests.
Use arrows to move	COOLn (see note 2)	RAT XXF	—	—	—	Monitors return air temp. Stage 1 thru 4 compr low-speed test. Dampers are closed for compressor tests.
		DAT XXF	—	—	—	Monitors discharge air temperature. Blower, dampers, fans are actuated automatically during tests.
HEAT	HEAT-FULL	RAT XXF	—	—	—	Monitors return air temperature of all stages. Dampers automatically close and blower comes on for heat test.
Use arrows to move		DAT XXF	—	—	—	Monitors discharge air temperature of all stages. Dampers automatically close and blower comes on for heat test.
	HEATn (see note 2)	RAT XXF	—	—	—	Monitors discharge air temperature. Stage 1 thru 4 heat test; dampers automatically close and blower comes on for heat test.
		DAT XXF	—	—	—	Monitors discharge air temperature. Stage 1 thru 4 heat test; dampers automatically close and blower comes on for heat test.
DAMPER	POSITION	XXX% OPEN	DP XXX%			Damper allows testing economizer, motorized damper, and powered exhaust. Position allows monitoring damper position and control using arrow keys.
Use arrows to move	IEN:XX MA	—	—	—	—	Monitors indoor enthalpy sensor.
	OEN:XX MA	—	—	—	—	Monitors outdoor enthalpy sensor.
	EXHAUST	EXHAUST1	SET OFF/ON	EX1OFF/ON		Turns on/off stage 1 fan individually.
		EXHAUST2	SET OFF/ON	EX2 OFF/ON		Turns on/off stage 2 fan individually.
HUMIDI-TROL	HUM Y1	HUM Y1 OK	—	—	—	Turns on stage 1 re-heat; displays report.
	HUM Y2	HUM Y2 OK	—	—	—	Turns on stage 2 re-heat; displays report.
MGV	XXX	—	—	—	—	(If installed) Measures and reports voltage (0-10V)
VAV	A01 / A02	—	—	—	—	(If installed) Measures and reports voltage (0-10V)
SENSORS	—	—	—	—	—	Use sensor tests to choose each sensor and read the current sensed value.
OUTPUTS	SERVICE RELAY	RLY OFF/ON	—	—	—	Output test of service relay.
	DO2	DO2 OFF/OON	—	—	—	Output test of DO2.
	DO3	DO3 OFF/ON	—	—	—	Output test of DO3.
CONTROL-LER	M2 TEST	—	—	—	—	M2 OK" if no errors. Checks memory and installation of controller options.
	DISPLAY TEST	—	—	—	—	"TEST OK" if no errors. Checks switches and screen.
	SETUP	—	—	—	—	"SETUP OK" if no errors. Checks proper installation of controller boards, switches, and settings

TSTAT
BLOWER SPEED
DAMPER POS
OAT:XX ºF
RAT:XX ºF
DAT:XX ºF
ZAT:XX ºF
IAQ (PPM)
SMK:OFF/ON
RH:XX%
IE:XX MA
OE:XX MA
GLO:OFF/ON
D12:OFF/ON
DI3:OFF/ON
DI4:OFF/ON

NOTE 1. The number of fans, 1 min, 6 max, and their respective control output depends on the unit configuration. Only the fans present in unit are displayed. Refer to unit schematics for additional information.

NOTE 2. The number of stages, 1 min, 4 max, depends on unit configuration. Only stages present in unit are displayed.

From the DISPLAY mode, press ▬ and then use ▼▲ to scroll to DATA. Next, press ▬ to enter the DATA menu. Use ▼▲ until desired item is displayed.

Use DATA to view information stored in the M2 Unit Controller.

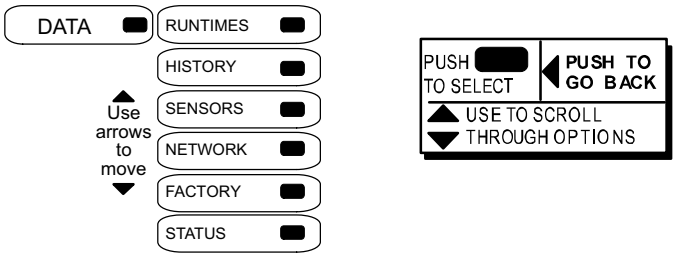

DATA > RUNTIMES

In the DATA menu, use ▼▲ until RUNTIMES is displayed. Press ▬ to enter the RUNTIMES menu.

View accumulated runtime hours logged against various components and systems by the M2 unit controller.

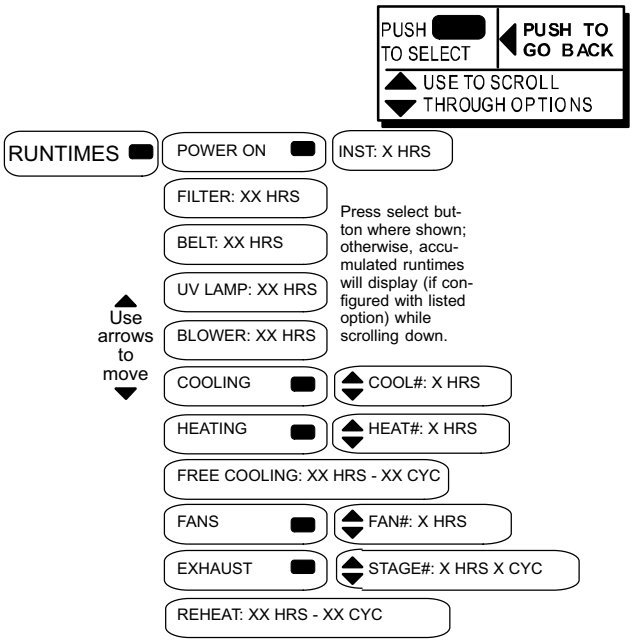

DATA > HISTORY

In the DATA menu, use ▼▲ until HISTORY is displayed. Press ▬ to enter the HISTORY menu.

Read the accumulated historical data of alarms, status, and USB reports logged by the M2 unit controller.

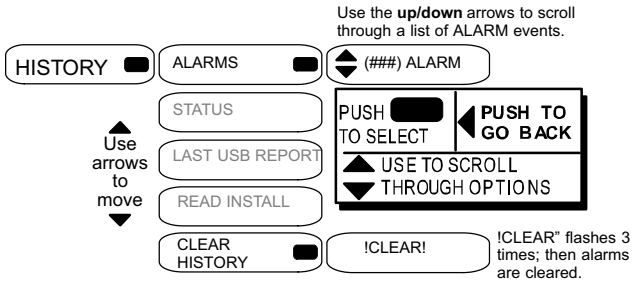

DATA > SENSORS

In the DATA menu, use ▼▲ until SENSORS is displayed. Press ▬ to enter the SENSORS menu.

View the current sensed value for various systems being sent to the M2 unit controller.

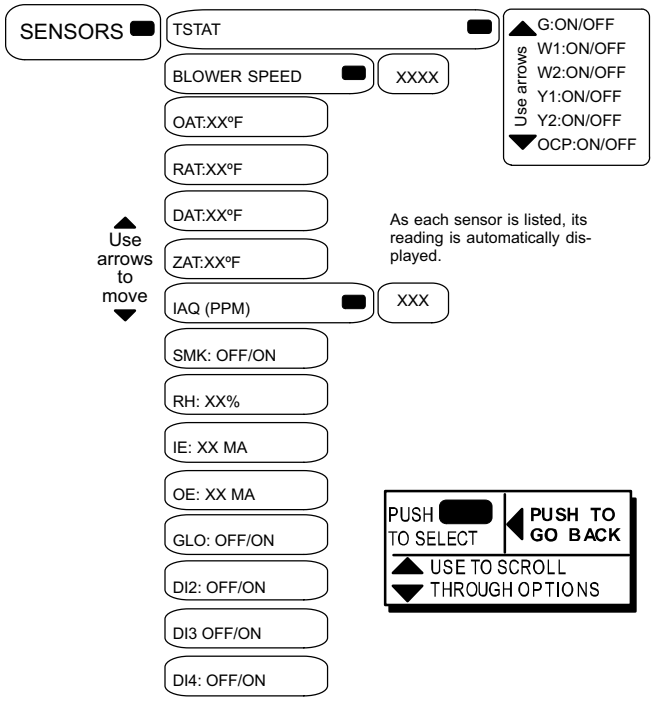

DATA > NETWORK

In the DATA menu, use ▼▲ until NETWORK is displayed. Press ▬ to enter the NETWORK menu. Read the NETWORK addresses stored in the M2 unit controller.

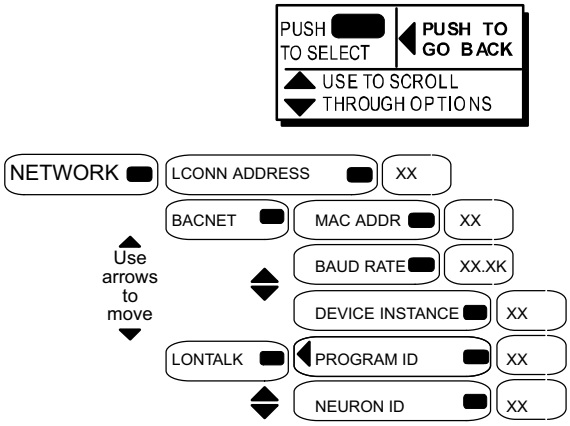

DATA > FACTORY

In the DATA menu, use ▼▲ until FACTORY is displayed. Press ▬ to enter the NETWORK menu. Read the FACTORY information stored in the M2 unit controller.

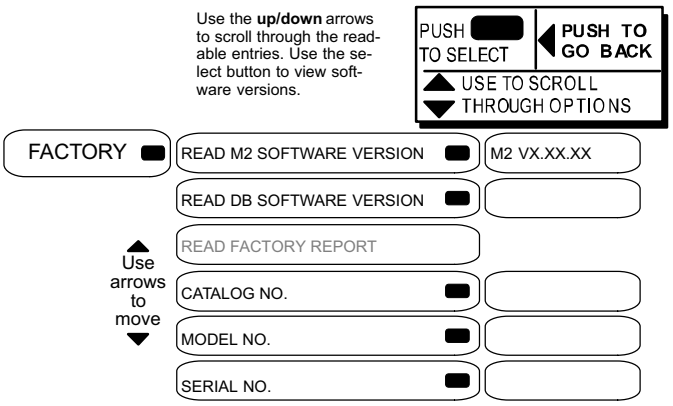

DATA > STATUS

In the DATA menu, use ▼▲ until STATUS is displayed. Press ▬ to enter the STATUS menu.

Read the STATUS information stored in the M2 unit controller.

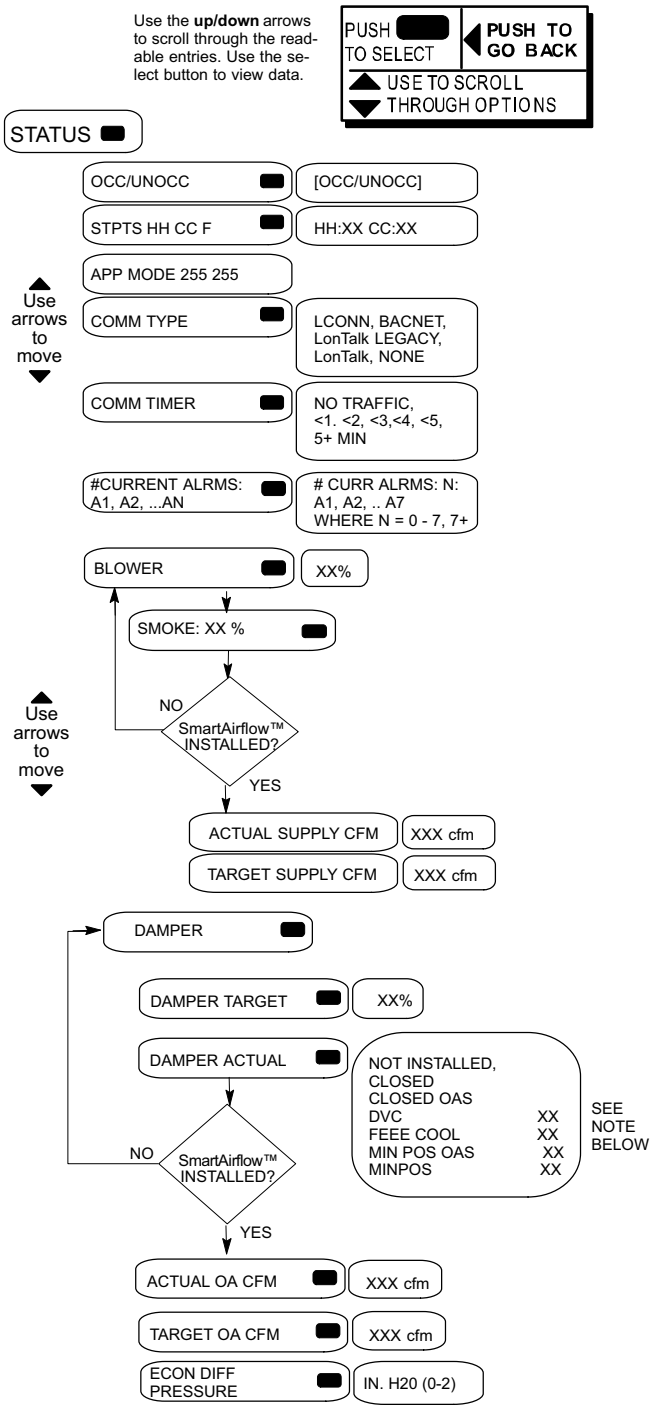

***NOTE**: Display will indicate OAS when outdoor air could be used for free cooling. For older hardware OAS LED will be an additional indication. No OAS indication (display or LED) is available during demand control ventilation (DVC) operation, although free cooling can still occur. xx is the damper position percent open feedback signal.*

From the DISPLAY mode, press ▬ and then use ▼▲ to scroll to SETTINGS. Next, press ▬ to enter the SETTINGS menu. Use ▼▲ until desired item is displayed.

Use SETTINGS to make changes to the Unit Controller after initial installation.

Many of the setting changes are the same as install. Changes are limited by the unit's build information. If you install new options, you can make changes to equipment settings beyond the factory values.

Load shed to include power percentage and hard wire.

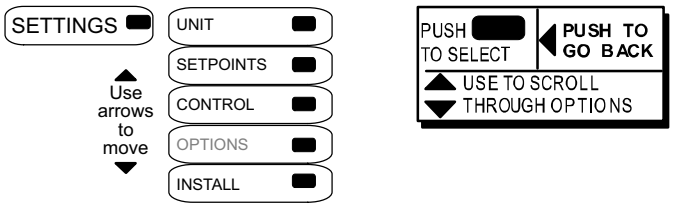

SETTINGS > UNIT

In the SETTINGS menu, use ▼▲ until UNIT is displayed. Press ▬ to enter the UNIT menu. View and change the current settings.

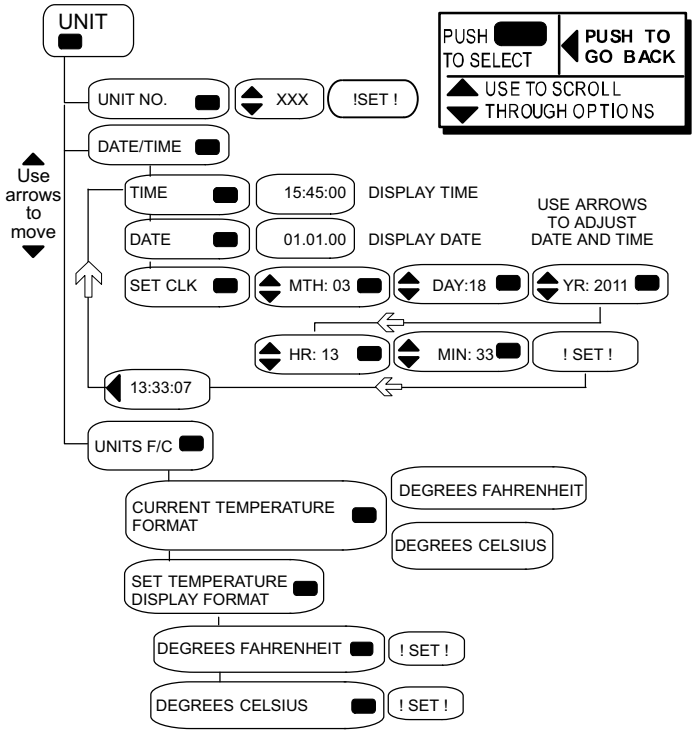

SETTINGS > SETPOINTS > COOLING HEATING REHEAT EXHAUST IAQ

(Also see SETTINGS > SETPOINTS > DAMPER)

In the SETTINGS menu, use ▼▲ until SETPOINTS is displayed. Press ▬ to enter the SETPOINTS menu.

View and change the current system setpoints setup in the M2 unit controller as shown in the following diagrams for COOLING, HEATING, REHEAT, EXHAUST and IAQ.

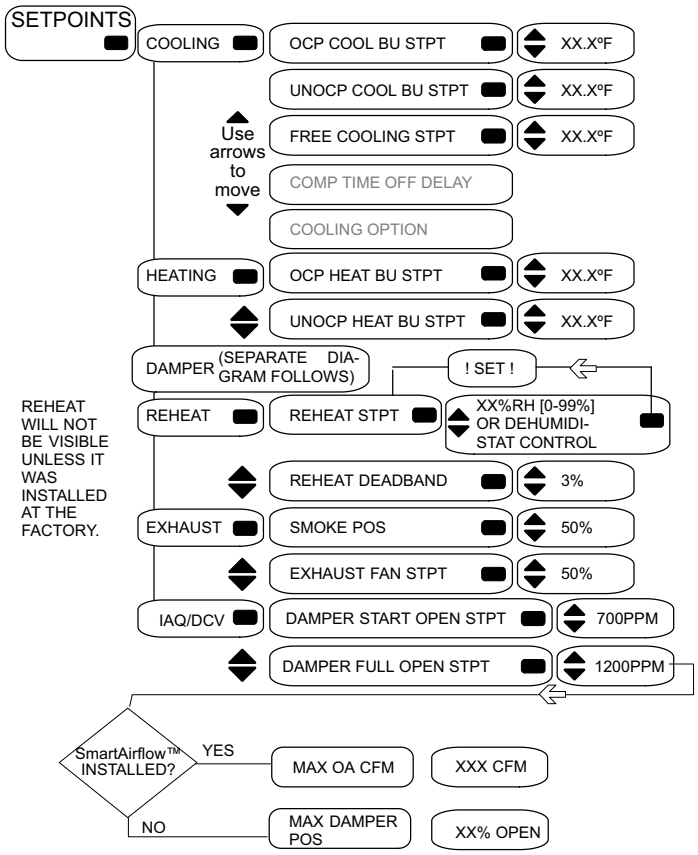

SETTINGS > SETPOINTS > DAMPER

Use SETTINGS > SETPOINTS > DAMPER as shown in the following diagrams; default settings will be used. You may adjust those settings to suit the building's requirements.

NOTE - Early hardware used pots and DIP switches; newer hardware does not.

Early hardware

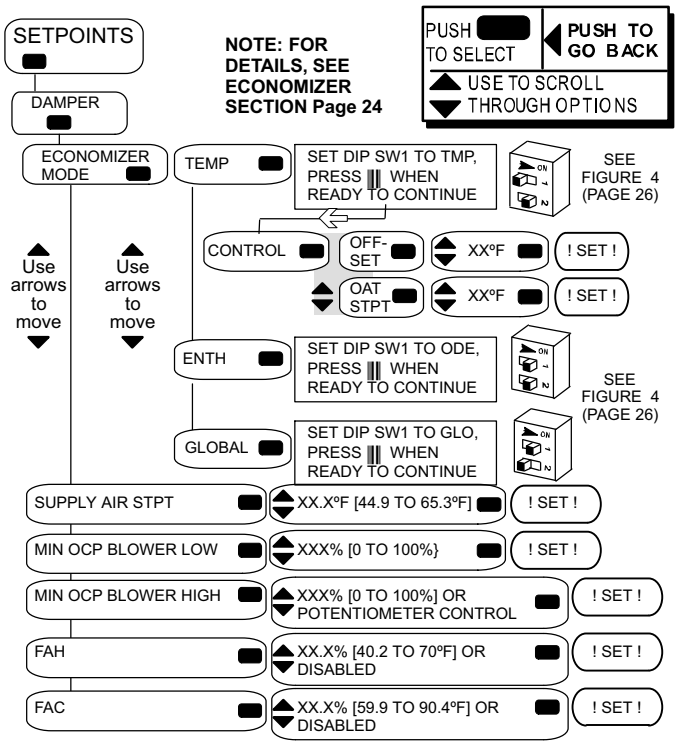

Newer hardware

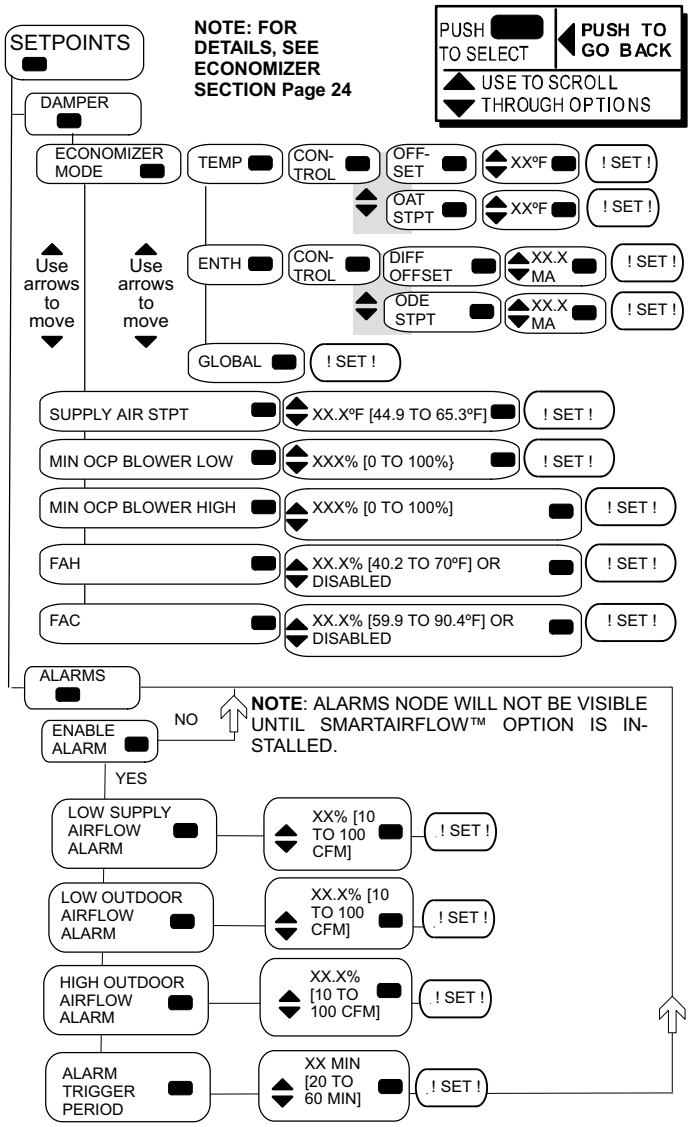

SETTINGS > CONTROL

In the SETTINGS menu, use ▼▲ until CONTROL is displayed. Press ▬ to enter the CONTROL menu access/change system setpoints.

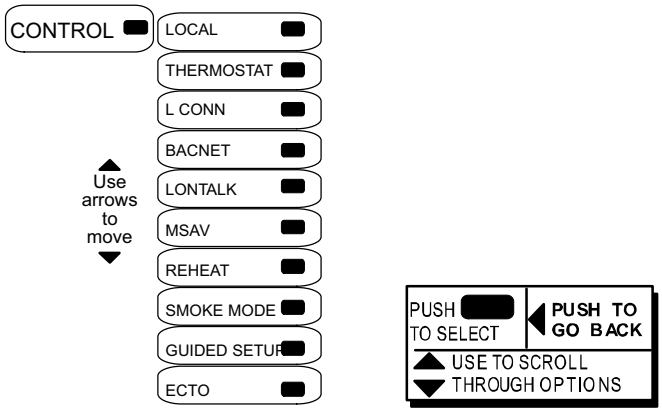

SETTINGS > CONTROL > LOCAL

(Used in absence of thermostat or network control)

Select SETTINGS > CONTROL > LOCAL as shown in the following diagram; default settings will be used. You may adjust those settings to suit the building's requirements.

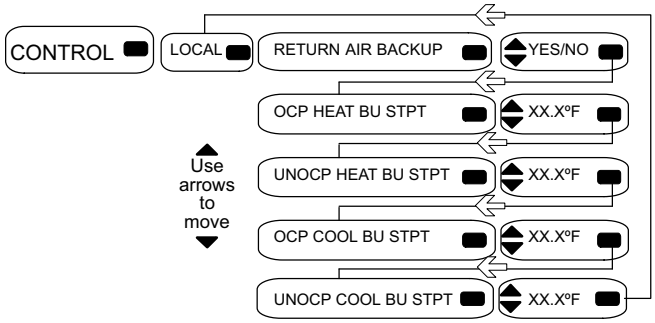

SETTINGS > CONTROL > THERMOSTAT SETUP

Hook up to SmartWire™ thermostat connections. Select SETTINGS > CONTROL > THERMOSTAT and select YES as shown in the following diagram.

SETTINGS > CONTROL (DDC Integration or L CONN [L Connection])

Select SETTINGS > CONTROL > L CONN as shown in the following diagram; default settings will be used. You may adjust those settings to suit the building's requirements.

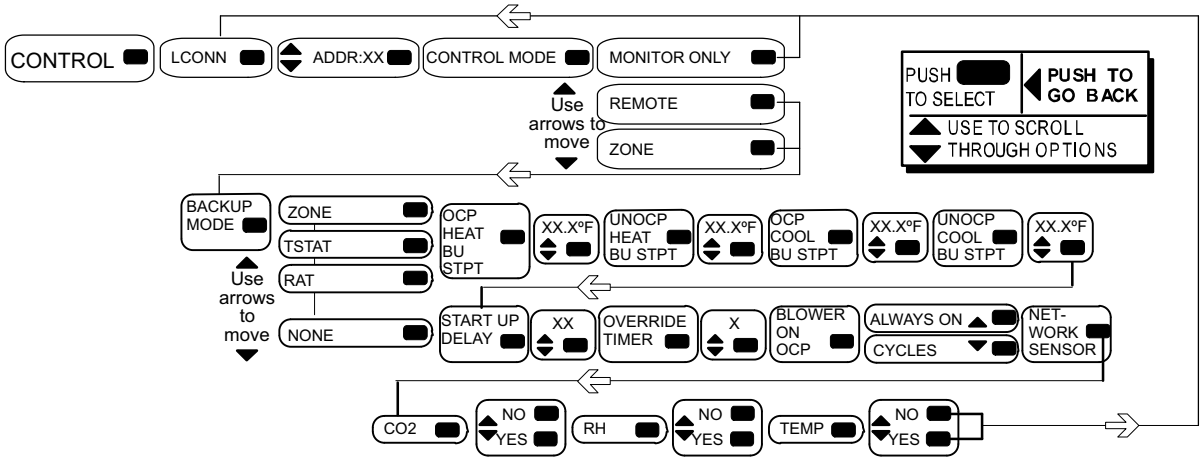

SETTINGS > CONTROL > BACnet

Select SETTINGS > CONTROL > BACnet as shown in the following diagram; default settings will be used. You may adjust those settings to suit the building's requirements. The following diagram shows the BACnet menu's structure and how to make changes.

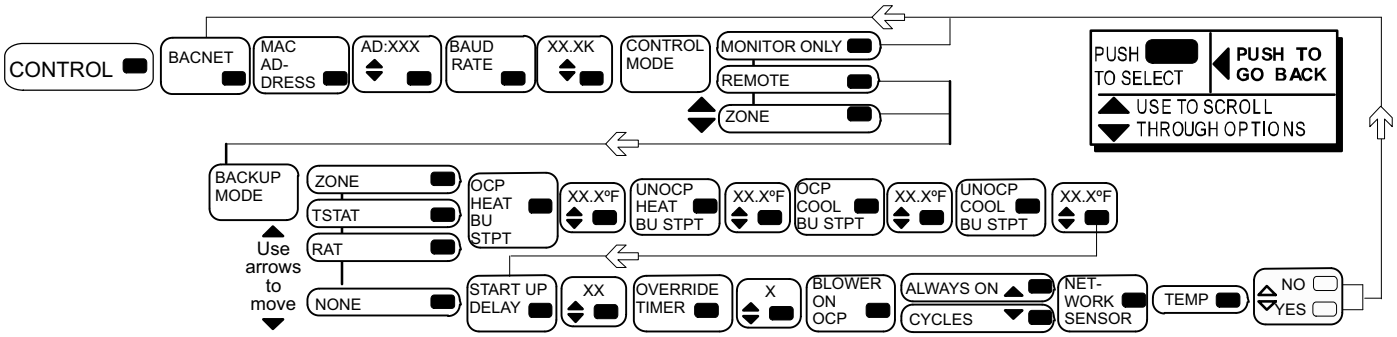

SETTINGS > CONTROL > LonTalk

Select SETTINGS > CONTROL > LonTalk as shown in the following diagram; default settings will be used. You may adjust those settings to suit the building's requirements. The following diagram shows the LonTalk menu's structure and how to make changes.

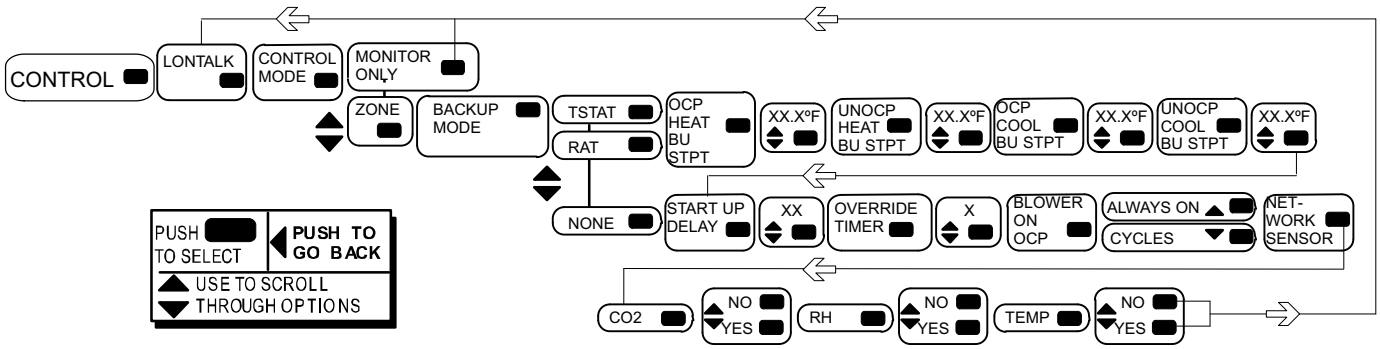

SETTINGS > CONTROL > REHEAT

When you select REHEAT, default settings will be in place. You may adjust those settings to suit the building's requirements. The following diagram shows the REHEAT menu's structure and illustrates how to use the controls to make changes.

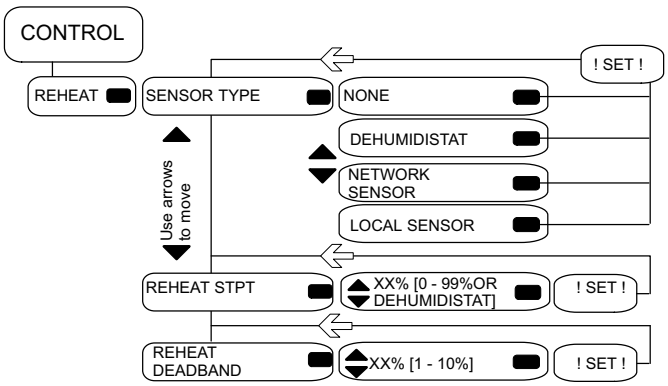

SETTINGS > CONTROL > MSAV (Multi-stage air volume)

Select SETTINGS > CONTROL > MSAV as shown in the following diagram; default settings will be in place. You may adjust those settings to suit the building's requirements. The following diagram shows the MSAV menu's structure and illustrates how to use the controls to make changes.

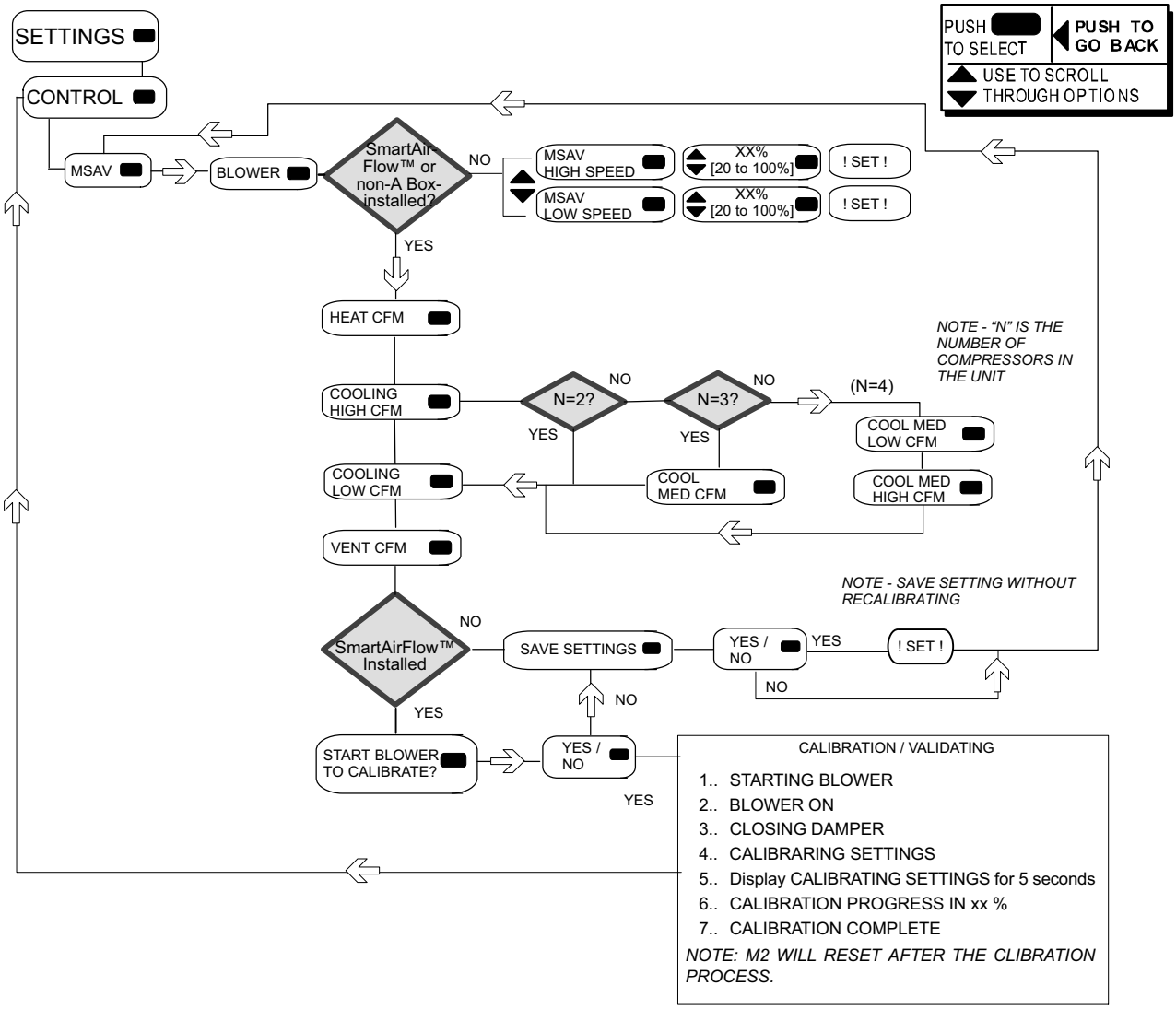

SETTINGS > CONTROL > MSAV > DAMPER (Multi-stage air volume)

Select SETTINGS > CONTROL > MSAV > DAMPER as shown in the following diagram; default settings will be in place. You may adjust those settings to suit the building's requirements. The following diagram shows the MSAV menu's structure and illustrates how to use the controls to make changes.

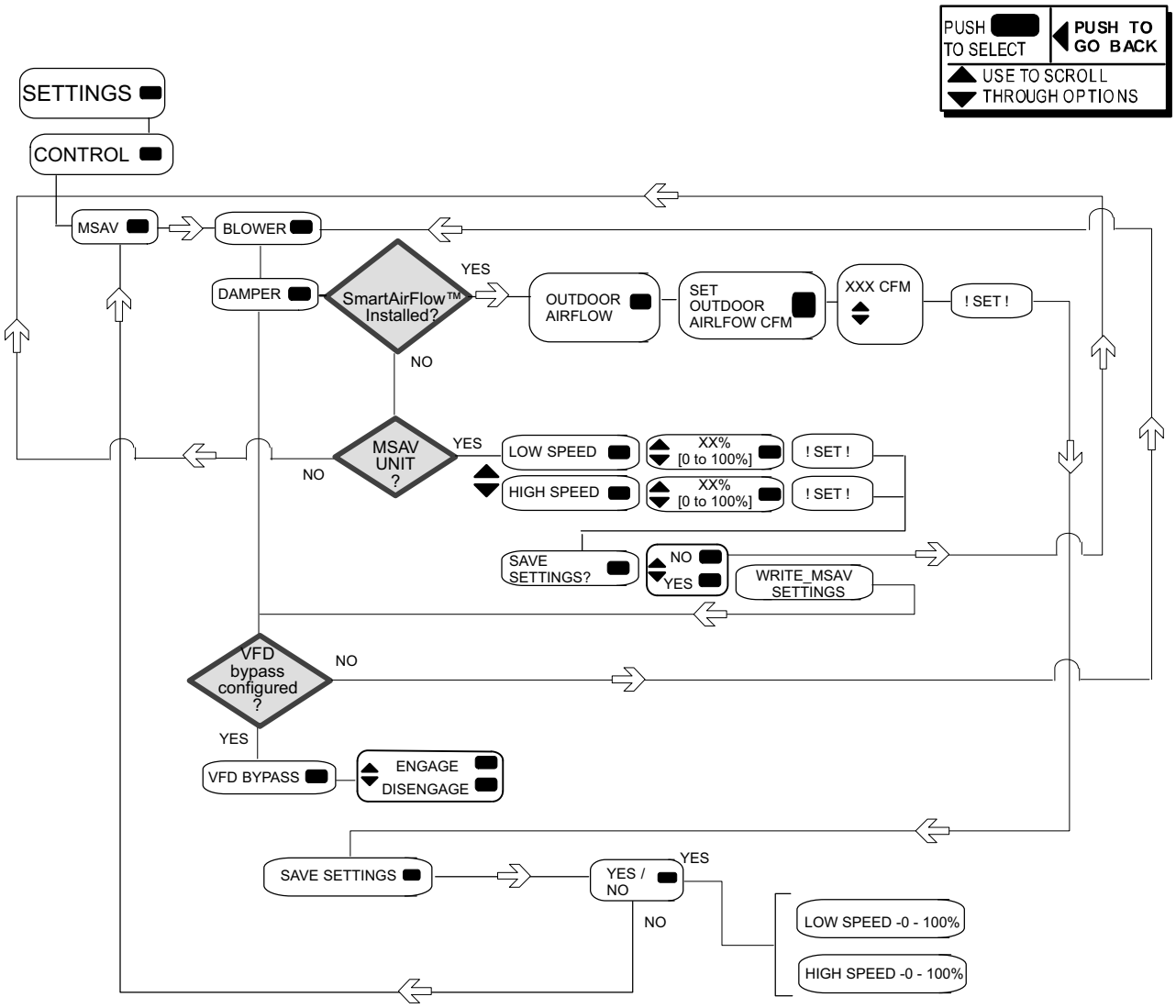

SETTINGS > CONTROL > SMOKE MODE

When you select SMOKE MODE, default settings will be in place. You may adjust those settings to suit the building's requirements. The following diagram shows the SMOKE MODE menu's structure and illustrates how to use the controls to make changes.

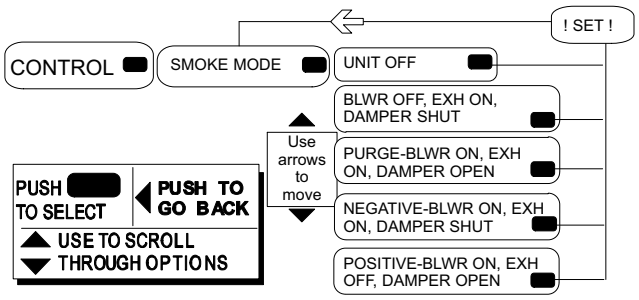

SETTINGS > CONTROL > ECTO

When you select ECTO, default settings will be in place. You may adjust those settings to suit the building's requirements. The following diagram shows the ECTO menu's structure and illustrates how to use the controls to make changes.

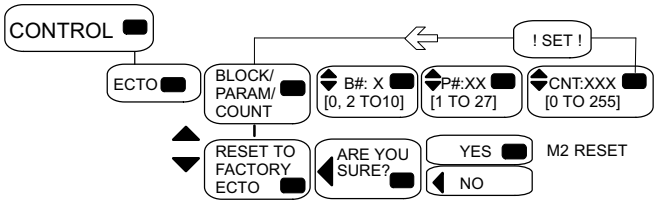

THE BLOCK, PARAMETER, AND COUNT RANGES SHOWN HERE ARE LIMITS AND WILL BE RESTRICTED IN SOME CASES.

EXAMPLE: When told to set ECTO 6.27=1 navigate to SETTINGS > CONTROL > ECTO > BLOCK/PARAM/COUNT>B# and enter 6. At P# enter 27. At CNT: enter 1. Display shows flashing "!SET!", and returns to BLOCK/PARAM/COUNT for another change. When changes are done, use the left arrow to back out of the CONTROL menu, and UPDATING SETTINGS is shown while changes are made, and then M2 resets to use the new values.

SETTINGS > INSTALL > (all except NEW M2)

Use SETTINGS > INSTALL as shown in the following diagram; default settings will be used. Use menu to change language used, and ancillary components installed. An expert manual and service software are available for more complex installations (see Table 7, Page 27). If any alarms are present, take corrective action prior to installation.

UPDATE DISPLAY SOFTWARE menu only appears in DB1 versions that do not end in "H". If the display does not have a HOST boot-loader (indicated by the H), then a Windows PC and USB cable (A-to-A, or with B-to-A adapter) are needed to perform firmware upgrade on DB1.

NOTE - The M2 should be reset in order for changes to be updated within the controller.

Use INSTALL > FLOAT SWITCH to set up a condensate pan overflow switch. Use INSTALL > UPDATE DISPLAY SOFTWARE to install new display software.

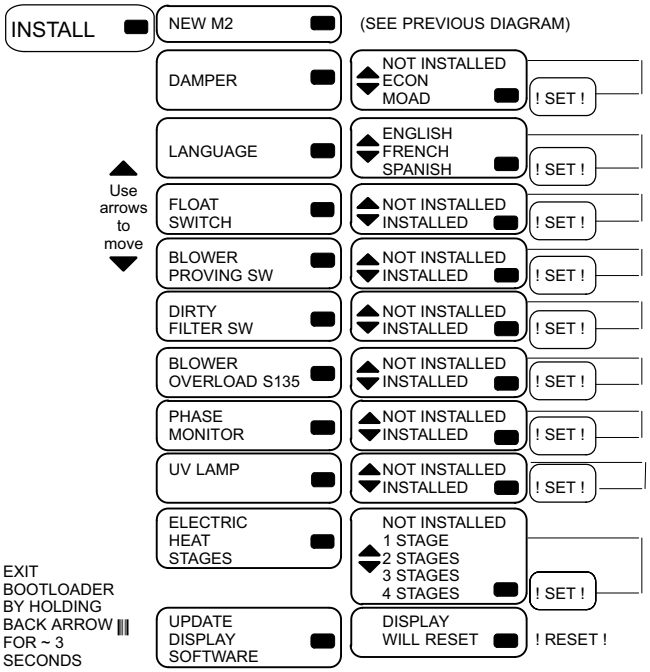

SETTINGS > INSTALL > NEW M2

Use SETTINGS > INSTALL > NEW M2 to go through the setup and change settings as needed when installing a replacement M2 (new M2 units have no factory pre-sets).

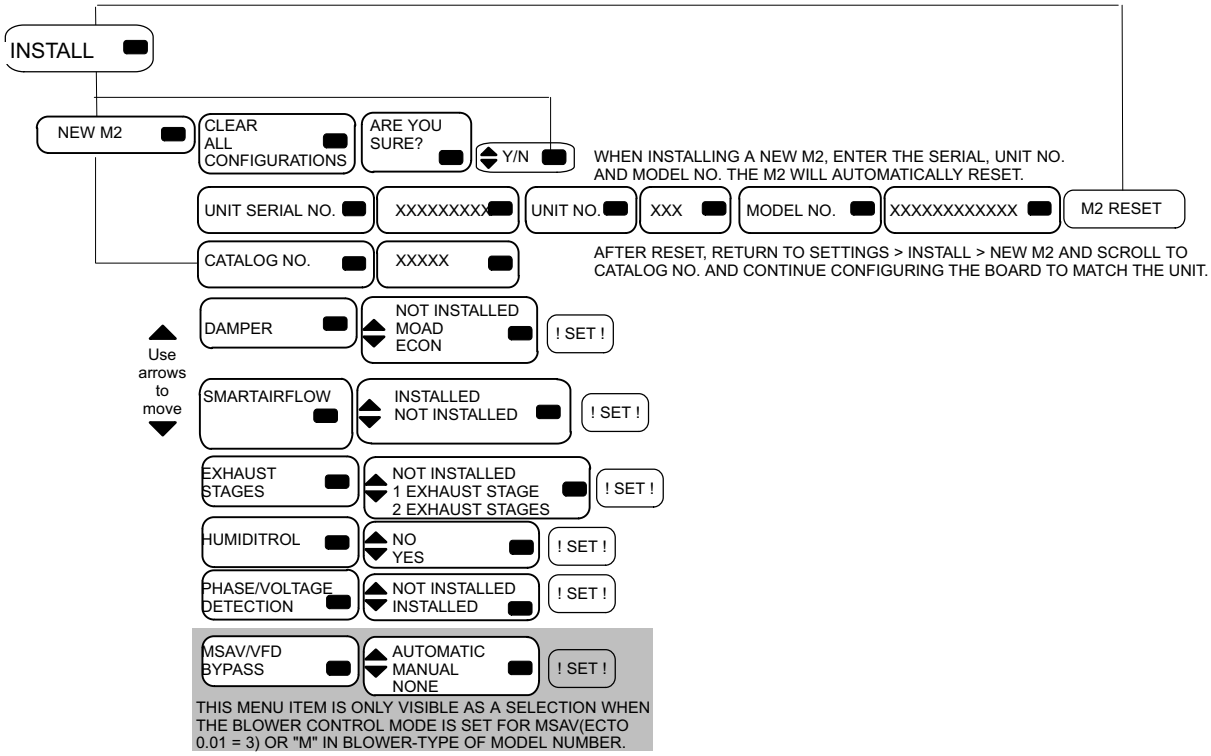

Blower Operation with Occupancy and CEC Title 24

The blower runs to service heat and cool demands, regardless of the space occupancy. But when there is no heating or cooling demand there are options for how the blower should operate in conjunction with occupancy signals to keep the space ventilated, or the air stirred.

In **SETTINGS>CONTROL** menus the option for **BLOWER ON OCP** is selected as **CYCLES** or **ALWAYS ON**. These correspond to ECTO 6.17 settings of 0 or 1, respectively. These settings govern whether the blower runs continuously when the space is considered occupied (=1), or cycles on/off with the heating and cooling demand (=0). ECTO 6.17 only applies to the room sensor control modes, and not to the local or network thermostat modes. In those modes the blower is controlled by the **G** thermostat or DDC signal.

To comply with the California Energy Commission Title 24 standard there are two additional blower/occupancy settings that are set directly by changing ECTO 6.17 from the **SETTINGS>CONTROL>ECTO** menu. These two additional options are available when using *LonTalk* or *BACnet* networks that supply a room occupancy signal (in addition to the scheduled occupancy). The same two options are also available when using the *Lennox L Connection* network with comfort sensors that have added an optional room occupancy sensor. If a room occupancy sensor is not installed and configured on the network, then options 0 and 1 for ECTO 6.17 as previously described should continue to be used.

The two new ECTO 6.17 options for CEC Title 24 are:

- **ECTO 6.17 = 2**: Blower runs when both the occupancy scheduler and the room occupancy sensor indicate that the space is occupied.
- **ECTO 6.17 = 3**: Same as option 2, but the blower also runs for 30 minutes and is OFF for 90 minutes when the occupancy scheduler indicates occupied but the room occupancy sensor indicates that the space is not occupied.

Economizer (Damper)

General

The economizer, when configured, controls

- damper position, which determines how much outdoor air is used to meet free cooling or indoor air quality (IAQ) requirements, and
- the optional power exhaust fans.

On a cooling demand, outdoor air is used for free cooling instead of first-stage compressor(s) when outdoor air is suitable (OAS).

Outdoor Air Suitable (OAS) LED (Early M2 hardware)

A yellow LED which is labeled OAS provides economizer status. A steady yellow LED indicates that outdoor air is suitable for free cooling. A flashing yellow OAS light indicates the IAQ sensor requires outdoor air. (A flashing yellow LED can also mean that the economizer dampers are open to bring in fresh air while a compressor is on.) If the economizer is already operating, a flashing yellow OAS light indicates the IAQ sensor requires more outdoor air than is suitable for free cooling.

DIP Switch Settings (Early M2 hardware)

The DIP switch setting determines the mode used to enable free cooling. The DIP switch also has a mode to set the damper minimum position and test damper operation. DIP switch is factory-set when the economizer is factory-configured.

Free Cooling Discharge Air Setpoint

When outdoor air conditions are suitable and economizer is set to provide free cooling, dampers will modulate to achieve a discharge air temperature of 55°F (13°C) default. This setpoint is adjustable between 45° and 65°F.

The setpoint can also be automatically increased when outdoor or return air temperatures drop. See Outdoor Air Reset and Return Air Reset in the Discharge Air Control section in the *Prodigy Application Guide (Advanced Features)* manual. These settings must be enabled and adjusted using the Prodigy CONTROL/ECTO menu to make changes to ECTO values. Refer to the Prodigy Application Guide. The unit does not have to be operating in discharge air cooling mode to adjust the free cooling discharge air setpoint, or to use setpoint reset.

During free cooling operation, the damper modulates to maintain a discharge air temperature equal to the free cooling discharge air setpoint. If the damper has been continuously at its maximum open position for at least three minutes, then a second stage cooling demand will be allowed to turn on the first stage of mechanical cooling. While the mechanical cooling is on, the damper is held to its maximum position, and does not modulate until the second stage demand is satisfied. On a third stage cooling demand, the second stage of mechanical cooling will be turned on.

Outdoor Air Suitability

There are five modes which can be used to determine if the outdoor conditions will enable free cooling.

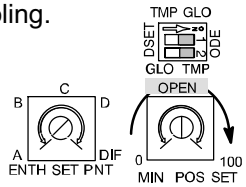

- Old hardware: DIP switch is set to ODE (Outdoor Enthalpy), and the Enthalpy Setpoint potentiometer is set A-through-D.
- New hardware: Configuration is set to Single Enthalpy Economizer Control and ECTO 6.26 setpoint value is set to between 12 and 19mA, 150 to 240 counts.

Enthalpy Setpoint

This setting pertains to the ODE free cooling mode only. The M2 will enable free cooling when outdoor air enthalpy (A7) is less than the enthalpy setpoint. Table 5 shows the approximate enthalpy setpoints for each potentiometer setting at 50% relative humidity. The ECTO 6.26 column is the correlating values used in the new hardware.

Example:—At setting “A”, the enthalpy control will modulate dampers open when outdoor air is at 73°F and 50% relative humidity. If space temperatures are too warm, rotate the potentiometer to “B” (old hardware) or enter a count of 173 (ECTO 6.26 if new hardware). The enthalpy control will now modulate dampers open when outdoor air is 70°F and 50% relative humidity.

NOTE - When in outdoor enthalpy mode, a value between 130-240 counts is entered. When in differential enthalpy mode a 2mA (or 26 count) difference between outdoor and indoor enthalpy corresponds to about a 3.5°F difference in temperature at constant relative humidity (or about a 12%RH difference at constant temperature). When in differential enthalpy mode, a value between 0-75 counts is entered.

Table 5. Enthalpy Control Setpoints

	Control Setting	Enthalpy Control Setpoint At 50% Relative Humidity Approximate Degrees F (C)	ECTO 6.26 cnt (mA)
The recommended enthalpy setpoint is “A”. If the economizer is allowing air which is too warm or too humid to enter the system, the enthalpy control may be changed to a lower setting (B, C, or D).	A	73 (23)	150 (11.8)
	B	70 (21)	173 (13.6)
	C	67 (19)	199 (15.5)
	D	63 (17)	224 (17.6)

Economizer (Damper) (Continued)

There are six options available to determine outdoor air suitability (OAS) for free cooling. See table 6. Economizer settings are shown for each mode in figure 4.

The appropriate sensors are provided when the economizer is factory-configured. When the economizer is field-configured, the ODE mode requires additional field-provided sensor(s). See table 6. The TEMP mode uses sensors provided with all units.

Table 6. Free Cooling Options

Free cooling mode	DIP SW positions	MODE Selection	CONTROL Selection	OAS Setpoint Calculation
	Older M2 Hardware	Newer M2 Hardware		
Temperature offset	1,2 to TMP	TEMP	OFFSET	OAT<RAT-OFFSET (0 to 40 F)
Temperature setpoint	1,2 to TMP	TEMP	OAT STPT	OAT<OAT STPT (41 to 75 F)
Remote	1,2 to TMP	TEMP	ANY	OAS sent by network.
Enthalpy differential (Potentiometer set to DIFF) for old hardware, or ECTO 6.26 = 0 to 75 counts for OFFSET in new hardware. Old hardware does not use an OFF-SET.	1,2 to ODE	ENTH	N/A	ODE<IDE (old hardware) or ODE < IDE - OFFSET (new hardware)
Enthalpy setpoint (Potentiometer set to A-D) for old hardware, or ECTO 6.26 = 130 to 240 counts for new hardware.	1,2 to ODE	ENTH	N/A	ODE<POT (old hardware) or ODE < ECTO 6.26 (new hardware)
Global input	1,2 to GLO	GLOBAL	N/A	GLO input

Mode	Outdoor air is suitable for free cooling when:
TEMP OFFSET	Outdoor air temperature (RT17) is less than return air temperature (RT16) by at least the OFFSET value.
TEMP OAT STPT	Outdoor air temperature (RT17) is less than the OAT STPT value.
Remote	Either of the TEMP modes can be used when a network OAS signal is provided by an energy management or building control system, via BACnet, LonTalk, or L Connection. The network can command OAS, NOT OAS, or AUTO. AUTO returns to local control of OAS, which is the selected TEMP mode..
ENTH (differential)	Outdoor air enthalpy* (A7) is less than return air enthalpy (A62) by at least the OFFSET value. (There is no OFFSET value in old hardware.)
ENTH (setpoint)	Outdoor air enthalpy (A7) is less than enthalpy setpoint potentiometer position A, B, C, or D (for old hardware), or less than ECTO 6.26 STPT value (new hardware).
GLOBAL	Global input is energized by (P297-9). This setting is also used for outdoor air damper applications. Global input also brings on the blower. (This mode is NOT used when OAS signal is provided via network connection. GLO is only used when a 24VAC signal is used to energize the P297-9 GLO input.)
Enthalpy includes effects of both temperature and humidity.	

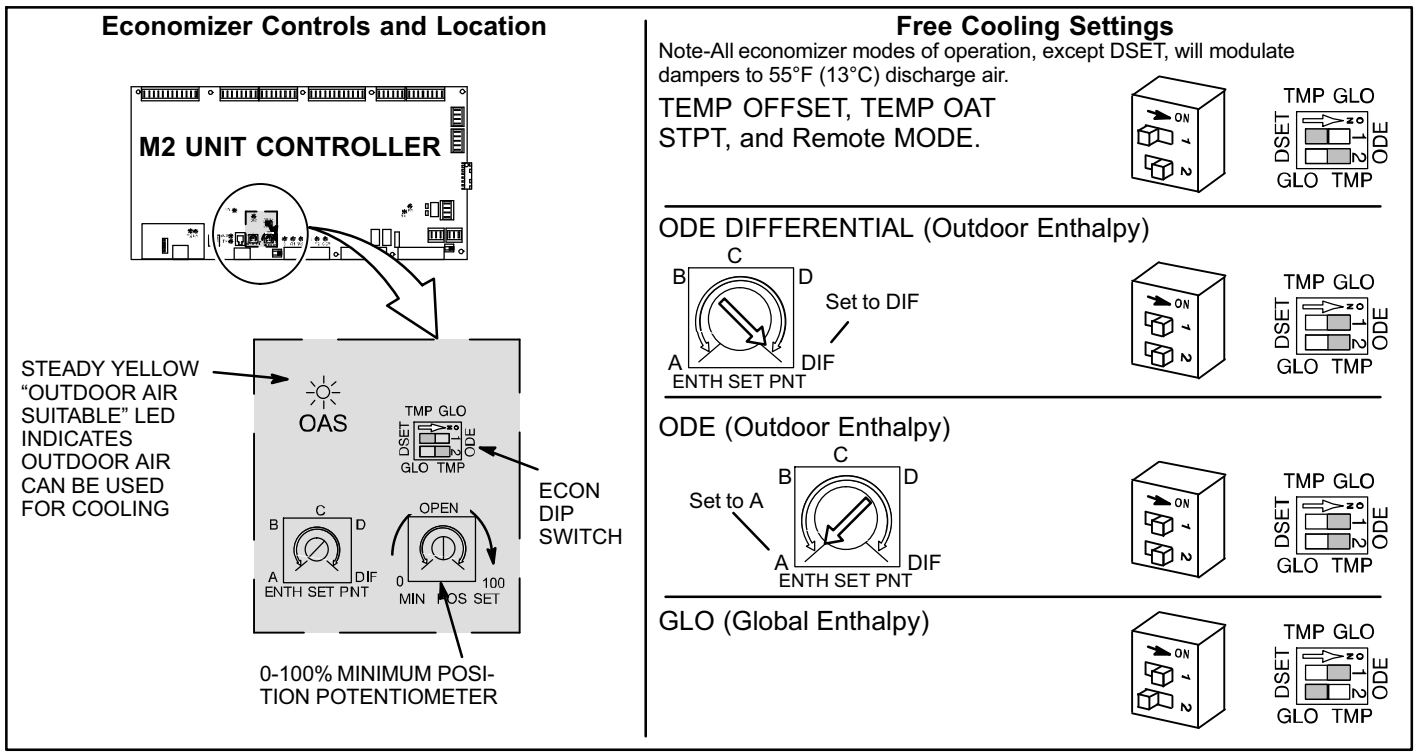

Figure 4. Economizer controls and free cooling settings (Early M2 Hardware)

Abbreviations

A55	M2 board. Main controller board for RTU
A59	C2 board. Second compressor add-on board
A133	GP1 Board. General purpose add-on board DIP selects 3 functions
AI	Analog input
AO	Analog output
BL	Blower
BRPM	Blower RPM
C2	2nd compressor add-on board (A59)
C1	1st stage cooling
C2	2nd stage cooling
C3	3rd stage cooling
C4	4th stage cooling
CAI	Combustion air inducer
CAVB	Constant air volume with bypass damper
COM	Electrical common
CLK	Clock
CP1	Compressor 1
CP2	Compressor 2
CP3	Compressor 3
CP4	Compressor 4
CSP	Cooling setpoint
DAC	Discharge (supply) air control
DACC	Discharge (supply) air control cooling
DACH	Discharge (supply) air control heating
DAP	Discharge (supply) air pressure
DAT	Discharge (supply) air temperature
DB	Deadband
DCV	Demand controlled ventilation
DDC	Direct Digital Controller
DI	Digital input
Diff	Differential
DIP	DIP switch
DPOS	Damper position
DO	Digital output
ECON	Economizer
ECTO	Electronic configure to order (control parameters)
FAC	Fresh air cooling control
FAH	Fresh air heating control
FAT	Fresh air tempering control. See FAC & FAH
FC	Free cooling
G	Thermostat demand, blower
GLO	Global mode or input (economizer)
GP1	General purpose board GP1-1 (A133)
H1	1st stage heating
H2	2nd stage heating
H3	3rd stage heating
H4	4th stage heating
HP1	Heat pump add-on board (A61)
HP	High pressure
HSP	Heating setpoint
HT	Heating
IAQ	Indoor air quality. Often synonymous with CO_2 level in ppm
IDE	Indoor enthalpy. Depends on temperature and humidity
IE	Indoor enthalpy.
“w.c.	Inches of water column
LCONN	L Connection
LED	Light emitting diode. An indicator light, found either as individual elements or grouped together as segments to form characters
LP	Low pressure
LT	Limit
M2	Main M2 unit controller board (A55).
MCB1	Motor control board
MGV	Modulating gas valve
MOAD	Motorized outdoor air damper
MSAV	Multi Stage Air Volume
OAC	Outdoor air control
OAS	Outdoor air suitable for free cooling
OAT	Outdoor air temperature
OCP	Thermostat demand, occupied mode
ODE	Outdoor enthalpy. Depends on temperature and humidity
OE	Outdoor enthalpy.
PID	Proportional, integral and derivative based control loop
PPM	Parts per million (mostly used for CO_2 measurements)
RAP	Return air pressure
RAT	Return air temperature
RH	Relative humidity
RS	Reset
RTU	Roof top unit
RT6	Discharge air temperature sensor
RT16	Return air temperature sensor
RT17	Outdoor air temperature sensor
SMK	Smoke detection mode (alarm)
SP	Setpoint
Stg	Stage
STPT	Setpoint
TB	Terminal block
TSTAT	Thermostat
UNOCP	Unoccupied
USB	Universal Serial Bus, connect to PC or flash drive
W1	Thermostat demand, heat stage 1
W2	Thermostat demand, heat stage 2
W3	Thermostat demand, heat stage 3
W4	Thermostat demand, heat stage 4
VAC	Alternating current voltage
VAV	Variable air volume. Accomplished with a variable frequency drive (VFD)
VDC	Direct current voltage
VFD	Var. frequency drive. An AC inverter used to vary motor speed
VT	Ventilation
Y1	Thermostat demand, cooling stage one
Y2	Thermostat demand, cooling stage two
Y3	Thermostat demand, cooling stage three
Y4	Thermostat demand, cooling stage four
ZAT	Zone air temperature

Table 7. Service parts available for Prodigy® Controller

Description	Catalog number	Description	Catalog number	Description	Catalog number
M2 Unit Controller Replacement kit	59W47	M2 USB service kit tube	59W52	M2 Training board (no suitcase, USB, or M2)	59W56
DB1-1 M2 Display Replacement kit	59W49	M2-1 Display battery (10-pack)	59W53	SmartWire™ Field Termination kit	59W57
MCB1 M2 Motor Control Replacement kit	59W50	M2-1 Fuse (2-Amp ATC, 5-pack)	59W54	Lennox Prodigy USB Memory Stick (5-pack)	59W59
M2 BACnet Replacement kit	59W51	M2 Deluxe Training kit (suitcase, UC, USB kit, expert manual, M2, trainer)	59W55	Service Software & Expert Manual on USB	59W60

USB Service Report Example

```
=========================================================================
USB SERVICE REPORT
=========================================================================
Service Date      1/1/2010
Service Time      12:00:00
Serial No.        5609K00002
M2  Version       7.02.00
DB1Version        1.05.00
Unit No.          2
Sbus Address      2
BACnet Address.   2
CAT No.           NO CN
MODEL NO.         LGH036H4ES1Y
Status            HEATING
=========================================================================
Runtime Data
    Total Power On    1832 HRS        79 CYCLES
    Before Install     286 HRS         -------
    Filter            2040 HRS         -------
    Belt              1063 HRS         -------
    Blower            1162 HRS       131 CYCLES
    Compressor 1        46 HRS        66 CYCLES
    Compressor 2        14 HRS        17 CYCLES
    Compressor 3         0 HRS         0 CYCLES
    Compressor 4         0 HRS         0 CYCLES
    Outdoor Fan 1       14 HRS        32 CYCLES
    Outdoor Fan 2        0 HRS         2 CYCLES
    Outdoor Fan 3        0 HRS         0 CYCLES
    Outdoor Fan 4        0 HRS         0 CYCLES
    Outdoor Fan 5        0 HRS         0 CYCLES
    Outdoor Fan 6        0 HRS         0 CYCLES
    Heat Stage 1        96 HRS        17 CYCLES
    Heat Stage 2        96 HRS        16 CYCLES
    Reheat               0 HRS        13 CYCLES
    Free Cooling        42 HRS      1608 CYCLES
    UV Lamp           2368 HRS          -------
=========================================================================


Sensor Data
    OAT :  80 degF
    RAT :  76 degF
    DAT :  69 degF
    ZAT :  59 degF
    RH  :  34 %
    CO2 : 415 ppm
=========================================================================


Alarm/Status Log
    ( 58) 12.14.2009 12:07:15  HEAT 1 NO PROOF GAS VALVE GV1
    ( 85) 12.14.2009 12:03:24  INCORRECT HUMIDITROL SETTINGS
    ( 82) 12.14.2009 12:03:24  CONTROLLER RESET
    ( 95) 12.09.2009 19:54:37  SETTINGS HAVE CHANGED
    (120) 12.09.2009 18:52:54  ADD-ON BOARD MCB PROBLEM
=========================================================================
END OF REPORT
```

USB Service Report Example (If SmartAirflow™ is Installed)

```
=====================================================================
==
USB SERVICE REPORT
=====================================================================
==
Service Date      10/26/2009
Service Time      16:28:05
Serial No.        5609K00002
M2  Version       7.00.00
DB1Version        1.03
Unit No.          2
Sbus Address      1
BACnet Address.   1
CAT No.           NO CN
MODEL NO.         LGH036H4ES1P
Status            IDLE
=====================================================================
==
Runtime Data
    Total Power On     666 HRS                46 CYCLES
    Before Install     286 HRS           -------
    Filter             661 HRS           -------
    Belt               373 HRS           -------
    Blower             473 HRS               100 CYCLES
    Compressor 1        46 HRS                58 CYCLES
    Compressor 2        14 HRS                17 CYCLES
    Compressor 3         0 HRS                 0 CYCLES
    Compressor 4         0 HRS                 0 CYCLES
    Outdoor Fan 1       14 HRS                24 CYCLES
    Outdoor Fan 2        0 HRS                 2 CYCLES
    Outdoor Fan 3        0 HRS                 0 CYCLES
    Outdoor Fan 4        0 HRS                 0 CYCLES
    Outdoor Fan 5        0 HRS                 0 CYCLES
    Outdoor Fan 6        0 HRS                 0 CYCLES
    Heat Stage 1         4 HRS                11 CYCLES
    Heat Stage 2         4 HRS                12 CYCLES
    Humiditrol           0 HRS                 5 CYCLES
    Free Cooling        42 HRS              1608 CYCLES
    UV Lamp            751 HRS           -------
=====================================================================
==
Sensor Data
    OAT :  80 degF
    RAT :  76 degF
    DAT :  69 degF
    ZAT :  59 degF
    RH  :  34 %
    CO2 : 415 ppm
```

```
=====================================================================
SmartAirflow

    Calibrated on 9/27/2012 13:10:49

    Supply Airflow Calibration Table
    ------------------------------------
    PWM(%)   Speed(rpm)    Airflow(cfm)
    ------------------------------------
    20        350          715
    30        470          810
    40        590          907
    50        670         1079
    60        780         1265
    70        860         1423
    80        950         1680
    90        1160        1839
    96        1250        2198

    Supply Airflow Targets
    ------------------------------------------
    Mode        Desired Airflow(cfm)PWM(%)
    -------------------------------------
    Cool High        1950            94
    Cool Low         1200            56
    Cool Med High    1800            91
    Cool Med Low     1500            75
    Heat             1900            93
    Ventilation      1300            64
    Smoke            2000            95

    Economizer Differential Pressure at maximum Supply Airflow
    ---------------------------------------------
    Damper Position (%)         Diff.Pressure(in.H2O)
    ---------------------------------------------
     0                                0.25
     50                               0.1
     100                              0.05

    Outside Airflow Targets
    ---------------------------------------------
    Minimum Outdoor Air/Minimum DCV: 400 cfm
    Maximum DCV:                     650 cfm
    Minimum CO2:                     500 ppm
    Maximum CO2:                     1200 ppm

=====================================================================
==
Alarm/Status Log
    ( 82)           10.26.2009 16:27:04                     CONTROLLER
RESET
    (  5)           10.26.2009 16:25:13                     BLOWER S52
=====================================================================
==
END OF REPORT
```

USB Service Report Example (If SmartAirflow™ is Calibrated)

```
==========================================================================
USB  SmartAirFlow  Report
==========================================================================
Service Date      07/12/2011
Service Time      11:43:01
Serial No.        5611D09674
M2  Version       7.06.00
DB1Version        1.07.00
Unit No.          0
Sbus Address      2
BACnet Address.   2
CAT No.           N1290
MODEL NO.         LCH092H4BG1G
==========================================================================
    Calibrated on 9/27/2012 13:10:49

    Supply Airflow Calibration Table
    -------------------------------------
    PWM(%)   Speed(rpm)    Airflow(cfm)
    -------------------------------------
    20        350          715
    30        470          810
    40        590          907
    50        670         1079
    60        780         1265
    70        860         1423
    80        950         1680
    90        1160        1839
    96        1250        2198

    Supply Airflow Set Points
    ------------------------------------------------------------------
                   Desired                Actual Airflow        Econ
    Mode           Airflow     PWM(%)  (with Damper Closed)      dP
    ------------------------------------------------------------------
    Cool High        1950       94          1935                0.35"
    Cool Low         1200       56          1185                0.15"
    Cool Med High    1800       91          1805                0.30"
    Cool Med Low     1500       75          1480                0.25"
    Heat             1900       93          1880                0.35"
    Ventilation      1300       64          1275                0.15"
    Smoke            2000       95          1980                0.35"

    Outside Airflow Setpoints
    ---------------------------------------------
    Minimum Outdoor Air/Minimum DCV: 400 cfm
    Maximum DCV:                     650 cfm
    Minimum CO2:                     500 ppm
    Maximum CO2:                     1200 ppm

    Ventilation Calibration (@ Max Supply Airflow)
    ---------------------------------------------------------------
    Damper        Econ       Outdoor        Supply          Supply
    Position      DP       Airflow (CFM)     PWM(%)       Airflow(CFM)
    ---------------------------------------------------------------
      0%       0.30"         30               94              1935
      5%       0.28"         100              94              1920
     10%       0.25"         170              94              1910
     15%       0.22"         240              94              1910
     20%       0.20"         320              94              1905
     25%       0.15"         420              94              1905
     30%       0.20"         655              94              1905
==========================================================================
END OF REPORT
```

Event Code	Table 8. Alarm Codes	
	Display Message	**Action**
0		
1	ALARM(1) ERRATIC POWER	CHECK POWER CONNECTIONS
2	ALARM(2) CHECK SETTINGS	RESET CONTROLLER. CHECK UNIT SETTINGS. CONTACT LENNOX IF PROBLEM PERSISTS.
3	Reserved	
4*	ALARM(4) SMOKE A173	SMOKE MODE. CHECK FOR SOURCE OF SMOKE.
5	ALARM(5) BLOWER S52	UNIT OFF. AIR FLOW SWITCH OPEN 16 SEC AFTER DEMAND. CHECK BLOWER PARTS
6*	ALARM(6) FILTER S27	REPLACE FILTER OR CHECK FILTER SWITCH S27
7	ALARM(7) CONTROLLER PROBLEM	RESET CONTROLLER. CHECK UNIT SETTINGS. CONTACT LENNOX IF PROBLEM PERSISTS.
8*	ALARM(8) STRIKE 3 ON BLOWER S52	LOCKOUT. MULTIPLE CODE 5. CHECK BLOWER PARTS
9 - 11	Reserved	
12	ALARM(12) COMP 1 HIGH PRESS S4	COMP OFF. CHECK CHARGE, FANS, COIL.
13*	ALARM(13) STRIKE 3 ON COMP 1 HIGH PRESS S4	COMP LOCKOUT. CHECK CHECK CHARGE, FANS, COIL. USE SERVICE MENU TO CLEAR LOCKOUTS.
14	ALARM(14) COMP 2 HIGH PRESS S7	COMP OFF. CHECK CHARGE, FANS, COIL.
15*	ALARM(15) STRIKE 3 ON COMP 2 HIGH PRESS S7	COMP LOCKOUT. CHECK CHECK CHARGE, FANS, COIL. USE SERVICE MENU TO CLEAR LOCKOUTS.
16	ALARM(16) COMP 3 HIGH PRESS S28	COMP OFF. CHECK CHARGE, FANS, COIL.
17*	ALARM(17) STRIKE 3 ON COMP 3 HIGH PRESS S28	COMP LOCKOUT. CHECK CHARGE, FANS, COIL. USE SERVICE MENU TO CLEAR LOCKOUTS.
18	ALARM(18) COMP 4 HIGH PRESS S96	COMP OFF. CHECK CHARGE, FANS, COIL.
19*	ALARM(19) STRIKE 3 ON COMP 4 HIGH PRESS S96	COMP LOCKOUT. CHECK CHECK CHARGE, FANS, COIL. USE SERVICE MENU TO CLEAR LOCKOUTS.
20	ALARM(20) UNIT SHUTDOWN A42	CHECK PHASE MONITOR
21*	ALARM(21) STRIKE 3 UNIT SHUTDOWN A42	CHECK PHASE MONITOR
22	ALARM(22) COMP 1 LOW PRESS S87	COMP OFF. CHECK CHARGE, FILTERS, AIR FLOW. COIL
23*	ALARM(23) STRIKE 3 ON COMP 1 S87	COMP LOCKOUT. CHECK CHECK CHARGE, FILTER, AIR FLOW, COIL. USE SERVICE MENU TO CLEAR LOCKOUTS.
24	ALARM(24) COMP 2 LOW PRESS S88	COMP OFF. CHECK CHARGE, FILTERS, AIR FLOW. COIL
25*	ALARM(25) STRIKE 3 ON COMP 2 S88	COMP LOCKOUT. CHECK CHECK CHARGE, FILTER, AIR FLOW, COIL. USE SERVICE MENU TO CLEAR LOCKOUTS.
26	ALARM(26) COMP 3 LOW PRESS S98	COMP OFF. CHECK CHARGE, FILTERS, AIR FLOW. COIL
27*	ALARM(27) STRIKE 3 ON COMP 3 S98	COMP LOCKOUT. CHECK CHECK CHARGE, FILTER, AIR FLOW, COIL. USE SERVICE MENU TO CLEAR LOCKOUTS.
28	ALARM(28) COMP 4 LOW PRESS S97	COMP OFF. CHECK CHARGE, FILTERS, AIR FLOW. COIL
29*	ALARM(29) STRIKE 3 ON COMP 4 S97	COMP LOCKOUT. CHECK CHECK CHARGE, FILTER, AIR FLOW, COIL. USE SERVICE MENU TO CLEAR LOCKOUTS.
30	ALARM(30) CHECK 2 AMP FUSE UNIT SHUTDOWN S149	CHECK OVERFLOW SW
31*	ALARM(31) STRIKE 3 UNIT SHUTDOWN S149	CHECK OVERFLOW SW
32	ALARM(32) COMP 1 FRZSTAT OPEN S49	COMP OFF. CHECK FRZSTAT, AIR FLOW, CHARGE, COIL, FILTER, OUTSIDE TEMP
33*	ALARM(33) STRIKE 3 COMP 1 FRZSTAT OPEN S49	COMP LOCKOUT. CHECK FRZSTAT, AIR FLOW, CHARGE, COIL, FILTER, OUTSIDE TEMP
34	ALARM(34) COMP 2 FRZSTAT OPEN S50	COMP OFF. CHECK FRZSTAT, AIR FLOW, CHARGE, COIL, FILTER, OUTSIDE TEMP
35*	ALARM(35) STRIKE 3 COMP 2 FRZSTAT OPEN S50	COMP LOCKOUT. CHECK FRZSTAT, AIR FLOW, CHARGE, COIL, FILTER, OUTSIDE TEMP
36	ALARM(36) COMP 3 FRZSTAT OPEN S53	COMP OFF. CHECK FRZSTAT, AIR FLOW, CHARGE, COIL, FILTER, OUTSIDE TEMP
37*	ALARM(37) STRIKE 3 COMP 3 FRZSTAT OPEN S53	COMP LOCKOUT. CHECK FRZSTAT, AIR FLOW, CHARGE, COIL, FILTER, OUTSIDE TEMP
38	ALARM(38) COMP 4 FRZSTAT OPEN S95	COMP OFF. CHECK FRZSTAT, AIR FLOW, CHARGE, COIL, FILTER, OUTSIDE TEMP
39*	ALARM(39) STRIKE 3 COMP 4 FRZSTAT OPEN S95	COMP LOCKOUT. CHECK FRZSTAT, AIR FLOW, CHARGE, COIL, FILTER, OUTSIDE TEMP
40	ALARM(40) RETURN AIR OVER HEAT LIMIT RT16	HEAT ABOVE SETPOINT. CHECK SPACE CONDITIONS OR SENSOR
41	ALARM(41) RETURN AIR UNDER COOL LIMIT RT16	COOL BELOW SETPOINT. CHECK SPACE CONDITIONS OR SENSOR
42	ALARM(42) CHECK 2 AMP FUSE UNIT SHUTDOWN S42 OR S135	CHECK EXT MTR OVERLOADS
43*	ALARM(43) STRIKE 3 UNIT SHUTDOWN S42 OR S135	CHECK EXT MTR OVERLOADS

Event Code	Table 8. Alarm Codes	
	Display Message	**Action**
44*	ALARM(44) GAS VALVE ON NO DEMAND GV1	UNIT OFF. GV1 POWER BUT NO DEMAND. CHECK GAS PRESS, GAS VALVE
45*	ALARM(45) GAS VALVE ON NO DEMAND GV3	UNIT OFF. GV3 POWER BUT NO DEMAND. CHECK GAS PRESS, GAS VALVE
46 - 48	Reserved	
49*	ALARM(49) NO 24VAC ON A59 (C2) BOARD	THIRD AND FOURTH COMPRESSORS ARE OFF.
50	ALARM(50) PRIMARY HEAT 1 LIMIT OPEN S10	HEAT SECT 1 PRIMARY HEAT LIMIT OPEN. CHECK AIR FLOW, LIMIT, AND WIRING.
51*	ALARM(51) STRIKE 3 PRIMARY HEAT 1 LIMIT OPEN S10	HEAT SECT 1 PRIMARY HEAT LIMIT OPEN. CHECK AIR FLOW, LIMIT, AND WIRING.
52	ALARM(52) SECONDARY HEAT 1 LIMIT OPEN S21	HEAT SECT 1 SECONDARY HEAT LIMIT OPEN. CHECK AIR FLOW, LIMIT, AND WIRING.
53*	ALARM(53) STRIKE 3 SECONDARY HEAT 1 LIMIT OPEN S21	HEAT SECT 1 SECONDARY HEAT LIMIT OPEN. CHECK AIR FLOW, FILTER, LIMIT, AND WIRING.
54	ALARM(54) HEAT 1 ROLL OUT OPEN	HEAT SECT 1 CHECK GAS ROLL OUT S47
	ALARM(54) HEAT 1 S15 LIMIT OPEN	HEAT SECT 1 LIMIT OPEN. CHECK AIR FLOW, LIMIT, AND WIRING.
55*	ALARM(55) STRIKE 3 HEAT 1 ROLL OUT OPEN	HEAT SECT 1 CHECK GAS ROLL OUT S47
	ALARM(55) STRIKE 3 HEAT 1 S15 LIMIT OPEN	HEAT SECT 1 LIMIT OPEN. CHECK AIR FLOW, LIMIT, AND WIRING.
56	ALARM(56) HEAT 1 CAI SWITCH S18	HEAT SECT 1 CHECK COMBUSTION AIR MOTOR & PROOF SWITCH
57*	ALARM(57) STRIKE 3 HEAT 1 CAI SWITCH S18	HEAT SECT 1 OFF CHECK COMBUSTION AIR MOTOR & PROOF SWITCH
58	ALARM(58) HEAT 1 NO PROOF GAS VALVE GV1	HEAT SECT 1 CHECK IGNITION CONTROL, FLAME PROOF, GV1, GAS SUPPLY
59*	ALARM(59) STRIKE 3 NO PROOF GAS VALVE GV1	HEAT SECT 1 CHECK IGNITION CONTROL, FLAME PROOF, GV1, GAS SUPPLY
60	ALARM(60) PRIMARY HEAT 2 LIMIT OPEN S99	HEAT SECT 2 PRIMARY HEAT LIMIT OPEN. CHECK AIR FLOW, LIMIT, AND WIRING.
61*	ALARM(61) STRIKE 3 PRIMARY HEAT 2 LIMIT OPEN S99	HEAT SECT 2 PRIMARY HEAT LIMIT OPEN. CHECK AIR FLOW, LIMIT, AND WIRING.
62	ALARM(62) HEAT 2 LIMIT OPEN S100	HEAT SECT 2 SECONDARY HEAT LIMIT OPEN. CHECK AIR FLOW, LIMIT, AND WIRING.
63*	ALARM(63) STRIKE 3 HEAT 2 LIMIT OPEN S100	HEAT SECT 2 SECONDARY HEAT LIMIT OPEN. CHECK AIR FLOW, FILTER, LIMIT, AND WIRING.
64	ALARM(64) HEAT 2 ROLLOUT OPEN S69	CHECK ROLLOUT SENSOR AND GAS
65*	ALARM(65) STRIKE 3 ROLLOUT OPEN S69	CHECK ROLLOUT SENSOR AND GAS
66	ALARM(66) HEAT 2 CAI SWITCH S45	HEAT SECT 2 CHECK COMBUSTION AIR MOTOR & PROOF SWITCH
67*	ALARM(67) STRIKE 3 HEAT 2 CAI SWITCH S45	HEAT SECT 2 OFF CHECK COMBUSTION AIR MOTOR & PROOF SWITCH
68	ALARM(68) HEAT 2 NO PROOF GAS VALVE GV3	HEAT SECT 2 CHECK IGNITION CONTROL, FLAME PROOF, GV3, GAS SUPPLY
69*	ALARM(69) STRIKE 3 NO PROOF GAS VALVE GV3	HEAT SECT 2 CHECK IGNITION CONTROL, FLAME PROOF, GV3, GAS SUPPLY
70 - 72	Reserved	
73	ALARM(73) NETWORK SENSOR ERROR	CHECK WITH INTEGRATOR FOR REFRESH RATE, NETWORK STATUS LIGHTS AND WIRING
74*	ALARM(74) ZONE SENSOR A2	CHECK ZONE SENSOR AND WIRING
75*	ALARM(75) OUTDOOR TEMP SENSOR RT17	CHECK SENSOR AND WIRING
76*	ALARM(76) CHECK 2 AMP FUSE HUMIDITY SENSOR A91	CHECK SENSOR AND WIRING
77*	ALARM(77) DISCHARGE AIR TEMP SENSOR RT6	CHECK SENSOR AND WIRING
78*	ALARM(78) RETURN AIR TEMP SENSOR RT16	CHECK SENSOR AND WIRING
79*	ALARM(79) ADD-ON BOARD PROBLEM	ADD-ON BRD PROBLEM, RESET TO CLEAR
80	ALARM(80) ADD-ON BOARD PROBLEM	ADD-ON BRD PROBLEM
81	ALARM(81) REHEAT SETUP ERROR	CHECK REHEAT SETTINGS
82	ALARM(82) CONTROLLER RESET	NO ACTION NEEDED
83*	ALARM(83) INCORRECT SETTINGS	CHECK CONFIGURATION
84	Reserved	
85	ALARM(85) INCORRECT HUMIDITROL SETTINGS	CHECK HUMIDITROL SETTINGS
86*	ALARM(86) CONFLICTING TSTAT INPUT	CHECK TSTAT INPUTS FOR SIMULTANEOUS HEAT AND COOL AND WIRING
87	Reserved	
88	ALARM(88) CONTROLLER PROBLEM	INTERNAL CONTROLLER PROBLEM. RESET TO CLEAR.

Event Code	Table 8. Alarm Codes	
	Display Message	**Action**
89	Reserved	
90	ALARM(90) CONTROLLER PROBLEM	INTERNAL CONTROLLER PROBLEM. RESET TO CLEAR.
91*	ALARM(91) OUTDOOR ENTH SENSOR A7	CHECK ECON DIP SWITCH AND ENTH DIAL SETTINGS, SENSOR AND WIRING
92*	ALARM(92) INDOOR ENTH SENSOR A62	CHECK ECON DIP SWITCH AND ENTH DIAL SETTINGS, SENSOR AND WIRING
93*	ALARM(93) BACKUP MODE	CHECK COMM LOSS WITH NETWORK SENSOR
94	ALARM(94) BAD ZONE SENSOR SETPOINT	CHECK SETPOINT AND EMS PROGRAMMING
95	ALARM(95) SETTINGS HAVE CHANGES	SETTINGS HAVE CHANGED AT THE UNIT
96, 97	Reserved	
98	ALARM(98) CONTROLLER PROBLEM	INTERNAL CONTROLLER PROBLEM. RESET TO CLEAR.
99	ALARM(99) OUTDOOR ECON SENSOR A24	CHECK SENSOR AND WIRING
100*	ALARM(100) AIR VOL CONTROL SETUP ERROR	CHECK FOR PROPER INSTALLATION OF GP BOARD AND SETTINGS
101	ALARM(101) MGV CONTROL SETUP ERROR	CHECK FOR PROPER INSTALLATION OF GP BOARD AND SETTINGS
102*	ALARM(102) GP CONTROL SETUP ERROR	CHECK FOR PROPER INSTALLATION OF GP BOARD AND SETTINGS
103*	ALARM(103) ADVANCED CONTROL SETUP ERROR	CHECK PRODIGY SETTINGS
104	Reserved	
105	ALARM(105) ADVANCED ECON CONTROL SETUP ERROR	CHECK ECON SWITCHES, DIALS, AND PRODIGY SETTINGS
106*	ALARM(106) BUILDING PRESS SENSOR A34	CHECK SENSOR AND WIRING
107*	ALARM(107) DUCT SUPPLY PRESS SENSOR A30	CHECK SENSOR AND WIRING
108	ALARM(108) DUCT SUPPLY HIGH PRESS SENSOR A30	CHECK SENSOR AND WIRING
109*	ALARM(109) STRIKE 3 DUCT SUPPLY PRESS SENSOR A30	CHECK SENSOR AND WIRING
110	ALARM(110) WAITING ON NETWORK DATA	CHECK NETWORK OR COMFORT SENSOR AND WIRING
111	ALARM(111) CONTROLLER PROBLEM	INTERNAL CONTROLLER PROBLEM. RESET TO CLEAR.
112	ALARM(112) CONTROLLER PROBLEM	INTERNAL CONTROLLER PROBLEM. RESET TO CLEAR.
113	Reserved	
114*	ALARM(114) CONTROLLER PROBLEM	POWER NOISE PROBLEM. RESET TO CLEAR.
115	ALARM(115) UNIT OFFLINE FOR TEST	CHECK PRODIGY SERVICE TEST MODE
116&117	Reserved	
118	ALARM(118) NO DISPLAY	DISPLAY NOT DETECTED
119	STATUS(119) RESET CAUSED BY WATCHDOG TIMEOUT	CONTACT LENNOX
120*	ALARM(120) ADD-ON BOARD MCB PROBLEM	MCB CONFIGURATION SETUP PROBLEM. RESET TO CLEAR OR ADVANCED SETUP.
121*	ALARM(121) LINE FREQ DOES NOT MATCH UNIT CONFIG	
122*	ALARM(122) 24VAC PRIMARY VOLTAGE LOW	
123*	ALARM(123) 24VAC PRIMARY VOLTAGE HIGH	
124*	ALARM(124) 24VAC SECONDARY VOLTAGE LOW	
125*	ALARM(125) 24VAC SECONDARY VOLTAGE HIGH	
126*	ALARM(126) LINE PHASING DOES NOT MATCH UNIT CONFIG	
127	Reserved	
128*	ALARM(128) 24VAC POWER LOSS	
129*	ALARM(129) VFD SHUTDOWN	VFD FAULT DETECTED. CHECK BELT AND FOR BLOWER OVERLOAD. FIX SOURCE OF FAULT AND RESET M2.
130	ALARM(130) VFD BYPASS ENGAGED	VFD BYPASS MODE IS ENGAGED. BLOWER MAY OR MAY NOT BE ON. DISENGAGE AT MSAV MENU.
131	Reserved	
132	ALARM(132) VFD BYPASS NOT CONFIGURED	VFD BYPASS MODE HAS NOT BEEN SELECTED. UNIT OPERATES AS IF BYPASS IS NOT INSTALLED.
133	ALARM(133) CHECKING POWER	M2 UNABLE TO DETERMINE CORRECT PHASE/VOLTAGE.
134	ALARM(134) LOW SUPPLY CFM	SMARTAIRFLOW™ ENABLED RTU - INDICATES AIRFLOW TARGET CANNOT BE ACHIEVED. CHECK CAUSE OF AIRFLOW REDUCTION SUCH AS DIRTY FILTER, CHANGES IN DUCT WORK, ETC

Event Code	Table 8. Alarm Codes	
	Display Message	**Action**
135*	ALARM(135) NO AIRFLOW	BLOWER RPM IS TOO LOW AS INDICATES BY BLOWER STATUS. THIS MEANS THAT THE BLOWER IS NOT WORKING."
136*	ALARM(136) OUTSIDE AIR DAMPER/ECON MECHANICAL FAULT	OUTDOOR AIR DAMPER MAY BE IN A STUCK CONDITION.
137	ALARM(137) LOW OUTDOOR AIRFLOW	OUTDOOR AIR DAMPER MAY BE IN A STUCK CONDITION.
138	Reserved	
139	ALARM(139) OUTDOOR AIRFLOW TOO HIGH	VENTILATION CFM IS TOO HIGH SO THE RTU IS WASTING ENERGY.
140	ALARM(140) CFM TARGET TOO LOW - THIS SETUP MIN XXXX CFM	VERIFY THE MSAV.BLOWER SETTINGS AND SET THE CM TARGETS ABOVE XXXX CFM
141	ALARM(141) CFM TARGET TOO HIGH - THIS SETUP MAX XXXX CFM	VERIFY THE MSAV.BLOWER SETTINGS AND SET THE CM TARGETS BELOW XXXX CFM
142	Reserved	
143*	ALARM(143) DAMPER PRESSURE	DAMPER DIFFERENTIAL PRESSURE SENSOR VALUE IS NOT WITHIN THE VALID RANGE. MAY BE PROBLEM WITH THE SENOR TUBING, HIGH RETURN DUCT RESISTANCE ETC.
144	ALARM(144) FIRMWARE UPDATE	M2 CONTROL BOARD FIRMWARE UPDATE RECORDED
145*	ALARM(145) VCB NOT PRESENT	SMARTAIRFLOW™ IS INSTALLED BUT VCB BOARD IS NOT PRESENT/NOT RECOGNIZED BY M2.
146	Reserved	
147*	ALARM(147) OA DAMPER ERROR	WHEN THE DIFFERENCE BETWEEN THE TARGET POSITION AND THE ACTUAL POSITION OF DAMPER IS GREATER THAN 30%, OR THE DAMPER MOTOR FEEDBACK < 0.5V, OR TEMPERATURE MEASUREMENTS INDICATE POSSIBLE STUCK DAMPER BLADES.
148*	ALARM(148) SMARTAIRFLOW CONFIG ERROR	SMARTAIRFLOW™ OPTION IS INSTALLED BUT BLOWER TYPE IS NOT EP CAPABLE OR DAMPER IS NOT INSTALLED. ONLY BLOWER TYPES M (VGD) AND E (ECM) ARE EP CAPABLE.
149*	ALARM(149) VCB PRESSURE SENSOR ERROR	HIGH OR LOW OUT OF RANGE READING FOR THE VCB1 PRESSURE SENSOR.
150*	ALARM(150) NOT ECONOMIZING WHEN IT SHOULD	DAMPER IS NOT OPEN ADEQUATELY AND RTU IS WASTING ENERGY.
151*	ALARM(151) ECONOMIZING WHEN IT SHOULD NOT	DAMPER IS OPEN EXCESSIVELY AND RTU IS WASTING ENERGY.

Wiring Diagrams (036, 048, 060 Units)

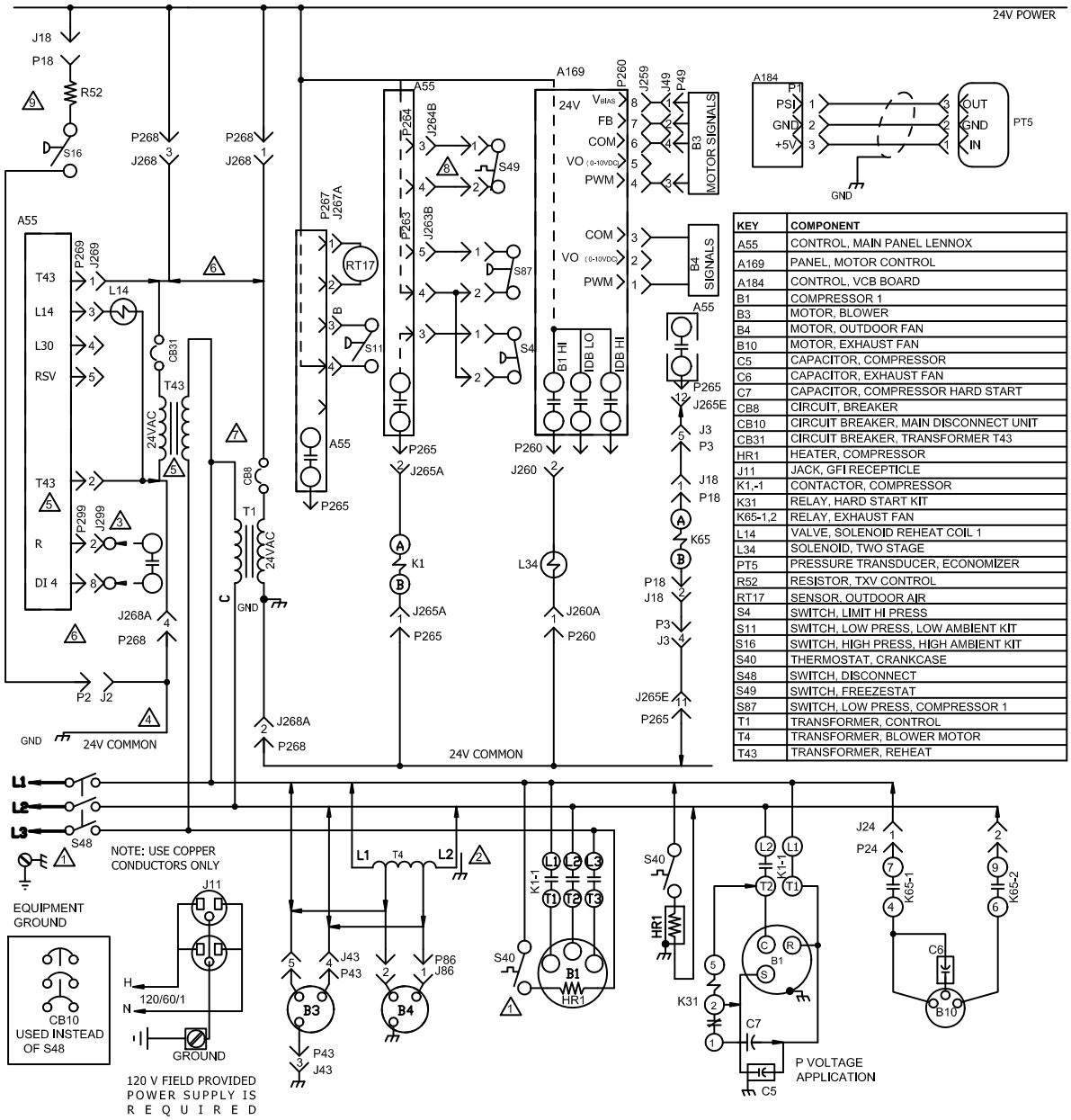

KEY	COMPONENT
A55	CONTROL, MAIN PANEL LENNOX
A169	PANEL, MOTOR CONTROL
A184	CONTROL, VCB BOARD
B1	COMPRESSOR 1
B3	MOTOR, BLOWER
B4	MOTOR, OUTDOOR FAN
B10	MOTOR, EXHAUST FAN
C5	CAPACITOR, COMPRESSOR
C6	CAPACITOR, EXHAUST FAN
C7	CAPACITOR, COMPRESSOR HARD START
CB8	CIRCUIT, BREAKER
CB10	CIRCUIT BREAKER, MAIN DISCONNECT UNIT
CB31	CIRCUIT BREAKER, TRANSFORMER T43
HR1	HEATER, COMPRESSOR
J11	JACK, GFI RECEPTICLE
K1,-1	CONTACTOR, COMPRESSOR
K31	RELAY, HARD START KIT
K65-1,2	RELAY, EXHAUST FAN
L14	VALVE, SOLENOID REHEAT COIL 1
L34	SOLENOID, TWO STAGE
PT5	PRESSURE TRANSDUCER, ECONOMIZER
R52	RESISTOR, TXV CONTROL
RT17	SENSOR, OUTDOOR AIR
S4	SWITCH, LIMIT HI PRESS
S11	SWITCH, LOW PRESS, LOW AMBIENT KIT
S16	SWITCH, HIGH PRESS, HIGH AMBIENT KIT
S40	THERMOSTAT, CRANKCASE
S48	SWITCH, DISCONNECT
S49	SWITCH, FREEZESTAT
S87	SWITCH, LOW PRESS, COMPRESSOR 1
T1	TRANSFORMER, CONTROL
T4	TRANSFORMER, BLOWER MOTOR
T43	TRANSFORMER, REHEAT

1. USED ON G, J AND Y VOLTAGE APPLICATIONS
2. T4 USED ONLY ON G AND VOLTAGE UNITS
3. EXTERNAL HUMIDITROL CONTACTS
4. CONNECT TO L2 ON SINGLE PHASE UNITS.
5. ONLY IN UNITS WITH HUMIDITROL OR PHASE DETECTION OPTION
6. J268-1, -3 AND J268-2,-4 ARE CONNECTED ON UNITS WITHOUT HUMIDITROL OR PHASE DETECTION OPTIONS
7. MOVE WIRE FROM 240 TO 208 TAP ON T1 OR T43 TRANSFORMERS FOR 208 LINE VOLTAGE APPLICTIONS
8. S49 IS PART OF A 5VDC CIRCUIT
9. USED ON ENVIRON COIL SYSTEM ONLY

J/P #	JACK/PLUG DESCRIPTION
2	HEAT
3	ECONOMIZER BYPASS
18	EXHAUST FAN
24	EXHAUST FAN
43	BLOWER MORTOR
49	MOTOR VARIABLE SPEED
259	ECM MOTORS
260	BLOWER,COMP TWO SPEED CONTROL
263	HIGH AND LOW PRESSURE SWITCHES
264	BLOWER DECK
265	CONTACTORS AND RELAYS
267	OUTDOOR FAN AREA
268	TRANSFORMER 1 POWER
269	HUMIDITROL
299	HUMIDITROL INTERFACE

DENOTES OPTIONAL COMPONENTS
LINE VOLTAGE FIELD INSTALLED

NOTE - IF ANY WIRE IN THIS APPLIANCE IS REPLACED IT MUST BE REPLACED WITH WIRE OF LIKE SIZE, RATING, TERMINATION AND INSULATION THICKNESS
WARNING - ELECTRIC SHOCK HAZARD, CAN CAUSE INJURY OR DEATH . UNIT MUST BE GROUNDED IN ACCORDANCE WITH NATIONAL AND LOCAL CODES

DISCONNECT ALL POWER BEFORE SERVICING.

04/13	WIRING DIAGRAM 537619-01	04/13
COOLING		
LCH/LGH - 036H,048H,060H - G,J,P,Y		
SECTION B		REV 0
Supersedes 537558-01	Form No. 537619-01	

Wiring Diagrams (ACCESSORIES)

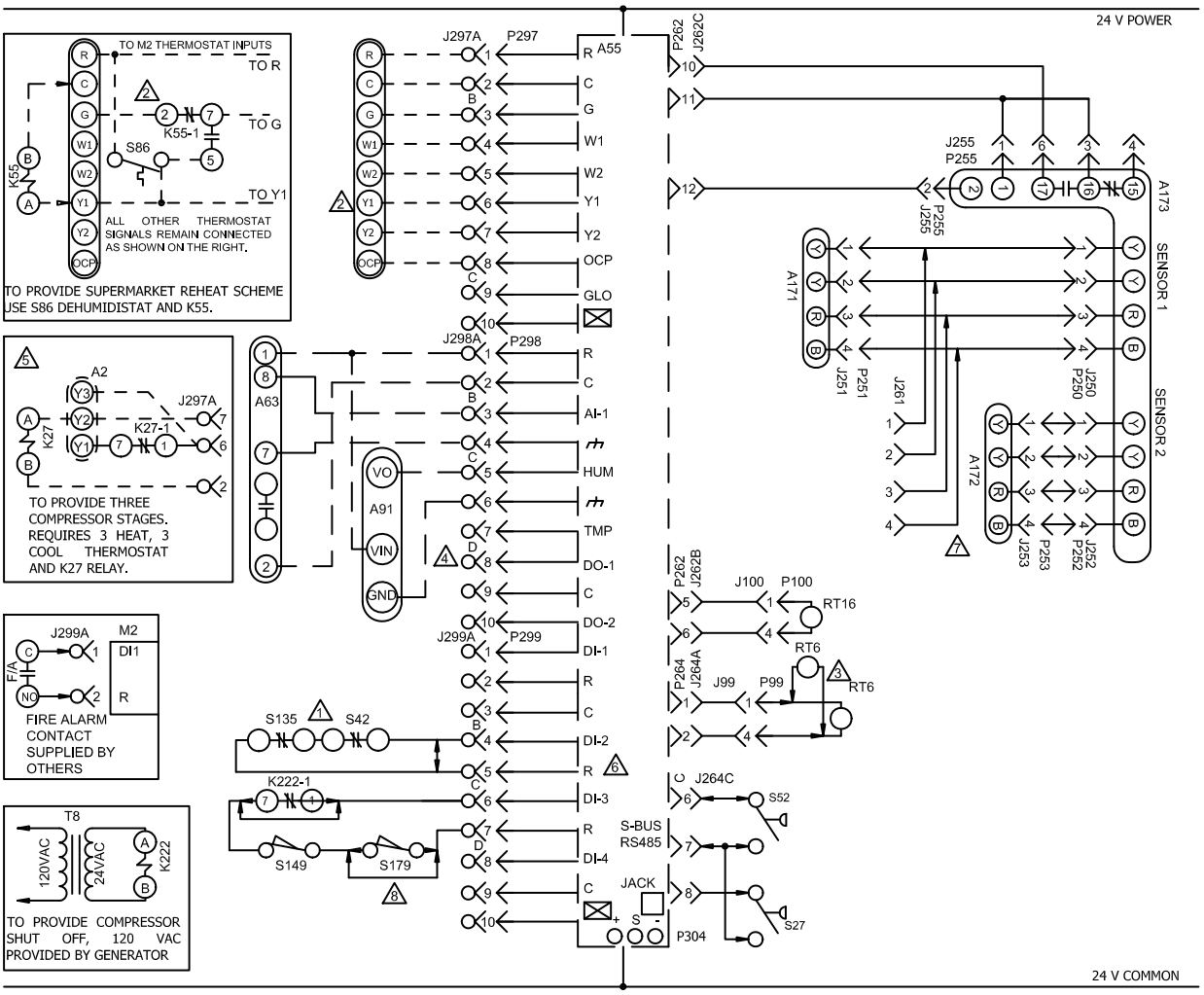

KEY	COMPONENT
A2	SENSOR, ELECTRONIC THERMOSTAT
A55	PANEL, MAIN
A63	SENSOR, CO2 (IAQ) OPTIONAL
A91	SENSOR, HUMIDITY
A171	SENSOR ONE, SMOKE, RETURN AIR
A172	SENSOR TWO, SMOKE, SUPPLY AIR
A173	MODULE, CONTROL SMOKE DETECTION
J99	JACK, RT16 RETURN AIR SENSOR
J100	JACK, RT6 SUPPLY AIR SENSOR
J250	JACK, SMOKE DETECTOR ONE
J251	JACK, SMOKE DETECTOR ONE
J252	JACK, SMOKE DETECTOR TWO
J253	JACK, SMOKE DETECTOR TWO
J255	JACK, MODULE, CONTROL SMOKE DETECTION
J261	JACK, SUPPLY SMOKE DETECTOR JUMPER
J262	JACK, ECONOMIZER
J264	JACK, BLOWER DECK
J297	JACK, THERMOSTAT - DDC INTERFACE
J298	JACK, IAQ INTERFACE
J299	JACK, SAFETY INTERFACE
K27, -1	RELAY, TRANSFER
K55,-1	RELAY, BLOWER
K222, -1	RELAY, COMPRESSOR LOCKOUT
P99	PLUG, RT16 RETURN AIR SENSOR
P100	PLUG, RT6 SUPPLY AIR SENSOR
P250	PLUG, SMOKE DETECTOR ONE
P251	PLUG, SMOKE DETECTOR ONE
P252	PLUG, SMOKE DETECTOR TWO
P253	PLUG, SMOKE DETECTOR TWO
P255	PLUG, MODULE, CONTROL SMOKE DETECTION
P262	PLUG, ECONOMIZER
P264	PLUG, BLOWER DECK
P297	PLUG, THERMOSTAT - DDC INTERFACE
P298	PLUG, IAQ INTERFACE
P299	PLUG, SAFETY INTERFACE
P304	PLUG, SYS BUS
RT6	SENSOR, SUPPLY AIR TEMP
RT16	SENSOR, RETURN AIR TEMP
S27	SWITCH, FILTER
S52	SWITCH, AIRFLOW
S42	SWITCH, OVERLOAD RELAY BLOWER MOTOR LO
S86	SWITCH, DEHUMIDISTAT
S135	SWITCH, OVERLOAD RELAY BLOWER MOTOR HI
S149	SWITCH, OVERFLOW ONE
S179	SWITCH, OVERFLOW TWO
T8	TRANSFORMER, 120 V GENERATOR POWERED

1. FOR MOTORS WITH S42 AND S135 EXTERNAL OVERLOAD LESS INVERTER, SEE INVERTER WITH BY PASS FOR S42 HOOK UP
2. USE S86 DEHUMIDISTAT AND K55 FOR OPTIONAL SUPERMARKET REHEAT SCHEME, M2 PARAMETERS NEED TO BE MODIFIED UNDER THE SETTINGS MENU OR VIA UC SOFTWARE FOR SIMULTANEOUS HEATING AND COOLING.
3. REMOTE LOCATION OF RT6
4. P298-8 (DO-1) IS SERVICE RELAY OUTPUT (24VAC) IF USED CONNECT TO AN INDICATOR LIGHT
5. THERMOSTAT HOOKUP FOR PROGRAMMABLE CONFIGURATION OF THE M2 BOARD (A55).
6. M2 SETTINGS MUST BE MODIFIED WHEN K222, S42, S52, S135, S149 OR S179 ARE INSTALLED
7. CONNECT A172 SENSOR TO J261 ON SUPPLY AIR SMOKE DETECTOR ONLY
8. S179, OVERFLOW SWITCH USED ON LGH/LCH 420-600 UNITS ONLY

DESIGNATES OPTIONAL WIRING
CLASS II FIELD WIRING

WIRING DIAGRAM	06/11
ACCESSORIES	
ELECTRONIC OR ELECTROMECHANICAL THERMOSTAT FOR ENERGENCE™	
SECTION C	REV 0
Supersedes	New Form No. 537108-02

© 2011 Lennox Commercial

Wiring Diagrams (ACCESSORIES)

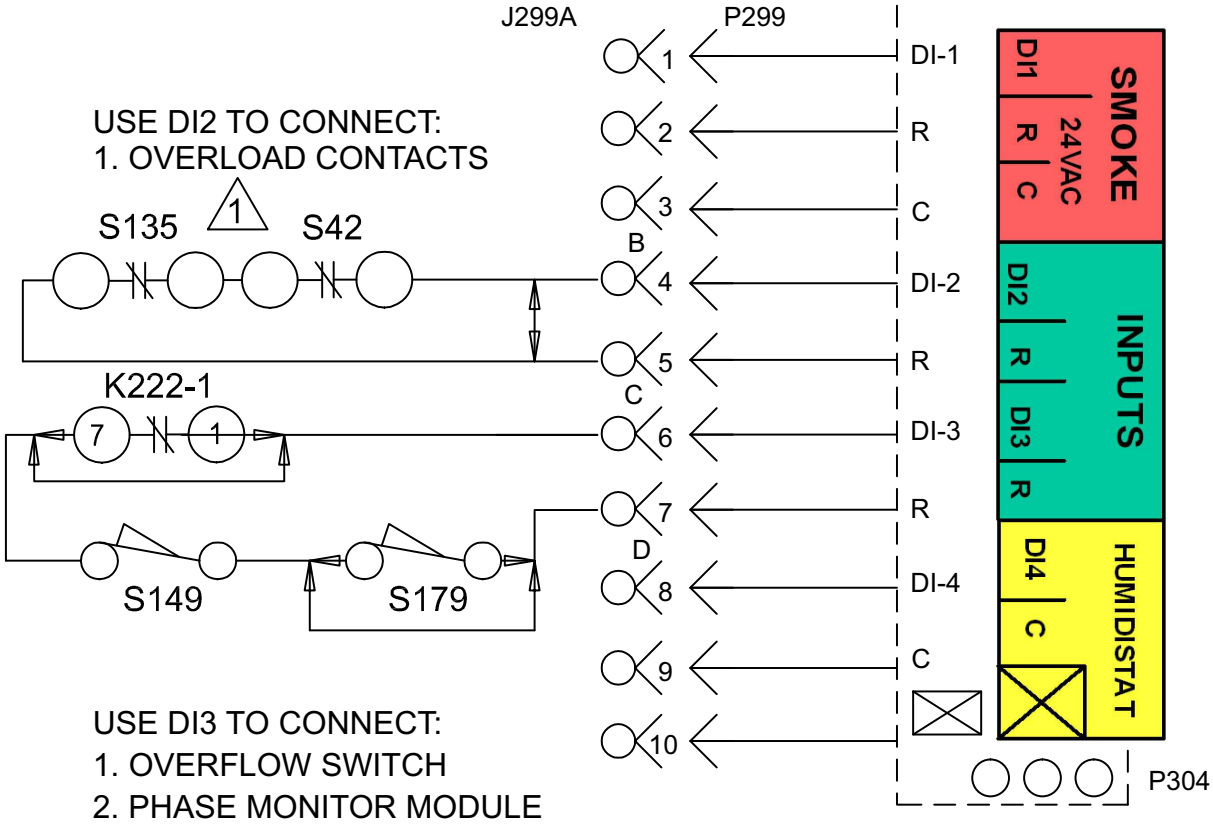

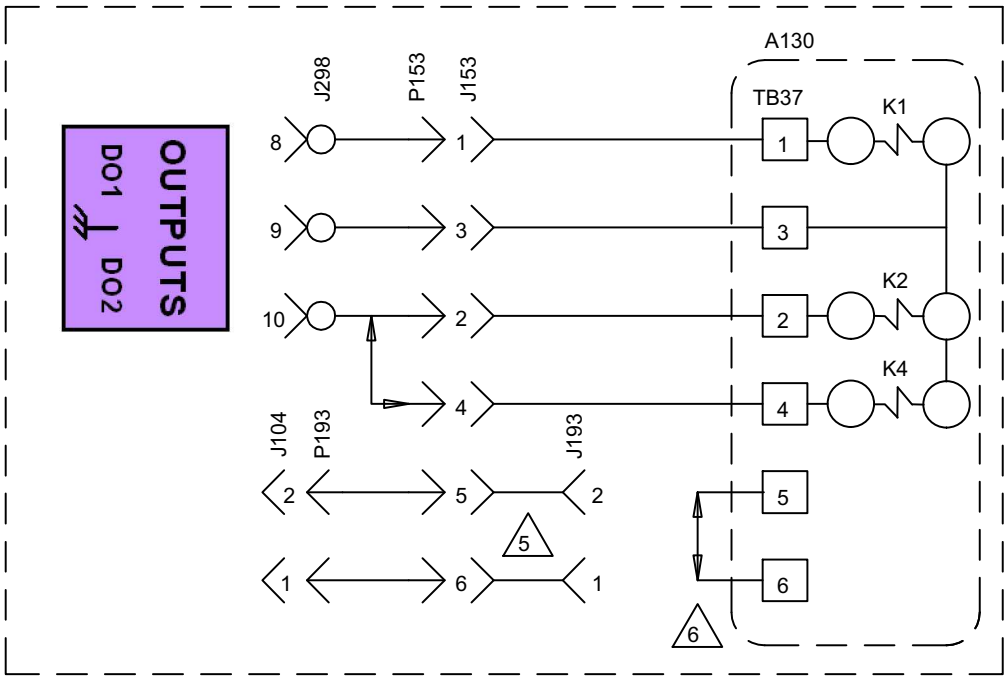

ENERGY RECOVERY WHEEL HOOK UP

Wiring Diagrams (240, 300 Units)

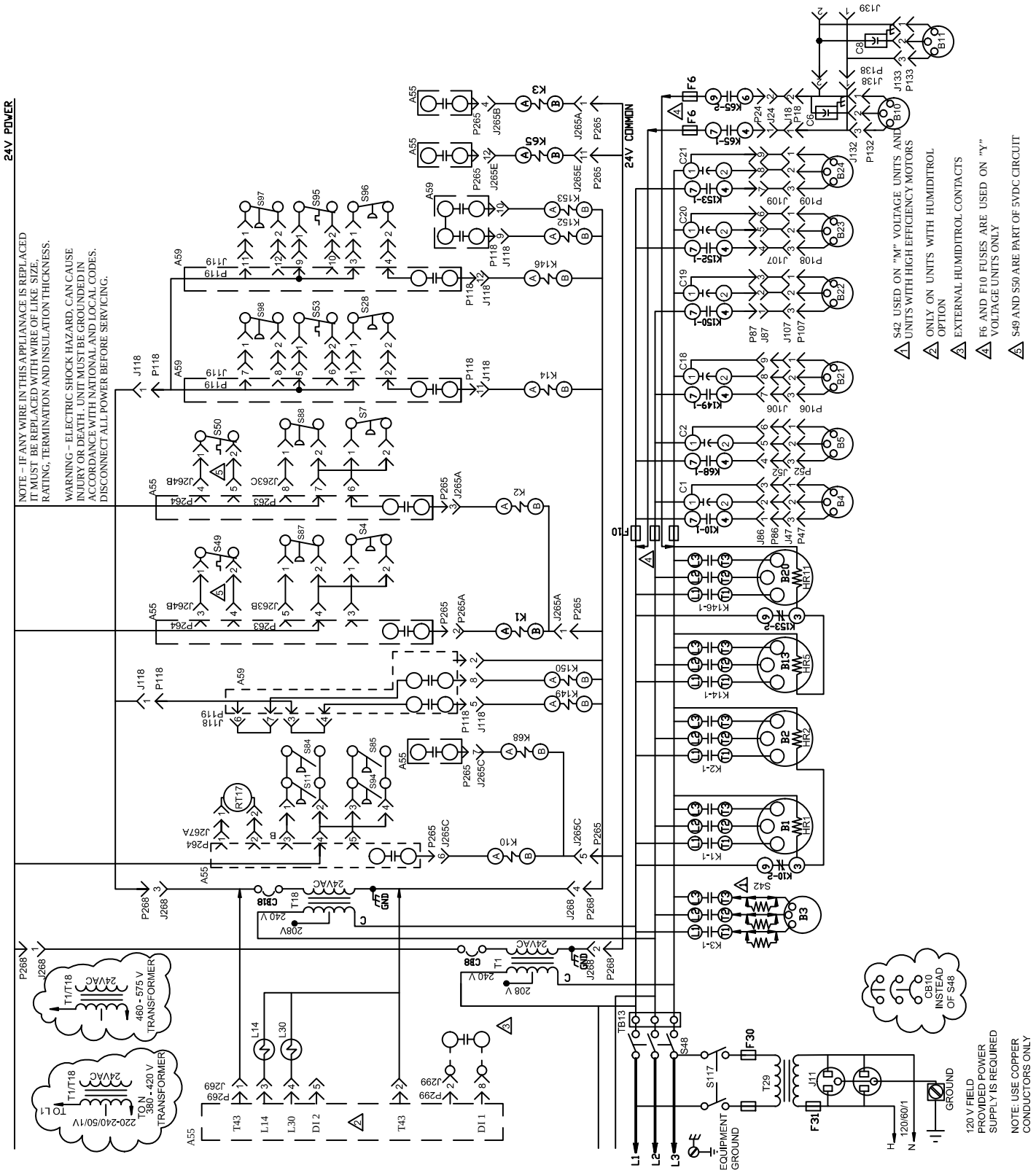

KEY	COMPONENT
A55	PANEL, MAIN
A59	PANEL, COMPRESSORS 3 AND 4
A169	PANEL, MOTOR CONTROL
A184	CONTROL, VCB BOARD
B1	COMPRESSOR 1
B2	COMPRESSOR 2
B3	MOTOR, BLOWER
B4	MOTOR, OUTDOOR FAN 1
B5	MOTOR, OUTDOOR FAN 2
B10	MOTOR, EXHAUST FAN 1
B11	MOTOR, EXHAUST FAN 2
B13	COMPRESSOR 3
B20	COMPRESSOR 4
B21	MOTOR, OUTDOOR FAN 3
B22	MOTOR, OUTDOOR FAN 4
B23	MOTOR, OUTDOOR FAN 5
B24	MOTOR, OUTDOOR FAN 6
C1	CAPACITOR, OUTDOOR FAN 1
C2	CAPACITOR, OUTDOOR FAN 2
C6	CAPACITOR, EXHAUST FAN 1
C8	CAPACITOR, EXHAUST FAN 2
C18	CAPACITOR, OUTDOOR FAN 3
C19	CAPACITOR, OUTDOOR FAN 4
C20	CAPACITOR, OUTDOOR FAN 5
C21	CAPACITOR, OUTDOOR FAN 6
CB8	CIRCUIT, BREAKER T1
CB10	CIRCUIT BREAKER, MAIN DISCONNECT UNIT
CB18	CIRCUIT, BREAKER T18
F6	FUSE, EXHAUST FAN
F10	FUSE, OUTDOOR FAN MOTOR
F30	FUSE, TRANSFORMER T29 PRIMARY
F31	FUSE, TRANSFORMER T29 SECONDARY
HR1	HEATER COMPRESSOR 1
HR2	HEATER COMPRESSOR 2
HR5	HEATER COMPRESSOR 3
HR11	HEATER COMPRESSOR 4
J11	JACK, GFI, RECEPTACLE
J18	JACK, EXHAUST FAN COMP
J24	JACK, EXHAUST FAN
J47	JACK, OUTDOOR FAN 1
J52	JACK, OUTDOOR FAN 2
J86	JACK, OUTDOOR FAN INTERFACE
J87	JACK, OUTDOOR FAN INTERFACE 2
J106	JACK, OUTDOOR FAN 3
J107	JACK, OUTDOOR FAN 4
J108	JACK, OUTDOOR FAN 5
J109	JACK, OUTDOOR FAN 6
J118	JACK, COMPRESSOR 3 AND 4, CONTROL
J119	JACK, COMPRESSOR 3 AND 4, INPUT
J132	JACK, BLOWER , EXHAUST FAN MOTOR 1
J133	JACK, BLOWER , EXHAUST FAN MOTOR 2
J138	JACK, EXHAUST FAN 2
J139	JACK, EXHAUST FAN 3
J263	JACK, HIGH AND LOW PRESSURE SWITCHES
J264	JACK, BLOWER DECK
J265	JACK, CONTACTORS AND RELAYS
K2,-1	CONTACTOR, COMPRESSOR 2
K3, -1	CONTACTOR, BLOWER
K10,-1,2	RELAY, OUTDOOR FAN 1
K14,-1	CONTACTOR, COMPRESSOR 3
K65-1,2	RELAY, EXHAUST FAN
K68,-1	RELAY, OUTDOOR FAN 2
K146,1	CONTACTOR, COMPRESSOR 4
K149,-1	RELAY, OUTDOOR FAN 3
K150,-1	RELAY, OUTDOOR FAN 4

K152,-1	RELAY, OUTDOOR FAN 5
K153,-1,2	RELAY, OUTDOOR FAN 6
L14	VALVE, SOLENOID REHEAT COIL 1
L30	VALVE, SOLENOID REHEAT COIL 2
P18	PLUG, EXHAUST FAN COMP
P24	PLUG, EXHAUST FAN
P47	PLUG, OUTDOOR FAN 1
P52	PLUG, OUTDOOR FAN 2
P86	PLUG, OUTDOOR FAN INTERFACE
P87	PLUG, OUTDOOR FAN INTERFACE 2
P106	PLUG, OUTDOOR FAN 3
P107	PLUG, OUTDOOR FAN 4
P108	PLUG, OUTDOOR FAN 5
P109	PLUG, OUTDOOR FAN 6
P118	PLUG, COMPRESSOR 3 AND 4, CONTROL
P119	PLUG, COMPRESSOR 3 AND 4, INPUT
P132	PLUG, EXHAUST FAN MOTOR 1
P133	PLUG, EXHAUST FAN MOTOR 2
P138	PLUG, EXHAUST FAN 2
P263	PLUG, HIGH AND LOW PRESSURE SWITCHES
P264	PLUG, BLOWER DECK
P265	PLUG, CONTACTORS AND RELAYS
P267	PLUG,OUTDOOR FAN AREA
P268	PLUG, TRANSFORMERS
P269	PLUG, HUMIDITROL
P299	PLUG, SAFETY
PT5	PRESSURE TRANSDUCER, ECONOMIZER
RT17	SENSOR, OUTDOOR AIR
S4	SWITCH, LIMIT HI PRESS COMPRESS 1
S7	SWITCH, LIMIT HI PRESS COMPRESS 2
S11	SWITCH, LOW PRESS, LOW AMBIENT KIT COMP 1
S28	SWITCH, LIMIT HI PRESS COMPRESS 3
S42	SWITCH, OVERLOAD RELAY BLOWER MOTOR
S48	SWITCH, DISCONNECT
S49	SWITCH, FREEZE STAT COMPRESS 1
S50	SWITCH, FREEZE STAT COMPRESS 2
S53	SWITCH, FREEZE STAT COMPRESS 3
S84	SWITCH, LOW PRESS, LOW AMBIENT KIT COMP 2
S85	SWITCH, LOW PRESS, LOW AMBIENT KIT COMP 3
S87	SWITCH, LOW PRESS, COMP 1
S88	SWITCH, LOW PRESS, COMP 2
S94	SWITCH, LOW PRESS, LOW AMBIENT KIT COMP 4
S95	SWITCH, FREEZE STAT COMPRESS 4
S96	SWITCH, LIMIT HI PRESS COMPRESS 4
S97	SWITCH, LOW PRESS, COMP 4
S98	SWITCH, LOW PRESS, COMP 3

Table 9. M2 unit controller signal reference diagram

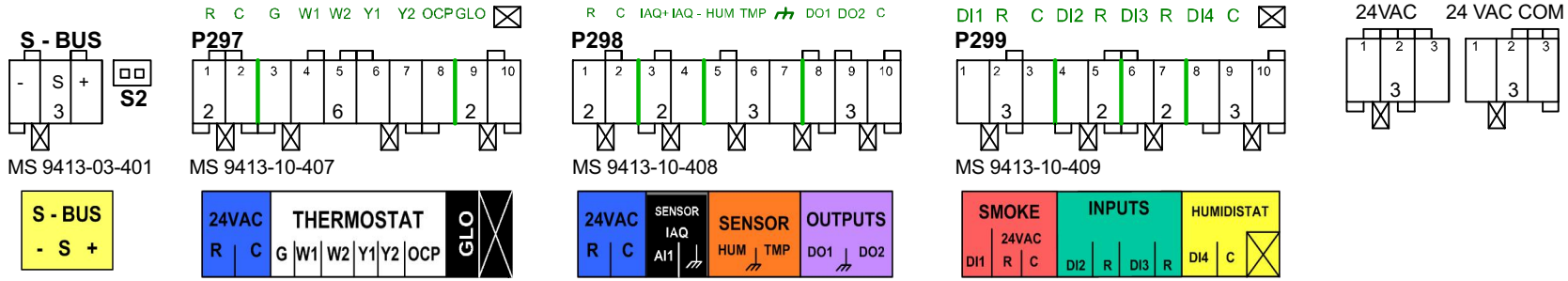

Pin #	Label	Description	Type
P297 Thermostat			
1	R	TRANSFORMER 1 24VAC POWER	24VAC
2	C	TRANSFORMER 1 24V COMMON	24V COMM
3	G	BLOWER SIGNAL	24VAC DI
4	W1	1ST STAGE HEATING	24VAC DI
5	W2	2ND STAGE HEATING	24VAC DI
6	Y1	1ST STAGE COOLING	24VAC DI
7	Y2	2ND STAGE COOLING	24VAC DI
8	OCP	OCCUPIED SIGNAL	24VAC DI
9	GLO	GLOBAL CONTROL INPUT	24VAC DI
10	RSV	RESERVED	NA
P298 IAQ Interface			
1	R	TRANSFORMER 1 24VAC POWER	24VAC
2	C	TRANSFORMER 1 24V COMMON	24V COMM
3	IAQ+	INDOOR AIR QUALITY	0-10VDC AI
4	GND	INDOOR AIR QUALITY	0-10VDC AI
5	HUM	RH SENSOR	0-10VDC AI
6	GND	DIGITAL GROUND	GND
7	TMP	ZONE SENSOR	0-10VDC AI
8	DO1	SERVICE RELAY OUTPUT	24VAC DO
9	GND	24 VAC COMMON	24V COMM
10	DO2	EXHAUST FAN	24VAC DO
P299 Safety			
1	DI1	SMOKE DETECTOR (NO)	24VAC DI
2	R	TRANSFORMER 1 24VAC POWER	24VAC
3	C	TRANSFORMER 1 24V COMMON	24V COMM
4	DI2	DIGITAL INPUT 2 FORMER (S42 & S135)	24VAC DI
5	R	TRANSFORMER 1 24VAC POWER	24VAC
6	DI3	DIGITAL INPUT 3 FORMER (S149 & A42 FOR A BOX)	24VAC DI
7	R	TRANSFORMER 1 24VAC POWER	24VAC
8	DI4	DIGITAL INPUT 4 FORMER (HUMIDITROL INPUT)	24VAC DI
9	C	TRANSFORMER 1 24V COMMON	24V COMM
10	RSV	RESERVED	NA

Description	Part Number
Assembly	**MS 9413-10-407**
Header & Label	MS 9413-10-011
- Header	MSLO 9408-010-576-960-000-00
- Label	MZ 9400-10-007
Screw terminal	MF 9306-002-0A-002-G
Screw terminal	MF 9306-006-43-000-G
Screw terminal	MF 9306-002-49-000-G
Assembly	**MS 9413-10-408**
Header & Label	MS 9413-10-012
- Header	MSLO 9408-S10-000
- Label	MZ 9400-10-008
Screw terminal	MF 9306-002-60-000-G
Screw terminal	MF 9306-002-64-000-G
Screw terminal	MF 9306-003-4D-000-G
Screw terminal	MF 9306-003-4L-000-G
Assembly	**MS 9413-10-409**
Header & Label	MS 9413-10-013
- Header	MSLO 9408-010-075-960-000-00
- Label	MZ 9400-10-009
Screw terminal	MF 9306-003-0H-000-G
Screw terminal	MF 9306-002-0P-002-G
Screw terminal	MF 9306-002-37-001-G
Screw terminal	MF 9306-003-01-000-G

Table 10. M2 board connections diagram

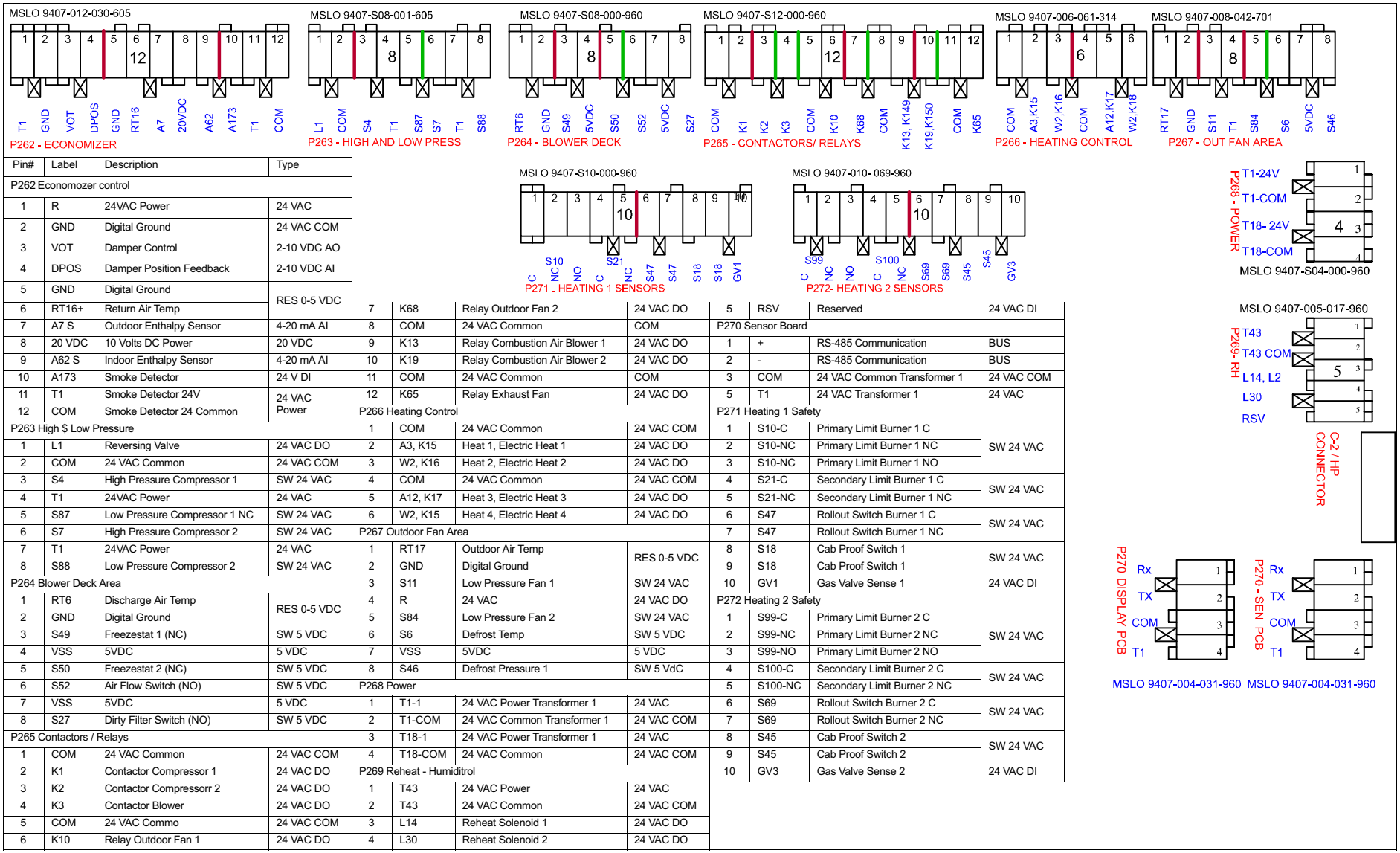

Pin#	Label	Description	Type
P262 Economozer control			
1	R	24VAC Power	24 VAC
2	GND	Digital Ground	24 VAC COM
3	VOT	Damper Control	2-10 VDC AO
4	DPOS	Damper Position Feedback	2-10 VDC AI
5	GND	Digital Ground	RES 0-5 VDC
6	RT16+	Return Air Temp	
7	A7 S	Outdoor Enthalpy Sensor	4-20 mA AI
8	20 VDC	10 Volts DC Power	20 VDC
9	A62 S	Indoor Enthalpy Sensor	4-20 mA AI
10	A173	Smoke Detector	24 V DI
11	T1	Smoke Detector 24V	24 VAC Power
12	COM	Smoke Detector 24 Common	
P263 High $ Low Pressure			
1	L1	Reversing Valve	24 VAC DO
2	COM	24 VAC Common	24 VAC COM
3	S4	High Pressure Compressor 1	SW 24 VAC
4	T1	24VAC Power	24 VAC
5	S87	Low Pressure Compressor 1 NC	SW 24 VAC
6	S7	High Pressure Compressor 2	SW 24 VAC
7	T1	24VAC Power	24 VAC
8	S88	Low Pressure Compressor 2	SW 24 VAC
P264 Blower Deck Area			
1	RT6	Discharge Air Temp	RES 0-5 VDC
2	GND	Digital Ground	
3	S49	Freezestat 1 (NC)	SW 5 VDC
4	VSS	5VDC	5 VDC
5	S50	Freezestat 2 (NC)	SW 5 VDC
6	S52	Air Flow Switch (NO)	SW 5 VDC
7	VSS	5VDC	5 VDC
8	S27	Dirty Filter Switch (NO)	SW 5 VDC
P265 Contactors / Relays			
1	COM	24 VAC Common	24 VAC COM
2	K1	Contactor Compressor 1	24 VAC DO
3	K2	Contactor Compressorr 2	24 VAC DO
4	K3	Contactor Blower	24 VAC DO
5	COM	24 VAC Commo	24 VAC COM
6	K10	Relay Outdoor Fan 1	24 VAC DO

7	K68	Relay Outdoor Fan 2	24 VAC DO
8	COM	24 VAC Common	COM
9	K13	Relay Combustion Air Blower 1	24 VAC DO
10	K19	Relay Combustion Air Blower 2	24 VAC DO
11	COM	24 VAC Common	COM
12	K65	Relay Exhaust Fan	24 VAC DO
P266 Heating Control			
1	COM	24 VAC Common	24 VAC COM
2	A3, K15	Heat 1, Electric Heat 1	24 VAC DO
3	W2, K16	Heat 2, Electric Heat 2	24 VAC DO
4	COM	24 VAC Common	24 VAC COM
5	A12, K17	Heat 3, Electric Heat 3	24 VAC DO
6	W2, K15	Heat 4, Electric Heat 4	24 VAC DO
P267 Outdoor Fan Area			
1	RT17	Outdoor Air Temp	RES 0-5 VDC
2	GND	Digital Ground	
3	S11	Low Pressure Fan 1	SW 24 VAC
4	R	24 VAC	24 VAC DO
5	S84	Low Pressure Fan 2	SW 24 VAC
6	S6	Defrost Temp	SW 5 VDC
7	VSS	5VDC	5 VDC
8	S46	Defrost Pressure 1	SW 5 VdC
P268 Power			
1	T1-1	24 VAC Power Transformer 1	24 VAC
2	T1-COM	24 VAC Common Transformer 1	24 VAC COM
3	T18-1	24 VAC Power Transformer 1	24 VAC
4	T18-COM	24 VAC Common	24 VAC COM
P269 Reheat - Humiditrol			
1	T43	24 VAC Power	24 VAC
2	T43	24 VAC Common	24 VAC COM
3	L14	Reheat Solenoid 1	24 VAC DO
4	L30	Reheat Solenoid 2	24 VAC DO

5	RSV	Reserved	24 VAC DI
P270 Sensor Board			
1	+	RS-485 Communication	BUS
2	-	RS-485 Communication	BUS
3	COM	24 VAC Common Transformer 1	24 VAC COM
5	T1	24 VAC Transformer 1	24 VAC
P271 Heating 1 Safety			
1	S10-C	Primary Limit Burner 1 C	SW 24 VAC
2	S10-NC	Primary Limit Burner 1 NC	
3	S10-NC	Primary Limit Burner 1 NO	
4	S21-C	Secondary Limit Burner 1 C	SW 24 VAC
5	S21-NC	Secondary Limit Burner 1 NC	
6	S47	Rollout Switch Burner 1 C	SW 24 VAC
7	S47	Rollout Switch Burner 1 NC	
8	S18	Cab Proof Switch 1	SW 24 VAC
9	S18	Cab Proof Switch 1	
10	GV1	Gas Valve Sense 1	24 VAC DI
P272 Heating 2 Safety			
1	S99-C	Primary Limit Burner 2 C	SW 24 VAC
2	S99-NC	Primary Limit Burner 2 NC	
3	S99-NO	Primary Limit Burner 2 NO	
4	S100-C	Secondary Limit Burner 2 C	SW 24 VAC
5	S100-NC	Secondary Limit Burner 2 NC	
6	S69	Rollout Switch Burner 2 C	SW 24 VAC
7	S69	Rollout Switch Burner 2 NC	
8	S45	Cab Proof Switch 2	SW 24 VAC
9	S45	Cab Proof Switch 2	
10	GV3	Gas Valve Sense 2	24 VAC DI

Quick Start Guide

⚠ CAUTION

Check rooftop unit electrical power for proper voltage and phasing. Check gas train components.

1. Turn on unit, correct alarm issues as necessary.
2. Follow GUIDED SETUP menu to properly configure unit (see Page 9).
3. Be sure unit is in normal operating mode as seen in display (COOLING, HEATING, IDLE, etc).
4. Conduct unit startup to verify operation under SERVICE-> TEST menu (see Page 12).
5. Insert USB memory stick into display cover to verify service and collect unit information.

Control Mode	Menu Setup Needed	Tips
THERMOSTAT	(Factory set for 2 stage thermostat)	• Check 2 AMP fuse if wiring error. • Check LEDs for signals. • Check ground switch position.
LOCAL MODE	Change default backup setpoints; see SETTINGS -> CONTROL -> LOCAL (Page 17).	• Give unit time to startup, error codes 74 and 93 are expected. • Humidity control requires sensor or error code 76
MSAV	Change motor torque; see SETTINGS -> CONTROL -> MSAV (Page 19).	• Use LENNOX MSAV trained technician. • Final motor CFM needs to be set by Test and Balance technician • Blower charts are located in unit EHB.
BACnet	Select control mode; see SETTINGS -> CONTROL -> BACNET (Page 18).	• Setup information to be verified with integrator. • Follow wiring instructions including network termination • Remember to set MAC address 0-127 • Expert level BACnet service manual available.
LonTalk	Select control mode; see SETTINGS-> CONTROL -> LONTALK (Page 18).	• Setup information to be verified with integrator. • Follow wiring instructions including network termination • XIF file available. Neuron ID on sticker. • Expert level LonTalk service manual available.
L Connection	Select control mode; see SETTINGS -> CONTROL -> LCONN (Page 17).	• Follow wiring instructions including network termination • Comfort Sensors are 24 VAC polarity sensitive. • All network devices need to be correctly addressed
Damper	Select control mode; see SETTINGS -> SETPOINTS -> DAMPER (Page 16).	• Verify damper minimum positions • Refer to Economizer section of manual for more detail
Reheat	Select sensor type; see SETTINGS -> CONTROL -> REHEAT (Page 18).	• Two possible connections, SENSOR and HUMIDISTAT • Analog sensor wiring is polarity sensitive

For Lennox Service Support 1-800-4LENNOX. For Lennox Commercial website, go to www.lennoxcommercial.com.

Revision History	
12/2009	Initial production release.
6/2011	Revised software support; (3/11); add LONTALK in table on page 4; remove SmartWire Repair Tool Kit
11/2011	New firmware upload procedures; MSAV additions.
3/2013	Change diagram 537108-01 to 537108-02; revise trademarks throughout manual; added error code 147; DB1 menu changes; changes to economizer operation for new hardware.
6/2013	Add information concerning SmartAirflow™.
7/2013	Updated information concerning UNIT F/C options on page 6 and 15.