LENNOX

ENGINEERING DATA

CONDENSING UNITS

10ACC

MERIT® SERIES
EXPANSION VALVE AND RFC™ SYSTEMS

1.5 to 5 Tons
SEER up to 11.55
Cooling Capacity - 17,400 to 59,500 Btuh

Bulletin No. 210347
July 2003
Supersedes
September 2002

CERTIFICATION APPLIES ONLY WHEN THE COMPLETE SYSTEM IS LISTED WITH ARI

REGISTERED QUALITY SYSTEMS

VERIFIED
Energy Performance Rendement Énergétique
VÉRIFIÉ

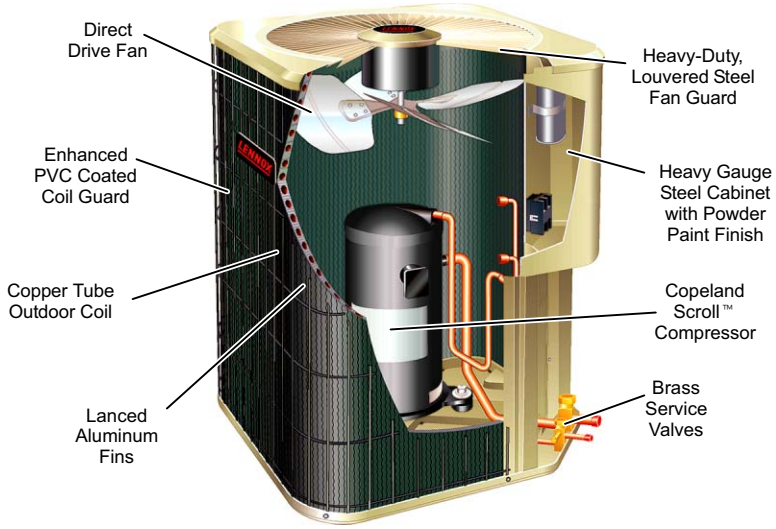

MODEL NUMBER IDENTIFICATION

10 AC C - 024 - 230

SEER

Unit Type
AC - Air Conditioner

Series

Nominal Cooling Capacity
018 - 1.5 tons (5.3 kW)
024 - 2 tons (7.0 kW)
030 - 2.5 tons (8.8 kW)
036 - 3 tons (10.6 kW)
042 - 3.5 tons (12.3 kW)
048 - 4 tons (14.1 kW)
060 - 5 tons (17.6 kW)

Voltage
230 - 208/230v-60hz-1ph

Options (excluded if no options)
C - Canadian (if different from US)
G - Government Options
T - Technicoat

FEATURES

CONTENTS

ARI Rating Tables . . . . . Pages 6-11
Dimensions . . . . . Page 5
Expanded Rating Tables . . . . . Pages 12-41
Field Wiring . . . . . Page 3
Features . . . . . Pages 1-2
Installation Clearances . . . . . Page 5
Model Number Identification . . . . . Page 1
Optional Accessories . . . . . Page 3
Specifications . . . . . Page 4

APPLICATION

SEER up to 11.55.
1.5 through 5 ton (5.3 through 17.6 kW) matches with TXV or RFC.
Single phase power supply.
Vertical air discharge allows concealment behind shrubs at grade level or out of sight on a roof.
Matching blower powered or add-on furnace evaporator units provide a wide range of cooling capacities and applications. See ARI Ratings table.
For evaporator unit data, see Coils or Blower Coil Units tab section.
Units shipped completely factory assembled, piped and wired.
Each unit is test operated at the factory insuring proper operation.
Installer must set condensing unit, connect refrigerant lines and make electrical connections to complete job.

Visit us at www.lennox.com.
For the latest technical information, www.lennoxdavenet.com.

NOTE - Due to Lennox' ongoing committment to quality, Specifications, Ratings and Dimensions subject to change without notice and without incurring liability.
Improper installation, adjustment, alteration, service or maintenance can cause property damage or personal injury.
Installation and service must be performed by a qualified installer and servicing agency.

©2003 Lennox Industries Inc.

FEATURES

APPROVALS

Certified in accordance with USE certification program which is based on ARI Standard 210/240-94.
Sound rated in Lennox reverberant sound test room in accordance with test conditions included in ARI Standard 270-95.
Tested in the Lennox Research Laboratory environmental test room.
Rated according to U.S. Department of Energy (DOE) test procedures.
Condensing units and components within bonded for grounding to meet safety standards for servicing required by UL, NEC, and CEC.
Units are UL and ULC listed.
Energy rating verified by CSA.
ISO 9001 Registered Manufacturing Quality System.

EQUIPMENT WARRANTY

Compressor - limited warranty for five years in residential installations and one year in non-residential installations.
All other covered components - one year.
Refer to Lennox Equipment Limited Warranty certificate included with unit for specific details.

REFRIGERANT SYSTEM

RFCIV METERING SYSTEM

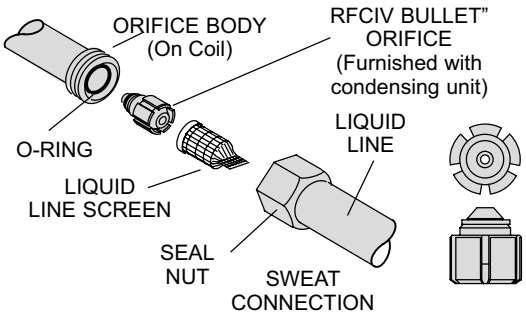

Refrigerant Flow Control Choice

Units are applicable to expansion valve systems or RFC refrigerant flow control systems.
10ACC units are applicable to Lennox RFCIV systems when matched with specific evaporator coils.
RFCIV accurately meters refrigerant in system.
Refrigerant control is accomplished by exact sizing of refrigerant metering orifice.
Principle of Lennox RFCIV system involves matching evaporator coil with proper bore size of orifice in metering device.
RFCIV system equalizes pressure shortly after compressor stops, unit starts unloaded, eliminating need for additional controls.

Copper Tube/Enhanced Fin Coil

Lennox designed and fabricated coil.
Ripple-edged aluminum fins.
Copper tube construction.
Lanced fins provide maximum exposure of fin surface to air stream resulting in excellent heat transfer.
Fin collars grip tubing for maximum contact area.
Flared shoulder tubing connections/silver soldering construction.
Coil is factory tested under high pressure to ensure leakproof construction.
Entire coil is accessible for cleaning.
PVC coated steel wire coil guard furnished as standard.

Condenser Fan

Direct drive fan moves large air volumes uniformly through entire condenser coil for high refrigerant cooling capacity.
Vertical air discharge minimizes operating sounds and eliminates damage to lawn and shrubs.
Fan motor has sleeve bearings and is inherently protected.
Motor totally enclosed for maximum protection from weather, dust and corrosion.
Rain shield on motor provides additional protection from moisture.
Louvered steel top fan guard furnished as standard.
Fan service access accomplished by removal of top panel.

COMPRESSORS

Copeland Scroll™ Compressor (10ACC-024-030-042-048-060)

Compressor features high efficiency with uniform suction flow, constant discharge flow and high volumetric efficiency and quiet operation.
Compressor consists of two involute spiral scrolls matched together to generate a series of crescent shaped gas pockets between them.
During compression, one scroll remains stationary while the other scroll orbits around it.
Gas is drawn into the outer pocket, the pocket is sealed as the scroll rotates.
As the spiral movement continues, gas pockets are pushed to the center of the scrolls. Volume between the pockets is simultaneously reduced.
When pocket reaches the center, gas is now at high pressure and is forced out of a port located in the center of the fixed scroll.
During compression, several pockets are compressed simultaneously resulting in a smooth continuous compression cycle.
Continuous flank contact, maintained by centrifugal force, minimizes gas leakage and maximizes efficiency.
Scroll compressor is tolerant to the effects of slugging and contaminants. If this occurs, scrolls separate, allowing liquid or contaminants to to be worked toward the center and discharged.
Low gas pulses during compression reduces operational sound levels.
Compressor motor is internally protected from excessive current and temperature.
Compressor is installed in the unit on resilient rubber mounts for vibration free operation.

Reciprocating Compressor (10ACC-018-036)

Designed for dependable efficiency with minimum operating cost.
Suction cooled and overload protected with internal pressure relief.
Hermetically sealed with built-in protection from excessive current and temperatures.
Running gear assembly resiliently suspended internally inside case.
Compressor installed in unit on resilient rubber mounts assuring low sound and vibration free operation.

CABINET

Heavy-gauge, galvanized steel cabinet with five station metal wash process.
Baked-on outdoor enamel paint finish provides superior rust and corrosion protection.
Painted base section.
Control box is conveniently located with all controls factory wired.
Corner patch plate allows access to compressor.
Drainage holes are provided in base section for moisture removal.
Non-corrosive PVC (polyvinyl chloride) coated steel wire condenser coil guard is furnished.

Refrigerant Line Connections, Electrical Inlets, Service Valves

Sweat connection suction and liquid lines are located on corner of unit cabinet.
Fully serviceable brass service valves prevent corrosion and provide access to refrigerant system. Suction valve can be fully shut off, while liquid valve may be front seated to manage refrigerant charge while servicing system.
10ACC-018 models are stubbed with 3/8 in. (9.5 mm) liquid line connection. Reducer coupling is furnished for liquid line connection using required 5/16 in. (7.9 mm) outside diameter line set.
Refrigerant line connections and field wiring inlets are located in one central area of cabinet for easy access.

OPTIONAL ACCESSORIES - MUST BE ORDERED EXTRA

CONTROLS

Freezestat
Installs on or near the discharge line of the evaporator or on the suction line.
Senses suction line temperature and cycles the compressor off when suction line temperature falls below it's setpoint.
Opens at 29°F (-2°C) and closes at 58°F (14°C).

High Pressure Switch Kit
Protects the system from high pressure conditions that can be a result of fan failure or a blocked/dirty coil.
Manual reset.

Loss of Charge Kit
Helps protect the compressor from damage due to a loss of refrigerant charge.
SPST, normally-closed switch that opens at 15 psig, ±5 psig, and automatically resets at 25 psig, ±3 psig.

Low Ambient Kit (For Expansion Valve Systems Only)
Condensing units operate satisfactorily down to 45°F (7°C) outdoor air temperature without any additional controls.
Low Ambient Control Kit can be field installed, allowing unit operation down to 30°F (-1°C).
Recommended that freezestat and compressor crankcase heater are used with kit.

Thermostat
Thermostat not furnished with unit. See Thermostat bulletins in the Controls section and Lennox Price Book.

REFRIGERANT SYSTEM

Expansion Valve Kits
Must be ordered extra and field installed on certain evaporator units and certain match-ups. See ARI Ratings table.

Refrigerant Line Kits
Refrigerant lines (suction & liquid) are shipped refrigeration clean.
Lines are cleaned, dried, pressurized and sealed at factory.
Suction line fully insulated.
L15 lines are stubbed at both ends.
Kit is not available for 10ACC-60 model and must be field fabricated.

COMPRESSOR ACCESSORIES

Crankcase Heater
Crankcase heater prevents migration of liquid refrigerant into compressor and ensures proper compressor lubrication.

Hard Start Kit
Units are equipped with a PSC compressor motor. This type of motor normally does not need a potential relay and start capacitor. In conditions such as low voltage, kit may be required to increase the compressor starting torque.

Low Ambient Cut-Off
Compressor monitor T6-1469 can be field installed.
Non-adjustable switch (low ambient cut-out) prevents compressor operation when outdoor temperature is below 35°F (2°C).

Sound Cover
A reinforced vinyl compressor cover containing a 1-1/2 in. (38.1 mm) thick batt of 2 to 2.7 lb. density fiberglass insulation.
All open edges are sealed with a one-inch wide hook and loop fastening tape.

Timed-Off Control
Kit prevents compressor short-cycling and allows time for suction and discharge pressure to equalize.
Permits compressor start-up in an unloaded condition.
Automatic reset with 5 minute delay between compressor shut-off and start-up.

CABINET ACCESSORIES

Hail Guard
Constructed of louvered, heavy-gauge steel painted to match cabinet.
Surrounds unit on all four sides for prevent damage to the coil.

Mounting Base
High density polyethylene mounting base is lightweight, sturdy, sound absorbing and will withstand the effects of sun, heat, cold, moisture, oil and refrigerant.
Provides permanent foundation for condensing units.

Unit Stand-Off Kit
Black high density polyethylene feet are available to raise unit off of mounting surface away from damaging moisture.
Four feet are furnished per order number.

FIELD WIRING

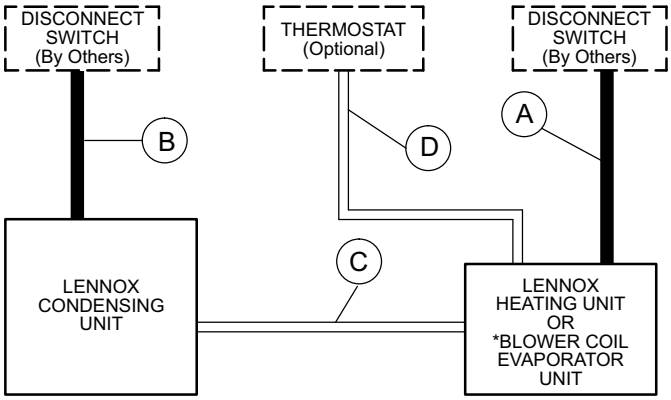

A — Two Wire Power

B — Two Wire Power — See Electrical Data

C — Two Wire Low Voltage — 18 ga. minimum

D — Four Wire Low Voltage (Electro-Mechanical) 18 ga. minimum

Five Wire Low Voltage (Electronic) 18 ga. minimum

NOTE — Field Wiring Not Furnished

All wiring must conform to NEC or CEC and local electrical codes.

[1] Refer to National or Canadian Electrical Code manual to determine wire, fuse and disconnect size requirements.
NOTE - Extremes of operating range are plus 10% and minus 5% of line voltage.

OUTDOOR SOUND DATA

[1] Model Number	Octave Band Sound Power Levels dBA, re 10^{-12} Watts								[1] Sound Rating Number (dB)
	63	125	250	500	1000	2000	4000	8000	
10ACC-018	50	54	63	65	6935	69.5	64.5	59.5	76
10ACC-024	49	54	58	64.5	70	66	62	56	76
10ACC-030	48	56	58.5	65	70	67	63	60	76
10ACC-036	50	54	68.5	72	73	71	65	61	78 (US)/76 (Cdn)
10ACC-042	53.5	58.5	63.5	71	73.5	72	70	62.5	80
10ACC-048	53	61	63	71	74	72.5	80	63	80
10ACC-060	57	58	68.5	73.5	74.5	72.5	71	66	80

NOTE - the octave sound power data does not include tonal correction.
[1] Tested according to ARI Standard 270-95 test conditions.

SPECIFICATIONS

Cooling Data	Model No.	10ACC-018	10ACC-024	10ACC-030	10ACC-036	10ACC-036 (Canada)	10ACC-042	10ACC-048	10ACC-060
	Nominal Tonnage (kW)	1.5 (5.3)	2 (7.0)	2.5 (8.8)	3 (10.6)	3 (10.6)	3.5 (12.3)	4 (14.1)	5 (17.6)
Connections (sweat)	Liquid line o.d. - in. (mm)	[1] 3/8 (9.5)	3/8 (9.5)	3/8 (9.5)	3/8 (9.5)	3/8 (9.5)	3/8 (9.5)	3/8 (9.5)	3/8 (9.5)
	Suction line o.d. - in. (mm)	5/8 (15.9)	3/4 (19.1)	3/4 (19.1)	3/4 (19.1)	3/4 (19.1)	7/8 (22.2)	7/8 (22.2)	1-1/8 (28.6)
[2] HCFC-22 charge furnished		3 lbs. 7 oz. (1.56 kg)	3 lbs. 9 oz. (1.62 kg)	3 lbs. 10 oz. (1.64 kg)	4 lbs. 10 oz. (2.10 kg)	5 lbs. 1 oz. (2.30 kg)	5 lbs. 1 oz. (2.30 kg)	6 lbs. 0 oz. (2.72 kg)	8 lbs. 2 oz. (3.69 kg)
Condenser Coil	Net face area - sq. ft. (m2) Outer	10.0 (0.93)	10.0 (0.93)	10.0 (0.93)	11.41 (1.06)	13.31 (1.24)	13.31 (1.24)	15.11 (1.40)	20.83 (1.94)
	Inner Coil	- - -	- - -	- - -	- - -	- - -	- - -	5.4 (0.50)	- - -
	Tube diameter - in. (mm)	5/16 (7.9)	5/16 (7.9)	5/16 (7.9)	5/16 (7.9)	5/16 (7.9)	5/16 (7.9)	5/16 (7.9)	5/16 (7.9)
	No. of rows	1	1	1	1	1	1	1.37	1
	Fins per inch (m)	18 (709)	18 (709)	18 (709)	22 (866)	22 (866)	22 (866)	22 (866)	22 (866)
Condenser Fan	Diameter - in. (mm)	16 (406)	16 (406)	16 (406)	18 (457)	18 (457)	18 (457)	18 (457)	22 (559)
	No. of blades	3	3	3	4	4	4	4	4
	Motor hp (W)	1/10 (75)	1/10 (75)	1/10 (75)	1/4 (187)	1/4 (187)	1/4 (187)	1/3 (249)	1/3 (249)
	Cfm (L/s)	1730 (815)	1730 (815)	1730 (815)	2510 (1185)	2800 (1320)	2800 (1320)	2950 (1390)	3900 (1840)
	Rpm	1070	1070	1070	1103	1085	1080	1100	1100
	Watts	184	184	184	280	300	299	310	367
Shipping Data -	lbs. (kg) 1 package	126 (57)	126 (57)	124 (56)	140 (64)	140 (64)	140 (64)	196 (89)	199 (90)

ELECTRICAL DATA

General Data	Line voltage data - 60hz - 1ph	208/230V	208/230V	208/230V	208/230V	208/230V	208/230V	208/230V	208/230V
	[3] Maximum overcurrent protection (amps)	20	25	30	35	35	40	50	60
	[4] Minimum circuit ampacity	11.6	16.1	18.4	20.4	20.4	24.3	29.2	35.2
Compressor	Rated load amps	8.6	12.2	14.1	14.9	14.9	17.9	21.8	26.6
	Locked rotor amps	49	61	73	96	96	96	131	170
	Power factor	0.97	0.96	0.95	0.90	0.90	0.90	0.80	0.90
Condenser Fan Motor	Full load amps	0.8	0.8	0.8	1.7	1.7	1.7	1.9	1.9
	Locked rotor amps	1.2	1.2	1.2	3.1	3.1	3.1	4.1	4.1

OPTIONAL ACCESSORIES - MUST BE ORDERED EXTRA

Compressor Crankcase Heater		**68887**	**90P12**	**90P12**	**68887**	**68887**	**90P12**	**90P12**	**90P12**
Compressor Hard Start Kit		**64J09**	**10J42**	**10J42**	**64J09**	**64J09**	**10J42**	**81J69**	**81J69**
Compressor Low Ambient Cut-Off		**45F08**	**45F08**	**45F08**	**45F08**	**45F08**	**45F08**	**45F08**	**45F08**
Compressor Sound Cover		**53J39**	**69J03**	**69J03**	**53J39**	- - -	**69J03**	**69J03**	**69J03**
Compressor Time-Off Control		**47J27**	**47J27**	**47J27**	**47J27**	**47J27**	**47J27**	**47J27**	**47J27**
Freezestat	3/8 in. tubing	**93G35**	**93G35**	**93G35**	**93G35**	**93G35**	**93G35**	**93G35**	**93G35**
	1/2 in. tubing	**39H29**	**39H29**	**39H29**	**39H29**	**39H29**	**39H29**	**39H29**	**39H29**
	5/8 in. tubing	**50A93**	**50A93**	**50A93**	**50A93**	**50A93**	**50A93**	**50A93**	**50A93**
Hail Guard		**45M58**	**45M58**	**45M58**	**17L71**	**17L72**	**17L72**	**17L73**	**17L74**
High Pressure Switch Kit		**94J46**	**94J46**	**94J46**	**94J46**	**94J46**	**94J46**	**94J46**	**94J46**
Loss of Charge Kit		**94J47**	**94J47**	**94J47**	**94J47**	**94J47**	**94J47**	**94J47**	**94J47**
Low Ambient Kit (TXV systems only)		**24H77**	**24H77**	**24H77**	**24H77**	**24H77**	**24H77**	**24H77**	**24H77**
Mounting Base	Catalog Number	MB2-S **69J06**	MB2-S **69J06**	MB2-S **69J06**	MB2-L **69J07**	MB2-L **69J07**	MB2-L **69J07**	MB2-L **69J07**	MB2-L **69J07**
	Ship. Wt. - lbs. (kg)	6 (3)	6 (3)	6 (3)	15 (7)	15 (7)	15 (7)	15 (7)	15 (7)
Refrigerant Line Sets	15 ft. (4.6 m) length	L15-21-15	L15-41-15	L15-41-15	L15-41-15	L15-41-15	L15-65-15	L15-65-15	Field Fabricate
	20 ft. (6 m) length	L15-21-20	L15-41-20	L15-41-20	L15-41-20	L15-41-20	Not Available		
	25 ft. (8 m) length	L15-21-25	Not Available		Not Available		Not Available		
	30 ft. (9.1 m) length	Not Available	L15-41-30	L15-41-30	L15-41-30	L15-41-30	L15-65-30	L15-65-30	
	35 ft. (11 m) length	L15-21-35	Not Available		Not Available		Not Available		
	40 ft. (12.2 m) length	Not Available	L15-41-40	L15-41-40	L15-41-40	L15-41-40	L15-65-40	L15-65-40	
	50 ft. (15.2 m) length	L15-21-50	L15-41-50	L15-41-50	L15-41-50	L15-41-50	L15-65-50	L15-65-50	
Unit Stand-Off Kit		**94J45**	**94J45**	**94J45**	**94J45**	**94J45**	**94J45**	**94J45**	**94J45**

[1] 3/8 in. x 5/16 in. (9.5 mm x 7.9 mm) reducer bushing (not furnished) is required for liquid line connection.
[2] Refrigerant charge sufficient for 15 ft. (4.6 m) length of refrigerant lines.
[3] HACR type breaker or fuse.
[4] Refer to National or Canadian Electrical Code manual to determine wire, fuse and disconnect size requirements.

DIMENSIONS - INCHES (MM)

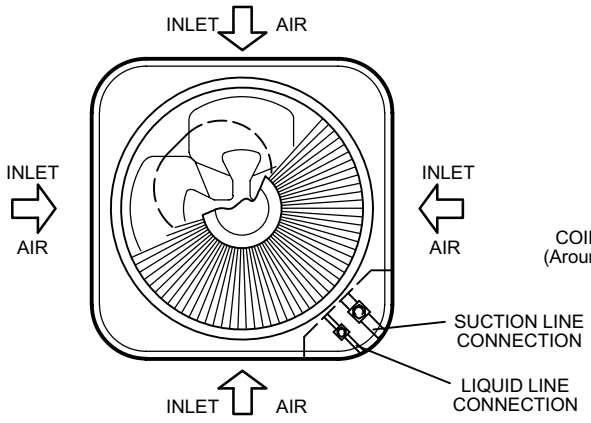

TOP VIEW

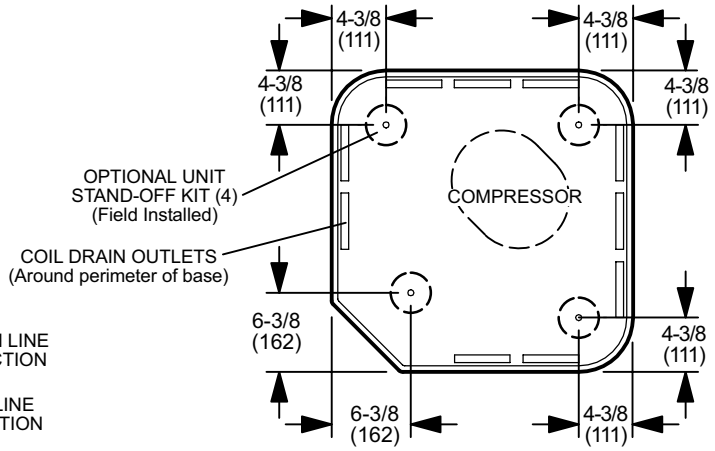

TOP VIEW BASE SECTION

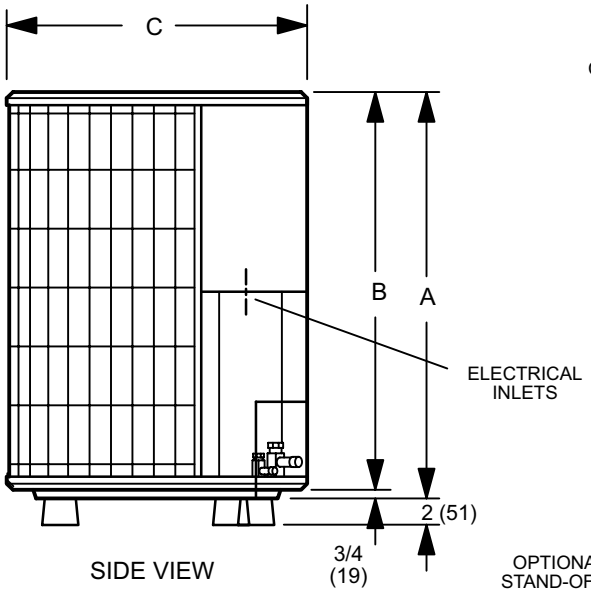

SIDE VIEW

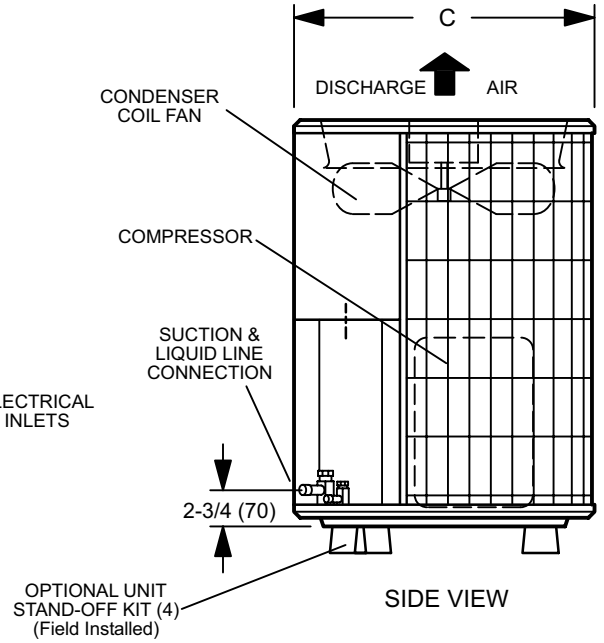

SIDE VIEW

Model No.	A		B		C	
	in.	mm	in.	mm	in.	mm
10ACC-018, 10ACC-024, 10ACC-030	25	635	24-1/4	616	22-1/4	565
10ACC-036	25	635	24-1/4	616	24-1/4	616
10ACC-036 (Canada only) 10ACC-042	29	737	28-1/4	718	24-1/4	616
10ACC-048	33	838	32-1/4	819	24-1/4	616
10ACC-060	37	940	36-1/4	921	28-1/4	718

INSTALLATION CLEARANCES - IN. (MM)

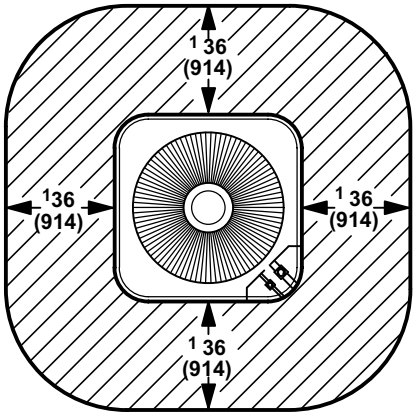

[1] One of the coil sides adjacent to control box must be 30 in. (762 mm) for service.
One of the remaining sides may be 12 in. (914 mm)
One of the remaining sides may be 6 inches (305 mm)
NOTE — 48 in. (1219 mm) clearance required on top of unit.
NOTE — 24 in. (610 mm) required between two units

ARI RATINGS

Outdoor Unit Model No. Unit Size [1] Sound Rating Number		[2] ARI Standard 210/240 Ratings Cooling Capacity Btuh	kW	Efficiency SEER	EER	Total Unit Watts	Indoor Unit Model No.	[3] Expansion Device RFC Orifice size / TXV
10ACC-018 1.5 Ton (76 dB)	**Up-Flow Coils**	17,400	5.1	10.20	9.50	1830	[6] C33-18A	RFC **0.053** / TXV **26K49**
		17,800	5.2	10.35	9.65	1840	[4] C26-21	[5] Factory Installed TXV
		18,100	5.3	10.45	9.80	1845	C23-26	RFC **0.053** / TXV **26K49**
		18,400	5.4	10.60	9.90	1855	C33-24A/B	RFC **0.053** / TXV **26K49**
	Down-Flow Coils	17,500	5.1	10.20	9.55	1830	CR26-18N-F	RFC **0.053** / TXV **26K49**
	Horizontal Coils	17,700	5.2	10.15	9.60	1840	CH23-21	RFC **0.053** / TXV **26K49**
		18,500	5.4	10.70	9.95	1860	CH33-24/30A-2F	RFC **0.053** / TXV **26K49**
	Blower Coil Units	17,700	5.2	10.40	9.65	1830	[4] CB29M-21/26 (Multi-Position)	[5] Factory Installed TXV
		17,700	5.2	10.40	9.65	1830	[4] CB28UH-018/024 (Up-Flow/Horiz.)	[5] Factory Installed TXV
		19,100	5.6	10.80	10.00	1910	[4] CB30M-21/26 (Multi-Position)	[5] Factory Installed TXV
		19,100	5.6	10.80	10.00	1910	[4] CB30U-21/26 (Up-Flow)	[5] Factory Installed TXV
10ACC-024 2 Ton (76 dB)	**Up-Flow Coils**	22,600	6.6	10.00	9.05	2495	C23-26	RFC **0.061** / TXV **26K49**
		23,000	6.7	10.10	9.15	2515	C23-31	RFC **0.061** / TXV **26K49**
		23,000	6.7	10.10	9.15	2515	C26-26	[5] Factory Installed TXV
		23,200	6.8	10.20	9.25	2505	[6] C33-24A/B	RFC **0.061** / TXV **26K49**
		23,600	6.9	10.00	9.30	2540	C33-30A/B	RFC **0.061** / TXV **26K49**
		24,000	7.0	10.40	9.40	2550	C33-36A/B/C	RFC **0.061** / TXV **26K49**
		24,200	7.1	10.45	9.45	2565	C26-31	[5] Factory Installed TXV
	Up-Flow Coils/Furnace	23,800	7.0	10.85	9.80	2430	C33-24A with G60UHV-36A-070	TXV **26K49**
		23,800	7.0	11.05	9.95	2390	C33-24B with G60UHV-36B-090	TXV **26K49**
		24,200	7.1	10.95	9.90	2445	C33-30A with G60UHV-36A-070	TXV **26K49**
		24,200	7.1	11.20	10.05	2405	C33-30B with G60UHV-36B-090	TXV **26K49**
		24,400	7.2	11.05	9.90	2460	C33-36A with G60UHV-36A-070	TXV **26K49**
		24,400	7.2	11.25	10.10	2415	C33-36B with G60UHV-36B-090	TXV **26K49**
		22,000	6.4	10.50	9.45	2325	C26-21 with G32V3-75	[5] Factory Installed TXV
		22,800	6.7	10.75	9.70	2355	C23-26 with G32V3-75	TXV **26K49**
		23,200	6.8	10.90	9.75	2375	C26-26 with G32V3-75	[5] Factory Installed TXV
		23,200	6.8	10.75	9.75	2375	C23-31 with G32V3-75	TXV **26K49**
		24,400	7.2	11.20	10.05	2425	C26-31 with G32V3-75	[5] Factory Installed TXV
	Down-Flow Coils	23,800	7.0	10.35	9.35	2550	CR26-30N-F	RFC **0.061** / TXV **26K49**
	Down-Flow Coils/Furnace	21,600	6.3	10.25	9.25	2330	CR26-18N-F with GHR32V3-75	TXV **26K49**
		24,000	7.0	11.10	10.00	2405	CR26-30N-F with GHR32V3-75	TXV **26K49**
	Horizontal Coils	22,600	6.6	10.00	9.05	2500	CH23-31	RFC **0.061** / TXV **26K49**
		23,400	6.9	10.25	9.25	2535	CH33-24/30A-2F	RFC **0.061** / TXV **26K49**
		23,800	7.0	10.40	9.35	2550	CH33-36A/B/C-2F	RFC **0.061** / TXV **26K49**
	Horizontal Coils/Furnace	24,000	7.0	10.90	9.85	2440	CH33-30A-2F with G60UHV-36A-070	TXV **26K49**
		24,400	7.2	11.05	9.95	2455	CH33-36A-2F with G60UHV-36A-070	TXV **26K49**
		24,400	7.2	11.25	10.10	2415	CH33-36B-2F with G60UHV-36B-090	TXV **26K49**
		23,000	6.7	10.65	9.65	2385	CH23-31 with GHR32V3-75	TXV **26K49**
	Blower Coil Units	21,600	6.3	10.00	8.90	2425	CB29M-21/26 (Multi-Position)	[5] Factory Installed TXV
		21,600	6.3	10.00	8.90	2425	CB28UH-018/024 (Up-Flow/Horizontal)	[5] Factory Installed TXV
		22,800	6.7	10.10	9.10	2505	CB29M-31 (Multi-Position)	[5] Factory Installed TXV
		22,800	6.7	10.10	9.10	2505	CB28UH-030 (Up-Flow/Horizontal)	[5] Factory Installed TXV
		23,800	7.0	10.45	9.40	2535	CB30M-21/26 (Multi-Position)	[5] Factory Installed TXV
		23,800	7.0	10.45	9.40	2535	CB30U-21/26 (Up-Flow)	[5] Factory Installed TXV
		24,200	7.1	10.80	9.70	2495	CB30M-31 (Multi-Position)	[5] Factory Installed TXV
		24,200	7.1	10.80	9.70	2495	CB30U-31 (Up-Flow)	[5] Factory Installed TXV

NOTE - Ratings for all C23, C26 and C33 coils include both cased and uncased coils.

[1] Sound Rating Number rated in accordance with test conditions included in ARI Standard 270.

[2] Certified in accordance with USE certification program which is based on ARI Standard 210/240; 95°F (35°C) outdoor air temperature, 80°F (27°C) db / 67°F (19°C) wb entering evaporator air with 25 ft. (7.6 m) of connecting refrigerant lines.

[3] Kit is required and must be ordered extra, unless shown as factory installed. RFC orifice is furnished with condensing unit.

[4] Start Kit is required with 1 phase models for proper system operation. Must be ordered extra. See Specifications table for order number.

[5] Furnished as standard with coil.

[6] Most popular evaporator coil match with RFC orifice.

ARI RATINGS

Outdoor Unit Model No. Unit Size [1] Sound Rating Number		[2] ARI Standard 210/240 Ratings Cooling Capacity Btuh	kW	Efficiency SEER	EER	Total Unit Watts	Indoor Unit Model No.	[3] Expansion Device RFC Orifice / TXV
10ACC-030 2.5 Ton (76 dB)	**Up-Flow Coils**	28,600	8.4	10.10	8.90	3215	[4] C33-30A/B	RFC **0.065** / TXV **26K49**
		29,000	8.5	10.20	9.00	3225	C33-36A/B/C	RFC **0.065** / TXV **26K49**
		28,000	8.2	10.05	8.90	3150	C23-41	RFC **0.065** / TXV **26K49**
		29,200	8.6	10.25	9.00	3240	C26-31	[5] Factory Installed TXV
		29,400	8.6	10.30	9.05	3250	C26-41	[5] Factory Installed TXV
	Up-Flow Coils/Furnace	28,800	8.4	10.60	9.35	3075	C33-30A with G60UHV-36A-70	TXV **26K49**
		29,000	8.5	10.70	9.40	3085	C33-36A with G60UHV-36A-070	TXV **26K49**
		29,000	8.5	11.05	9.65	3000	C33-30B with G60UHV-36B-090	TXV **26K49**
		29,400	8.6	11.10	9.75	3015	C33-36B with G60UHV-36B-090	TXV **26K49**
		28,000	8.2	10.65	9.35	2990	C23-31 with G32V-75	TXV **26K49**
		28,400	8.3	10.75	9.45	3005	C23-41 with G32V-75	TXV **26K49**
		29,400	8.6	11.00	9.65	3045	C26-31 with G32V-75	[5] Factory Installed TXV
		29,600	8.7	11.05	9.70	3055	C26-41 with G32V-75	[5] Factory Installed TXV
	Down-Flow Coils	28,600	8.4	10.10	8.90	3215	CR26-30N-F	RFC **0.065** / TXV **26K49**
		29,200	8.6	10.30	9.00	3240	CR26-36N/W-F	RFC **0.065** / TXV **26K49**
	Down-Flow Coils/Furnace	28,800	8.4	10.70	9.40	3060	CR26-30N-F with GHR32V3-75	TXV **26K49**
		29,400	8.6	10.90	9.55	3085	CR26-36N/W-F with GHR32V3-75	TXV **26K49**
	Horizontal Coils	28,200	8.3	10.10	8.90	3165	CH33-24/30A-2F	RFC **0.065** / TXV **26K49**
		28,800	8.4	10.15	8.95	3220	CH33-36C-2F	RFC **0.065** / TXV **26K49**
		29,000	8.5	10.15	9.00	3225	CH33-36A-2F	RFC **0.065** / TXV **26K49**
		29,000	8.5	10.20	9.00	3230	CH33-36B-2F	RFC **0.065** / TXV **26K49**
		29,400	8.6	10.20	9.05	3245	CH23-41	RFC **0.065** / TXV **26K49**
	Horizontal Coils/Furnace	28,400	8.3	10.55	9.30	3060	CH33-24/30A-2F with G60UHV-36A-070	TXV **26K49**
		29,000	8.5	10.70	9.40	3085	CH33-36A-2F with G60UHV-36A-070	TXV **26K49**
		29,200	8.6	11.10	9.70	3005	CH33-36C-2F with G60UHV-36B-090	TXV **26K49**
		29,400	8.6	11.10	9.75	3010	CH33-36B-2F with G60HUV-36B-090	TXV **26K49**
		27,800	8.1	10.50	9.20	3020	CH23-31 with GHR32V3-75	TXV **26K49**
		29,600	8.7	10.85	9.60	3090	CH23-41 with GHR32V3-75	TXV **26K49**
	Blower Coil Units	28,000	8.2	10.05	8.85	3165	[6] CB29M-41 (Multi-Position)	[5] Factory Installed TXV
		28,000	8.2	10.05	8.85	3165	[6] CB28UH-036 (Up-Flow/Horizontal)	[5] Factory Installed TXV
		29,000	8.5	10.40	9.20	3155	CB30M-21/26 (Multi-Position)	[5] Factory Installed TXV
		29,000	8.5	10.40	9.20	3155	CB30U-21/26 (Up-Flow)	[5] Factory Installed TXV
		29,400	8.6	10.80	9.50	3100	CB30M-31 (Multi-Position)	[5] Factory Installed TXV
		29,400	8.6	10.80	9.50	3100	CB30U-31 (Up-Flow)	[5] Factory Installed TXV
		29,400	8.6	10.65	9.35	3145	CB30M-41 (Multi-Position)	[5] Factory Installed TXV
		29,400	8.6	10.65	9.35	3145	CB30U-41 (Up-Flow)	[5] Factory Installed TXV

NOTE - Ratings for all C23, C26 and C33 coils include both cased and uncased coils.

1 Sound Rating Number rated in accordance with test conditions included in ARI Standard 270.

2 Certified in accordance with USE certification program which is based on ARI Standard 210/240; 95°F (35°C) outdoor air temperature, 80°F (27°C) db / 67°F (19°C) wb entering evaporator air with 25 ft. (7.6 m) of connecting refrigerant lines.

3 Kit is required and must be ordered extra, unless shown as factory installed. RFC orifice is furnished with condensing unit.

4 Most popular evaporator coil match with RFC orifice.

5 Furnished as standard with coil.

6 **Time Delay Relay Kit 58M81 must be ordered extra for field installation.**

ARI RATINGS

Outdoor Unit Model No. Unit Size [1] Sound Rating Number		[2] ARI Standard 210/240 Ratings Cooling Capacity Btuh	kW	Efficiency SEER	EER	Total Unit Watts	Indoor Unit Model No.	[3] Expansion Device RFC Orifice / TXV
10ACC-036 3 Ton (78 dB) US (76 dB) Canada	**Up-Flow Coils**	33,400	9.8	10.00	8.70	3850	C23-46	RFC **0.077** / TXV **26K49**
		33,800	9.9	10.00	8.80	3840	[4] C33-36A/B/C	RFC **0.077** / TXV **26K49**
		34,200	10.0	10.00	8.80	3890	[5] C26-31	[6] Factory Installed TXV
		34,400	10.1	10.00	8.80	3905	[5] C26-41	[6] Factory Installed TXV
		34,400	10.1	10.00	8.80	3905	[5] C26-46	[7] TXV **26K49**
		34,600	10.1	10.00	8.90	3880	C33-42B	RFC **0.077** / TXV **26K49**
		35,200	10.3	10.20	8.95	3935	C23-51	RFC **0.077** / TXV **26K49**
		36,000	10.6	10.25	9.10	3950	C33-44C	RFC **0.077** / TXV **26K49**
		36,000	10.6	10.25	9.10	3950	C33-48B	RFC **0.077** / TXV **26K49**
	Up-Flow Coils/Furnace	34,000	10.0	10.55	9.30	3660	C33-36B/C with G60UHV-36B-090	TXV **26K49**
		34,000	10.0	10.55	9.30	3660	C33-42B with G60UHV-36B-090	TXV **26K49**
		34,400	10.1	10.30	9.10	3770	C33-36A with G60UHV-36A-070	TXV **26K49**
		35,400	10.4	10.85	9.50	3730	C33-44C with G60UHV-36B-090	TXV **26K49**
		35,400	10.4	10.85	9.50	3730	C33-48B with G60UHV-36B-090	TXV **26K49**
		33,200	9.7	10.10	8.85	3750	C23-46 with G32V3-75	TXV **26K49**
		34,200	10.0	10.30	9.00	3790	[5] C26-31 with G32V3-75	[6] Factory Installed TXV
		34,400	10.1	10.35	9.05	3805	[5] C26-41 with G32V3-75	[6] Factory Installed TXV
		34,400	10.1	10.35	9.05	3805	[5] C26-46 with G32V3-75	[7] TXV **26K49**
		35,200	10.3	10.45	9.20	3835	C23-51 with G32V3-75	TXV **26K49**
	Down-Flow Coils	34,200	10.0	10.00	8.80	3890	CR26-36	RFC **0.077** / TXV **26K49**
	Down-Flow Coils/Furnace	34,200	10.0	10.35	9.05	3785	CR26-36 with GHR32V3-75	TXV **26K49**
	Horizontal Coils	33,800	9.9	10.00	8.70	3875	CH33-36A/C-2F	RFC **0.077** / TXV **26K49**
		34,000	10.0	10.00	8.75	3880	CH33-36B-2F	RFC **0.077** / TXV **26K49**
		34,800	10.2	10.15	8.90	3915	CH23-41	RFC **0.077** / TXV **26K49**
		35,200	10.3	10.20	8.95	3940	CH33-42B-2F	RFC **0.077** / TXV **26K49**
		35,600	10.4	10.30	9.00	3955	CH33-44/48B-2F	RFC **0.077** / TXV **26K49**
		36,000	10.6	10.35	9.05	3970	CH33-48C-2F	RFC **0.077** / TXV **26K49**
	Horizontal Coils/Furnace	33,800	9.9	10.25	9.00	3760	CH33-36A-2F with G60UHV-36A-070	TXV **26K49**
		33,800	9.9	10.55	9.25	3655	CH33-36C-2F with G60UHV-36B-090	TXV **26K49**
		34,000	10.0	10.60	9.30	3660	CH33-36B-2F with G60UHV-36B-090	TXV **26K49**
		35,200	10.3	10.85	9.45	3725	CH33-42B-2F with G60UHV-36B-090	TXV **26K49**
		35,600	10.4	10.90	9.50	3740	CH33-44/48B-2F with G60UHV-36B-090	TXV **26K49**
		36,000	10.6	10.90	9.60	3750	CH33-48C-2F with G60UHV-36B-090	TXV **26K49**
		34,800	10.2	10.40	9.15	3810	CH23-41 with GHR32V3-75	TXV **26K49**
	Blower Coil Units	34,000	10.0	10.00	8.75	3890	[5] CB29M-46 (Multi-Position)	[7] TXV **26K49**
		34,000	10.0	10.00	8.75	3890	[5] CB28UH-042 (Up-Flow/Horizontal)	[7] TXV **26K49**
		34,000	10.0	10.30	9.00	3775	[5] CB30M-31 (Multi-Position)	[6] Factory Installed TXV
		34,000	10.0	10.30	9.00	3775	[5] CB30U-31 (Up-Flow)	[6] Factory Installed TXV
		34,400	10.1	10.20	8.95	3840	[5] CB30M-41 (Multi-Position)	[6] Factory Installed TXV
		34,400	10.1	10.20	8.95	3840	[5] CB30U-41/46 (Up-Flow)	[7] TXV **26K49**
		34,400	10.1	10.25	8.95	3840	[5] CB30M-46 (Multi-Position)	[7] TXV **26K49**

NOTE - Ratings for all C23, C26 and C33 coils include both cased and uncased coils.

1 Sound Rating Number rated in accordance with test conditions included in ARI Standard 270.

2 Certified in accordance with USE certification program which is based on ARI Standard 210/240; 95°F (35°C) outdoor air temperature, 80°F (27°C) db / 67°F (19°C) wb entering evaporator air with 25 ft. (7.6 m) of connecting refrigerant lines.

3 Kit is required and must be ordered extra, unless shown as factory installed. RFC orifice is furnished with condensing unit.

4 Most popular evaporator coil match with RFC orifice.

5 Start Kit is required with 1 phase models for proper system operation. Must be ordered extra. See Specifications table for order number,

6 Furnished as standard with coil.

7 Factory installed TXV MUST be replaced with TXV kit shown.

ARI RATINGS

Outdoor Unit Model No. Unit Size [1] Sound Rating Number		[2] ARI Standard 210/240 Ratings Cooling Capacity Btuh	kW	Efficiency SEER	EER	Total Unit Watts	Indoor Unit Model No.	[3] Expansion Device RFC Orifice / TXV
10ACC-042 3.5 Ton (80 dB)	**Up-Flow Coils**	38,500	11.3	10.00	8.80	4380	C23-46	RFC **0.080** / TXV **26K35**
		39,000	11.4	10.25	9.05	4310	C26-41	[5] Factory Installed TXV
		39,000	11.4	10.20	8.95	4355	C26-46	[5] Factory Installed TXV
		39,500	11.6	10.20	9.00	4395	[6] C33-42B	RFC **0.080** / TXV **26K35**
		41,000	12.0	10.55	9.25	4430	C33-44C	RFC **0.080** / TXV **26K35**
		41,000	12.0	10.55	9.25	4430	C33-48B/C	RFC **0.080** / TXV **26K35**
		41,000	12.0	10.55	9.25	4430	C23-51	RFC **0.080** / TXV **26K35**
		41,000	12.0	10.55	9.25	4430	C26-51/65	[5] Factory Installed TXV
	Up-Flow Coils/Furnace	39,500	11.6	10.60	9.25	4265	C33-42B with G60UHV-60C-090	TXV **26K35**
		41,500	12.2	11.00	9.65	4305	C33-44C with G60UHV-60C-090	TXV **26K35**
		41,500	12.2	11.00	9.65	4305	C33-48B/C with G60UHV-60C-090	TXV **26K35**
		39,000	11.4	10.85	9.45	4125	C23-46 with G32V5-100	TXV **26K35**
		39,500	11.6	11.15	9.70	4065	C26-41 with G32V5-100	[5] Factory Installed TXV
		39,500	11.6	11.05	9.65	4100	C26-46 with G32V5-125	[5] Factory Installed TXV
		41,500	12.2	11.40	9.95	4180	C23-51 with G32V5-100	TXV **26K35**
		41,500	12.2	11.35	9.95	4180	C26-51 with G32V5-125	[5] Factory Installed TXV
	Down-Flow Coils	41,000	12.0	10.50	9.25	4430	CR26-48N/W-F	RFC **0.080** / TXV **26K35**
	Down-Flow Coils/Furnace	41,000	12.0	11.25	9.85	4165	CR26-48N/W-F with GHR32V5-100	TXV **26K35**
	Horizontal Coils	40,500	11.9	10.60	9.25	4385	CH33-42B-2F	RFC **0.080** / TXV **26K35**
		40,500	11.9	10.60	9.25	4385	CH33-44/48B-2F	RFC **0.080** / TXV **26K35**
		40,500	11.9	10.40	9.15	4415	CH23-41	RFC **0.080** / TXV **26K35**
		40,500	11.9	10.40	9.15	4415	CH23-51	RFC **0.080** / TXV **26K35**
		42,000	12.3	10.75	9.45	4445	CH33-48C-2F	RFC **0.080** / TXV **26K35**
	Horizontal Coils/Furnace	41,000	12.0	11.05	9.65	4245	CH33-42B-2F with G60UHV-60C-090	TXV **26K35**
		41,000	12.0	11.05	9.65	4245	CH33-44/48B-2F with G60UHV-60C-090	TXV **26K35**
		42,500	12.5	11.20	9.85	4320	CH33-48C-2F with G60UHV-60C-090	TXV **26K35**
		40,500	11.9	11.20	9.75	4155	CH23-41 with GHR32V5-100	TXV **26K35**
		41,000	12.0	11.25	9.85	4165	CH23-51 with GHR32V5-100	TXV **26K35**
	Blower Coil Units	39,000	11.4	10.15	8.90	4380	CB29M-46 (Multi-Position)	[5] Factory Installed TXV
		39,000	11.4	10.15	8.90	4380	CB28UH-042 (Up-Flow/Horizontal)	[5] Factory Installed TXV
		39,000	11.4	10.45	9.10	4275	CB30M-41 (Multi-Position)	[5] Factory Installed TXV
		39,000	11.4	10.45	9.10	4275	CB30U-41/46 (Up-Flow)	[5] Factory Installed TXV
		40,000	11.7	10.55	9.30	4310	CB30M-46 (Multi-Position)	[5] Factory Installed TXV
		40,000	11.7	10.60	9.30	4295	CB31MV-41 (Multi-Position)	[5] Factory Installed TXV
		40,500	11.9	10.15	8.95	4525	CB29M-51 (Multi-Position)	[5] Factory Installed TXV
		40,500	11.9	10.15	8.95	4525	CB28UH-048 (Up-Flow/Horizontal)	[5] Factory Installed TXV
		42,000	12.3	11.05	9.70	4330	CB30M-51 (Multi-Position)	[5] Factory Installed TXV
		42,000	12.3	11.05	9.70	4330	CB30U-51 (Up-Flow)	[5] Factory Installed TXV
		42,500	12.5	11.50	10.05	4225	CB31MV-51 (Multi-Position)	[5] Factory Installed TXV

NOTE - Ratings for all C23, C26 and C33 coils include both cased and uncased coils.

1 Sound Rating Number rated in accordance with test conditions included in ARI Standard 270.

2 Certified in accordance with USE certification program which is based on ARI Standard 210/240; 95°F (35°C) outdoor air temperature, 80°F (27°C) db / 67°F (19°C) wb entering evaporator air with 25 ft. (7.6 m) of connecting refrigerant lines.

3 Kit is required and must be ordered extra, unless shown as factory installed. RFC orifice is furnished with condensing unit.

4 Factory installed TXV MUST be replaced with TXV kit shown.

5 Furnished as standard with coil.

6 Most popular evaporator coil match with RFC orifice.

ARI RATINGS

Outdoor Unit Model No. Unit Size [1] Sound Rating Number		[2] ARI Standard 210/240 Ratings Cooling Capacity Btuh	kW	Efficiency SEER	EER	Total Unit Watts	Indoor Unit Model No.	[3] Expansion Device RFC Orifice / TXV
10ACC-048 4 Ton (80 dB)	**Up-Flow Coils**	41,500	12.2	10.25	9.00	4600	C26-41	[4] TXV **26K35**
		42,000	12.3	10.30	9.10	4610	C26-46	[5] Factory Installed TXV
		44,000	12.9	10.30	9.20	4780	C23-51	RFC **0.086** / TXV **26K35**
		45,500	13.3	10.50	9.40	4850	[6] C33-48B/C	RFC **0.086** / TXV **26K35**
		45,500	13.3	10.50	9.40	4850	C23-51/65	RFC **0.086** / TXV **26K35**
		46,000	13.5	10.60	9.45	4875	C33-50/60C	RFC **0.086** / TXV **26K35**
		46,000	13.5	10.70	9.45	4875	C33-60D	RFC **0.086** / TXV **26K35**
		46,000	13.5	10.65	9.45	4875	C26-51/65	[5] Factory Installed TXV
		47,500	13.9	10.85	9.65	4920	C26-65EAP	[5] Factory Installed TXV
	Up-Flow Coils/Furnace	45,500	13.3	10.90	9.70	4695	C33-48B/C with G60UHV-60C-090	TXV **26K35**
		46,000	13.5	11.10	9.80	4705	C33-50/60C with G60UHV-60C-090	TXV **26K35**
		46,500	13.6	11.20	9.90	4690	C33-60D with G60UHV-60D-135	TXV **26K35**
		42,000	12.3	11.00	9.65	4350	C26-41 with G32V5-100	[4] TXV **26K35**
		42,500	12.5	11.00	9.75	4360	C26-46 with G32V5-100	[5] Factory Installed TXV
		44,500	13.0	11.00	9.80	4535	C23-51 with G32V5-100	TXV **26K35**
		46,000	13.5	11.15	9.95	4630	C23-51/65 with G32V5-125	TXV **26K35**
		46,000	13.5	11.35	9.90	4640	C26-51/65 with G32V5-125	[5] Factory Installed TXV
		48,000	14.1	11.55	10.25	4685	C26-65EAP with G32V5-125	[5] Factory Installed TXV
	Down-Flow Coils	41,500	12.2	10.00	8.90	4675	CR26-48N-F	RFC **0.086** / TXV **26K35**
		42,500	12.5	10.00	8.90	4775	CR26-48W-F	RFC **0.086** / TXV **26K35**
		43,500	12.7	10.25	9.20	4725	CR26-60N-F	RFC **0.086** / TXV **26K35**
		44,000	12.9	10.15	9.10	4825	CR26-60W-F	RFC **0.086** / TXV **26K35**
	Down-Flow Coils/Furnace	42,000	12.3	10.60	9.30	4525	CR26-48N/W-F with GHR32V5-100	TXV **26K35**
		44,000	12.9	10.85	9.65	4550	CR26-60N-F with GHR32V5-125	TXV **26K35**
		44,500	13.0	10.85	9.75	4565	CR26-60W-F with GHR32V5-125	TXV **26K35**
	Horizontal Coils	43,500	12.7	10.00	9.05	4800	CH23-51	RFC **0.086** / TXV **26K35**
		44,000	12.9	10.60	9.35	4700	CH33-44/48B-2F	RFC **0.086** / TXV **26K35**
		44,000	12.9	10.20	9.10	4825	CH23-65	RFC **0.086** / TXV **26K35**
		45,000	13.2	10.65	9.40	4780	CH33-48C-2F	RFC **0.086** / TXV **26K35**
		46,000	13.5	10.80	9.60	4795	CH33-50/60C-2F	RFC **0.086** / TXV **26K35**
		46,000	13.5	10.55	9.45	4880	CH23-68	RFC **0.086** / TXV **26K35**
		46,500	13.6	10.70	9.55	4880	CH33-60D-2F	RFC **0.086** / TXV **26K35**
	Horizontal Coils/Furnace	44,500	13.0	11.00	9.75	4555	CH33-44/48B-2F with G60UHV-60C-090	TXV **26K35**
		45,500	13.3	11.00	9.80	4640	CH33-48C-2F with G60UHV-60C-090	TXV **26K35**
		46,000	13.5	11.20	9.85	4665	CH33-50/60C-2F with G60UHV-60C-090	TXV **26K35**
		46,500	13.6	11.20	9.90	4695	CH33-60D-2F with G60UHV-60D-135	TXV **26K35**
		43,500	12.7	10.75	9.60	4525	CH23-51 with GHR32V5-100	TXV **26K35**
		44,000	12.9	10.85	9.70	4540	CH23-65 with GHR32V5-100	TXV **26K35**
		46,000	13.5	11.20	10.00	4600	CH23-68 with GHR32V5-100	TXV **26K35**
	Blower Coil Units	42,000	12.3	10.35	9.20	4565	CB30M-41 (Multi-Position)	[4] TXV **26K35**
		42,000	12.3	10.35	9.20	4565	CB30U-41/46 (Up-Flow)	[5] Factory Installed TXV
		42,500	12.5	10.45	9.25	4605	CB30M-46 (Multi-Position)	[5] Factory Installed TXV
		43,000	12.6	10.00	8.90	4825	CB29M-51 (Multi-Position)	[5] Factory Installed TXV
		43,000	12.6	10.00	8.90	4825	CB28UH-048 (Up-Flow/Horizontal)	[5] Factory Installed TXV
		43,500	12.7	10.00	8.90	4890	CB29M-65 (Multi-Position)	[5] Factory Installed TXV
		43,500	12.7	10.00	8.90	4890	CB28UH-060 (Up-Flow/Horizontal)	[5] Factory Installed TXV
		45,500	13.3	10.90	9.65	4725	CB30M-51 (Multi-Position)	[5] Factory Installed TXV
		45,500	13.3	10.90	9.65	4725	CB30U-51 (Up-Flow)	[5] Factory Installed TXV
		46,000	13.5	11.10	9.85	4680	CB31MV-51 (Multi-Position)	[5] Factory Installed TXV
		47,000	13.8	11.05	9.80	4800	CB30M-65 (Multi-Position)	[5] Factory Installed TXV
		47,000	13.8	11.05	9.80	4800	CB30U-65 (Up-Flow)	[5] Factory Installed TXV
		47,500	13.9	11.40	10.05	4720	CB31MV-65 (Multi-Position)	[5] Factory Installed TXV

NOTE - Ratings for all C23, C26 and C33 coils include both cased and uncased coils.

1 Sound Rating Number rated in accordance with test conditions included in ARI Standard 270.

2 Certified in accordance with USE certification program which is based on ARI Standard 210/240; 95°F (35°C) outdoor air temperature, 80°F (27°C) db / 67°F (19°C) wb entering evaporator air with 25 ft. (7.6 m) of connecting refrigerant lines.

3 Kit is required and must be ordered extra, unless shown as factory installed. RFC orifice is furnished with condensing unit.

4 Factory installed TXV MUST be replaced with TXV kit shown.

5 Furnished as standard with coil.

6 Most popular evaporator coil match with RFC orifice.

ARI RATINGS

Outdoor Unit Model No. Unit Size [1] Sound Rating Number		[2] ARI Standard 210/240 Ratings Cooling Capacity Btuh	kW	Efficiency SEER	EER	Total Unit Watts	Indoor Unit Model No.	[3] Expansion Device RFC Orifice / TXV
10ACC-060 5 Ton (80 dB)	**Up-Flow Coils**	54,500	16.0	10.15	8.85	6170	C26-51/65	[4] Factory Installed TXV
		56,500	16.6	10.45	9.05	6245	C23-51/65	RFC **0.098** / TXV **26K35**
		56,500	16.6	10.55	9.20	6155	C33-50/60C	RFC **0.098** / TXV **26K35**
		58,500	17.1	10.50	9.20	6375	[5] C33-60D	RFC **0.098** / TXV **26K35**
		59,500	17.4	10.65	9.25	6420	C33-62D	RFC **0.098** / TXV **26K35**
		59,500	17.4	10.65	9.25	6420	C26-65EAP	[4] Factory Installed TXV
	Up-Flow Coils/Furnace	56,000	16.4	10.85	9.40	5970	C33-60D with G60UHV-60D-135	TXV **26K35**
		56,500	16.6	10.90	9.45	5985	C33-50/60C with G60UHV-60C-090	TXV **26K35**
		59,500	17.4	10.90	9.45	6280	C33-62D with G60UHV-60D-135	TXV **26K35**
		55,000	16.1	10.80	9.40	5860	C26-51/65 with G32V5-125	[4] Factory Installed TXV
		57,000	16.7	10.90	9.45	6030	C23-51/65 with G32V5-125	TXV **26K35**
		59,500	17.4	10.90	9.45	6280	C26-65EAP with G32V5-125	[4] Factory Installed TXV
	Down-Flow Coils	53,000	15.5	10.30	8.85	5975	CR26-48N-F	RFC **0.098** / TXV **26K35**
		54,000	15.8	10.50	8.95	6020	CR26-60N-F	RFC **0.098** / TXV **26K35**
		54,500	16.0	10.30	8.95	6095	CR26-48W-F	RFC **0.098** / TXV **26K35**
		57,000	16.7	10.50	9.10	6260	CR26-60W-F	RFC **0.098** / TXV **26K35**
	Down-Flow Coils/Furnace	54,000	15.8	10.80	9.25	5845	CR26-48N-F with GHR32V5-100	TXV **26K35**
		55,000	16.1	10.85	9.40	5865	CR26-48W-F with GHR32V5-100	TXV **26K35**
		56,500	16.6	10.90	9.45	5970	CR26-60N-F with GHR32V5-100	TXV **26K35**
		57,000	16.7	10.90	9.40	6050	CR26-60W-F with GHR32V5-100	TXV **26K35**
	Horizontal Coils	56,000	16.4	10.35	9.00	6225	CH23-65	RFC **0.098** / TXV **26K35**
		56,000	16.4	10.65	9.25	6050	CH33-50/60C-2F	RFC **0.098** / TXV **26K35**
		58,000	17.0	10.60	9.20	6295	CH33-60D-2F	RFC **0.098** / TXV **26K35**
		58,500	17.1	11.00	9.30	6305	CH33-62D-2F	RFC **0.098** / TXV **26K35**
		59,000	17.3	10.75	9.35	6325	CH23-68	RFC **0.098** / TXV **26K35**
	Horizontal Coils/Furnace	56,000	16.4	10.90	9.45	5930	CH33-50/60C-2F with G60UHV-60C-090	TXV **26K35**
		58,000	17.0	10.75	9.35	6215	CH33-60D-2F with G60UHV-60D-135	TXV **26K35**
		58,000	17.0	10.75	9.35	6215	CH33-62D-2F with G60UHV-60D-135	TXV **26K35**
		56,000	16.4	10.80	9.35	6000	CH23-65 with GHR32V5-100	TXV **26K35**
		59,000	17.3	11.15	9.65	6100	CH23-68 with GHR32V5-100	TXV **26K35**
	Blower Coil Units	54,500	16.0	10.00	8.45	6445	CB29M-51 (Multi-Position)	[4] Factory Installed TXV
		54,500	16.0	10.00	8.45	6445	CB28UH-048 (Up-Flow/Horizontal)	[4] Factory Installed TXV
		55,000	16.1	10.00	8.60	6400	CB29M-65 (Multi-Position)	[4] Factory Installed TXV
		55,000	16.1	10.00	8.60	6400	CB28UH-060 (Up-Flow/Horizontal)	[4] Factory Installed TXV
		56,000	16.4	10.80	9.35	6000	CB30M-51 (Multi-Position)	[4] Factory Installed TXV
		56,000	16.4	10.80	9.35	6000	CB30U-51 (Up-Flow)	[4] Factory Installed TXV
		57,500	16.9	10.80	9.40	6130	CB31MV-51 (Multi-Position)	[4] Factory Installed TXV
		58,000	17.0	11.20	9.35	6205	CB30M-65 (Multi-Position)	[4] Factory Installed TXV
		58,000	17.0	11.20	9.35	6205	CB30U-65 (Up-Flow)	[4] Factory Installed TXV
		58,500	17.1	10.90	9.50	6165	CB31MV-65 (Multi-Position)	[4] Factory Installed TXV

NOTE - Ratings for all C23, C26 and C33 coils include both cased and uncased coils.

1 Sound Rating Number rated in accordance with test conditions included in ARI Standard 270.

2 Certified in accordance with USE certification program which is based on ARI Standard 210/240; 95°F (35°C) outdoor air temperature, 80°F (27°C) db / 67°F (19°C) wb entering evaporator air with 25 ft. (7.6 m) of connecting refrigerant lines.

3 Kit is required and must be ordered extra, unless shown as factory installed. RFC orifice is furnished with condensing unit.

4 Furnished as standard with coil.

5 Most popular evaporator coil match with RFC orifice.

RATINGS

NOTE - For Temperatures and Capacities not shown in tables, see bulletin - Cooling Unit Rating Table Correction Factor Data in Miscellaneous Engineering Data section.

Entering Wet Bulb Temperature	Total Air Volume		Outdoor Air Temperature Entering Outdoor Coil																							
			85°F (29°C)						95°F (35°C)						105°F (41°C)						115°F (46°C)					
			Total Cooling Capacity		Comp Motor kW Input	Sensible To Total Ratio (S/T) Dry Bulb			Total Cooling Capacity		Comp Motor kW Input	Sensible To Total Ratio (S/T) Dry Bulb			Total Cooling Capacity		Comp Motor kW Input	Sensible To Total Ratio (S/T) Dry Bulb			Total Cooling Capacity		Comp Motor kW Input	Sensible To Total Ratio (S/T) Dry Bulb		
	cfm	L/s	kBtuh	kW		75°F 24°C	80°F 27°C	85°F 29°C	kBtuh	kW		75°F 24°C	80°F 27°C	85°F 29°C	kBtuh	kW		75°F 24°C	80°F 27°C	85°F 29°C	kBtuh	kW		75°F 24°C	80°F 27°C	85°F 29°C
10ACC-018 — C33-18A COOLING CAPACITY																										
63°F (17°C)	450	210	16.8	4.9	1.30	.73	.84	.95	15.9	4.7	1.39	.74	.86	.98	15.0	4.4	1.47	.76	.89	1.00	14.1	4.1	1.55	.78	.92	1.00
	650	305	18.3	5.4	1.34	.79	.93	1.00	17.3	5.1	1.43	.81	.96	1.00	16.3	4.8	1.52	.83	.99	1.00	15.3	4.5	1.61	.86	1.00	1.00
	850	400	19.3	5.7	1.36	.85	1.00	1.00	18.3	5.4	1.45	.87	1.00	1.00	17.4	5.1	1.56	.91	1.00	1.00	16.4	4.8	1.65	.94	1.00	1.00
67°F (19°C)	450	210	17.7	5.2	1.32	.59	.70	.81	16.8	4.9	1.41	.60	.72	.83	15.8	4.6	1.50	.61	.73	.85	14.9	4.4	1.59	.62	.75	.88
	650	305	19.3	5.7	1.36	.63	.77	.90	18.2	5.3	1.45	.64	.79	.93	17.2	5.0	1.55	.66	.81	.96	16.1	4.7	1.64	.67	.84	.99
	850	400	20.2	5.9	1.38	.67	.83	.97	19.1	5.6	1.48	.68	.85	.99	17.9	5.2	1.57	.70	.88	1.00	16.8	4.9	1.67	.72	.92	1.00
71°F (22°C)	450	210	18.4	5.4	1.34	.47	.58	.68	17.5	5.1	1.43	.47	.58	.69	16.6	4.9	1.53	.48	.59	.71	15.7	4.6	1.62	.48	.61	.73
	650	305	20.2	5.9	1.38	.49	.62	.74	19.1	5.6	1.48	.49	.63	.76	18.1	5.3	1.58	.50	.64	.78	17.0	5.0	1.68	.51	.66	.81
	850	400	21.2	6.2	1.39	.50	.65	.80	20.0	5.9	1.50	.51	.67	.83	18.9	5.5	1.61	.52	.69	.86	17.8	5.2	1.71	.53	.71	.89
10ACC-018 — C26-21 COOLING CAPACITY																										
63°F (17°C)	450	210	17.1	5.0	1.31	.73	.85	.96	16.2	4.7	1.39	.75	.88	.99	15.2	4.5	1.48	.77	.90	1.00	14.3	4.2	1.56	.79	.93	1.00
	650	305	18.7	5.5	1.34	.81	.95	1.00	17.7	5.2	1.44	.83	.98	1.00	16.7	4.9	1.53	.85	1.00	1.00	15.7	4.6	1.63	.88	1.00	1.00
	850	400	19.9	5.8	1.37	.88	1.00	1.00	18.9	5.5	1.47	.90	1.00	1.00	17.9	5.2	1.57	.93	1.00	1.00	16.9	5.0	1.67	.96	1.00	1.00
67°F (19°C)	450	210	18.0	5.3	1.33	.60	.71	.82	17.0	5.0	1.42	.61	.72	.84	16.1	4.7	1.51	.62	.74	.87	15.1	4.4	1.60	.63	.76	.89
	650	305	19.7	5.8	1.36	.64	.78	.92	18.6	5.5	1.46	.65	.80	.94	17.5	5.1	1.56	.67	.83	.97	16.4	4.8	1.65	.69	.86	1.00
	850	400	20.6	6.0	1.38	.68	.85	.99	19.5	5.7	1.49	.70	.88	1.00	18.3	5.4	1.59	.72	.91	1.00	17.2	5.0	1.69	.74	.94	1.00
71°F (22°C)	450	210	18.7	5.5	1.34	.47	.58	.69	17.8	5.2	1.44	.47	.59	.70	16.8	4.9	1.54	.48	.60	.72	15.8	4.6	1.63	.48	.61	.74
	650	305	20.6	6.0	1.38	.49	.63	.76	19.5	5.7	1.49	.49	.64	.78	18.4	5.4	1.59	.50	.66	.80	17.3	5.1	1.69	.51	.67	.83
	850	400	21.6	6.3	1.40	.51	.67	.83	20.4	6.0	1.51	.52	.69	.86	19.2	5.6	1.62	.53	.71	.89	18.1	5.3	1.72	.54	.73	.92
10ACC-018 — C23-26 COOLING CAPACITY																										
63°F (17°C)	450	210	17.3	5.1	1.31	.73	.84	.95	16.4	4.8	1.40	.74	.86	.97	15.4	4.5	1.49	.76	.89	1.00	14.5	4.2	1.57	.78	.92	1.00
	650	305	19.0	5.6	1.35	.79	.93	1.00	18.0	5.3	1.45	.81	.96	1.00	16.9	5.0	1.54	.84	.99	1.00	15.9	4.7	1.63	.86	1.00	1.00
	850	400	20.2	5.9	1.37	.85	1.00	1.00	19.0	5.6	1.47	.88	1.00	1.00	18.0	5.3	1.58	.91	1.00	1.00	17.1	5.0	1.68	.95	1.00	1.00
67°F (19°C)	450	210	18.2	5.3	1.33	.59	.70	.81	17.3	5.1	1.43	.60	.72	.83	16.3	4.8	1.52	.61	.73	.85	15.3	4.5	1.61	.62	.75	.88
	650	305	20.0	5.9	1.37	.63	.77	.90	18.9	5.5	1.47	.64	.79	.93	17.8	5.2	1.57	.66	.81	.96	16.7	4.9	1.66	.67	.84	.98
	850	400	21.0	6.2	1.39	.67	.83	.98	19.8	5.8	1.49	.68	.86	1.00	18.6	5.5	1.60	.70	.89	1.00	17.5	5.1	1.70	.73	.92	1.00
71°F (22°C)	450	210	19.0	5.6	1.35	.46	.57	.68	18.1	5.3	1.45	.47	.58	.69	17.1	5.0	1.54	.47	.59	.71	16.1	4.7	1.64	.48	.61	.73
	650	305	20.8	6.1	1.39	.49	.62	.74	19.8	5.8	1.49	.49	.63	.76	18.7	5.5	1.60	.50	.64	.79	17.5	5.1	1.70	.51	.66	.81
	850	400	22.0	6.4	1.41	.50	.66	.81	20.8	6.1	1.52	.51	.67	.83	19.6	5.7	1.63	.52	.69	.86	18.4	5.4	1.73	.53	.72	.90
10ACC-018 — C33-24A/B COOLING CAPACITY																										
63°F (17°C)	450	210	17.6	5.2	1.32	.72	.84	.95	16.7	4.9	1.41	.74	.86	.97	15.7	4.6	1.50	.76	.88	1.00	14.7	4.3	1.58	.78	.91	1.00
	650	305	19.4	5.7	1.36	.79	.92	1.00	18.3	5.4	1.46	.81	.95	1.00	17.3	5.1	1.55	.83	.98	1.00	16.2	4.7	1.64	.86	1.00	1.00
	850	400	20.6	6.0	1.38	.84	.99	1.00	19.4	5.7	1.49	.87	1.00	1.00	18.4	5.4	1.59	.90	1.00	1.00	17.4	5.1	1.69	.94	1.00	1.00
67°F (19°C)	450	210	18.5	5.4	1.34	.59	.70	.80	17.6	5.2	1.44	.60	.71	.82	16.6	4.9	1.53	.61	.73	.85	15.6	4.6	1.62	.62	.75	.88
	650	305	20.2	5.9	1.38	.63	.76	.89	19.2	5.6	1.48	.64	.78	.92	18.0	5.3	1.58	.65	.81	.95	16.9	5.0	1.67	.67	.84	.98
	850	400	21.4	6.3	1.40	.66	.82	.97	20.2	5.9	1.50	.68	.85	.99	19.0	5.6	1.61	.70	.88	1.00	17.8	5.2	1.71	.72	.91	1.00
71°F (22°C)	450	210	19.3	5.7	1.36	.47	.57	.67	18.3	5.4	1.46	.47	.58	.69	17.3	5.1	1.55	.47	.59	.71	16.3	4.8	1.65	.48	.60	.72
	650	305	21.2	6.2	1.39	.48	.61	.74	20.0	5.9	1.50	.49	.63	.76	18.9	5.5	1.61	.50	.64	.78	17.8	5.2	1.71	.50	.66	.81
	850	400	22.2	6.5	1.41	.50	.65	.80	21.0	6.2	1.52	.51	.67	.82	19.8	5.8	1.63	.52	.69	.85	18.6	5.5	1.74	.53	.71	.89
10ACC-018 — CR26-18N-F COOLING CAPACITY																										
63°F (17°C)	450	210	16.8	4.9	1.30	.73	.84	.95	15.9	4.7	1.39	.74	.87	.97	15.0	4.4	1.47	.76	.89	.99	14.0	4.1	1.55	.78	.92	1.00
	650	305	18.4	5.4	1.34	.79	.93	1.00	17.4	5.1	1.43	.81	.96	1.00	16.4	4.8	1.52	.84	.98	1.00	15.4	4.5	1.61	.87	1.00	1.00
	850	400	19.5	5.7	1.36	.86	.99	1.00	18.4	5.4	1.46	.88	1.00	1.00	17.4	5.1	1.56	.91	1.00	1.00	16.5	4.8	1.65	.94	1.00	1.00
67°F (19°C)	450	210	17.7	5.2	1.32	.59	.70	.81	16.8	4.9	1.41	.60	.72	.83	15.8	4.6	1.50	.61	.73	.85	14.9	4.4	1.59	.62	.75	.88
	650	305	19.3	5.7	1.36	.63	.77	.90	18.3	5.4	1.45	.65	.79	.93	17.2	5.0	1.55	.66	.81	.95	16.1	4.7	1.64	.68	.84	.98
	850	400	20.2	5.9	1.38	.67	.83	.97	19.2	5.6	1.48	.69	.86	.99	18.0	5.3	1.58	.71	.89	1.00	16.9	5.0	1.67	.73	.92	1.00
71°F (22°C)	450	210	18.5	5.4	1.34	.47	.58	.68	17.5	5.1	1.43	.47	.59	.69	16.6	4.9	1.53	.47	.60	.71	15.6	4.6	1.62	.48	.61	.73
	650	305	20.2	5.9	1.38	.49	.62	.75	19.2	5.6	1.48	.49	.63	.77	18.1	5.3	1.58	.50	.65	.79	17.0	5.0	1.68	.51	.66	.81
	850	400	21.4	6.3	1.40	.51	.66	.81	20.2	5.9	1.50	.52	.68	.84	19.0	5.6	1.61	.52	.70	.86	17.8	5.2	1.71	.53	.72	.89
10ACC-018 — CH23-21 COOLING CAPACITY																										
63°F (17°C)	450	210	16.7	4.9	1.30	.72	.82	.93	15.8	4.6	1.38	.73	.84	.95	14.9	4.4	1.47	.75	.87	.98	14.0	4.1	1.55	.77	.89	1.00
	650	305	18.4	5.4	1.34	.77	.90	1.00	17.5	5.1	1.43	.79	.93	1.00	16.4	4.8	1.52	.81	.96	1.00	15.5	4.5	1.62	.84	.99	1.00
	850	400	19.5	5.7	1.36	.82	.97	1.00	18.6	5.5	1.46	.84	.99	1.00	17.7	5.2	1.57	.87	1.00	1.00	16.8	4.9	1.67	.91	1.00	1.00
67°F (19°C)	450	210	17.8	5.2	1.32	.59	.69	.79	16.9	5.0	1.42	.59	.71	.81	16.0	4.7	1.51	.60	.72	.83	15.0	4.4	1.59	.61	.74	.86
	650	305	19.6	5.7	1.36	.62	.75	.87	18.5	5.4	1.46	.63	.76	.89	17.5	5.1	1.56	.64	.79	.92	16.3	4.8	1.65	.66	.81	.96
	850	400	20.6	6.0	1.38	.65	.80	.94	19.3	5.7	1.48	.66	.82	.97	18.2	5.3	1.58	.68	.85	.99	17.1	5.0	1.68	.70	.88	1.00
71°F (22°C)	450	210	18.8	5.5	1.34	.45	.57	.67	17.8	5.2	1.44	.47	.58	.68	16.9	5.0	1.54	.47	.58	.70	15.9	4.7	1.63	.48	.60	.71
	650	305	20.6	6.0	1.38	.48	.61	.72	19.5	5.7	1.49	.49	.62	.74	18.4	5.4	1.59	.49	.63	.76	17.3	5.1	1.69	.49	.65	.79
	850	400	21.6	6.3	1.40	.50	.64	.78	20.6	6.0	1.51	.51	.65	.80	19.3	5.7	1.62	.51	.67	.82	18.1	5.3	1.72	.52	.69	.86
10ACC-018 — CH33-24/30A-2F COOLING CAPACITY																										
63°F (17°C)	450	210	17.8	5.2	1.32	.73	.84	.95	16.9	5.0	1.41	.74	.86	.97	15.9	4.7	1.50	.76	.89	1.00	14.9	4.4	1.59	.78	.91	1.00
	650	305	19.6	5.7	1.36	.79	.93	1.00	18.5	5.4	1.46	.81	.96	1.00	17.4	5.1	1.56	.84	.99	1.00	16.4	4.8	1.65	.87	1.00	1.00
	850	400	20.8	6.1	1.39	.85	1.00	1.00	19.7	5.8	1.49	.88	1.00	1.00	18.6	5.5	1.60	.91	1.00	1.00	17.6	5.2	1.70	.94	1.00	1.00
67°F (19°C)	450	210	18.7	5.5	1.34	.59	.70	.80	17.7	5.2	1.44	.60	.71	.82	16.7	4.9	1.53	.61	.73	.85	15.7	4.6	1.62	.62	.75	.88
	650	305	20.4	6.0	1.38	.63	.77	.90	19.3	5.7	1.48	.64	.79	.92	18.2	5.3	1.58	.66	.81	.96	17.1	5.0	1.68	.67	.84	.99
	850	400	21.6	6.3	1.40	.67	.83	.98	20.4	6.0	1.51	.68	.85	1.00	19.2	5.6	1.61	.70	.88	1.00	18.0	5.3	1.71	.73	.92	1.00
71°F (22°C)	450	210	19.5	5.7	1.36	.47	.57	.68	18.5	5.4	1.46	.47	.58	.69	17.5	5.1	1.56	.47	.59	.71	16.5	4.8	1.66	.48	.61	.72
	650	305	21.4	6.3	1.40	.48	.62	.74	20.2	5.9	1.51	.49	.63	.76	19.1	5.6	1.61	.50	.64	.79	17.9	5.2	1.71	.51	.66	.81
	850	400	22.4	6.6	1.42	.50	.66	.81	21.2	6.2	1.53	.51	.67	.83	20.0	5.9	1.64	.52	.69	.86	18.8	5.5	1.75	.53	.71	.89

RATINGS

NOTE - For Temperatures and Capacities not shown in tables, see bulletin - Cooling Unit Rating Table Correction Factor Data in Miscellaneous Engineering Data section.

Entering Wet Bulb Temperature	Total Air Volume		Outdoor Air Temperature Entering Outdoor Coil																							
			85°F (29°C)						95°F (35°C)						105°F (41°C)						115°F (46°C)					
			Total Cooling Capacity		Comp Motor kW Input	Sensible To Total Ratio (S/T) Dry Bulb			Total Cooling Capacity		Comp Motor kW Input	Sensible To Total Ratio (S/T) Dry Bulb			Total Cooling Capacity		Comp Motor kW Input	Sensible To Total Ratio (S/T) Dry Bulb			Total Cooling Capacity		Comp Motor kW Input	Sensible To Total Ratio (S/T) Dry Bulb		
	cfm	L/s	kBtuh	kW		75°F 24°C	80°F 27°C	85°F 29°C	kBtuh	kW		75°F 24°C	80°F 27°C	85°F 29°C	kBtuh	kW		75°F 24°C	80°F 27°C	85°F 29°C	kBtuh	kW		75°F 24°C	80°F 27°C	85°F 29°C
10ACC-018 — CB29M-21/26 - CB28UH-018/024 COOLING CAPACITY																										
63°F (17°C)	450	210	17.0	5.0	1.30	.73	.85	.96	16.1	4.7	1.39	.75	.87	.98	15.1	4.4	1.47	.77	.90	1.00	14.2	4.2	1.56	.79	.93	1.00
	650	305	18.6	5.5	1.34	.80	.94	1.00	17.6	5.2	1.44	.82	.97	1.00	16.6	4.9	1.53	.85	.99	1.00	15.6	4.6	1.62	.88	1.00	1.00
	850	400	19.7	5.8	1.37	.87	1.00	1.00	18.7	5.5	1.47	.90	1.00	1.00	17.7	5.2	1.57	.92	1.00	1.00	16.8	4.9	1.67	.96	1.00	1.00
67°F (19°C)	450	210	17.9	5.2	1.33	.60	.71	.82	17.0	5.0	1.42	.60	.72	.84	16.0	4.7	1.51	.61	.74	.86	15.0	4.4	1.59	.63	.76	.89
	650	305	19.5	5.7	1.36	.64	.78	.91	18.5	5.4	1.46	.65	.80	.94	17.4	5.1	1.56	.66	.82	.97	16.3	4.8	1.65	.68	.85	.99
	850	400	20.6	6.0	1.38	.68	.85	.99	19.4	5.7	1.48	.70	.87	1.00	18.2	5.3	1.58	.72	.90	1.00	17.1	5.0	1.68	.74	.93	1.00
71°F (22°C)	450	210	18.7	5.5	1.34	.47	.58	.68	17.7	5.2	1.44	.47	.59	.70	16.8	4.9	1.53	.48	.60	.71	15.8	4.6	1.63	.48	.61	.74
	650	305	20.4	6.0	1.38	.49	.62	.75	19.4	5.7	1.48	.49	.64	.77	18.3	5.4	1.58	.50	.65	.80	17.2	5.0	1.68	.51	.67	.83
	850	400	21.6	6.3	1.40	.51	.67	.83	20.4	6.0	1.51	.52	.69	.85	19.2	5.6	1.61	.53	.71	.88	18.0	5.3	1.72	.54	.73	.91
10ACC-018 — CB30M-21/26 - CB30U-21/26 COOLING CAPACITY																										
63°F (17°C)	450	210	18.3	5.4	1.33	.72	.84	.95	17.3	5.1	1.43	.74	.86	.98	16.2	4.7	1.51	.75	.89	1.00	15.2	4.5	1.60	.78	.92	1.00
	650	305	20.0	5.9	1.37	.80	.95	1.00	19.0	5.6	1.47	.82	.97	1.00	17.8	5.2	1.57	.85	1.00	1.00	16.7	4.9	1.67	.88	1.00	1.00
	850	400	21.2	6.2	1.40	.87	1.00	1.00	20.2	5.9	1.50	.89	1.00	1.00	19.1	5.6	1.61	.93	1.00	1.00	18.0	5.3	1.71	.96	1.00	1.00
67°F (19°C)	450	210	19.4	5.7	1.36	.58	.70	.80	18.4	5.4	1.46	.60	.71	.82	17.3	5.1	1.55	.60	.73	.85	16.2	4.7	1.65	.61	.75	.88
	650	305	21.2	6.2	1.39	.63	.78	.91	20.0	5.9	1.50	.65	.80	.94	18.8	5.5	1.60	.66	.82	.97	17.6	5.2	1.70	.68	.85	.99
	850	400	22.2	6.5	1.41	.67	.84	.99	21.0	6.2	1.52	.69	.87	1.00	19.6	5.7	1.63	.71	.90	1.00	18.4	5.4	1.73	.74	.94	1.00
71°F (22°C)	450	210	20.4	6.0	1.38	.46	.57	.67	19.4	5.7	1.49	.46	.58	.69	18.3	5.4	1.59	.47	.58	.70	17.2	5.0	1.69	.47	.60	.72
	650	305	22.4	6.6	1.41	.48	.62	.75	21.0	6.2	1.53	.49	.63	.77	19.8	5.8	1.63	.50	.65	.80	18.6	5.5	1.74	.50	.67	.82
	850	400	23.2	6.8	1.43	.50	.66	.82	22.0	6.4	1.54	.51	.68	.85	20.6	6.0	1.66	.52	.70	.87	19.4	5.7	1.76	.53	.72	.91
10ACC-024 — C23-26 COOLING CAPACITY																										
63°F (17°C)	600	285	22.3	6.5	1.82	.70	.83	.95	21.1	6.2	1.95	.72	.86	.97	19.9	5.8	2.08	.73	.88	.99	18.8	5.5	2.19	.76	.90	1.00
	800	380	23.5	6.9	1.86	.76	.91	1.00	22.2	6.5	2.00	.79	.94	1.00	21.0	6.2	2.13	.81	.96	1.00	19.8	5.8	2.25	.84	.98	1.00
	1000	470	24.4	7.2	1.90	.82	.97	1.00	23.1	6.8	2.04	.85	.99	1.00	21.9	6.4	2.18	.87	1.00	1.00	20.8	6.1	2.31	.90	1.00	1.00
67°F (19°C)	600	285	23.9	7.0	1.88	.56	.68	.80	22.6	6.6	2.02	.57	.69	.82	21.3	6.2	2.15	.57	.71	.85	20.0	5.9	2.26	.59	.73	.87
	800	380	24.9	7.3	1.92	.59	.74	.88	23.6	6.9	2.06	.60	.76	.91	22.2	6.5	2.19	.62	.78	.93	20.8	6.1	2.31	.63	.81	.96
	1000	470	25.6	7.5	1.94	.63	.80	.95	24.2	7.1	2.09	.64	.83	.97	22.8	6.7	2.22	.66	.85	.99	21.4	6.3	2.34	.68	.88	1.00
71°F (22°C)	600	285	25.5	7.5	1.94	.42	.54	.65	24.2	7.1	2.09	.43	.55	.67	22.9	6.7	2.23	.43	.55	.68	21.5	6.3	2.35	.43	.57	.70
	800	380	26.6	7.8	1.98	.43	.58	.71	25.2	7.4	2.13	.44	.59	.73	23.7	6.9	2.27	.44	.60	.76	22.3	6.5	2.39	.45	.62	.78
	1000	470	27.2	8.0	2.00	.45	.61	.78	25.7	7.5	2.15	.46	.63	.80	24.3	7.1	2.29	.46	.65	.83	22.8	6.7	2.42	.47	.67	.86
10ACC-024 — C23-31 - C26-26 COOLING CAPACITY																										
63°F (17°C)	600	285	22.6	6.6	1.83	.70	.83	.94	21.5	6.3	1.97	.71	.85	.96	20.2	5.9	2.09	.74	.87	.99	19.0	5.6	2.20	.75	.90	1.00
	800	380	23.8	7.0	1.88	.76	.91	1.00	22.6	6.6	2.02	.78	.93	1.00	21.3	6.2	2.15	.80	.95	1.00	20.0	5.9	2.27	.83	.98	1.00
	1000	470	24.7	7.2	1.91	.82	.97	1.00	23.5	6.9	2.06	.84	.99	1.00	22.2	6.5	2.19	.87	1.00	1.00	21.0	6.2	2.32	.89	1.00	1.00
67°F (19°C)	600	285	24.3	7.1	1.89	.56	.67	.79	23.0	6.7	2.04	.56	.69	.81	21.7	6.4	2.17	.57	.71	.84	20.3	5.9	2.28	.58	.72	.86
	800	380	25.3	7.4	1.93	.59	.74	.87	24.0	7.0	2.08	.60	.75	.90	22.6	6.6	2.21	.61	.77	.93	21.2	6.2	2.33	.63	.80	.95
	1000	470	26.0	7.6	1.96	.62	.80	.94	24.6	7.2	2.11	.63	.82	.96	23.2	6.8	2.24	.65	.84	.98	21.7	6.4	2.36	.67	.88	1.00
71°F (22°C)	600	285	26.0	7.6	1.96	.42	.53	.65	24.6	7.2	2.11	.43	.54	.66	23.2	6.8	2.25	.43	.55	.68	21.9	6.4	2.37	.43	.56	.69
	800	380	27.1	7.9	2.00	.43	.57	.71	25.6	7.5	2.15	.44	.58	.73	24.1	7.1	2.29	.44	.60	.75	22.7	6.7	2.41	.44	.61	.78
	1000	470	27.7	8.1	2.02	.45	.61	.77	26.2	7.7	2.18	.45	.63	.79	24.7	7.2	2.32	.46	.64	.82	23.2	6.8	2.44	.47	.66	.85
10ACC-024 — C33-24A/B COOLING CAPACITY																										
63°F (17°C)	575	270	22.9	6.7	1.83	.71	.83	.94	21.7	6.4	1.97	.72	.85	.96	20.5	6.0	2.09	.73	.87	.99	19.2	5.6	2.20	.75	.90	1.00
	775	365	24.1	7.1	1.88	.77	.91	1.00	22.8	6.7	2.02	.78	.93	1.00	21.6	6.3	2.15	.80	.96	1.00	20.3	5.9	2.27	.83	.98	1.00
	975	460	25.0	7.3	1.91	.83	.97	1.00	23.8	7.0	2.06	.85	.99	1.00	22.5	6.6	2.20	.87	1.00	1.00	21.3	6.2	2.32	.90	1.00	1.00
67°F (19°C)	575	270	24.5	7.2	1.89	.56	.67	.80	23.2	6.8	2.03	.56	.69	.81	21.9	6.4	2.16	.57	.70	.84	20.5	6.0	2.28	.59	.73	.86
	775	365	25.5	7.5	1.93	.59	.74	.88	24.2	7.1	2.08	.60	.76	.90	22.8	6.7	2.21	.61	.78	.93	21.4	6.3	2.33	.63	.81	.96
	975	460	26.3	7.7	1.96	.63	.80	.95	24.8	7.3	2.10	.64	.83	.97	23.4	6.9	2.24	.66	.85	.99	22.0	6.4	2.36	.68	.88	1.00
71°F (22°C)	575	270	26.2	7.7	1.95	.42	.53	.65	24.8	7.3	2.10	.42	.54	.66	23.5	6.9	2.24	.43	.55	.68	22.1	6.5	2.36	.43	.57	.70
	775	365	27.3	8.0	1.99	.43	.58	.71	25.8	7.6	2.14	.44	.59	.74	24.4	7.2	2.28	.44	.60	.75	22.9	6.7	2.41	.45	.62	.78
	975	460	27.9	8.2	2.02	.45	.62	.78	26.4	7.7	2.17	.45	.63	.80	24.9	7.3	2.31	.46	.65	.83	23.4	6.9	2.43	.47	.67	.86
10ACC-024 — C33-30A/B COOLING CAPACITY																										
63°F (17°C)	600	285	23.3	6.8	1.86	.71	.84	.95	22.0	6.4	2.00	.72	.86	.97	20.8	6.1	2.12	.74	.88	.99	19.5	5.7	2.24	.76	.91	1.00
	800	380	24.5	7.2	1.91	.77	.92	1.00	23.2	6.8	2.05	.79	.94	1.00	21.9	6.4	2.18	.81	.96	1.00	20.6	6.0	2.30	.84	.99	1.00
	1000	470	25.5	7.5	1.94	.83	.98	1.00	24.2	7.1	2.09	.85	1.00	1.00	22.9	6.7	2.23	.88	1.00	1.00	21.7	6.4	2.36	.91	1.00	1.00
67°F (19°C)	600	285	24.9	7.3	1.92	.56	.68	.80	23.6	6.9	2.06	.56	.69	.82	22.2	6.5	2.20	.58	.71	.84	20.9	6.1	2.31	.58	.73	.87
	800	380	26.0	7.6	1.96	.59	.74	.89	24.6	7.2	2.11	.61	.76	.91	23.2	6.8	2.24	.62	.78	.94	21.7	6.4	2.36	.63	.82	.96
	1000	470	26.8	7.9	1.99	.63	.81	.95	25.3	7.4	2.14	.64	.83	.98	23.8	7.0	2.27	.66	.86	1.00	22.3	6.5	2.39	.68	.89	1.00
71°F (22°C)	600	285	26.7	7.8	1.98	.42	.54	.65	25.3	7.4	2.14	.42	.55	.67	23.8	7.0	2.28	.43	.56	.68	22.4	6.6	2.40	.43	.57	.71
	800	380	27.8	8.1	2.02	.44	.58	.72	26.3	7.7	2.18	.44	.59	.74	24.8	7.3	2.32	.44	.60	.76	23.2	6.8	2.44	.45	.62	.79
	1000	470	28.5	8.4	2.05	.45	.62	.78	26.9	7.9	2.20	.45	.63	.81	25.3	7.4	2.35	.46	.65	.83	23.7	6.9	2.47	.47	.68	.86
10ACC-024 — C33-36A/B/C COOLING CAPACITY																										
63°F (17°C)	600	285	23.6	6.9	1.87	.71	.83	.95	22.3	6.5	2.00	.72	.85	.97	21.0	6.2	2.13	.74	.88	.99	19.7	5.8	2.24	.76	.90	1.00
	800	380	24.9	7.3	1.92	.77	.92	1.00	23.5	6.9	2.06	.79	.94	1.00	22.2	6.5	2.19	.81	.96	1.00	20.8	6.1	2.31	.83	.99	1.00
	1000	470	25.9	7.6	1.95	.83	.98	1.00	24.5	7.2	2.10	.85	1.00	1.00	23.3	6.8	2.24	.88	1.00	1.00	22.0	6.4	2.37	.91	1.00	1.00
67°F (19°C)	600	285	25.3	7.4	1.93	.55	.68	.79	23.9	7.0	2.07	.56	.69	.82	22.5	6.6	2.21	.57	.71	.84	21.1	6.2	2.32	.58	.73	.87
	800	380	26.4	7.7	1.97	.59	.74	.88	25.0	7.3	2.12	.60	.76	.90	23.5	6.9	2.25	.62	.78	.94	22.0	6.4	2.37	.63	.81	.96
	1000	470	27.2	8.0	2.00	.63	.81	.95	25.7	7.5	2.15	.64	.83	.98	24.1	7.1	2.29	.66	.86	1.00	22.6	6.6	2.41	.68	.88	1.00
71°F (22°C)	600	285	27.1	7.9	1.99	.42	.54	.65	25.6	7.5	2.15	.43	.54	.66	24.2	7.1	2.29	.43	.55	.68	22.7	6.7	2.41	.43	.57	.70
	800	380	28.2	8.3	2.04	.44	.57	.71	26.7	7.8	2.19	.44	.59	.74	25.1	7.4	2.33	.44	.60	.76	23.5	6.9	2.46	.45	.62	.78
	1000	470	29.0	8.5	2.06	.45	.61	.78	27.4	8.0	2.22	.45	.63	.81	25.7	7.5	2.36	.46	.65	.83	24.1	7.1	2.48	.47	.67	.86

RATINGS

NOTE - For Temperatures and Capacities not shown in tables, see bulletin - Cooling Unit Rating Table Correction Factor Data in Miscellaneous Engineering Data section.

Entering Wet Bulb Temperature	Total Air Volume		Outdoor Air Temperature Entering Outdoor Coil																							
			85°F (29°C)						95°F (35°C)						105°F (41°C)						115°F (46°C)					
			Total Cooling Capacity		Comp Motor kW Input	Sensible To Total Ratio (S/T) Dry Bulb			Total Cooling Capacity		Comp Motor kW Input	Sensible To Total Ratio (S/T) Dry Bulb			Total Cooling Capacity		Comp Motor kW Input	Sensible To Total Ratio (S/T) Dry Bulb			Total Cooling Capacity		Comp Motor kW Input	Sensible To Total Ratio (S/T) Dry Bulb		
	cfm	L/s	kBtuh	kW		75°F 24°C	80°F 27°C	85°F 29°C	kBtuh	kW		75°F 24°C	80°F 27°C	85°F 29°C	kBtuh	kW		75°F 24°C	80°F 27°C	85°F 29°C	kBtuh	kW		75°F 24°C	80°F 27°C	85°F 29°C
10ACC-024 — C26-31 COOLING CAPACITY																										
63°F (17°C)	600	285	23.7	6.9	1.87	.70	.83	.95	22.4	6.6	2.01	.71	.85	.97	21.1	6.2	2.13	.73	.87	.99	19.8	5.8	2.24	.75	.90	1.00
	800	380	25.0	7.3	1.92	.76	.91	1.00	23.6	6.9	2.06	.78	.94	1.00	22.3	6.5	2.19	.80	.96	1.00	20.9	6.1	2.31	.83	.99	1.00
	1000	470	26.1	7.6	1.95	.82	.98	1.00	24.7	7.2	2.11	.85	1.00	1.00	23.4	6.9	2.25	.87	1.00	1.00	22.1	6.5	2.37	.91	1.00	1.00
67°F (19°C)	600	285	25.4	7.4	1.93	.56	.67	.79	24.0	7.0	2.08	.56	.69	.81	22.6	6.6	2.21	.57	.70	.83	21.2	6.2	2.33	.58	.73	.86
	800	380	26.7	7.8	1.98	.59	.73	.88	25.2	7.4	2.13	.60	.75	.91	23.7	6.9	2.26	.61	.78	.93	22.1	6.5	2.38	.63	.81	.96
	1000	470	27.5	8.1	2.01	.62	.80	.95	25.9	7.6	2.16	.64	.82	.98	24.3	7.1	2.29	.66	.85	1.00	22.8	6.7	2.41	.68	.88	1.00
71°F (22°C)	600	285	27.3	8.0	2.00	.42	.53	.64	25.8	7.6	2.15	.43	.54	.66	24.3	7.1	2.29	.43	.55	.67	22.8	6.7	2.41	.43	.57	.70
	800	380	28.5	8.4	2.04	.43	.57	.71	27.0	7.9	2.20	.44	.58	.73	25.3	7.4	2.34	.44	.60	.75	23.7	6.9	2.46	.45	.62	.78
	1000	470	29.3	8.6	2.07	.45	.61	.78	27.6	8.1	2.23	.45	.63	.80	26.0	7.6	2.37	.46	.65	.83	24.3	7.1	2.49	.47	.67	.86
10ACC-024 — C33-24A WITH G60UHV-36A-070 COOLING CAPACITY																										
63°F (17°C)	860	405	24.5	7.2	1.90	.79	.94	1.00	23.2	6.8	2.05	.81	.96	1.00	22.0	6.4	2.18	.84	.98	1.00	20.7	6.1	2.30	.86	1.00	1.00
	1000	470	25.1	7.4	1.93	.83	.98	1.00	23.9	7.0	2.07	.85	.99	1.00	22.7	6.7	2.21	.88	1.00	1.00	21.5	6.3	2.34	.91	1.00	1.00
67°F (19°C)	860	405	25.9	7.6	1.95	.61	.76	.91	24.5	7.2	2.10	.62	.79	.93	23.1	6.8	2.23	.63	.81	.96	21.7	6.4	2.35	.65	.84	.98
	1000	470	26.3	7.7	1.97	.63	.81	.96	24.9	7.3	2.12	.65	.83	.98	23.5	6.9	2.25	.66	.86	.99	22.0	6.4	2.37	.68	.89	1.00
71°F (22°C)	860	405	27.6	8.1	2.01	.44	.59	.74	26.1	7.6	2.17	.44	.61	.76	24.6	7.2	2.31	.45	.62	.79	23.1	6.8	2.43	.46	.64	.81
	1000	470	28.0	8.2	2.03	.45	.62	.79	26.5	7.8	2.18	.46	.63	.81	25.0	7.3	2.32	.46	.65	.84	23.4	6.9	2.45	.47	.68	.86
10ACC-024 — C33-24B WITH G60UHV-36B-090 COOLING CAPACITY																										
63°F (17°C)	845	400	24.3	7.1	1.89	.78	.93	1.00	23.1	6.8	2.03	.81	.96	1.00	21.8	6.4	2.16	.83	.98	1.00	20.6	6.0	2.29	.86	1.00	1.00
	1040	490	25.2	7.4	1.92	.84	.99	1.00	24.0	7.0	2.07	.87	1.00	1.00	22.8	6.7	2.21	.89	1.00	1.00	21.5	6.3	2.34	.92	1.00	1.00
67°F (19°C)	845	400	25.7	7.5	1.94	.60	.76	.91	24.3	7.1	2.09	.61	.78	.93	22.9	6.7	2.22	.63	.81	.95	21.5	6.3	2.34	.65	.83	.98
	1040	490	26.3	7.7	1.96	.64	.82	.96	24.9	7.3	2.11	.65	.84	.99	23.5	6.9	2.25	.67	.87	1.00	22.0	6.4	2.37	.69	.90	1.00
71°F (22°C)	845	400	27.4	8.0	2.00	.44	.59	.74	25.9	7.6	2.15	.44	.60	.76	24.5	7.2	2.30	.45	.62	.78	23.0	6.7	2.42	.46	.63	.81
	1040	490	28.0	8.2	2.02	.45	.63	.80	26.5	7.8	2.18	.46	.64	.82	24.9	7.3	2.32	.47	.66	.85	23.4	6.9	2.44	.47	.68	.88
10ACC-024 — C33-30A WITH G60UHV-36A-070 COOLING CAPACITY																										
63°F (17°C)	860	405	25.0	7.3	1.91	.79	.94	1.00	23.6	6.9	2.05	.81	.96	1.00	22.3	6.5	2.19	.83	.98	1.00	21.0	6.2	2.31	.86	1.00	1.00
	1000	470	25.6	7.5	1.93	.83	.98	1.00	24.3	7.1	2.08	.85	1.00	1.00	23.0	6.7	2.22	.88	1.00	1.00	21.8	6.4	2.35	.91	1.00	1.00
67°F (19°C)	860	405	26.4	7.7	1.96	.60	.76	.91	24.9	7.3	2.11	.61	.78	.93	23.5	6.9	2.24	.63	.81	.96	22.0	6.4	2.36	.65	.84	.99
	1000	470	26.9	7.9	1.98	.63	.81	.95	25.4	7.4	2.13	.64	.83	.98	23.9	7.0	2.26	.66	.86	1.00	22.4	6.6	2.38	.68	.88	1.00
71°F (22°C)	860	405	28.1	8.2	2.02	.44	.59	.74	26.6	7.8	2.18	.44	.60	.76	25.0	7.3	2.32	.45	.62	.78	23.5	6.9	2.44	.46	.64	.81
	1000	470	28.6	8.4	2.04	.45	.62	.78	27.0	7.9	2.19	.46	.63	.81	25.4	7.4	2.34	.46	.65	.84	23.8	7.0	2.46	.47	.67	.86
10ACC-024 — C33-30B WITH G60UHV-36B-090 COOLING CAPACITY																										
63°F (17°C)	845	400	24.7	7.2	1.90	.78	.93	1.00	23.4	6.9	2.05	.80	.95	1.00	22.0	6.4	2.18	.82	.98	1.00	20.8	6.1	2.30	.85	1.00	1.00
	1040	490	25.6	7.5	1.94	.84	.99	1.00	24.3	7.1	2.09	.86	1.00	1.00	23.1	6.8	2.23	.89	1.00	1.00	21.8	6.4	2.36	.92	1.00	1.00
67°F (19°C)	845	400	26.1	7.6	1.96	.60	.76	.90	24.7	7.2	2.11	.61	.78	.92	23.2	6.8	2.24	.63	.81	.95	21.8	6.4	2.36	.65	.83	.98
	1040	490	26.8	7.9	1.98	.64	.82	.97	25.3	7.4	2.13	.65	.84	.99	23.8	7.0	2.27	.67	.87	1.00	22.3	6.5	2.39	.69	.90	1.00
71°F (22°C)	845	400	27.8	8.1	2.02	.44	.59	.73	26.3	7.7	2.18	.44	.60	.75	24.8	7.3	2.32	.45	.61	.78	23.3	6.8	2.44	.45	.63	.81
	1040	490	28.5	8.4	2.04	.45	.62	.80	26.9	7.9	2.20	.46	.64	.82	25.3	7.4	2.34	.47	.66	.85	23.7	6.9	2.46	.48	.68	.88
10ACC-024 — C33-36A WITH G60UHV-36A-070 COOLING CAPACITY																										
63°F (17°C)	860	405	25.1	7.4	1.93	.79	.94	1.00	23.7	6.9	2.07	.81	.96	1.00	22.4	6.6	2.21	.83	.99	1.00	21.1	6.2	2.33	.86	1.00	1.00
	1000	470	25.8	7.6	1.95	.83	.98	1.00	24.4	7.2	2.10	.85	1.00	1.00	23.2	6.8	2.24	.88	1.00	1.00	21.9	6.4	2.37	.91	1.00	1.00
67°F (19°C)	860	405	26.6	7.8	1.98	.60	.76	.91	25.1	7.4	2.13	.61	.78	.93	23.6	6.9	2.27	.63	.81	.96	22.1	6.5	2.38	.65	.84	.99
	1000	470	27.1	7.9	2.00	.63	.80	.95	25.6	7.5	2.15	.64	.83	.98	24.0	7.0	2.29	.66	.86	1.00	22.5	6.6	2.41	.68	.89	1.00
71°F (22°C)	860	405	28.4	8.3	2.05	.44	.59	.74	26.8	7.9	2.20	.44	.60	.75	25.2	7.4	2.34	.45	.62	.78	23.6	6.9	2.47	.46	.64	.81
	1000	470	28.9	8.5	2.06	.45	.62	.78	27.3	8.0	2.22	.45	.63	.81	25.6	7.5	2.36	.46	.65	.83	24.0	7.0	2.48	.47	.67	.86
10ACC-024 — C33-36B WITH G60UHV-36B-090 - CH33-36B-2F WITH G60UHV-36B-090 COOLING CAPACITY																										
63°F (17°C)	845	400	24.8	7.3	1.92	.78	.93	1.00	23.5	6.9	2.06	.80	.96	1.00	22.1	6.5	2.19	.83	.98	1.00	20.8	6.1	2.31	.85	1.00	1.00
	1040	490	25.8	7.6	1.95	.84	.99	1.00	24.5	7.2	2.10	.87	1.00	1.00	23.2	6.8	2.24	.89	1.00	1.00	21.9	6.4	2.37	.92	1.00	1.00
67°F (19°C)	845	400	26.3	7.7	1.97	.60	.76	.90	24.9	7.3	2.12	.61	.78	.92	23.4	6.9	2.25	.63	.80	.95	21.9	6.4	2.37	.64	.83	.98
	1040	490	27.0	7.9	1.99	.64	.81	.97	25.5	7.5	2.15	.65	.84	.99	23.9	7.0	2.28	.67	.87	1.00	22.4	6.6	2.40	.69	.90	1.00
71°F (22°C)	845	400	28.1	8.2	2.03	.44	.58	.73	26.6	7.8	2.19	.44	.60	.75	25.0	7.3	2.33	.45	.61	.78	23.4	6.9	2.45	.45	.63	.80
	1040	490	28.7	8.4	2.06	.45	.62	.80	27.1	7.9	2.21	.46	.64	.82	25.5	7.5	2.36	.47	.66	.85	23.9	7.0	2.48	.47	.68	.88
10ACC-024 — C26-21 WITH G32V3-75 COOLING CAPACITY																										
63°F (17°C)	800	380	22.5	6.6	1.83	.77	.92	1.00	21.3	6.2	1.97	.79	.94	1.00	20.2	5.9	2.09	.81	.96	1.00	19.0	5.6	2.21	.84	.98	1.00
	900	425	23.0	6.7	1.85	.80	.95	1.00	21.8	6.4	1.98	.82	.97	1.00	20.6	6.0	2.12	.85	.99	1.00	19.5	5.7	2.23	.87	1.00	1.00
	1000	470	23.4	6.9	1.86	.83	.98	1.00	22.2	6.5	2.00	.85	1.00	1.00	21.1	6.2	2.14	.88	1.00	1.00	19.9	5.8	2.26	.91	1.00	1.00
67°F (19°C)	800	380	23.8	7.0	1.88	.59	.75	.89	22.5	6.6	2.02	.60	.77	.91	21.3	6.2	2.15	.62	.79	.94	19.9	5.8	2.26	.63	.82	.96
	900	425	24.2	7.1	1.89	.61	.78	.93	22.9	6.7	2.03	.63	.80	.95	21.6	6.3	2.17	.64	.82	.97	20.2	5.9	2.28	.66	.85	1.00
	1000	470	24.5	7.2	1.90	.63	.81	.95	23.2	6.8	2.05	.65	.83	.98	21.8	6.4	2.18	.66	.86	.99	20.5	6.0	2.29	.68	.89	1.00
71°F (22°C)	800	380	25.4	7.4	1.94	.44	.58	.72	24.1	7.1	2.09	.44	.59	.74	22.7	6.7	2.22	.44	.60	.77	21.3	6.2	2.34	.45	.62	.79
	900	425	25.8	7.6	1.95	.44	.60	.76	24.4	7.2	2.10	.45	.61	.78	23.0	6.7	2.24	.45	.63	.80	21.6	6.3	2.36	.46	.65	.83
	1000	470	26.1	7.6	1.96	.45	.62	.79	24.6	7.2	2.11	.46	.63	.81	23.2	6.8	2.25	.46	.66	.84	21.8	6.4	2.37	.47	.67	.87

RATINGS

NOTE - For Temperatures and Capacities not shown in tables, see bulletin - Cooling Unit Rating Table Correction Factor Data in Miscellaneous Engineering Data section.

Entering Wet Bulb Temperature	Total Air Volume		Outdoor Air Temperature Entering Outdoor Coil																							
			85°F (29°C)						95°F (35°C)						105°F (41°C)						115°F (46°C)					
			Total Cooling Capacity		Comp Motor kW Input	Sensible To Total Ratio (S/T) Dry Bulb			Total Cooling Capacity		Comp Motor kW Input	Sensible To Total Ratio (S/T) Dry Bulb			Total Cooling Capacity		Comp Motor kW Input	Sensible To Total Ratio (S/T) Dry Bulb			Total Cooling Capacity		Comp Motor kW Input	Sensible To Total Ratio (S/T) Dry Bulb		
	cfm	L/s	kBtuh	kW		75°F 24°C	80°F 27°C	85°F 29°C	kBtuh	kW		75°F 24°C	80°F 27°C	85°F 29°C	kBtuh	kW		75°F 24°C	80°F 27°C	85°F 29°C	kBtuh	kW		75°F 24°C	80°F 27°C	85°F 29°C
10ACC-024 — C23-26 WITH G32V3-75 COOLING CAPACITY																										
63°F (17°C)	800	380	23.2	6.8	1.86	.77	.91	1.00	22.0	6.4	2.00	.79	.94	1.00	20.8	6.1	2.12	.80	.96	1.00	19.6	5.7	2.24	.83	.98	1.00
	900	425	23.6	6.9	1.88	.79	.95	1.00	22.4	6.6	2.02	.81	.97	1.00	21.2	6.2	2.15	.84	.99	1.00	20.1	5.9	2.27	.87	1.00	1.00
	1000	470	24.1	7.1	1.89	.82	.97	1.00	22.9	6.7	2.03	.85	.99	1.00	21.7	6.4	2.17	.88	1.00	1.00	20.5	6.0	2.30	.90	1.00	1.00
67°F (19°C)	800	380	24.6	7.2	1.91	.59	.74	.88	23.3	6.8	2.05	.60	.76	.91	21.9	6.4	2.18	.62	.79	.93	20.6	6.0	2.30	.63	.81	.96
	900	425	25.0	7.3	1.92	.61	.77	.92	23.6	6.9	2.07	.62	.79	.94	22.3	6.5	2.20	.64	.82	.96	20.9	6.1	2.32	.65	.85	.99
	1000	470	25.3	7.4	1.93	.62	.80	.95	23.9	7.0	2.08	.64	.82	.97	22.5	6.6	2.21	.66	.85	.99	21.2	6.2	2.33	.68	.88	1.00
71°F (22°C)	800	380	26.3	7.7	1.97	.43	.57	.71	24.9	7.3	2.12	.44	.59	.73	23.5	6.9	2.26	.44	.60	.76	22.0	6.4	2.38	.45	.62	.78
	900	425	26.6	7.8	1.98	.44	.59	.75	25.2	7.4	2.13	.44	.61	.77	23.8	7.0	2.27	.45	.62	.79	22.3	6.5	2.40	.46	.64	.82
	1000	470	26.9	7.9	1.99	.45	.61	.78	25.5	7.5	2.15	.45	.63	.80	24.0	7.0	2.28	.46	.65	.83	22.5	6.6	2.41	.47	.67	.86
10ACC-024 — C26-26 WITH G32V3-75 - C23-31 WITH G32V3-75 COOLING CAPACITY																										
63°F (17°C)	800	380	23.5	6.9	1.87	.76	.91	1.00	22.3	6.5	2.01	.78	.93	1.00	21.1	6.2	2.14	.80	.95	1.00	19.8	5.8	2.26	.83	.98	1.00
	900	425	24.0	7.0	1.89	.79	.94	1.00	22.8	6.7	2.03	.81	.96	1.00	21.5	6.3	2.16	.83	.99	1.00	20.3	5.9	2.28	.86	1.00	1.00
	1000	470	24.5	7.2	1.90	.82	.97	1.00	23.2	6.8	2.05	.84	.99	1.00	22.0	6.4	2.18	.86	1.00	1.00	20.8	6.1	2.31	.90	1.00	1.00
67°F (19°C)	800	380	25.0	7.3	1.93	.59	.74	.87	23.7	6.9	2.07	.60	.75	.90	22.3	6.5	2.20	.61	.78	.92	20.9	6.1	2.32	.63	.80	.95
	900	425	25.4	7.4	1.94	.60	.76	.91	24.0	7.0	2.09	.62	.79	.93	22.6	6.6	2.22	.63	.81	.96	21.2	6.2	2.34	.65	.84	.99
	1000	470	25.7	7.5	1.95	.62	.79	.94	24.3	7.1	2.10	.63	.82	.96	22.9	6.7	2.23	.65	.84	.99	21.5	6.3	2.35	.67	.87	1.00
71°F (22°C)	800	380	26.8	7.9	1.99	.43	.57	.71	25.3	7.4	2.14	.44	.58	.73	23.9	7.0	2.28	.44	.59	.75	22.4	6.6	2.40	.45	.61	.78
	900	425	27.1	7.9	2.00	.44	.59	.74	25.7	7.5	2.15	.44	.60	.76	24.2	7.1	2.30	.45	.62	.79	22.7	6.7	2.42	.46	.63	.81
	1000	470	27.4	8.0	2.01	.45	.61	.77	25.9	7.6	2.17	.45	.63	.79	24.4	7.2	2.31	.46	.64	.82	22.9	6.7	2.43	.47	.66	.85
10ACC-024 — C26-31 WITH G32V3-75 COOLING CAPACITY																										
63°F (17°C)	800	380	24.7	7.2	1.92	.76	.91	1.00	23.4	6.9	2.06	.78	.94	1.00	22.0	6.4	2.19	.81	.96	1.00	20.7	6.1	2.31	.83	.99	1.00
	900	425	25.2	7.4	1.93	.79	.95	1.00	23.9	7.0	2.08	.81	.97	1.00	22.5	6.6	2.22	.84	1.00	1.00	21.3	6.2	2.34	.87	1.00	1.00
	1000	470	25.7	7.5	1.95	.82	.98	1.00	24.4	7.2	2.10	.85	1.00	1.00	23.1	6.8	2.25	.88	1.00	1.00	21.9	6.4	2.37	.91	1.00	1.00
67°F (19°C)	800	380	26.4	7.7	1.97	.59	.73	.88	24.9	7.3	2.12	.60	.76	.90	23.4	6.9	2.26	.61	.78	.93	21.9	6.4	2.37	.63	.80	.96
	900	425	26.8	7.9	1.99	.60	.77	.91	25.3	7.4	2.14	.62	.79	.95	23.7	6.9	2.28	.64	.82	.97	22.2	6.5	2.39	.66	.85	.99
	1000	470	27.1	7.9	2.00	.62	.80	.95	25.6	7.5	2.15	.64	.82	.98	24.0	7.0	2.29	.66	.85	1.00	22.5	6.6	2.41	.68	.88	1.00
71°F (22°C)	800	380	28.2	8.3	2.04	.43	.57	.71	26.6	7.8	2.20	.44	.59	.73	25.0	7.3	2.34	.44	.60	.75	23.4	6.9	2.46	.45	.62	.78
	900	425	28.6	8.4	2.05	.44	.59	.74	27.0	7.9	2.21	.44	.61	.77	25.4	7.4	2.35	.45	.62	.79	23.7	6.9	2.48	.46	.64	.82
	1000	470	28.9	8.5	2.07	.45	.61	.78	27.3	8.0	2.23	.45	.63	.80	25.6	7.5	2.37	.46	.65	.83	24.0	7.0	2.49	.47	.67	.86
10ACC-024 — CR26-30N-F - CH33-36A/B/C-2F COOLING CAPACITY																										
63°F (17°C)	600	285	23.4	6.9	1.86	.70	.82	.94	22.1	6.5	2.00	.71	.85	.96	20.8	6.1	2.13	.73	.87	.98	19.6	5.7	2.24	.75	.89	1.00
	800	380	24.7	7.2	1.91	.75	.90	1.00	23.3	6.8	2.06	.78	.93	1.00	22.0	6.4	2.19	.80	.95	1.00	20.7	6.1	2.31	.82	.98	1.00
	1000	470	25.7	7.5	1.95	.81	.96	1.00	24.3	7.1	2.10	.84	.99	1.00	23.0	6.7	2.24	.86	1.00	1.00	21.8	6.4	2.36	.89	1.00	1.00
67°F (19°C)	600	285	25.1	7.4	1.93	.55	.67	.79	23.7	6.9	2.07	.56	.69	.81	22.4	6.6	2.21	.57	.70	.83	21.0	6.2	2.32	.58	.72	.86
	800	380	26.3	7.7	1.97	.59	.73	.87	24.8	7.3	2.12	.60	.75	.90	23.4	6.9	2.26	.61	.77	.92	21.9	6.4	2.37	.62	.80	.95
	1000	470	27.1	7.9	2.00	.62	.79	.94	25.6	7.5	2.15	.64	.81	.97	24.0	7.0	2.29	.65	.84	.99	22.5	6.6	2.41	.67	.87	1.00
71°F (22°C)	600	285	26.9	7.9	1.99	.42	.53	.64	25.5	7.5	2.15	.42	.54	.65	24.0	7.0	2.29	.43	.55	.68	22.6	6.6	2.41	.43	.56	.69
	800	380	28.1	8.2	2.04	.43	.57	.70	26.6	7.8	2.20	.44	.58	.72	25.1	7.4	2.34	.44	.59	.75	23.5	6.9	2.46	.45	.61	.77
	1000	470	28.9	8.5	2.07	.44	.61	.76	27.3	8.0	2.22	.45	.62	.79	25.7	7.5	2.37	.46	.64	.82	24.0	7.0	2.49	.47	.66	.85
10ACC-024 — CR26-18N-F WITH GHR32V3-75 COOLING CAPACITY																										
63°F (17°C)	810	380	22.1	6.5	1.81	.75	.90	1.00	20.9	6.1	1.95	.77	.93	1.00	19.7	5.8	2.07	.80	.95	1.00	18.6	5.5	2.18	.83	.98	1.00
	1010	475	22.9	6.7	1.84	.81	.97	1.00	21.7	6.4	1.98	.84	.98	1.00	20.6	6.0	2.11	.86	1.00	1.00	19.5	5.7	2.23	.89	1.00	1.00
67°F (19°C)	810	380	23.5	6.9	1.87	.58	.73	.87	22.2	6.5	2.01	.60	.75	.90	20.9	6.1	2.13	.61	.78	.92	19.7	5.8	2.25	.62	.80	.95
	1010	475	24.1	7.1	1.89	.62	.79	.93	22.8	6.7	2.03	.63	.81	.96	21.5	6.3	2.16	.65	.84	.98	20.2	5.9	2.28	.67	.87	1.00
71°F (22°C)	810	380	25.1	7.4	1.92	.43	.57	.71	23.8	7.0	2.07	.43	.58	.72	22.4	6.6	2.21	.44	.59	.75	21.1	6.2	2.33	.45	.61	.77
	1010	475	25.7	7.5	1.95	.44	.60	.77	24.3	7.1	2.10	.45	.62	.79	22.9	6.7	2.24	.46	.64	.82	21.5	6.3	2.35	.47	.66	.84
10ACC-024 — CR26-30N-F WITH GHR32V3-75 COOLING CAPACITY																										
63°F (17°C)	810	380	24.5	7.2	1.88	.77	.91	1.00	23.2	6.8	2.02	.78	.94	1.00	21.9	6.4	2.15	.81	.96	1.00	20.6	6.0	2.27	.84	.99	1.00
	1010	475	25.5	7.5	1.91	.82	.98	1.00	24.2	7.1	2.06	.85	.99	1.00	22.9	6.7	2.20	.87	1.00	1.00	21.7	6.4	2.32	.90	1.00	1.00
67°F (19°C)	810	380	26.1	7.6	1.93	.59	.74	.88	24.6	7.2	2.08	.60	.76	.91	23.2	6.8	2.21	.62	.78	.94	21.7	6.4	2.33	.63	.81	.96
	1010	475	26.8	7.9	1.96	.63	.80	.96	25.3	7.4	2.11	.64	.83	.98	23.8	7.0	2.24	.66	.85	1.00	22.3	6.5	2.36	.68	.88	1.00
71°F (22°C)	810	380	27.9	8.2	2.00	.43	.57	.71	26.3	7.7	2.15	.44	.59	.73	24.8	7.3	2.29	.44	.60	.76	23.2	6.8	2.41	.45	.62	.79
	1010	475	28.6	8.4	2.02	.45	.61	.78	27.0	7.9	2.18	.45	.63	.80	25.4	7.4	2.32	.46	.65	.83	23.8	7.0	2.44	.47	.67	.86
10ACC-024 — CH23-31 COOLING CAPACITY																										
63°F (17°C)	600	285	22.3	6.5	1.83	.70	.83	.95	21.0	6.2	1.96	.72	.85	.97	19.8	5.8	2.09	.73	.88	.99	18.6	5.5	2.20	.76	.90	1.00
	800	380	23.5	6.9	1.87	.76	.91	1.00	22.2	6.5	2.01	.78	.94	1.00	20.9	6.1	2.15	.81	.96	1.00	19.7	5.8	2.26	.83	.98	1.00
	1000	470	24.4	7.2	1.91	.83	.98	1.00	23.1	6.8	2.06	.85	1.00	1.00	22.0	6.4	2.19	.87	1.00	1.00	20.7	6.1	2.32	.90	1.00	1.00
67°F (19°C)	600	285	23.8	7.0	1.89	.56	.68	.79	22.5	6.6	2.03	.56	.69	.82	21.3	6.2	2.16	.57	.70	.84	19.9	5.8	2.27	.58	.73	.87
	800	380	24.9	7.3	1.93	.59	.74	.88	23.6	6.9	2.07	.60	.76	.91	22.2	6.5	2.21	.62	.78	.93	20.8	6.1	2.32	.63	.81	.96
	1000	470	25.6	7.5	1.96	.63	.80	.95	24.2	7.1	2.10	.64	.83	.98	22.8	6.7	2.24	.66	.85	1.00	21.4	6.3	2.36	.68	.88	1.00
71°F (22°C)	600	285	25.5	7.5	1.95	.42	.54	.65	24.2	7.1	2.10	.43	.54	.66	22.8	6.7	2.24	.43	.55	.68	21.5	6.3	2.36	.43	.56	.70
	800	380	26.6	7.8	1.99	.43	.58	.71	25.2	7.4	2.14	.44	.59	.73	23.7	6.9	2.28	.44	.60	.76	22.3	6.5	2.40	.45	.61	.78
	1000	470	27.3	8.0	2.02	.45	.62	.78	25.8	7.6	2.17	.45	.63	.80	24.3	7.1	2.31	.46	.65	.83	22.8	6.7	2.43	.47	.67	.86

RATINGS

NOTE - For Temperatures and Capacities not shown in tables, see bulletin - Cooling Unit Rating Table Correction Factor Data in Miscellaneous Engineering Data section.

Entering Wet Bulb Temperature	Total Air Volume		Outdoor Air Temperature Entering Outdoor Coil																							
			85°F (29°C)						95°F (35°C)						105°F (41°C)						115°F (46°C)					
			Total Cooling Capacity		Comp Motor kW Input	Sensible To Total Ratio (S/T) Dry Bulb			Total Cooling Capacity		Comp Motor kW Input	Sensible To Total Ratio (S/T) Dry Bulb			Total Cooling Capacity		Comp Motor kW Input	Sensible To Total Ratio (S/T) Dry Bulb			Total Cooling Capacity		Comp Motor kW Input	Sensible To Total Ratio (S/T) Dry Bulb		
	cfm	L/s	kBtuh	kW		75°F 24°C	80°F 27°C	85°F 29°C	kBtuh	kW		75°F 24°C	80°F 27°C	85°F 29°C	kBtuh	kW		75°F 24°C	80°F 27°C	85°F 29°C	kBtuh	kW		75°F 24°C	80°F 27°C	85°F 29°C
10ACC-024 — CH33-24/30A-2F COOLING CAPACITY																										
63°F (17°C)	600	285	23.2	6.8	1.85	.71	.84	.95	21.9	6.4	1.99	.72	.86	.97	20.7	6.1	2.11	.74	.88	.99	19.5	5.7	2.23	.76	.91	1.00
	800	380	24.4	7.2	1.90	.77	.92	1.00	23.1	6.8	2.04	.79	.94	1.00	21.8	6.4	2.17	.81	.96	1.00	20.5	6.0	2.29	.84	.99	1.00
	1000	470	25.3	7.4	1.93	.83	.98	1.00	24.0	7.0	2.08	.85	1.00	1.00	22.8	6.7	2.22	.88	1.00	1.00	21.6	6.3	2.35	.91	1.00	1.00
67°F (19°C)	600	285	24.8	7.3	1.91	.56	.68	.80	23.4	6.9	2.05	.57	.70	.83	22.1	6.5	2.19	.57	.71	.85	20.8	6.1	2.30	.59	.73	.87
	800	380	25.8	7.6	1.95	.59	.74	.89	24.4	7.2	2.10	.61	.77	.91	23.0	6.7	2.23	.62	.79	.94	21.6	6.3	2.35	.63	.81	.96
	1000	470	26.5	7.8	1.97	.63	.81	.96	25.1	7.4	2.12	.64	.83	.98	23.6	6.9	2.26	.66	.86	1.00	22.2	6.5	2.38	.68	.88	1.00
71°F (22°C)	600	285	26.5	7.8	1.97	.42	.54	.66	25.1	7.4	2.12	.43	.55	.67	23.7	6.9	2.26	.43	.56	.69	22.3	6.5	2.39	.43	.57	.71
	800	380	27.6	8.1	2.01	.43	.58	.72	26.1	7.6	2.16	.44	.59	.74	24.6	7.2	2.31	.44	.61	.76	23.1	6.8	2.43	.45	.62	.79
	1000	470	28.2	8.3	2.03	.45	.62	.78	26.7	7.8	2.19	.46	.63	.81	25.1	7.4	2.33	.46	.65	.84	23.6	6.9	2.46	.47	.67	.86
10ACC-024 — CH33-30A-2F WITH G60UHV-36A-070 COOLING CAPACITY																										
63°F (17°C)	860	405	24.7	7.2	1.91	.79	.94	1.00	23.4	6.9	2.05	.81	.96	1.00	22.1	6.5	2.18	.83	.99	1.00	20.9	6.1	2.30	.86	1.00	1.00
	1000	470	25.4	7.4	1.93	.83	.98	1.00	24.1	7.1	2.08	.86	.99	1.00	22.8	6.7	2.22	.88	1.00	1.00	21.6	6.3	2.34	.91	1.00	1.00
67°F (19°C)	860	405	26.1	7.6	1.96	.61	.77	.91	24.7	7.2	2.11	.62	.79	.93	23.3	6.8	2.24	.63	.81	.96	21.8	6.4	2.36	.65	.84	.98
	1000	470	26.6	7.8	1.97	.63	.81	.96	25.1	7.4	2.12	.65	.83	.98	23.7	6.9	2.26	.66	.86	.99	22.2	6.5	2.38	.68	.89	1.00
71°F (22°C)	860	405	27.8	8.1	2.02	.44	.59	.74	26.3	7.7	2.17	.44	.60	.76	24.8	7.3	2.31	.45	.62	.79	23.3	6.8	2.44	.45	.64	.81
	1000	470	28.3	8.3	2.03	.45	.62	.78	26.8	7.9	2.19	.46	.63	.81	25.2	7.4	2.33	.46	.65	.83	23.6	6.9	2.45	.47	.67	.86
10ACC-024 — CH33-36A-2F WITH G60UHV-36A-070 COOLING CAPACITY																										
63°F (17°C)	860	405	25.0	7.3	1.91	.77	.92	1.00	23.6	6.9	2.05	.79	.95	1.00	22.3	6.5	2.19	.82	.97	1.00	21.0	6.2	2.31	.84	1.00	1.00
	1000	470	25.6	7.5	1.94	.81	.97	1.00	24.3	7.1	2.08	.84	.99	1.00	23.0	6.7	2.22	.86	1.00	1.00	21.8	6.4	2.35	.89	1.00	1.00
67°F (19°C)	860	405	26.6	7.8	1.97	.59	.75	.89	25.1	7.4	2.12	.61	.77	.92	23.6	6.9	2.25	.62	.79	.95	22.1	6.5	2.37	.64	.82	.97
	1000	470	27.1	7.9	1.99	.62	.79	.94	25.6	7.5	2.14	.64	.81	.97	24.0	7.0	2.27	.65	.84	.99	22.5	6.6	2.39	.67	.87	1.00
71°F (22°C)	860	405	28.4	8.3	2.03	.44	.58	.72	26.8	7.9	2.19	.44	.59	.75	25.3	7.4	2.33	.44	.60	.77	23.7	6.9	2.45	.45	.62	.79
	1000	470	28.9	8.5	2.05	.44	.61	.76	27.3	8.0	2.21	.45	.62	.79	25.7	7.5	2.35	.46	.64	.82	24.0	7.0	2.47	.47	.66	.85
10ACC-024 — CH33-36B-2F WITH G60UHV-36B-090 COOLING CAPACITY																										
63°F (17°C)	720	340	24.2	7.1	1.89	.74	.88	1.00	22.9	6.7	2.03	.76	.91	1.00	21.6	6.3	2.16	.78	.93	1.00	20.3	5.9	2.28	.81	.96	1.00
	860	405	25.0	7.3	1.92	.79	.94	1.00	23.6	6.9	2.07	.81	.96	1.00	22.3	6.5	2.20	.83	.99	1.00	21.0	6.2	2.32	.86	1.00	1.00
	1000	470	25.7	7.5	1.95	.83	.98	1.00	24.3	7.1	2.10	.85	1.00	1.00	23.1	6.8	2.24	.88	1.00	1.00	21.8	6.4	2.37	.91	1.00	1.00
67°F (19°C)	720	340	25.8	7.6	1.95	.58	.72	.85	24.4	7.2	2.10	.59	.73	.87	23.0	6.7	2.23	.60	.75	.90	21.5	6.3	2.35	.61	.78	.93
	860	405	26.5	7.8	1.98	.60	.76	.91	25.0	7.3	2.12	.62	.78	.93	23.5	6.9	2.26	.63	.81	.96	22.0	6.4	2.38	.65	.84	.99
	1000	470	27.0	7.9	1.99	.63	.80	.96	25.4	7.4	2.14	.64	.83	.98	23.9	7.0	2.28	.66	.86	1.00	22.4	6.6	2.40	.68	.89	1.00
71°F (22°C)	720	340	27.6	8.1	2.02	.43	.56	.69	26.1	7.6	2.17	.43	.57	.71	24.6	7.2	2.31	.43	.58	.73	23.1	6.8	2.43	.44	.60	.75
	860	405	28.2	8.3	2.04	.44	.59	.73	26.7	7.8	2.19	.44	.60	.76	25.1	7.4	2.34	.45	.62	.78	23.5	6.9	2.46	.46	.63	.81
	1000	470	28.7	8.4	2.05	.45	.62	.78	27.1	7.9	2.21	.45	.63	.81	25.5	7.5	2.35	.46	.65	.83	23.9	7.0	2.48	.47	.67	.86
10ACC-024 — CH23-31 WITH GHR32V3-75 COOLING CAPACITY																										
63°F (17°C)	810	380	23.5	6.9	1.86	.76	.91	1.00	22.3	6.5	2.00	.78	.93	1.00	21.0	6.2	2.13	.81	.96	1.00	19.7	5.8	2.24	.84	.99	1.00
	1010	475	24.4	7.2	1.89	.82	.98	1.00	23.1	6.8	2.04	.85	.99	1.00	21.9	6.4	2.17	.87	1.00	1.00	20.7	6.1	2.30	.90	1.00	1.00
67°F (19°C)	810	380	25.0	7.3	1.91	.59	.74	.88	23.6	6.9	2.06	.60	.76	.90	22.2	6.5	2.19	.62	.78	.93	20.8	6.1	2.30	.63	.81	.96
	1010	475	25.7	7.5	1.94	.63	.80	.95	24.2	7.1	2.09	.64	.82	.97	22.8	6.7	2.22	.65	.85	.99	21.4	6.3	2.34	.68	.88	1.00
71°F (22°C)	810	380	26.7	7.8	1.98	.43	.57	.72	25.2	7.4	2.13	.44	.59	.73	23.8	7.0	2.27	.44	.60	.76	22.3	6.5	2.39	.45	.62	.78
	1010	475	27.3	8.0	2.00	.45	.61	.78	25.8	7.6	2.15	.45	.63	.80	24.3	7.1	2.29	.46	.65	.83	22.8	6.7	2.41	.47	.67	.86
10ACC-024 — CB29M-21/26 - CB28UH-018/024 COOLING CAPACITY																										
63°F (17°C)	650	305	21.7	6.4	1.79	.72	.86	.97	20.5	6.0	1.92	.74	.88	.99	19.4	5.7	2.04	.76	.90	1.00	18.2	5.3	2.15	.78	.93	1.00
	800	380	22.5	6.6	1.82	.77	.91	1.00	21.3	6.2	1.95	.79	.93	1.00	20.1	5.9	2.08	.81	.96	1.00	18.9	5.5	2.19	.83	.98	1.00
	950	450	23.1	6.8	1.84	.81	.96	1.00	21.9	6.4	1.98	.83	.98	1.00	20.8	6.1	2.11	.86	1.00	1.00	19.6	5.7	2.23	.88	1.00	1.00
67°F (19°C)	650	305	23.1	6.8	1.84	.57	.70	.82	21.9	6.4	1.98	.58	.71	.84	20.7	6.1	2.11	.58	.73	.87	19.4	5.7	2.22	.60	.75	.90
	800	380	23.8	7.0	1.87	.59	.74	.88	22.5	6.6	2.01	.60	.76	.91	21.2	6.2	2.14	.62	.78	.93	19.9	5.8	2.25	.63	.81	.96
	950	450	24.3	7.1	1.89	.62	.79	.93	23.0	6.7	2.03	.63	.81	.96	21.7	6.4	2.16	.65	.83	.98	20.4	6.0	2.28	.67	.86	1.00
71°F (22°C)	650	305	24.7	7.2	1.90	.43	.55	.67	23.4	6.9	2.05	.43	.56	.68	22.1	6.5	2.18	.43	.57	.70	20.8	6.1	2.30	.44	.58	.73
	800	380	25.4	7.4	1.93	.43	.57	.72	24.1	7.1	2.08	.44	.59	.73	22.7	6.7	2.21	.44	.60	.76	21.3	6.2	2.33	.45	.62	.79
	950	450	25.9	7.6	1.95	.44	.61	.76	24.5	7.2	2.10	.45	.62	.79	23.1	6.8	2.23	.45	.64	.81	21.7	6.4	2.35	.47	.65	.84
10ACC-024 — CB29M-31 - CB28UH-030 COOLING CAPACITY																										
63°F (17°C)	600	285	22.5	6.6	1.83	.71	.84	.94	21.3	6.2	1.96	.72	.85	.97	20.1	5.9	2.09	.74	.88	.99	18.9	5.5	2.20	.76	.90	1.00
	800	380	23.7	6.9	1.88	.77	.91	1.00	22.5	6.6	2.01	.78	.93	1.00	21.2	6.2	2.14	.81	.96	1.00	19.9	5.8	2.26	.83	.98	1.00
	1000	470	24.6	7.2	1.91	.82	.98	1.00	23.4	6.9	2.05	.85	.99	1.00	22.2	6.5	2.19	.87	1.00	1.00	21.0	6.2	2.32	.90	1.00	1.00
67°F (19°C)	600	285	24.1	7.1	1.89	.56	.68	.80	22.8	6.7	2.03	.57	.69	.82	21.5	6.3	2.16	.57	.71	.84	20.2	5.9	2.28	.58	.73	.87
	800	380	25.2	7.4	1.93	.59	.74	.88	23.8	7.0	2.07	.60	.76	.90	22.4	6.6	2.21	.62	.78	.93	21.0	6.2	2.32	.63	.81	.96
	1000	470	25.9	7.6	1.96	.63	.80	.95	24.5	7.2	2.10	.64	.82	.97	23.0	6.7	2.24	.66	.85	.99	21.6	6.3	2.36	.67	.88	1.00
71°F (22°C)	600	285	25.8	7.6	1.95	.42	.54	.65	24.5	7.2	2.10	.42	.54	.66	23.1	6.8	2.24	.43	.55	.68	21.7	6.4	2.36	.43	.57	.70
	800	380	26.9	7.9	1.99	.43	.57	.71	25.4	7.4	2.14	.44	.59	.74	24.0	7.0	2.28	.44	.60	.76	22.5	6.6	2.41	.45	.62	.78
	1000	470	27.5	8.1	2.02	.45	.61	.78	26.1	7.6	2.17	.45	.63	.80	24.5	7.2	2.31	.46	.65	.83	23.0	6.7	2.43	.47	.67	.86
10ACC-024 — CB30M-21/26 - CB30U-21/26 COOLING CAPACITY																										
63°F (17°C)	600	285	23.4	6.9	1.85	.70	.83	.94	22.2	6.5	1.99	.71	.85	.97	20.9	6.1	2.12	.73	.87	.99	19.6	5.7	2.23	.75	.90	1.00
	800	380	24.7	7.2	1.90	.76	.91	1.00	23.4	6.9	2.04	.78	.94	1.00	22.0	6.4	2.17	.81	.96	1.00	20.7	6.1	2.29	.83	.99	1.00
	1000	470	25.7	7.5	1.94	.82	.98	1.00	24.4	7.2	2.09	.85	1.00	1.00	23.1	6.8	2.23	.88	1.00	1.00	21.9	6.4	2.35	.90	1.00	1.00
67°F (19°C)	600	285	25.1	7.4	1.92	.55	.67	.79	23.8	7.0	2.06	.56	.69	.82	22.4	6.6	2.19	.57	.71	.84	21.0	6.2	2.31	.58	.72	.86
	800	380	26.3	7.7	1.96	.59	.74	.88	24.8	7.3	2.11	.60	.76	.90	23.4	6.9	2.24	.61	.78	.93	21.9	6.4	2.36	.63	.80	.96
	1000	470	27.1	7.9	1.99	.62	.80	.95	25.6	7.5	2.14	.64	.82	.97	24.0	7.0	2.27	.66	.85	1.00	22.5	6.6	2.39	.68	.88	1.00
71°F (22°C)	600	285	26.9	7.9	1.98	.42	.54	.65	25.5	7.5	2.13	.42	.54	.66	24.0	7.0	2.27	.43	.55	.68	22.6	6.6	2.39	.43	.56	.69
	800	380	28.1	8.2	2.02	.43	.57	.71	26.6	7.8	2.18	.44	.58	.73	25.0	7.3	2.32	.44	.60	.76	23.4	6.9	2.44	.45	.62	.78
	1000	470	28.9	8.5	2.05	.45	.61	.78	27.2	8.0	2.21	.45	.63	.80	25.6	7.5	2.35	.46	.65	.83	24.0	7.0	2.47	.47	.67	.86

RATINGS

NOTE - For Temperatures and Capacities not shown in tables, see bulletin - Cooling Unit Rating Table Correction Factor Data in Miscellaneous Engineering Data section.

Entering Wet Bulb Temperature	Total Air Volume		Outdoor Air Temperature Entering Outdoor Coil																							
			85°F (29°C)						95°F (35°C)						105°F (41°C)						115°F (46°C)					
			Total Cooling Capacity		Comp Motor kW Input	Sensible To Total Ratio (S/T) Dry Bulb			Total Cooling Capacity		Comp Motor kW Input	Sensible To Total Ratio (S/T) Dry Bulb			Total Cooling Capacity		Comp Motor kW Input	Sensible To Total Ratio (S/T) Dry Bulb			Total Cooling Capacity		Comp Motor kW Input	Sensible To Total Ratio (S/T) Dry Bulb		
	cfm	L/s	kBtuh	kW		75°F 24°C	80°F 27°C	85°F 29°C	kBtuh	kW		75°F 24°C	80°F 27°C	85°F 29°C	kBtuh	kW		75°F 24°C	80°F 27°C	85°F 29°C	kBtuh	kW		75°F 24°C	80°F 27°C	85°F 29°C
10ACC-024 — CB30M-31 - CB30U-31 COOLING CAPACITY																										
63°F (17°C)	1050	495	34.4	10.1	2.85	.75	.90	1.00	32.6	9.6	3.03	.77	.92	1.00	30.7	9.0	3.20	.79	.94	1.00	28.8	8.4	3.36	.81	.97	1.00
	1150	545	35.0	10.3	2.87	.77	.92	1.00	33.1	9.7	3.05	.79	.95	1.00	31.2	9.1	3.23	.81	.97	1.00	29.3	8.6	3.40	.84	1.00	1.00
	1250	590	35.5	10.4	2.89	.79	.95	1.00	33.6	9.8	3.08	.81	.97	1.00	31.7	9.3	3.26	.84	1.00	1.00	29.8	8.7	3.43	.86	1.00	1.00
67°F (19°C)	1050	495	36.7	10.8	2.94	.59	.72	.86	34.7	10.2	3.13	.60	.74	.88	32.7	9.6	3.31	.61	.76	.91	30.6	9.0	3.49	.62	.79	.94
	1150	545	37.2	10.9	2.96	.60	.75	.89	35.2	10.3	3.15	.61	.76	.91	33.1	9.7	3.34	.62	.79	.94	31.0	9.1	3.51	.64	.81	.97
	1250	590	37.6	11.0	2.98	.61	.77	.91	35.5	10.4	3.17	.62	.79	.94	33.5	9.8	3.35	.64	.81	.97	31.3	9.2	3.53	.65	.84	1.00
71°F (22°C)	1050	495	39.2	11.5	3.04	.44	.57	.70	37.1	10.9	3.24	.44	.58	.72	35.0	10.3	3.44	.45	.59	.74	32.8	9.6	3.63	.45	.61	.76
	1150	545	39.7	11.6	3.06	.44	.58	.72	37.6	11.0	3.26	.45	.59	.74	35.4	10.4	3.46	.45	.61	.76	33.2	9.7	3.66	.46	.62	.79
	1250	590	40.1	11.8	3.08	.45	.59	.74	37.9	11.1	3.28	.45	.61	.76	35.7	10.5	3.48	.46	.62	.79	33.5	9.8	3.68	.46	.64	.82
10ACC-030 — C33-30A/B COOLING CAPACITY																										
63°F (17°C)	870	410	28.6	8.4	2.32	.77	.91	1.00	27.6	8.1	2.58	.79	.93	1.00	26.4	7.7	2.87	.80	.95	1.00	25.4	7.4	3.18	.82	.97	1.00
	1070	505	29.8	8.7	2.36	.82	.97	1.00	28.8	8.4	2.62	.83	.99	1.00	27.6	8.1	2.92	.85	1.00	1.00	26.6	7.8	3.24	.87	1.00	1.00
	1270	600	30.8	9.0	2.40	.86	1.00	1.00	29.8	8.7	2.67	.88	1.00	1.00	28.6	8.4	2.97	.90	1.00	1.00	27.6	8.1	3.30	.93	1.00	1.00
67°F (19°C)	870	410	30.0	8.8	2.37	.62	.75	.88	29.0	8.5	2.64	.63	.76	.90	27.8	8.1	2.93	.64	.78	.92	26.6	7.8	3.26	.65	.79	.94
	1070	505	31.2	9.1	2.41	.65	.80	.94	30.0	8.8	2.68	.66	.81	.96	28.8	8.4	2.98	.67	.83	.98	27.6	8.1	3.31	.68	.85	1.00
	1270	600	32.0	9.4	2.45	.68	.84	.99	30.8	9.0	2.72	.69	.86	1.00	29.6	8.7	3.02	.70	.88	1.00	28.2	8.3	3.34	.71	.90	1.00
71°F (22°C)	870	410	31.2	9.1	2.42	.48	.61	.73	30.2	8.9	2.69	.48	.61	.74	29.0	8.5	2.99	.49	.62	.76	27.8	8.1	3.32	.49	.63	.77
	1070	505	32.6	9.6	2.47	.50	.64	.78	31.4	9.2	2.75	.50	.65	.79	30.2	8.9	3.05	.50	.66	.81	29.0	8.5	3.38	.51	.67	.83
	1270	600	33.4	9.8	2.51	.51	.67	.82	32.2	9.4	2.79	.51	.68	.84	31.0	9.1	3.09	.52	.69	.86	29.6	8.7	3.43	.52	.71	.88
10ACC-030 — C33-36A/B/C COOLING CAPACITY																										
63°F (17°C)	870	410	29.0	8.5	2.33	.78	.92	1.00	27.8	8.1	2.59	.79	.94	1.00	26.8	7.9	2.88	.81	.96	1.00	25.6	7.5	3.20	.82	.98	1.00
	1070	505	30.2	8.9	2.38	.83	.98	1.00	29.0	8.5	2.64	.84	1.00	1.00	28.0	8.2	2.94	.86	1.00	1.00	26.8	7.9	3.27	.88	1.00	1.00
	1270	600	31.2	9.1	2.42	.87	1.00	1.00	30.2	8.9	2.69	.89	1.00	1.00	29.2	8.6	3.00	.91	1.00	1.00	28.0	8.2	3.33	.94	1.00	1.00
67°F (19°C)	870	410	30.4	8.9	2.38	.62	.76	.89	29.2	8.6	2.65	.63	.77	.91	28.0	8.2	2.94	.64	.78	.93	27.0	7.9	3.27	.65	.80	.95
	1070	505	31.6	9.3	2.43	.65	.81	.96	30.4	8.9	2.70	.66	.82	.97	29.2	8.6	3.00	.67	.84	.99	27.8	8.1	3.32	.69	.86	1.00
	1270	600	32.4	9.5	2.46	.68	.85	1.00	31.0	9.1	2.73	.69	.87	1.00	29.8	8.7	3.03	.71	.89	1.00	28.6	8.4	3.36	.72	.92	1.00
71°F (22°C)	870	410	31.6	9.3	2.43	.48	.61	.74	30.4	8.9	2.70	.48	.62	.75	29.4	8.6	3.01	.49	.63	.76	28.0	8.2	3.34	.49	.64	.78
	1070	505	32.8	9.6	2.49	.49	.64	.79	31.6	9.3	2.76	.50	.65	.80	30.4	8.9	3.06	.50	.66	.82	29.2	8.6	3.40	.51	.68	.84
	1270	600	33.8	9.9	2.53	.51	.67	.84	32.6	9.6	2.81	.52	.69	.85	31.2	9.1	3.11	.52	.70	.87	30.0	8.8	3.45	.53	.72	.90
10ACC-030 — C23-41 COOLING CAPACITY																										
63°F (17°C)	800	380	27.6	8.1	2.28	.75	.88	.99	26.6	7.8	2.54	.76	.90	1.00	25.6	7.5	2.83	.78	.91	1.00	24.6	7.2	3.14	.79	.93	1.00
	1000	470	29.0	8.5	2.33	.80	.94	1.00	27.8	8.1	2.59	.81	.96	1.00	26.8	7.9	2.88	.83	.98	1.00	25.6	7.5	3.20	.84	.99	1.00
	1200	565	29.8	8.7	2.36	.84	.99	1.00	28.8	8.4	2.63	.86	1.00	1.00	27.6	8.1	2.92	.87	1.00	1.00	26.6	7.8	3.25	.90	1.00	1.00
67°F (19°C)	800	380	29.0	8.5	2.33	.61	.73	.85	28.0	8.2	2.59	.61	.74	.86	27.0	7.9	2.89	.62	.75	.88	25.8	7.6	3.21	.63	.77	.90
	1000	470	30.4	8.9	2.38	.63	.77	.91	29.2	8.6	2.65	.64	.79	.93	28.0	8.2	2.94	.65	.80	.95	27.0	7.9	3.27	.66	.82	.97
	1200	565	31.2	9.1	2.42	.66	.82	.97	30.0	8.8	2.69	.67	.84	.98	29.0	8.5	2.98	.68	.85	1.00	27.6	8.1	3.31	.70	.88	1.00
71°F (22°C)	800	380	30.2	8.9	2.37	.47	.59	.71	29.2	8.6	2.64	.48	.60	.72	28.0	8.2	2.94	.48	.61	.73	27.0	7.9	3.27	.48	.62	.74
	1000	470	31.6	9.3	2.43	.49	.62	.75	30.4	8.9	2.70	.49	.63	.77	29.4	8.6	3.01	.49	.64	.78	28.2	8.3	3.34	.50	.65	.80
	1200	565	32.6	9.6	2.47	.50	.65	.80	31.4	9.2	2.75	.50	.66	.82	30.2	8.9	3.05	.51	.67	.83	29.0	8.5	3.39	.52	.69	.85
10ACC-030 — C26-31 COOLING CAPACITY																										
63°F (17°C)	870	410	29.0	8.5	2.33	.78	.92	1.00	28.0	8.2	2.59	.79	.94	1.00	26.8	7.9	2.88	.81	.96	1.00	25.6	7.5	3.20	.83	.98	1.00
	1070	505	30.2	8.9	2.38	.83	.98	1.00	29.2	8.6	2.64	.85	.99	1.00	28.0	8.2	2.94	.87	1.00	1.00	27.0	7.9	3.27	.89	1.00	1.00
	1270	600	31.2	9.1	2.42	.88	1.00	1.00	30.2	8.9	2.69	.90	1.00	1.00	29.2	8.6	3.00	.93	1.00	1.00	28.0	8.2	3.33	.95	1.00	1.00
67°F (19°C)	870	410	30.6	9.0	2.40	.62	.76	.89	29.6	8.7	2.66	.63	.77	.91	28.4	8.3	2.96	.64	.78	.93	27.2	8.0	3.28	.65	.80	.95
	1070	505	31.8	9.3	2.44	.65	.81	.96	30.6	9.0	2.71	.66	.83	.98	29.4	8.6	3.01	.68	.85	.99	28.0	8.2	3.33	.69	.87	1.00
	1270	600	32.6	9.6	2.47	.69	.86	1.00	31.2	9.1	2.74	.70	.88	1.00	30.0	8.8	3.04	.71	.91	1.00	28.6	8.4	3.37	.73	.93	1.00
71°F (22°C)	870	410	32.2	9.4	2.46	.48	.61	.73	31.0	9.1	2.73	.48	.62	.75	29.8	8.7	3.03	.48	.62	.76	28.6	8.4	3.36	.49	.63	.78
	1070	505	33.2	9.7	2.51	.49	.64	.79	32.2	9.4	2.78	.50	.65	.81	30.8	9.0	3.09	.50	.66	.83	29.4	8.6	3.42	.51	.68	.85
	1270	600	34.2	10.0	2.54	.51	.68	.84	32.8	9.6	2.82	.51	.69	.86	31.4	9.2	3.13	.52	.70	.88	30.2	8.9	3.46	.53	.72	.91
10ACC-030 — C26-41 COOLING CAPACITY																										
63°F (17°C)	870	410	29.2	8.6	2.34	.79	.93	1.00	28.2	8.3	2.60	.80	.95	1.00	27.0	7.9	2.89	.81	.97	1.00	25.8	7.6	3.21	.83	.99	1.00
	1070	505	30.6	9.0	2.39	.84	.99	1.00	29.4	8.6	2.66	.86	1.00	1.00	28.4	8.3	2.96	.88	1.00	1.00	27.2	8.0	3.29	.90	1.00	1.00
	1270	600	31.8	9.3	2.44	.90	1.00	1.00	30.6	9.0	2.71	.92	1.00	1.00	29.6	8.7	3.02	.94	1.00	1.00	28.4	8.3	3.35	.96	1.00	1.00
67°F (19°C)	870	410	30.8	9.0	2.40	.62	.76	.90	29.8	8.7	2.67	.63	.78	.92	28.6	8.4	2.97	.64	.79	.94	27.2	8.0	3.29	.65	.81	.96
	1070	505	32.0	9.4	2.45	.66	.82	.97	30.8	9.0	2.72	.67	.84	.98	29.6	8.7	3.02	.68	.86	1.00	28.2	8.3	3.34	.70	.88	1.00
	1270	600	32.8	9.6	2.48	.70	.88	1.00	31.6	9.3	2.75	.71	.90	1.00	30.2	8.9	3.05	.72	.92	1.00	28.8	8.4	3.38	.74	.94	1.00
71°F (22°C)	870	410	32.4	9.5	2.47	.48	.61	.74	31.2	9.1	2.74	.48	.62	.76	30.0	8.8	3.04	.48	.63	.77	28.8	8.4	3.37	.49	.64	.79
	1070	505	33.6	9.8	2.52	.49	.65	.80	32.2	9.4	2.79	.50	.66	.82	31.0	9.1	3.10	.50	.67	.84	29.8	8.7	3.43	.51	.69	.86
	1270	600	34.4	10.1	2.56	.51	.69	.86	33.0	9.7	2.83	.52	.70	.88	31.8	9.3	3.14	.52	.71	.90	30.4	8.9	3.48	.53	.73	.92
10ACC-030 — C33-30A WITH G60UHV-36A-070 COOLING CAPACITY																										
63°F (17°C)	860	405	28.4	8.3	2.31	.76	.90	1.00	27.4	8.0	2.57	.78	.92	1.00	26.4	7.7	2.86	.79	.94	1.00	25.2	7.4	3.18	.81	.96	1.00
	1000	470	29.4	8.6	2.34	.80	.95	1.00	28.2	8.3	2.60	.81	.96	1.00	27.2	8.0	2.90	.83	.98	1.00	26.0	7.6	3.22	.85	1.00	1.00
	1110	525	30.0	8.8	2.36	.82	.98	1.00	28.8	8.4	2.63	.84	.99	1.00	27.6	8.1	2.92	.85	1.00	1.00	26.6	7.8	3.25	.87	1.00	1.00
67°F (19°C)	860	405	29.8	8.7	2.37	.61	.74	.87	28.8	8.4	2.63	.62	.75	.89	27.6	8.1	2.92	.63	.77	.91	26.6	7.8	3.25	.64	.78	.93
	1000	470	30.8	9.0	2.40	.63	.78	.92	29.6	8.7	2.67	.64	.79	.94	28.4	8.3	2.97	.65	.81	.96	27.2	8.0	3.29	.66	.82	.98
	1110	525	31.2	9.1	2.42	.65	.80	.95	30.0	8.8	2.69	.66	.82	.97	29.0	8.5	2.98	.67	.83	.99	27.6	8.1	3.31	.68	.85	1.00
71°F (22°C)	860	405	31.0	9.1	2.41	.47	.60	.74	30.0	8.8	2.68	.47	.61	.73	29.0	8.5	2.98	.47	.61	.75	27.6	8.1	3.31	.48	.62	.76
	1000	470	32.0	9.4	2.45	.48	.62	.76	31.0	9.1	2.73	.49	.63	.77	29.8	8.7	3.03	.49	.64	.79	28.6	8.4	3.36	.50	.65	.80
	1110	525	32.6	9.6	2.48	.49	.64	.78	31.4	9.2	2.75	.49	.65	.79	30.2	8.9	3.05	.50	.66	.81	29.0	8.5	3.39	.50	.67	.83

RATINGS

NOTE - For Temperatures and Capacities not shown in tables, see bulletin - Cooling Unit Rating Table Correction Factor Data in Miscellaneous Engineering Data section.

Entering Wet Bulb Temperature	Total Air Volume		Outdoor Air Temperature Entering Outdoor Coil																							
			85°F (29°C)						95°F (35°C)						105°F (41°C)						115°F (46°C)					
			Total Cooling Capacity		Comp Motor kW Input	Sensible To Total Ratio (S/T) Dry Bulb			Total Cooling Capacity		Comp Motor kW Input	Sensible To Total Ratio (S/T) Dry Bulb			Total Cooling Capacity		Comp Motor kW Input	Sensible To Total Ratio (S/T) Dry Bulb			Total Cooling Capacity		Comp Motor kW Input	Sensible To Total Ratio (S/T) Dry Bulb		
	cfm	L/s	kBtuh	kW		75°F 24°C	80°F 27°C	85°F 29°C	kBtuh	kW		75°F 24°C	80°F 27°C	85°F 29°C	kBtuh	kW		75°F 24°C	80°F 27°C	85°F 29°C	kBtuh	kW		75°F 24°C	80°F 27°C	85°F 29°C
10ACC-030 — C33-36A WITH G60UHV-36A-070 COOLING CAPACITY																										
63°F (17°C)	860	405	28.8	8.4	2.32	.77	.91	1.00	27.6	8.1	2.58	.78	.93	1.00	26.6	7.8	2.87	.80	.95	1.00	25.4	7.4	3.19	.81	.97	1.00
	1000	470	29.6	8.7	2.36	.81	.96	1.00	28.6	8.4	2.62	.82	.98	1.00	27.4	8.0	2.91	.84	.99	1.00	26.4	7.7	3.24	.86	1.00	1.00
	1110	525	30.2	8.9	2.38	.83	.99	1.00	29.2	8.6	2.64	.85	1.00	1.00	28.0	8.2	2.94	.86	1.00	1.00	27.0	7.9	3.27	.89	1.00	1.00
67°F (19°C)	860	405	30.2	8.9	2.38	.61	.75	.88	29.2	8.6	2.64	.62	.76	.89	28.0	8.2	2.93	.63	.77	.91	26.8	7.9	3.26	.64	.79	.94
	1000	470	31.0	9.1	2.41	.64	.78	.93	30.0	8.8	2.68	.65	.80	.95	28.8	8.4	2.98	.66	.82	.97	27.6	8.1	3.30	.67	.83	.99
	1110	525	31.6	9.3	2.43	.65	.81	.96	30.4	8.9	2.70	.66	.82	.98	29.2	8.6	3.00	.67	.84	.99	28.0	8.2	3.33	.68	.86	1.00
71°F (22°C)	860	405	31.4	9.2	2.43	.47	.60	.73	30.4	8.9	2.70	.48	.61	.74	29.2	8.6	3.00	.48	.62	.75	28.0	8.2	3.33	.48	.63	.77
	1000	470	32.4	9.5	2.47	.48	.63	.76	31.2	9.1	2.74	.49	.64	.78	30.0	8.8	3.04	.49	.65	.79	28.8	8.4	3.38	.50	.66	.81
	1110	525	33.0	9.7	2.49	.49	.64	.79	31.8	9.3	2.77	.49	.65	.80	30.6	9.0	3.07	.50	.66	.82	29.2	8.6	3.41	.50	.68	.84
10ACC-030 — C33-30B WITH G60UHV-36B-090 COOLING CAPACITY																										
63°F (17°C)	940	445	29.0	8.5	2.33	.78	.93	1.00	27.8	8.1	2.59	.80	.95	1.00	26.8	7.9	2.88	.81	.96	1.00	25.6	7.5	3.20	.83	.98	1.00
	1030	485	29.4	8.6	2.35	.80	.95	1.00	28.4	8.3	2.61	.82	.97	1.00	27.2	8.0	2.90	.83	.99	1.00	26.2	7.7	3.22	.85	1.00	1.00
	1140	540	30.0	8.8	2.37	.83	.98	1.00	29.0	8.5	2.63	.84	1.00	1.00	27.8	8.1	2.93	.86	1.00	1.00	26.8	7.9	3.26	.88	1.00	1.00
67°F (19°C)	940	445	30.4	8.9	2.38	.62	.76	.90	29.2	8.6	2.65	.63	.77	.91	28.2	8.3	2.95	.64	.79	.93	27.0	7.9	3.27	.65	.81	.96
	1030	485	30.8	9.0	2.40	.63	.78	.92	29.8	8.7	2.67	.64	.79	.94	28.6	8.4	2.97	.65	.81	.96	27.4	8.0	3.29	.66	.83	.98
	1140	540	31.4	9.2	2.42	.65	.81	.96	30.2	8.9	2.69	.66	.82	.98	29.0	8.5	2.99	.67	.84	.99	27.8	8.1	3.32	.68	.86	1.00
71°F (22°C)	940	445	31.8	9.3	2.44	.48	.60	.74	30.6	9.0	2.70	.48	.62	.75	29.4	8.6	3.01	.48	.63	.77	28.2	8.3	3.34	.49	.64	.78
	1030	485	32.2	9.4	2.46	.48	.62	.76	31.0	9.1	2.73	.48	.63	.77	29.8	8.7	3.03	.49	.64	.79	28.6	8.4	3.36	.49	.65	.81
	1140	540	32.8	9.6	2.48	.49	.64	.79	31.6	9.3	2.76	.49	.65	.80	30.4	8.9	3.06	.50	.66	.82	29.2	8.6	3.40	.50	.67	.84
10ACC-030 — C33-36B WITH G60UHV-36B-090 COOLING CAPACITY																										
63°F (17°C)	940	445	29.2	8.6	2.34	.79	.94	1.00	28.2	8.3	2.60	.80	.96	1.00	27.0	7.9	2.90	.82	.98	1.00	26.0	7.6	3.22	.84	.99	1.00
	1030	485	29.8	8.7	2.36	.81	.96	1.00	28.6	8.4	2.63	.82	.98	1.00	27.6	8.1	2.92	.84	1.00	1.00	26.4	7.7	3.24	.86	1.00	1.00
	1140	540	30.4	8.9	2.38	.84	.99	1.00	29.4	8.6	2.65	.85	1.00	1.00	28.2	8.3	2.95	.87	1.00	1.00	27.2	8.0	3.28	.89	1.00	1.00
67°F (19°C)	940	445	30.6	9.0	2.40	.63	.77	.91	29.6	8.7	2.66	.63	.78	.92	28.4	8.3	2.96	.64	.80	.95	27.2	8.0	3.29	.65	.81	.97
	1030	485	31.2	9.1	2.42	.64	.79	.93	30.0	8.8	2.68	.65	.80	.96	28.8	8.4	2.98	.66	.82	.97	27.6	8.1	3.31	.67	.84	.99
	1140	540	31.8	9.3	2.44	.65	.82	.97	30.6	9.0	2.71	.67	.83	.99	29.4	8.6	3.00	.68	.85	1.00	28.0	8.2	3.33	.69	.87	1.00
71°F (22°C)	940	445	32.0	9.4	2.45	.47	.61	.75	30.8	9.0	2.72	.48	.62	.76	29.6	8.7	3.02	.48	.63	.77	28.4	8.3	3.35	.49	.64	.79
	1030	485	32.6	9.6	2.47	.48	.63	.77	31.4	9.2	2.74	.49	.64	.78	30.2	8.9	3.05	.49	.65	.80	28.8	8.4	3.38	.49	.66	.82
	1140	540	33.2	9.7	2.50	.49	.65	.80	32.0	9.4	2.77	.50	.66	.81	30.6	9.0	3.08	.50	.67	.83	29.4	8.6	3.41	.51	.68	.85
10ACC-030 — C23-31 WITH G32V-75 COOLING CAPACITY																										
63°F (17°C)	800	380	27.2	8.0	2.27	.74	.87	.98	26.4	7.7	2.53	.75	.88	1.00	25.4	7.4	2.81	.77	.90	1.00	24.2	7.1	3.13	.78	.92	1.00
	1000	470	28.4	8.3	2.31	.78	.93	1.00	27.4	8.0	2.57	.80	.95	1.00	26.4	7.7	2.86	.81	.97	1.00	25.2	7.4	3.18	.83	.99	1.00
	1200	565	29.4	8.6	2.35	.83	.98	1.00	28.4	8.3	2.61	.84	.99	1.00	27.2	8.0	2.90	.86	1.00	1.00	26.2	7.7	3.23	.88	1.00	1.00
67°F (19°C)	800	380	28.6	8.4	2.32	.60	.72	.84	27.6	8.1	2.58	.60	.73	.85	26.6	7.8	2.87	.61	.74	.87	25.4	7.4	3.19	.62	.76	.89
	1000	470	29.8	8.7	2.37	.62	.76	.90	28.8	8.4	2.63	.63	.78	.91	27.6	8.1	2.93	.64	.79	.94	26.6	7.8	3.25	.65	.81	.96
	1200	565	30.8	9.0	2.40	.65	.81	.96	29.8	8.7	2.67	.66	.82	.97	28.6	8.4	2.97	.67	.84	.99	27.4	8.0	3.29	.69	.86	1.00
71°F (22°C)	800	380	29.8	8.7	2.36	.47	.58	.70	28.8	8.4	2.62	.47	.59	.71	27.6	8.1	2.92	.47	.60	.72	26.6	7.8	3.25	.47	.61	.73
	1000	470	31.2	9.1	2.41	.48	.61	.74	30.0	8.8	2.69	.48	.62	.75	29.0	8.5	2.99	.49	.63	.77	27.8	8.1	3.32	.49	.64	.79
	1200	565	32.2	9.4	2.46	.49	.64	.79	31.0	9.1	2.73	.50	.65	.80	29.8	8.7	3.03	.50	.66	.82	28.6	8.4	3.37	.51	.68	.84
10ACC-030 — C23-41 WITH G32V-75 COOLING CAPACITY																										
63°F (17°C)	800	380	27.6	8.1	2.28	.75	.87	.99	26.6	7.8	2.53	.76	.89	1.00	25.6	7.5	2.83	.77	.91	1.00	24.4	7.2	3.14	.78	.93	1.00
	1000	470	28.8	8.4	2.33	.79	.94	1.00	27.8	8.1	2.58	.80	.96	1.00	26.6	7.8	2.88	.82	.97	1.00	25.6	7.5	3.19	.84	.99	1.00
	1200	565	29.8	8.7	2.36	.84	.99	1.00	28.8	8.4	2.62	.85	1.00	1.00	27.6	8.1	2.92	.87	1.00	1.00	26.6	7.8	3.25	.89	1.00	1.00
67°F (19°C)	800	380	28.8	8.4	2.33	.60	.72	.84	27.8	8.1	2.59	.61	.73	.86	26.8	7.9	2.88	.61	.75	.88	25.6	7.5	3.20	.62	.76	.89
	1000	470	30.2	8.9	2.38	.63	.77	.90	29.2	8.6	2.64	.64	.78	.92	28.0	8.2	2.94	.65	.80	.95	26.8	7.9	3.26	.66	.81	.97
	1200	565	31.2	9.1	2.42	.66	.82	.97	30.0	8.8	2.69	.67	.83	.98	28.8	8.4	2.98	.68	.85	1.00	27.6	8.1	3.31	.69	.87	1.00
71°F (22°C)	800	380	30.0	8.8	2.37	.47	.59	.70	29.0	8.5	2.64	.47	.59	.71	28.0	8.2	2.94	.47	.60	.72	26.8	7.9	3.27	.47	.61	.74
	1000	470	31.4	9.2	2.43	.48	.62	.75	30.4	8.9	2.70	.48	.62	.76	29.2	8.6	3.00	.49	.63	.78	28.0	8.2	3.33	.49	.64	.79
	1200	565	32.6	9.6	2.47	.49	.65	.80	31.4	9.2	2.75	.50	.66	.81	30.2	8.9	3.05	.51	.67	.83	29.0	8.5	3.38	.51	.68	.85
10ACC-030 — C26-31 WITH G32V-75 COOLING CAPACITY																										
63°F (17°C)	800	380	28.6	8.4	2.31	.76	.89	1.00	27.4	8.0	2.57	.77	.91	1.00	26.2	7.7	2.86	.78	.93	1.00	25.2	7.4	3.17	.79	.95	1.00
	1000	470	29.6	8.7	2.36	.80	.96	1.00	28.6	8.4	2.62	.82	.97	1.00	27.4	8.0	2.91	.84	.99	1.00	26.4	7.7	3.24	.86	1.00	1.00
	1200	565	30.8	9.0	2.40	.86	1.00	1.00	29.8	8.7	2.67	.88	1.00	1.00	28.8	8.4	2.97	.90	1.00	1.00	27.6	8.1	3.31	.92	1.00	1.00
67°F (19°C)	800	380	30.2	8.9	2.37	.60	.73	.86	29.0	8.5	2.64	.61	.74	.87	27.8	8.1	2.93	.62	.76	.89	26.6	7.8	3.25	.62	.77	.91
	1000	470	31.4	9.2	2.42	.63	.79	.93	30.2	8.9	2.69	.64	.80	.95	29.0	8.5	2.98	.65	.82	.97	27.6	8.1	3.31	.67	.84	.98
	1200	565	32.2	9.4	2.46	.67	.84	.99	31.0	9.1	2.73	.68	.86	1.00	29.8	8.7	3.03	.69	.88	1.00	28.4	8.3	3.35	.71	.90	1.00
71°F (22°C)	800	380	31.6	9.3	2.43	.46	.59	.71	30.4	8.9	2.70	.47	.59	.72	29.2	8.6	3.00	.47	.60	.74	28.0	8.2	3.33	.47	.61	.75
	1000	470	32.8	9.6	2.49	.48	.62	.77	31.6	9.3	2.76	.48	.63	.78	30.4	8.9	3.06	.49	.64	.80	29.0	8.5	3.40	.49	.65	.82
	1200	565	33.8	9.9	2.53	.50	.66	.82	32.6	9.6	2.80	.50	.67	.84	31.2	9.1	3.11	.51	.69	.86	30.0	8.8	3.45	.52	.70	.88
10ACC-030 — C26-41 WITH G32V-75 COOLING CAPACITY																										
63°F (17°C)	800	380	28.8	8.4	2.32	.76	.89	1.00	27.6	8.1	2.58	.77	.92	1.00	26.4	7.7	2.87	.78	.93	1.00	25.2	7.4	3.18	.80	.96	1.00
	1000	470	30.0	8.8	2.37	.81	.97	1.00	28.8	8.4	2.63	.83	.98	1.00	27.8	8.1	2.93	.85	1.00	1.00	26.6	7.8	3.25	.87	1.00	1.00
	1200	565	31.2	9.1	2.42	.88	1.00	1.00	30.2	8.9	2.69	.89	1.00	1.00	29.0	8.5	2.99	.91	1.00	1.00	28.0	8.2	3.33	.94	1.00	1.00
67°F (19°C)	800	380	30.4	8.9	2.38	.60	.74	.86	29.2	8.6	2.65	.61	.75	.88	28.0	8.2	2.94	.62	.76	.90	26.8	7.9	3.26	.63	.78	.92
	1000	470	31.6	9.3	2.43	.64	.79	.94	30.4	8.9	2.70	.65	.81	.96	29.2	8.6	3.00	.66	.83	.98	27.8	8.1	3.32	.67	.85	.99
	1200	565	32.6	9.6	2.47	.68	.85	1.00	31.2	9.1	2.74	.69	.87	1.00	30.0	8.8	3.04	.70	.89	1.00	28.6	8.4	3.36	.72	.92	1.00
71°F (22°C)	800	380	32.0	9.4	2.44	.46		.71	30.6	9.0	2.71	.47	.60	.72	29.4	8.6	3.01	.47	.61	.74	28.2	8.3	3.34	.47	.61	.75
	1000	470	33.2	9.7	2.50	.48	.63	.77	32.0	9.4	2.77	.48	.64	.79	30.6	9.0	3.08	.49	.65	.81	29.2	8.6	3.41	.49	.66	.83
	1200	565	34.2	10.0	2.55	.50	.67	.84	32.8	9.6	2.82	.51	.68	.85	31.4	9.2	3.12	.51	.70	.87	30.2	8.9	3.46	.52	.71	.90

RATINGS

NOTE - For Temperatures and Capacities not shown in tables, see bulletin - Cooling Unit Rating Table Correction Factor Data in Miscellaneous Engineering Data section.

Entering Wet Bulb Temperature	Total Air Volume		Outdoor Air Temperature Entering Outdoor Coil																							
			85°F (29°C)						95°F (35°C)						105°F (41°C)						115°F (46°C)					
			Total Cooling Capacity		Comp Motor kW Input	Sensible To Total Ratio (S/T) Dry Bulb			Total Cooling Capacity		Comp Motor kW Input	Sensible To Total Ratio (S/T) Dry Bulb			Total Cooling Capacity		Comp Motor kW Input	Sensible To Total Ratio (S/T) Dry Bulb			Total Cooling Capacity		Comp Motor kW Input	Sensible To Total Ratio (S/T) Dry Bulb		
	cfm	L/s	kBtuh	kW		75°F 24°C	80°F 27°C	85°F 29°C	kBtuh	kW		75°F 24°C	80°F 27°C	85°F 29°C	kBtuh	kW		75°F 24°C	80°F 27°C	85°F 29°C	kBtuh	kW		75°F 24°C	80°F 27°C	85°F 29°C
10ACC-030 — CR26-30N-F COOLING CAPACITY																										
63°F (17°C)	870	410	28.6	8.4	2.32	.77	.91	1.00	27.6	8.1	2.57	.79	.92	1.00	26.6	7.8	2.87	.80	.94	1.00	25.4	7.4	3.18	.82	.96	1.00
	1070	505	29.8	8.7	2.36	.82	.96	1.00	28.6	8.4	2.62	.84	.98	1.00	27.6	8.1	2.92	.85	.99	1.00	26.4	7.7	3.24	.87	1.00	1.00
	1270	600	30.6	9.0	2.40	.87	1.00	1.00	29.6	8.7	2.66	.88	1.00	1.00	28.4	8.3	2.96	.90	1.00	1.00	27.4	8.0	3.30	.92	1.00	1.00
67°F (19°C)	870	410	30.2	8.9	2.37	.62	.75	.88	29.0	8.5	2.64	.63	.76	.89	27.8	8.1	2.93	.63	.78	.91	26.8	7.9	3.25	.64	.79	.93
	1070	505	31.2	9.1	2.42	.65	.80	.94	30.0	8.8	2.68	.66	.82	.95	28.8	8.4	2.98	.67	.83	.97	27.6	8.1	3.30	.68	.85	.99
	1270	600	32.0	9.4	2.44	.68	.84	.98	30.8	9.0	2.72	.69	.86	.99	29.6	8.7	3.02	.70	.88	1.00	28.2	8.3	3.34	.72	.90	1.00
71°F (22°C)	870	410	31.6	9.3	2.43	.46	.60	.73	30.4	8.9	2.70	.48	.61	.74	29.2	8.6	3.01	.48	.62	.76	28.0	8.2	3.33	.49	.63	.77
	1070	505	32.6	9.6	2.48	.49	.64	.78	31.4	9.2	2.75	.49	.65	.79	30.2	8.9	3.05	.50	.66	.81	29.0	8.5	3.39	.51	.67	.83
	1270	600	33.4	9.8	2.51	.50	.67	.83	32.2	9.4	2.79	.51	.68	.84	31.0	9.1	3.09	.52	.69	.86	29.6	8.7	3.43	.52	.71	.88
10ACC-030 — CR26-36N/W-F COOLING CAPACITY																										
63°F (17°C)	870	410	29.2	8.6	2.34	.78	.92	1.00	28.0	8.2	2.60	.79	.94	1.00	27.0	7.9	2.89	.81	.96	1.00	25.8	7.6	3.21	.82	.98	1.00
	1070	505	30.4	8.9	2.39	.83	.98	1.00	29.2	8.6	2.65	.85	.99	1.00	28.2	8.3	2.94	.86	1.00	1.00	27.0	7.9	3.28	.88	1.00	1.00
	1270	600	31.4	9.2	2.43	.88	1.00	1.00	30.4	8.9	2.70	.90	1.00	1.00	29.2	8.6	3.00	.92	1.00	1.00	28.2	8.3	3.34	.94	1.00	1.00
67°F (19°C)	870	410	30.6	9.0	2.40	.62	.75	.89	29.6	8.7	2.66	.63	.77	.91	28.4	8.3	2.96	.64	.78	.92	27.2	8.0	3.28	.65	.80	.95
	1070	505	31.8	9.3	2.44	.65	.81	.95	30.6	9.0	2.71	.66	.83	.97	29.4	8.6	3.01	.67	.84	.99	28.2	8.3	3.34	.69	.86	1.00
	1270	600	32.6	9.6	2.48	.69	.86	1.00	31.4	9.2	2.75	.70	.88	1.00	30.2	8.9	3.05	.71	.90	1.00	28.8	8.4	3.38	.73	.92	1.00
71°F (22°C)	870	410	32.2	9.4	2.46	.47	.60	.73	31.0	9.1	2.73	.48	.61	.75	29.8	8.7	3.03	.48	.62	.76	28.6	8.4	3.37	.49	.63	.78
	1070	505	33.4	9.8	2.51	.49	.64	.79	32.2	9.4	2.78	.50	.65	.81	30.8	9.0	3.09	.50	.67	.82	29.6	8.7	3.42	.51	.68	.84
	1270	600	34.2	10.0	2.55	.51	.68	.84	32.8	9.6	2.82	.51	.69	.86	31.6	9.3	3.13	.52	.70	.88	30.2	8.9	3.46	.53	.72	.90
10ACC-030 — CR26-30N-F WITH GHR32V3-75 COOLING CAPACITY																										
63°F (17°C)	810	380	28.2	8.3	2.30	.75	.88	.99	27.0	7.9	2.56	.76	.90	1.00	26.0	7.6	2.85	.78	.92	1.00	25.0	7.3	3.16	.79	.94	1.00
	1010	475	29.4	8.6	2.35	.80	.94	1.00	28.4	8.3	2.61	.82	.96	1.00	27.2	8.0	2.90	.83	.98	1.00	26.0	7.6	3.22	.85	.99	1.00
	1190	560	30.2	8.9	2.38	.84	.99	1.00	29.2	8.6	2.64	.86	1.00	1.00	28.0	8.2	2.94	.88	1.00	1.00	27.0	7.9	3.27	.90	1.00	1.00
67°F (19°C)	810	380	29.6	8.7	2.36	.60	.73	.85	28.6	8.4	2.62	.61	.74	.87	27.4	8.0	2.91	.62	.75	.89	26.2	7.7	3.23	.62	.77	.90
	1010	475	30.8	9.0	2.40	.63	.78	.92	29.6	8.7	2.67	.64	.79	.93	28.6	8.4	2.96	.65	.81	.95	27.2	8.0	3.29	.66	.83	.97
	1190	560	31.6	9.3	2.43	.66	.83	.96	30.4	8.9	2.70	.67	.84	.98	29.2	8.6	3.00	.68	.86	.99	28.0	8.2	3.33	.70	.88	1.00
71°F (22°C)	810	380	31.0	9.1	2.41	.46	.59	.71	30.0	8.8	2.68	.47	.59	.72	28.8	8.4	2.98	.47	.60	.73	27.6	8.1	3.31	.47	.61	.75
	1010	475	32.4	9.5	2.46	.47	.62	.76	31.2	9.1	2.74	.48	.63	.77	30.0	8.8	3.04	.49	.64	.79	28.6	8.4	3.37	.49	.65	.81
	1190	560	33.2	9.7	2.50	.50	.65	.81	32.0	9.4	2.77	.50	.66	.82	30.6	9.0	3.08	.51	.68	.84	29.4	8.6	3.41	.51	.69	.86
10ACC-030 — CR26-36N/W-F WITH GHR32V3-75 COOLING CAPACITY																										
63°F (17°C)	810	380	28.6	8.4	2.32	.75	.89	1.00	27.6	8.1	2.58	.77	.91	1.00	26.4	7.7	2.87	.78	.93	1.00	25.4	7.4	3.18	.80	.95	1.00
	1010	475	30.0	8.8	2.37	.81	.96	1.00	29.0	8.5	2.63	.82	.98	1.00	27.6	8.1	2.93	.84	.99	1.00	26.6	7.8	3.25	.86	1.00	1.00
	1190	560	31.0	9.1	2.41	.86	1.00	1.00	29.8	8.7	2.67	.87	1.00	1.00	28.8	8.4	2.98	.89	1.00	1.00	27.6	8.1	3.31	.91	1.00	1.00
67°F (19°C)	810	380	30.2	8.9	2.38	.60	.73	.86	29.2	8.6	2.64	.61	.74	.88	28.0	8.2	2.94	.61	.76	.89	26.8	7.9	3.26	.62	.77	.91
	1010	475	31.6	9.3	2.43	.64	.79	.93	30.4	8.9	2.69	.65	.80	.95	29.0	8.5	2.99	.66	.82	.97	27.8	8.1	3.32	.67	.84	.99
	1190	560	32.2	9.4	2.46	.67	.84	.98	31.0	9.1	2.73	.68	.85	1.00	29.8	8.7	3.03	.69	.87	1.00	28.6	8.4	3.36	.71	.89	1.00
71°F (22°C)	810	380	31.8	9.3	2.43	.46	.58	.71	30.6	9.0	2.71	.47	.59	.72	29.4	8.6	3.01	.47	.60	.73	28.2	8.3	3.34	.47	.61	.75
	1010	475	33.0	9.7	2.49	.48	.62	.77	31.8	9.3	2.77	.48	.64	.78	30.6	9.0	3.07	.49	.65	.80	29.2	8.6	3.40	.49	.66	.82
	1190	560	33.8	9.9	2.53	.50	.66	.82	32.6	9.6	2.81	.50	.67	.83	31.4	9.2	3.11	.51	.68	.85	30.0	8.8	3.45	.51	.70	.87
10ACC-030 — CH33-24/30A-2F COOLING CAPACITY																										
63°F (17°C)	800	380	28.0	8.2	2.29	.75	.88	.99	27.0	7.9	2.55	.76	.90	1.00	25.8	7.6	2.84	.78	.91	1.00	24.8	7.3	3.16	.79	.94	1.00
	1000	470	29.2	8.6	2.34	.80	.94	1.00	28.0	8.2	2.60	.81	.96	1.00	27.0	7.9	2.89	.83	.98	1.00	26.0	7.6	3.21	.84	1.00	1.00
	1200	565	30.2	8.9	2.37	.84	.99	1.00	29.0	8.5	2.64	.86	1.00	1.00	28.0	8.2	2.94	.87	1.00	1.00	27.0	7.9	3.27	.90	1.00	1.00
67°F (19°C)	800	380	29.2	8.6	2.34	.61	.73	.85	28.2	8.3	2.61	.61	.74	.86	27.2	8.0	2.90	.62	.75	.88	26.0	7.6	3.22	.63	.77	.90
	1000	470	30.6	9.0	2.39	.63	.77	.91	29.4	8.6	2.66	.64	.79	.93	28.4	8.3	2.95	.65	.80	.95	27.2	8.0	3.28	.66	.82	.98
	1200	565	31.4	9.2	2.43	.66	.82	.97	30.4	8.9	2.70	.67	.84	.98	29.0	8.5	2.99	.68	.85	1.00	27.8	8.1	3.32	.69	.88	1.00
71°F (22°C)	800	380	30.4	8.9	2.39	.48	.59	.71	29.4	8.6	2.66	.48	.60	.72	28.4	8.3	2.95	.48	.61	.73	27.2	8.0	3.29	.48	.61	.75
	1000	470	31.8	9.3	2.45	.49	.62	.75	30.8	9.0	2.72	.49	.63	.77	29.6	8.7	3.02	.50	.64	.78	28.4	8.3	3.35	.50	.65	.80
	1200	565	32.8	9.6	2.49	.50	.65	.80	31.6	9.3	2.76	.51	.66	.82	30.4	8.9	3.07	.51	.67	.83	29.2	8.6	3.40	.52	.69	.85
10ACC-030 — CH33-36C-2F COOLING CAPACITY																										
63°F (17°C)	870	410	28.8	8.4	2.32	.78	.91	1.00	27.8	8.1	2.58	.79	.93	1.00	26.6	7.8	2.87	.80	.95	1.00	25.4	7.4	3.19	.82	.98	1.00
	1070	505	30.0	8.8	2.37	.82	.98	1.00	29.0	8.5	2.63	.84	.99	1.00	27.8	8.1	2.93	.86	1.00	1.00	26.8	7.9	3.26	.88	1.00	1.00
	1270	600	31.0	9.1	2.41	.87	1.00	1.00	30.0	8.8	2.68	.89	1.00	1.00	28.8	8.4	2.99	.91	1.00	1.00	27.8	8.1	3.32	.93	1.00	1.00
67°F (19°C)	870	410	30.2	8.9	2.38	.62	.75	.88	29.2	8.6	2.64	.63	.77	.90	28.0	8.2	2.94	.64	.78	.92	26.8	7.9	3.26	.65	.80	.94
	1070	505	31.4	9.2	2.43	.65	.80	.95	30.2	8.9	2.69	.66	.82	.97	29.0	8.5	2.99	.67	.84	.99	27.8	8.1	3.32	.68	.86	1.00
	1270	600	32.2	9.4	2.46	.68	.85	1.00	31.0	9.1	2.73	.69	.87	1.00	29.8	8.7	3.03	.70	.89	1.00	28.4	8.3	3.35	.72	.91	1.00
71°F (22°C)	870	410	31.4	9.2	2.43	.48	.61	.73	30.4	8.9	2.70	.48	.62	.75	29.2	8.6	3.00	.49	.63	.76	28.0	8.2	3.33	.49	.64	.78
	1070	505	32.8	9.6	2.48	.49	.64	.78	31.6	9.3	2.75	.50	.65	.80	30.4	8.9	3.06	.50	.66	.81	29.0	8.5	3.39	.51	.67	.83
	1270	600	33.6	9.8	2.52	.51	.67	.83	32.4	9.5	2.80	.51	.68	.85	31.2	9.1	3.11	.52	.70	.87	29.8	8.7	3.44	.53	.71	.89
10ACC-030 — CH33-36A-2F COOLING CAPACITY																										
63°F (17°C)	870	410	28.8	8.4	2.32	.76	.90	1.00	27.6	8.1	2.58	.78	.92	1.00	26.6	7.8	2.87	.79	.94	1.00	25.4	7.4	3.18	.81	.96	1.00
	1070	505	29.8	8.7	2.36	.81	.97	1.00	28.8	8.4	2.62	.83	.98	1.00	27.4	8.0	2.91	.85	1.00	1.00	26.4	7.7	3.24	.87	1.00	1.00
	1270	600	30.6	9.0	2.40	.86	1.00	1.00	29.6	8.7	2.67	.87	1.00	1.00	28.6	8.4	2.97	.90	1.00	1.00	27.4	8.0	3.30	.92	1.00	1.00
67°F (19°C)	870	410	30.4	8.9	2.38	.61	.74	.87	29.2	8.6	2.65	.62	.76	.89	28.0	8.2	2.94	.63	.77	.91	26.8	7.9	3.27	.64	.78	.93
	1070	505	31.4	9.2	2.43	.64	.79	.94	30.2	8.9	2.69	.65	.80	.96	29.0	8.5	2.99	.66	.82	.98	27.8	8.1	3.32	.67	.84	1.00
	1270	600	32.2	9.4	2.46	.67	.84	.99	31.0	9.1	2.73	.68	.85	1.00	29.8	8.7	3.03	.69	.87	1.00	28.4	8.3	3.35	.71	.90	1.00
71°F (22°C)	870	410	31.8	9.3	2.45	.47	.60	.72	30.8	9.0	2.72	.48	.61	.73	29.6	8.7	3.02	.48	.61	.75	28.4	8.3	3.35	.48	.62	.76
	1070	505	33.0	9.7	2.50	.49	.63	.77	31.8	9.3	2.77	.49	.64	.78	30.6	9.0	3.07	.49	.65	.80	29.2	8.6	3.41	.50	.66	.82
	1270	600	33.8	9.9	2.53	.50	.66	.82	32.6	9.6	2.81	.51	.67	.83	31.2	9.1	3.11	.51	.68	.85	30.0	8.8	3.45	.52	.70	.87

RATINGS

NOTE - For Temperatures and Capacities not shown in tables, see bulletin - Cooling Unit Rating Table Correction Factor Data in Miscellaneous Engineering Data section.

Entering Wet Bulb Temperature	Total Air Volume		Outdoor Air Temperature Entering Outdoor Coil																							
			85°F (29°C)						95°F (35°C)						105°F (41°C)						115°F (46°C)					
			Total Cooling Capacity		Comp Motor kW Input	Sensible To Total Ratio (S/T) Dry Bulb			Total Cooling Capacity		Comp Motor kW Input	Sensible To Total Ratio (S/T) Dry Bulb			Total Cooling Capacity		Comp Motor kW Input	Sensible To Total Ratio (S/T) Dry Bulb			Total Cooling Capacity		Comp Motor kW Input	Sensible To Total Ratio (S/T) Dry Bulb		
	cfm	L/s	kBtuh	kW		75°F 24°C	80°F 27°C	85°F 29°C	kBtuh	kW		75°F 24°C	80°F 27°C	85°F 29°C	kBtuh	kW		75°F 24°C	80°F 27°C	85°F 29°C	kBtuh	kW		75°F 24°C	80°F 27°C	85°F 29°C
10ACC-030 — CH33-36B-2F COOLING CAPACITY																										
63°F (17°C)	870	410	29.0	8.5	2.33	.78	.91	1.00	27.8	8.1	2.59	.79	.93	1.00	26.8	7.9	2.88	.80	.95	1.00	25.6	7.5	3.20	.82	.98	1.00
	1070	505	30.2	8.9	2.38	.82	.98	1.00	29.0	8.5	2.64	.84	.99	1.00	28.0	8.2	2.93	.86	1.00	1.00	26.8	7.9	3.26	.88	1.00	1.00
	1270	600	31.2	9.1	2.42	.87	1.00	1.00	30.2	8.9	2.69	.89	1.00	1.00	29.0	8.5	2.99	.91	1.00	1.00	28.0	8.2	3.32	.94	1.00	1.00
67°F (19°C)	870	410	30.4	8.9	2.38	.62	.75	.88	29.2	8.6	2.65	.63	.77	.90	28.0	8.2	2.94	.64	.78	.92	26.8	7.9	3.27	.65	.80	.94
	1070	505	31.4	9.2	2.43	.65	.80	.95	30.4	8.9	2.70	.66	.82	.97	29.2	8.6	3.00	.67	.84	.99	27.8	8.1	3.32	.69	.86	1.00
	1270	600	32.4	9.5	2.46	.68	.85	1.00	31.2	9.1	2.73	.69	.87	1.00	29.8	8.7	3.03	.71	.89	1.00	28.4	8.3	3.36	.72	.92	1.00
71°F (22°C)	870	410	31.6	9.3	2.43	.48	.61	.73	30.4	8.9	2.70	.48	.62	.74	29.4	8.6	3.01	.49	.63	.76	28.0	8.2	3.34	.49	.64	.78
	1070	505	32.8	9.6	2.49	.50	.64	.78	31.6	9.3	2.76	.50	.65	.80	30.4	8.9	3.07	.50	.66	.82	29.2	8.6	3.40	.51	.67	.84
	1270	600	33.8	9.9	2.53	.51	.67	.83	32.6	9.6	2.80	.51	.68	.85	31.2	9.1	3.11	.52	.70	.87	30.0	8.8	3.45	.53	.71	.89
10ACC-030 — CH23-41 COOLING CAPACITY																										
63°F (17°C)	870	410	29.0	8.5	2.33	.76	.89	1.00	28.0	8.2	2.59	.77	.91	1.00	26.8	7.9	2.88	.79	.93	1.00	25.6	7.5	3.20	.80	.95	1.00
	1070	505	30.2	8.9	2.37	.80	.96	1.00	29.0	8.5	2.64	.82	.97	1.00	28.0	8.2	2.94	.84	.99	1.00	26.8	7.9	3.27	.86	1.00	1.00
	1270	600	31.2	9.1	2.42	.85	1.00	1.00	30.2	8.9	2.69	.87	1.00	1.00	29.2	8.6	3.00	.89	1.00	1.00	28.2	8.3	3.34	.91	1.00	1.00
67°F (19°C)	870	410	30.6	9.0	2.40	.61	.74	.86	29.6	8.7	2.66	.62	.75	.88	28.4	8.3	2.96	.62	.76	.90	27.2	8.0	3.29	.63	.78	.92
	1070	505	31.8	9.3	2.44	.64	.78	.93	30.6	9.0	2.71	.65	.80	.95	29.4	8.6	3.01	.66	.82	.97	28.2	8.3	3.34	.67	.83	.99
	1270	600	32.6	9.6	2.48	.66	.83	.98	31.4	9.2	2.75	.67	.85	.99	30.2	8.9	3.05	.69	.87	1.00	28.8	8.4	3.38	.70	.89	1.00
71°F (22°C)	870	410	32.4	9.5	2.46	.47	.60	.72	31.2	9.1	2.73	.48	.60	.73	30.0	8.8	3.04	.48	.61	.74	28.8	8.4	3.37	.48	.62	.76
	1070	505	33.6	9.8	2.51	.49	.63	.76	32.2	9.4	2.79	.49	.64	.78	31.0	9.1	3.10	.49	.65	.79	29.8	8.7	3.44	.50	.66	.82
	1270	600	34.4	10.1	2.55	.50	.65	.81	33.2	9.7	2.83	.50	.66	.83	31.8	9.3	3.14	.51	.68	.85	30.6	9.0	3.49	.52	.69	.87
10ACC-030 — CH33-24/30A-2F WITH G60UHV-36A-070 COOLING CAPACITY																										
63°F (17°C)	860	405	28.2	8.3	2.30	.76	.89	1.00	27.2	8.0	2.56	.77	.91	1.00	26.2	7.7	2.85	.78	.93	1.00	25.0	7.3	3.17	.80	.95	1.00
	1000	470	29.0	8.5	2.34	.79	.94	1.00	28.0	8.2	2.59	.81	.96	1.00	27.0	7.9	2.89	.82	.98	1.00	25.8	7.6	3.21	.84	1.00	1.00
	1110	525	29.6	8.7	2.36	.81	.97	1.00	28.6	8.4	2.62	.83	.98	1.00	27.4	8.0	2.91	.84	1.00	1.00	26.4	7.7	3.24	.86	1.00	1.00
67°F (19°C)	860	405	29.6	8.7	2.35	.61	.74	.86	28.6	8.4	2.62	.61	.75	.88	27.4	8.0	2.92	.62	.76	.90	26.4	7.7	3.24	.63	.78	.92
	1000	470	30.4	8.9	2.39	.63	.77	.91	29.4	8.6	2.66	.64	.78	.93	28.2	8.3	2.95	.65	.80	.95	27.0	7.9	3.28	.66	.82	.97
	1110	525	31.0	9.1	2.41	.64	.79	.94	29.8	8.7	2.67	.65	.81	.96	28.8	8.4	2.98	.66	.82	.98	27.4	8.0	3.30	.67	.84	.99
71°F (22°C)	860	405	30.8	9.0	2.41	.47	.59	.71	29.8	8.7	2.67	.47	.60	.73	28.6	8.4	2.98	.47	.61	.74	27.6	8.1	3.30	.48	.62	.75
	1000	470	31.8	9.3	2.44	.48	.62	.75	30.6	9.0	2.72	.49	.63	.76	29.6	8.7	3.02	.49	.64	.78	28.4	8.3	3.35	.49	.65	.79
	1110	525	32.4	9.5	2.46	.49	.63	.77	31.2	9.1	2.74	.49	.64	.79	30.0	8.8	3.04	.49	.65	.80	28.8	8.4	3.37	.50	.66	.82
10ACC-030 — CH33-36A-2F WITH G60UHV-36A-070 COOLING CAPACITY																										
63°F (17°C)	860	405	28.6	8.4	2.32	.76	.89	1.00	27.4	8.0	2.57	.77	.91	1.00	26.4	7.7	2.86	.78	.93	1.00	25.2	7.4	3.17	.80	.95	1.00
	1000	470	29.4	8.6	2.35	.79	.94	1.00	28.2	8.3	2.61	.80	.96	1.00	27.0	7.9	2.89	.82	.98	1.00	26.0	7.6	3.21	.84	1.00	1.00
	1110	525	30.0	8.8	2.37	.81	.97	1.00	28.8	8.4	2.63	.83	.99	1.00	27.6	8.1	2.92	.85	1.00	1.00	26.4	7.7	3.24	.87	1.00	1.00
67°F (19°C)	860	405	30.2	8.9	2.38	.60	.73	.86	29.2	8.6	2.64	.61	.75	.88	28.0	8.2	2.94	.62	.76	.90	26.6	7.8	3.26	.63	.77	.92
	1000	470	31.0	9.1	2.41	.63	.77	.91	29.8	8.7	2.68	.63	.78	.93	28.6	8.4	2.97	.64	.80	.95	27.4	8.0	3.30	.65	.82	.97
	1110	525	31.6	9.3	2.43	.64	.79	.94	30.4	8.9	2.70	.65	.81	.96	29.0	8.5	2.99	.66	.83	.98	27.8	8.1	3.32	.67	.84	1.00
71°F (22°C)	860	405	31.8	9.3	2.44	.47	.59	.71	30.6	9.0	2.71	.47	.60	.72	29.4	8.6	3.01	.47	.61	.74	28.2	8.3	3.34	.48	.61	.75
	1000	470	32.6	9.6	2.48	.48	.61	.75	31.4	9.2	2.75	.48	.62	.76	30.2	8.9	3.05	.48	.63	.78	29.0	8.5	3.38	.49	.64	.79
	1110	525	33.2	9.7	2.50	.48	.63	.77	31.8	9.3	2.77	.49	.64	.79	30.6	9.0	3.08	.49	.65	.80	29.4	8.6	3.41	.50	.66	.82
10ACC-030 — CH33-36C-2F WITH G60UHV-36B-090 COOLING CAPACITY																										
63°F (17°C)	940	445	29.2	8.6	2.34	.79	.93	1.00	28.0	8.2	2.59	.80	.95	1.00	27.0	7.9	2.89	.81	.97	1.00	25.8	7.6	3.21	.83	.99	1.00
	1030	485	29.6	8.7	2.35	.80	.96	1.00	28.6	8.4	2.62	.82	.98	1.00	27.4	8.0	2.91	.84	.99	1.00	26.2	7.7	3.23	.85	1.00	1.00
	1140	540	30.2	8.9	2.38	.83	.99	1.00	29.2	8.6	2.64	.85	1.00	1.00	28.0	8.2	2.94	.87	1.00	1.00	27.0	7.9	3.27	.89	1.00	1.00
67°F (19°C)	940	445	30.6	9.0	2.39	.62	.76	.90	29.4	8.6	2.66	.63	.78	.92	28.2	8.3	2.95	.64	.79	.94	27.2	8.0	3.28	.65	.81	.96
	1030	485	31.0	9.1	2.41	.64	.78	.93	30.0	8.8	2.68	.64	.80	.95	28.8	8.4	2.98	.65	.81	.97	27.4	8.0	3.30	.67	.83	.99
	1140	540	31.6	9.3	2.43	.65	.81	.96	30.4	8.9	2.70	.66	.83	.98	29.2	8.6	3.00	.67	.85	1.00	28.0	8.2	3.33	.69	.87	1.00
71°F (22°C)	940	445	31.8	9.3	2.45	.48	.61	.74	30.8	9.0	2.72	.48	.62	.76	29.6	8.7	3.02	.48	.63	.77	28.4	8.3	3.35	.49	.64	.79
	1030	485	32.4	9.5	2.47	.49	.62	.76	31.2	9.1	2.74	.49	.63	.78	30.0	8.8	3.04	.49	.64	.79	28.8	8.4	3.38	.49	.66	.81
	1140	540	33.0	9.7	2.49	.49	.64	.79	31.8	9.3	2.77	.49	.65	.81	30.6	9.0	3.07	.50	.66	.83	29.2	8.6	3.40	.51	.68	.84
10ACC-030 — CH33-36B-2F WITH G60HUV-36B-090 COOLING CAPACITY																										
63°F (17°C)	940	445	29.2	8.6	2.34	.79	.93	1.00	28.2	8.3	2.60	.80	.95	1.00	27.0	7.9	2.89	.81	.97	1.00	26.0	7.6	3.21	.83	.99	1.00
	1030	485	29.8	8.7	2.36	.81	.96	1.00	28.6	8.4	2.62	.82	.98	1.00	27.6	8.1	2.91	.84	1.00	1.00	26.4	7.7	3.24	.86	1.00	1.00
	1140	540	30.4	8.9	2.38	.83	.99	1.00	29.2	8.6	2.65	.85	1.00	1.00	28.2	8.3	2.95	.87	1.00	1.00	27.2	8.0	3.28	.89	1.00	1.00
67°F (19°C)	940	445	30.6	9.0	2.40	.62	.76	.90	29.6	8.7	2.66	.63	.78	.92	28.4	8.3	2.96	.64	.79	.94	27.2	8.0	3.28	.65	.81	.97
	1030	485	31.2	9.1	2.41	.64	.79	.93	30.0	8.8	2.68	.65	.80	.95	28.8	8.4	2.98	.65	.81	.97	27.6	8.1	3.31	.67	.83	.99
	1140	540	31.8	9.3	2.44	.65	.81	.97	30.6	9.0	2.71	.66	.83	.98	29.4	8.6	3.00	.67	.85	1.00	28.0	8.2	3.33	.69	.87	1.00
71°F (22°C)	940	445	32.0	9.4	2.45	.48	.61	.74	30.8	9.0	2.72	.48	.62	.76	29.6	8.7	3.02	.48	.63	.77	28.4	8.3	3.35	.49	.64	.79
	1030	485	32.6	9.6	2.47	.49	.63	.76	31.4	9.2	2.74	.49	.63	.78	30.2	8.9	3.05	.49	.64	.79	28.8	8.4	3.38	.49	.66	.81
	1140	540	33.2	9.7	2.50	.49	.64	.79	32.0	9.4	2.77	.50	.65	.81	30.6	9.0	3.08	.50	.67	.83	29.4	8.6	3.41	.51	.68	.85
10ACC-030 — CH23-31 WITH GHR32V3-75 COOLING CAPACITY																										
63°F (17°C)	810	380	26.6	7.8	2.25	.74	.86	.97	25.8	7.6	2.51	.75	.87	.99	24.8	7.3	2.79	.76	.89	1.00	23.8	7.0	3.11	.77	.91	1.00
	1010	475	28.0	8.2	2.29	.78	.91	1.00	27.0	7.9	2.55	.79	.93	1.00	26.0	7.6	2.84	.81	.96	1.00	25.0	7.3	3.16	.82	.98	1.00
	1190	560	28.8	8.4	2.33	.81	.96	1.00	28.0	8.2	2.59	.83	.98	1.00	27.0	7.9	2.89	.85	.99	1.00	26.0	7.6	3.22	.87	1.00	1.00
67°F (19°C)	810	380	28.2	8.3	2.31	.60	.71	.83	27.4	8.0	2.57	.61	.73	.84	26.4	7.7	2.86	.61	.74	.86	25.2	7.4	3.18	.62	.75	.88
	1010	475	29.6	8.7	2.35	.62	.75	.88	28.6	8.4	2.62	.63	.77	.90	27.4	8.0	2.92	.64	.78	.93	26.4	7.7	3.24	.65	.80	.95
	1190	560	30.4	8.9	2.39	.65	.79	.93	29.4	8.6	2.65	.65	.81	.96	28.2	8.3	2.95	.67	.82	.97	27.0	7.9	3.28	.68	.85	.99
71°F (22°C)	810	380	29.6	8.7	2.36	.47	.59	.69	28.6	8.4	2.63	.47	.59	.70	27.6	8.1	2.92	.47	.60	.72	26.6	7.8	3.25	.47	.61	.73
	1010	475	31.2	9.1	2.42	.48	.61	.73	30.2	8.9	2.69	.48	.62	.75	29.0	8.5	2.99	.49	.63	.76	27.8	8.1	3.32	.49	.64	.78
	1190	560	32.2	9.4	2.46	.49	.64	.77	31.0	9.1	2.73	.50	.64	.79	29.8	8.7	3.04	.50	.66	.80	28.6	8.4	3.37	.50	.67	.82

RATINGS

NOTE - For Temperatures and Capacities not shown in tables, see bulletin - Cooling Unit Rating Table Correction Factor Data in Miscellaneous Engineering Data section.

Entering Wet Bulb Temperature	Total Air Volume		Outdoor Air Temperature Entering Outdoor Coil																							
			85°F (29°C)						95°F (35°C)						105°F (41°C)						115°F (46°C)					
			Total Cooling Capacity		Comp Motor kW Input	Sensible To Total Ratio (S/T) Dry Bulb			Total Cooling Capacity		Comp Motor kW Input	Sensible To Total Ratio (S/T) Dry Bulb			Total Cooling Capacity		Comp Motor kW Input	Sensible To Total Ratio (S/T) Dry Bulb			Total Cooling Capacity		Comp Motor kW Input	Sensible To Total Ratio (S/T) Dry Bulb		
	cfm	L/s	kBtuh	kW		75°F 24°C	80°F 27°C	85°F 29°C	kBtuh	kW		75°F 24°C	80°F 27°C	85°F 29°C	kBtuh	kW		75°F 24°C	80°F 27°C	85°F 29°C	kBtuh	kW		75°F 24°C	80°F 27°C	85°F 29°C
10ACC-030 — CH23-41 WITH GHR32V3-75 COOLING CAPACITY																										
63°F (17°C)	810	380	28.4	8.3	2.31	.74	.87	.99	27.4	8.0	2.57	.75	.89	1.00	26.4	7.7	2.86	.76	.90	1.00	25.2	7.4	3.18	.78	.92	1.00
	1010	475	29.8	8.7	2.36	.79	.93	1.00	28.6	8.4	2.62	.80	.95	1.00	27.4	8.0	2.91	.82	.97	1.00	26.4	7.7	3.24	.84	.99	1.00
	1190	560	30.8	9.0	2.40	.83	.98	1.00	29.6	8.7	2.67	.85	1.00	1.00	28.6	8.4	2.97	.86	1.00	1.00	27.6	8.1	3.31	.89	1.00	1.00
67°F (19°C)	810	380	30.2	8.9	2.38	.59	.72	.84	29.0	8.5	2.64	.60	.73	.85	28.0	8.2	2.93	.61	.74	.87	26.8	7.9	3.26	.62	.76	.89
	1010	475	31.6	9.3	2.43	.62	.76	.90	30.4	8.9	2.70	.63	.78	.92	29.2	8.6	3.00	.64	.80	.94	27.8	8.1	3.32	.65	.81	.96
	1190	560	32.4	9.5	2.46	.65	.81	.96	31.2	9.1	2.74	.66	.82	.98	29.8	8.7	3.03	.67	.84	.99	28.6	8.4	3.37	.69	.87	1.00
71°F (22°C)	810	380	31.8	9.3	2.44	.46	.58	.70	30.6	9.0	2.71	.46	.59	.71	29.4	8.6	3.01	.46	.59	.72	28.2	8.3	3.34	.47	.60	.73
	1010	475	33.2	9.7	2.50	.48	.61	.74	32.0	9.4	2.77	.48	.62	.76	30.8	9.0	3.08	.48	.63	.77	29.4	8.6	3.42	.49	.64	.79
	1190	560	34.0	10.0	2.54	.49	.64	.78	32.8	9.6	2.82	.49	.65	.80	31.6	9.3	3.13	.50	.66	.82	30.2	8.9	3.46	.50	.67	.85
10ACC-030 — CB29M-41 - CB28UH-036 COOLING CAPACITY																										
63°F (17°C)	800	380	27.8	8.1	2.29	.76	.89	.99	26.8	7.9	2.54	.77	.90	1.00	25.8	7.6	2.83	.78	.92	1.00	24.6	7.2	3.15	.80	.94	1.00
	1000	470	29.2	8.6	2.34	.80	.94	1.00	28.2	8.3	2.60	.82	.96	1.00	27.0	7.9	2.89	.84	.98	1.00	26.0	7.6	3.22	.85	1.00	1.00
	1200	565	30.2	8.9	2.38	.85	.99	1.00	29.2	8.6	2.65	.87	1.00	1.00	28.2	8.3	2.94	.89	1.00	1.00	27.0	7.9	3.28	.91	1.00	1.00
67°F (19°C)	800	380	29.0	8.5	2.34	.61	.74	.86	28.2	8.3	2.60	.62	.75	.87	27.0	7.9	2.89	.63	.76	.89	25.8	7.6	3.21	.64	.78	.91
	1000	470	30.4	8.9	2.39	.64	.78	.92	29.4	8.6	2.65	.65	.80	.93	28.2	8.3	2.95	.66	.81	.95	27.0	7.9	3.27	.67	.83	.97
	1200	565	31.4	9.2	2.42	.67	.83	.97	30.2	8.9	2.69	.68	.85	.99	29.0	8.5	2.99	.69	.87	1.00	27.8	8.1	3.32	.71	.89	1.00
71°F (22°C)	800	380	30.4	8.9	2.39	.48	.60	.71	29.4	8.6	2.65	.48	.60	.73	28.4	8.3	2.95	.48	.61	.74	27.2	8.0	3.28	.49	.62	.75
	1000	470	31.8	9.3	2.45	.49	.63	.76	30.8	9.0	2.72	.49	.64	.78	29.6	8.7	3.02	.50	.65	.79	28.4	8.3	3.35	.50	.66	.81
	1200	565	32.8	9.6	2.49	.50	.66	.81	31.6	9.3	2.76	.51	.67	.83	30.4	8.9	3.06	.52	.68	.85	29.2	8.6	3.40	.52	.70	.87
10ACC-030 — CB30M-21/26 - CB30U-21/26 COOLING CAPACITY																										
63°F (17°C)	800	380	28.4	8.3	2.31	.76	.89	1.00	27.4	8.0	2.57	.77	.91	1.00	26.2	7.7	2.86	.78	.93	1.00	25.0	7.3	3.17	.80	.95	1.00
	1000	470	29.6	8.7	2.36	.81	.96	1.00	28.6	8.4	2.62	.82	.97	1.00	27.4	8.0	2.91	.84	.99	1.00	26.2	7.7	3.23	.86	1.00	1.00
	1100	520	30.2	8.9	2.38	.83	.98	1.00	29.2	8.6	2.64	.85	.99	1.00	28.0	8.2	2.94	.87	1.00	1.00	26.8	7.9	3.26	.89	1.00	1.00
67°F (19°C)	800	380	30.0	8.8	2.37	.60	.73	.86	28.8	8.4	2.63	.61	.74	.88	27.8	8.1	2.93	.62	.76	.90	26.6	7.8	3.25	.63	.77	.92
	1000	470	31.2	9.1	2.42	.63	.79	.93	30.0	8.8	2.68	.64	.80	.95	28.8	8.4	2.98	.66	.82	.97	27.6	8.1	3.31	.67	.84	.98
	1100	520	31.6	9.3	2.43	.65	.81	.96	30.4	8.9	2.70	.66	.83	.98	29.2	8.6	3.00	.67	.85	.99	28.0	8.2	3.33	.69	.87	1.00
71°F (22°C)	800	380	31.4	9.2	2.43	.47	.59	.71	30.4	8.9	2.70	.47	.60	.72	29.2	8.6	3.00	.47	.61	.74	28.0	8.2	3.33	.48	.61	.75
	1000	470	32.8	9.6	2.48	.48	.62	.77	31.6	9.3	2.75	.49	.63	.78	30.2	8.9	3.06	.49	.64	.79	29.0	8.5	3.39	.50	.66	.81
	1100	520	33.2	9.7	2.50	.49	.64	.79	32.0	9.4	2.78	.50	.65	.81	30.8	9.0	3.08	.50	.66	.83	29.4	8.6	3.42	.51	.68	.85
10ACC-030 — CB30M-31 - CB30U-31 COOLING CAPACITY																										
63°F (17°C)	800	380	28.6	8.4	2.32	.76	.89	1.00	27.6	8.1	2.58	.77	.92	1.00	26.4	7.7	2.86	.78	.93	1.00	25.2	7.4	3.18	.80	.96	1.00
	1000	470	30.0	8.8	2.36	.81	.97	1.00	28.8	8.4	2.63	.83	.98	1.00	27.6	8.1	2.92	.85	1.00	1.00	26.4	7.7	3.24	.87	1.00	1.00
	1200	565	31.0	9.1	2.41	.87	1.00	1.00	30.0	8.8	2.68	.89	1.00	1.00	28.8	8.4	2.98	.91	1.00	1.00	27.8	8.1	3.31	.93	1.00	1.00
67°F (19°C)	800	380	30.2	8.9	2.38	.61	.74	.87	29.0	8.5	2.64	.61	.75	.88	28.0	8.2	2.94	.62	.76	.90	26.8	7.9	3.26	.63	.78	.92
	1000	470	31.6	9.3	2.43	.64	.79	.94	30.4	8.9	2.69	.65	.81	.96	29.0	8.5	2.99	.66	.82	.97	27.8	8.1	3.32	.67	.84	.99
	1200	565	32.4	9.5	2.47	.67	.85	.99	31.2	9.1	2.73	.68	.87	1.00	29.8	8.7	3.03	.70	.89	1.00	28.4	8.3	3.36	.71	.91	1.00
71°F (22°C)	800	380	31.8	9.3	2.44	.47	.59	.71	30.6	9.0	2.71	.47	.60	.72	29.4	8.6	3.01	.48	.61	.74	28.2	8.3	3.34	.48	.62	.75
	1000	470	33.0	9.7	2.50	.48	.63	.77	31.8	9.3	2.77	.48	.64	.78	30.6	9.0	3.07	.49	.65	.80	29.2	8.6	3.41	.50	.66	.82
	1200	565	34.0	10.0	2.54	.50	.66	.83	32.8	9.6	2.81	.50	.68	.84	31.4	9.2	3.12	.51	.69	.86	30.0	8.8	3.45	.52	.70	.89
10ACC-030 — CB30M-41 - CB30U-41 COOLING CAPACITY																										
63°F (17°C)	800	380	28.8	8.4	2.32	.76	.90	1.00	27.6	8.1	2.58	.77	.92	1.00	26.4	7.7	2.87	.79	.94	1.00	25.2	7.4	3.18	.80	.96	1.00
	1000	470	30.0	8.8	2.37	.82	.97	1.00	28.8	8.4	2.63	.83	.99	1.00	27.8	8.1	2.93	.85	1.00	1.00	26.6	7.8	3.25	.87	1.00	1.00
	1200	565	31.2	9.1	2.42	.87	1.00	1.00	30.2	8.9	2.69	.89	1.00	1.00	29.0	8.5	2.99	.91	1.00	1.00	28.0	8.2	3.33	.94	1.00	1.00
67°F (19°C)	800	380	30.4	8.9	2.38	.61	.74	.87	29.2	8.6	2.65	.62	.75	.88	28.0	8.2	2.94	.62	.76	.91	26.8	7.9	3.26	.63	.78	.93
	1000	470	31.6	9.3	2.44	.64	.79	.95	30.4	8.9	2.70	.65	.81	.96	29.2	8.6	3.00	.66	.83	.98	27.8	8.1	3.32	.68	.85	1.00
	1200	565	32.6	9.6	2.47	.68	.85	1.00	31.2	9.1	2.74	.69	.87	1.00	30.0	8.8	3.04	.70	.89	1.00	28.6	8.4	3.36	.72	.92	1.00
71°F (22°C)	800	380	31.8	9.3	2.44	.47	.59	.71	30.6	9.0	2.72	.47	.60	.73	29.4	8.6	3.02	.48	.61	.74	28.2	8.3	3.34	.47	.62	.75
	1000	470	33.2	9.7	2.50	.48	.63	.77	32.0	9.4	2.78	.49	.64	.79	30.6	9.0	3.08	.49	.65	.81	29.4	8.6	3.41	.50	.66	.83
	1200	565	34.2	10.0	2.55	.50	.67	.83	32.8	9.6	2.82	.51	.68	.85	31.6	9.3	3.12	.51	.70	.87	30.2	8.9	3.46	.52	.71	.90
10ACC-036 — C23-46 COOLING CAPACITY																										
63°F (17°C)	1000	470	33.7	9.9	2.82	.74	.88	1.00	31.9	9.3	2.99	.76	.90	1.00	30.1	8.8	3.15	.78	.92	1.00	28.2	8.3	3.31	.80	.95	1.00
	1200	565	34.7	10.2	2.86	.78	.93	1.00	32.9	9.6	3.03	.80	.95	1.00	31.1	9.1	3.20	.82	.98	1.00	29.2	8.6	3.37	.85	1.00	1.00
	1400	660	35.6	10.4	2.89	.82	.97	1.00	33.8	9.9	3.07	.84	1.00	1.00	32.0	9.4	3.25	.87	1.00	1.00	30.1	8.8	3.43	.89	1.00	1.00
67°F (19°C)	1000	470	35.9	10.5	2.91	.58	.71	.84	34.0	10.0	3.09	.59	.73	.87	32.1	9.4	3.26	.60	.75	.89	30.1	8.8	3.43	.61	.77	.92
	1200	565	36.9	10.8	2.94	.60	.75	.90	34.9	10.2	3.13	.61	.77	.92	32.9	9.6	3.31	.63	.80	.95	30.8	9.0	3.48	.64	.82	.98
	1400	660	37.6	11.0	2.97	.63	.79	.95	35.5	10.4	3.16	.64	.82	.97	33.5	9.8	3.34	.65	.84	.99	31.4	9.2	3.52	.67	.87	1.00
71°F (22°C)	1000	470	38.4	11.3	3.00	.44	.56	.68	36.4	10.7	3.20	.44	.57	.70	34.4	10.1	3.39	.44	.58	.72	32.3	9.5	3.57	.45	.59	.74
	1200	565	39.3	11.5	3.04	.44	.59	.73	37.2	10.9	3.24	.45	.60	.75	35.1	10.3	3.43	.45	.61	.77	33.0	9.7	3.62	.46	.63	.80
	1400	660	40.0	11.7	3.06	.45	.61	.77	37.9	11.1	3.26	.46	.63	.79	35.7	10.5	3.46	.46	.64	.82	33.5	9.8	3.66	.47	.66	.85
10ACC-036 — C33-36A/B/C COOLING CAPACITY																										
63°F (17°C)	940	445	33.9	9.9	2.83	.74	.87	.99	32.2	9.4	2.99	.75	.89	1.00	30.3	8.9	3.16	.77	.92	1.00	28.5	8.4	3.32	.79	.94	1.00
	1140	540	35.1	10.3	2.87	.78	.92	1.00	33.2	9.7	3.05	.80	.95	1.00	31.4	9.2	3.22	.82	.97	1.00	29.5	8.6	3.39	.85	1.00	1.00
	1340	630	36.0	10.6	2.91	.82	.97	1.00	34.2	10.0	3.09	.84	.99	1.00	32.3	9.5	3.27	.87	1.00	1.00	30.5	8.9	3.45	.89	1.00	1.00
67°F (19°C)	940	445	36.2	10.6	2.91	.58	.71	.84	34.3	10.1	3.10	.59	.72	.86	32.3	9.5	3.27	.60	.74	.88	30.3	8.9	3.44	.61	.77	.91
	1140	540	37.2	10.9	2.95	.60	.75	.89	35.2	10.3	3.14	.61	.77	.92	33.2	9.7	3.32	.62	.79	.94	31.1	9.1	3.49	.64	.82	.97
	1340	630	37.9	11.1	2.98	.63	.80	.95	35.9	10.5	3.17	.64	.82	.97	33.8	9.9	3.35	.66	.84	.99	31.7	9.3	3.53	.67	.87	1.00
71°F (22°C)	940	445	38.7	11.3	3.01	.44	.56	.68	36.7	10.8	3.20	.44	.57	.70	34.6	10.1	3.40	.44	.58	.72	32.5	9.5	3.58	.45	.59	.74
	1140	540	39.7	11.6	3.05	.44	.58	.73	37.6	11.0	3.25	.45	.60	.75	35.4	10.4	3.44	.45	.61	.77	33.3	9.8	3.63	.46	.63	.80
	1340	630	40.4	11.8	3.08	.45	.61	.77	38.2	11.2	3.28	.46	.63	.79	36.0	10.6	3.47	.46	.64	.82	33.8	9.9	3.67	.47	.66	.85

RATINGS

NOTE - For Temperatures and Capacities not shown in tables, see bulletin - Cooling Unit Rating Table Correction Factor Data in Miscellaneous Engineering Data section.

Entering Wet Bulb Temperature	Total Air Volume		Outdoor Air Temperature Entering Outdoor Coil																							
			85°F (29°C)						95°F (35°C)						105°F (41°C)						115°F (46°C)					
			Total Cooling Capacity		Comp Motor kW Input	Sensible To Total Ratio (S/T) Dry Bulb			Total Cooling Capacity		Comp Motor kW Input	Sensible To Total Ratio (S/T) Dry Bulb			Total Cooling Capacity		Comp Motor kW Input	Sensible To Total Ratio (S/T) Dry Bulb			Total Cooling Capacity		Comp Motor kW Input	Sensible To Total Ratio (S/T) Dry Bulb		
	cfm	L/s	kBtuh	kW		75°F 24°C	80°F 27°C	85°F 29°C	kBtuh	kW		75°F 24°C	80°F 27°C	85°F 29°C	kBtuh	kW		75°F 24°C	80°F 27°C	85°F 29°C	kBtuh	kW		75°F 24°C	80°F 27°C	85°F 29°C
10ACC-036 — C26-31 COOLING CAPACITY																										
63°F (17°C)	1000	470	34.5	10.1	2.85	.74	.88	1.00	32.6	9.6	3.03	.76	.90	1.00	30.8	9.0	3.20	.78	.93	1.00	28.8	8.4	3.36	.80	.96	1.00
	1200	565	35.6	10.4	2.90	.78	.93	1.00	33.7	9.9	3.08	.80	.96	1.00	31.8	9.3	3.25	.83	.98	1.00	29.8	8.7	3.43	.85	1.00	1.00
	1400	660	36.5	10.7	2.93	.82	.98	1.00	34.6	10.1	3.12	.85	1.00	1.00	32.7	9.6	3.31	.87	1.00	1.00	30.9	9.1	3.49	.90	1.00	1.00
67°F (19°C)	1000	470	36.8	10.8	2.94	.58	.71	.85	34.8	10.2	3.13	.59	.73	.87	32.8	9.6	3.31	.60	.75	.89	30.7	9.0	3.48	.62	.78	.92
	1200	565	37.7	11.0	2.98	.60	.76	.90	35.7	10.5	3.17	.62	.78	.93	33.6	9.8	3.36	.63	.80	.95	31.5	9.2	3.53	.65	.83	.98
	1400	660	38.5	11.3	3.01	.63	.80	.96	36.3	10.6	3.20	.64	.83	.98	34.2	10.0	3.39	.66	.85	1.00	32.0	9.4	3.57	.68	.88	1.00
71°F (22°C)	1000	470	39.3	11.5	3.04	.44	.56	.69	37.2	10.9	3.24	.44	.57	.70	35.1	10.3	3.44	.44	.59	.73	32.9	9.6	3.63	.45	.60	.75
	1200	565	40.2	11.8	3.08	.44	.59	.73	38.1	11.2	3.29	.45	.60	.75	35.9	10.5	3.48	.45	.61	.78	33.6	9.8	3.68	.46	.64	.80
	1400	660	40.9	12.0	3.11	.45	.62	.78	38.7	11.3	3.31	.46	.63	.80	36.5	10.7	3.52	.47	.65	.83	34.2	10.0	3.71	.47	.67	.86
10ACC-036 — C26-41 - C26-46 COOLING CAPACITY																										
63°F (17°C)	1000	470	34.7	10.2	2.87	.74	.88	1.00	32.9	9.6	3.04	.76	.90	1.00	30.9	9.1	3.21	.78	.93	1.00	29.0	8.5	3.38	.80	.96	1.00
	1200	565	35.9	10.5	2.91	.79	.94	1.00	34.0	10.0	3.10	.81	.96	1.00	32.0	9.4	3.27	.83	.99	1.00	30.1	8.8	3.45	.86	1.00	1.00
	1400	660	36.9	10.8	2.95	.83	.99	1.00	34.9	10.2	3.14	.85	1.00	1.00	33.0	9.7	3.33	.88	1.00	1.00	31.3	9.2	3.52	.91	1.00	1.00
67°F (19°C)	1000	470	37.0	10.8	2.96	.58	.72	.85	35.1	10.3	3.14	.59	.73	.87	33.0	9.7	3.33	.60	.75	.90	30.9	9.1	3.50	.62	.78	.93
	1200	565	38.0	11.1	3.00	.61	.76	.91	35.9	10.5	3.19	.62	.78	.93	33.8	9.9	3.38	.63	.81	.96	31.7	9.3	3.56	.65	.84	.99
	1400	660	38.8	11.4	3.03	.63	.81	.96	36.7	10.8	3.22	.65	.83	.99	34.5	10.1	3.41	.67	.86	1.00	32.3	9.5	3.60	.68	.89	1.00
71°F (22°C)	1000	470	39.5	11.6	3.06	.44	.56	.69	37.4	11.0	3.26	.44	.57	.71	35.3	10.3	3.46	.45	.59	.73	33.1	9.7	3.65	.45	.60	.75
	1200	565	40.5	11.9	3.10	.45	.59	.74	38.3	11.2	3.30	.45	.61	.76	36.1	10.6	3.50	.46	.62	.78	33.9	9.9	3.70	.46	.64	.81
	1400	660	41.3	12.1	3.13	.45	.62	.79	39.0	11.4	3.33	.46	.64	.81	36.7	10.8	3.54	.47	.65	.83	34.4	10.1	3.74	.48	.67	.87
10ACC-036 — C33-42B COOLING CAPACITY																										
63°F (17°C)	1000	470	34.9	10.2	2.85	.75	.89	1.00	33.0	9.7	3.02	.76	.91	1.00	31.2	9.1	3.19	.78	.93	1.00	29.3	8.6	3.35	.81	.96	1.00
	1200	565	36.0	10.6	2.89	.79	.94	1.00	34.1	10.0	3.07	.81	.96	1.00	32.2	9.4	3.24	.83	.99	1.00	30.3	8.9	3.42	.86	1.00	1.00
	1400	660	36.9	10.8	2.93	.83	.98	1.00	35.0	10.3	3.11	.85	1.00	1.00	33.1	9.7	3.29	.88	1.00	1.00	31.3	9.2	3.48	.91	1.00	1.00
67°F (19°C)	1000	470	37.2	10.9	2.94	.58	.72	.85	35.2	10.3	3.12	.60	.74	.88	33.2	9.7	3.30	.61	.76	.90	31.1	9.1	3.47	.62	.78	.93
	1200	565	38.1	11.2	2.97	.61	.77	.91	36.1	10.6	3.16	.62	.78	.93	34.0	10.0	3.34	.64	.81	.96	31.8	9.3	3.52	.65	.84	.99
	1400	660	38.8	11.4	3.00	.63	.81	.96	36.7	10.8	3.19	.65	.83	.98	34.6	10.1	3.37	.66	.85	1.00	32.4	9.5	3.56	.68	.89	1.00
71°F (22°C)	1000	470	39.7	11.6	3.03	.44	.57	.69	37.6	11.0	3.23	.44	.58	.71	35.5	10.4	3.42	.45	.59	.73	33.3	9.8	3.61	.45	.60	.76
	1200	565	40.6	11.9	3.07	.45	.59	.74	38.4	11.3	3.27	.45	.61	.76	36.2	10.6	3.46	.46	.62	.78	34.0	10.0	3.66	.46	.64	.81
	1400	660	41.2	12.1	3.09	.46	.62	.78	39.0	11.4	3.29	.46	.64	.81	36.8	10.8	3.49	.47	.65	.83	34.5	10.1	3.69	.48	.67	.86
10ACC-036 — C23-51 COOLING CAPACITY																										
63°F (17°C)	1000	470	35.3	10.3	2.89	.74	.88	1.00	33.4	9.8	3.06	.75	.90	1.00	31.5	9.2	3.23	.77	.92	1.00	29.5	8.6	3.40	.80	.95	1.00
	1200	565	36.5	10.7	2.93	.78	.93	1.00	34.5	10.1	3.12	.80	.96	1.00	32.5	9.5	3.29	.82	.98	1.00	30.6	9.0	3.47	.85	1.00	1.00
	1400	660	37.5	11.0	2.97	.82	.98	1.00	35.5	10.4	3.16	.84	1.00	1.00	33.5	9.8	3.35	.87	1.00	1.00	31.7	9.3	3.54	.90	1.00	1.00
67°F (19°C)	1000	470	37.8	11.1	2.98	.58	.71	.84	35.7	10.5	3.17	.59	.73	.86	33.6	9.8	3.35	.60	.75	.89	31.5	9.2	3.53	.61	.77	.92
	1200	565	38.8	11.4	3.02	.60	.75	.90	36.7	10.8	3.22	.61	.77	.92	34.5	10.1	3.40	.63	.80	.95	32.3	9.5	3.58	.64	.82	.98
	1400	660	39.6	11.6	3.05	.62	.79	.95	37.4	11.0	3.25	.64	.82	.98	35.2	10.3	3.44	.66	.84	1.00	32.9	9.6	3.63	.68	.87	1.00
71°F (22°C)	1000	470	40.4	11.8	3.08	.43	.56	.68	38.2	11.2	3.29	.44	.57	.70	36.1	10.6	3.49	.44	.58	.72	33.8	9.9	3.68	.45	.60	.74
	1200	565	41.4	12.1	3.12	.44	.59	.73	39.2	11.5	3.33	.45	.60	.75	36.9	10.8	3.54	.45	.61	.77	34.6	10.1	3.73	.46	.63	.80
	1400	660	42.2	12.4	3.16	.45	.61	.77	39.9	11.7	3.37	.46	.63	.80	37.6	11.0	3.57	.46	.64	.82	35.2	10.3	3.77	.47	.66	.85
10ACC-036 — C33-44C - C33-48B COOLING CAPACITY																										
63°F (17°C)	1000	470	36.1	10.6	2.90	.73	.87	.99	34.2	10.0	3.07	.75	.89	1.00	32.2	9.4	3.24	.77	.92	1.00	30.2	8.9	3.41	.79	.95	1.00
	1200	565	37.3	10.9	2.94	.77	.92	1.00	35.3	10.3	3.12	.79	.95	1.00	33.3	9.8	3.30	.82	.97	1.00	31.2	9.1	3.48	.84	1.00	1.00
	1400	660	38.3	11.2	2.98	.82	.97	1.00	36.3	10.6	3.17	.84	1.00	1.00	34.2	10.0	3.36	.86	1.00	1.00	32.3	9.5	3.55	.89	1.00	1.00
67°F (19°C)	1000	470	38.6	11.3	2.99	.58	.71	.84	36.5	10.7	3.18	.59	.73	.86	34.4	10.1	3.37	.60	.74	.88	32.2	9.4	3.54	.61	.77	.92
	1200	565	39.7	11.6	3.03	.60	.75	.89	37.5	11.0	3.23	.61	.77	.92	35.3	10.3	3.42	.63	.79	.94	33.1	9.7	3.60	.64	.82	.97
	1400	660	40.5	11.9	3.06	.62	.79	.94	38.2	11.2	3.26	.64	.81	.97	36.0	10.6	3.45	.65	.84	.99	33.7	9.9	3.64	.67	.87	1.00
71°F (22°C)	1000	470	41.3	12.1	3.09	.44	.56	.68	39.1	11.5	3.30	.44	.57	.70	36.9	10.8	3.50	.44	.58	.72	34.6	10.1	3.70	.45	.59	.74
	1200	565	42.4	12.4	3.13	.44	.58	.72	40.1	11.8	3.34	.45	.59	.74	37.8	11.1	3.55	.45	.61	.77	35.4	10.4	3.75	.46	.63	.79
	1400	660	43.2	12.7	3.17	.45	.61	.77	40.8	12.0	3.38	.46	.62	.79	38.4	11.3	3.58	.46	.64	.81	36.0	10.6	3.78	.47	.66	.84
10ACC-036 — C33-36B/C WITH G60UHV-36B-090 - C33-42B with G60UHV-36B-090 COOLING CAPACITY																										
63°F (17°C)	1030	485	34.2	10.0	2.84	.75	.90	1.00	32.4	9.5	3.01	.77	.92	1.00	30.6	9.0	3.18	.79	.94	1.00	28.7	8.4	3.34	.82	.97	1.00
	1145	540	34.8	10.2	2.86	.78	.93	1.00	33.0	9.7	3.04	.80	.95	1.00	31.1	9.1	3.21	.82	.98	1.00	29.3	8.6	3.38	.85	1.00	1.00
	1260	595	35.3	10.3	2.89	.80	.96	1.00	33.5	9.8	3.07	.82	.98	1.00	31.7	9.3	3.24	.85	1.00	1.00	29.8	8.7	3.42	.87	1.00	1.00
67°F (19°C)	1030	485	36.4	10.7	2.93	.59	.73	.86	34.5	10.1	3.11	.60	.74	.89	32.5	9.5	3.29	.61	.76	.91	30.5	8.9	3.46	.62	.79	.94
	1145	540	36.9	10.8	2.95	.60	.75	.90	34.9	10.2	3.13	.61	.77	.92	32.9	9.6	3.31	.63	.80	.94	30.9	9.1	3.49	.64	.82	.97
	1260	595	37.4	11.0	2.96	.62	.78	.93	35.3	10.3	3.15	.63	.80	.95	33.3	9.8	3.33	.64	.82	.98	31.2	9.1	3.51	.66	.85	1.00
71°F (22°C)	1030	485	38.8	11.4	3.02	.44	.57	.70	36.8	10.8	3.22	.44	.58	.72	34.7	10.2	3.41	.45	.59	.74	32.6	9.6	3.60	.45	.61	.77
	1145	540	39.3	11.5	3.04	.44	.59	.73	37.3	10.9	3.24	.45	.60	.75	35.1	10.3	3.43	.45	.61	.77	33.0	9.7	3.62	.46	.63	.79
	1260	595	39.8	11.7	3.06	.45	.60	.75	37.7	11.0	3.26	.45	.62	.78	35.5	10.4	3.45	.46	.63	.80	33.3	9.8	3.65	.47	.65	.83
10ACC-036 — C33-36A WITH G60UHV-36A-070 COOLING CAPACITY																										
63°F (17°C)	1075	505	34.9	10.2	2.86	.76	.91	1.00	33.1	9.7	3.03	.78	.93	1.00	31.2	9.1	3.20	.80	.96	1.00	29.4	8.6	3.37	.83	.98	1.00
	1195	565	35.6	10.4	2.88	.79	.94	1.00	33.7	9.9	3.06	.81	.96	1.00	31.8	9.3	3.23	.83	.99	1.00	29.9	8.8	3.41	.86	1.00	1.00
	1315	620	36.1	10.6	2.91	.81	.97	1.00	34.3	10.1	3.09	.83	.99	1.00	32.4	9.5	3.26	.86	1.00	1.00	30.6	9.0	3.44	.89	1.00	1.00
67°F (19°C)	1075	505	37.1	10.9	2.94	.59	.74	.88	35.1	10.3	3.13	.61	.76	.90	33.1	9.7	3.31	.62	.78	.93	31.1	9.1	3.48	.63	.80	.95
	1195	565	37.6	11.0	2.96	.61	.76	.91	35.6	10.4	3.15	.62	.78	.94	33.6	9.8	3.33	.63	.81	.96	31.5	9.2	3.51	.65	.83	.99
	1315	620	38.1	11.2	2.98	.62	.79	.94	36.0	10.6	3.17	.64	.81	.96	34.0	10.0	3.35	.65	.84	.99	31.8	9.3	3.53	.67	.87	1.00
71°F (22°C)	1075	505	39.6	11.6	3.04	.44	.58	.71	37.5	11.0	3.24	.44	.59	.73	35.4	10.4	3.43	.45	.60	.75	33.3	9.8	3.62	.45	.61	.78
	1195	565	40.1	11.8	3.06	.45	.59	.74	38.0	11.1	3.26	.45	.61	.76	35.8	10.5	3.45	.46	.62	.78	33.6	9.8	3.65	.46	.64	.81
	1315	620	40.5	11.9	3.07	.45	.61	.77	38.4	11.3	3.28	.46	.62	.79	36.2	10.6	3.47	.46	.64	.81	33.9	9.9	3.67	.47	.66	.84

RATINGS

NOTE - For Temperatures and Capacities not shown in tables, see bulletin - Cooling Unit Rating Table Correction Factor Data in Miscellaneous Engineering Data section.

Entering Wet Bulb Temperature	Total Air Volume		Outdoor Air Temperature Entering Outdoor Coil																							
			85°F (29°C)						95°F (35°C)						105°F (41°C)						115°F (46°C)					
			Total Cooling Capacity		Comp Motor kW Input	Sensible To Total Ratio (S/T) Dry Bulb			Total Cooling Capacity		Comp Motor kW Input	Sensible To Total Ratio (S/T) Dry Bulb			Total Cooling Capacity		Comp Motor kW Input	Sensible To Total Ratio (S/T) Dry Bulb			Total Cooling Capacity		Comp Motor kW Input	Sensible To Total Ratio (S/T) Dry Bulb		
	cfm	L/s	kBtuh	kW		75°F 24°C	80°F 27°C	85°F 29°C	kBtuh	kW		75°F 24°C	80°F 27°C	85°F 29°C	kBtuh	kW		75°F 24°C	80°F 27°C	85°F 29°C	kBtuh	kW		75°F 24°C	80°F 27°C	85°F 29°C
10ACC-036 — C33-44C WITH G60UHV-36B-090 - C33-48B WITH G60UHV-36B-090 COOLING CAPACITY																										
63°F (17°C)	1030	485	35.3	10.3	2.89	.74	.88	1.00	33.4	9.8	3.06	.76	.90	1.00	31.5	9.2	3.23	.78	.93	1.00	29.5	8.6	3.40	.80	.96	1.00
	1145	540	36.0	10.6	2.91	.77	.91	1.00	34.1	10.0	3.09	.78	.93	1.00	32.1	9.4	3.27	.80	.96	1.00	30.1	8.8	3.44	.83	.99	1.00
	1260	595	36.6	10.7	2.94	.78	.94	1.00	34.6	10.1	3.12	.81	.96	1.00	32.6	9.6	3.30	.83	.99	1.00	30.7	9.0	3.48	.86	1.00	1.00
67°F (19°C)	1030	485	37.7	11.0	2.98	.58	.71	.84	35.7	10.5	3.17	.59	.73	.87	33.6	9.8	3.36	.60	.75	.89	31.5	9.2	3.53	.61	.77	.92
	1145	540	38.3	11.2	3.01	.60	.74	.87	36.3	10.6	3.20	.60	.76	.90	34.1	10.0	3.38	.62	.78	.93	32.0	9.4	3.56	.63	.80	.96
	1260	595	38.9	11.4	3.03	.61	.76	.91	36.7	10.8	3.22	.62	.78	.93	34.6	10.1	3.41	.63	.80	.96	32.4	9.5	3.59	.65	.83	.99
71°F (22°C)	1030	485	40.3	11.8	3.08	.44	.56	.69	38.2	11.2	3.29	.44	.57	.70	36.0	10.6	3.49	.44	.58	.72	33.8	9.9	3.68	.45	.60	.75
	1145	540	40.9	12.0	3.11	.44	.58	.71	38.7	11.3	3.31	.44	.59	.73	36.5	10.7	3.52	.45	.60	.75	34.3	10.1	3.71	.45	.62	.78
	1260	595	41.4	12.1	3.13	.45	.59	.74	39.2	11.5	3.34	.45	.60	.76	36.9	10.8	3.54	.46	.62	.78	34.6	10.1	3.74	.46	.64	.81
10ACC-036 — C23-46 WITH G32V3-75 COOLING CAPACITY																										
63°F (17°C)	1100	520	33.7	9.9	2.83	.76	.90	1.00	31.9	9.3	3.01	.77	.93	1.00	30.2	8.9	3.17	.80	.95	1.00	28.3	8.3	3.33	.82	.98	1.00
	1200	565	34.2	10.0	2.85	.78	.93	1.00	32.4	9.5	3.03	.80	.95	1.00	30.6	9.0	3.20	.82	.98	1.00	28.8	8.4	3.36	.85	1.00	1.00
	1300	615	34.7	10.2	2.87	.80	.95	1.00	32.9	9.6	3.05	.82	.98	1.00	31.1	9.1	3.22	.84	1.00	1.00	29.2	8.6	3.39	.87	1.00	1.00
67°F (19°C)	1100	520	35.9	10.5	2.92	.59	.73	.87	34.0	10.0	3.10	.60	.75	.89	32.0	9.4	3.28	.61	.77	.92	30.1	8.8	3.45	.63	.79	.95
	1200	565	36.4	10.7	2.94	.60	.75	.90	34.4	10.1	3.12	.61	.77	.92	32.4	9.5	3.30	.63	.80	.95	30.4	8.9	3.47	.64	.82	.98
	1300	615	36.7	10.8	2.95	.61	.77	.92	34.8	10.2	3.14	.63	.79	.95	32.7	9.6	3.31	.64	.82	.97	30.7	9.0	3.49	.66	.85	1.00
71°F (22°C)	1100	520	38.3	11.2	3.01	.44	.57	.71	36.3	10.6	3.21	.44	.59	.72	34.3	10.1	3.40	.45	.60	.75	32.2	9.4	3.59	.45	.61	.77
	1200	565	38.8	11.4	3.03	.44	.58	.73	36.7	10.8	3.23	.45	.60	.75	34.6	10.1	3.42	.45	.61	.77	32.5	9.5	3.61	.46	.63	.80
	1300	615	39.1	11.5	3.04	.45	.60	.75	37.1	10.9	3.24	.45	.61	.77	34.9	10.2	3.44	.46	.63	.79	32.8	9.6	3.63	.46	.64	.82
10ACC-036 — C26-31 WITH G32V3-75 COOLING CAPACITY																										
63°F (17°C)	1100	520	34.7	10.2	2.87	.76	.91	1.00	32.9	9.6	3.05	.78	.93	1.00	31.0	9.1	3.22	.80	.96	1.00	29.1	8.5	3.39	.83	.99	1.00
	1200	565	35.3	10.3	2.89	.78	.93	1.00	33.4	9.8	3.07	.80	.96	1.00	31.5	9.2	3.25	.83	.98	1.00	29.6	8.7	3.42	.86	1.00	1.00
	1300	615	35.7	10.5	2.91	.80	.96	1.00	33.9	9.9	3.09	.83	.98	1.00	31.9	9.3	3.27	.85	1.00	1.00	30.1	8.8	3.45	.88	1.00	1.00
67°F (19°C)	1100	520	37.0	10.8	2.96	.59	.74	.87	35.0	10.3	3.14	.60	.75	.90	32.9	9.6	3.33	.61	.78	.92	30.8	9.0	3.50	.63	.80	.95
	1200	565	37.4	11.0	2.97	.60	.76	.90	35.4	10.4	3.16	.61	.78	.93	33.3	9.8	3.35	.63	.80	.95	31.2	9.1	3.53	.64	.83	.98
	1300	615	37.8	11.1	2.99	.62	.78	.93	35.7	10.5	3.18	.63	.80	.95	33.6	9.8	3.37	.64	.83	.98	31.5	9.2	3.55	.66	.85	1.00
71°F (22°C)	1100	520	39.4	11.5	3.06	.44	.58	.71	37.3	10.9	3.26	.45	.59	.73	35.2	10.3	3.45	.45	.60	.75	33.0	9.7	3.65	.45	.62	.78
	1200	565	39.9	11.7	3.07	.45	.59	.73	37.7	11.0	3.28	.45	.60	.75	35.5	10.4	3.48	.45	.62	.78	33.4	9.8	3.67	.46	.63	.80
	1300	615	40.2	11.8	3.09	.45	.60	.76	38.1	11.2	3.29	.46	.62	.78	35.8	10.5	3.49	.46	.63	.80	33.6	9.8	3.69	.47	.65	.83
10ACC-036 — C26-41 WITH G32V3-75 - C26-46 WITH G32V3-75 COOLING CAPACITY																										
63°F (17°C)	1100	520	35.0	10.3	2.87	.77	.91	1.00	33.2	9.7	3.05	.78	.94	1.00	31.2	9.1	3.23	.81	.96	1.00	29.3	8.6	3.40	.83	.99	1.00
	1200	565	35.6	10.4	2.90	.79	.94	1.00	33.7	9.9	3.08	.81	.96	1.00	31.7	9.3	3.26	.83	.99	1.00	29.8	8.7	3.43	.86	1.00	1.00
	1300	615	36.1	10.6	2.91	.81	.96	1.00	34.2	10.0	3.10	.83	.99	1.00	32.2	9.4	3.28	.86	1.00	1.00	30.4	8.9	3.47	.88	1.00	1.00
67°F (19°C)	1100	520	37.2	10.9	2.96	.60	.74	.88	35.2	10.3	3.15	.61	.76	.90	33.1	9.7	3.34	.62	.78	.93	31.1	9.1	3.51	.63	.81	.96
	1200	565	37.7	11.0	2.98	.61	.76	.91	35.6	10.4	3.17	.62	.78	.93	33.6	9.8	3.36	.63	.81	.96	31.4	9.2	3.54	.65	.83	.99
	1300	615	38.1	11.2	3.00	.62	.78	.93	36.0	10.6	3.19	.63	.81	.96	33.9	9.9	3.38	.65	.83	.99	31.7	9.3	3.56	.67	.86	1.00
71°F (22°C)	1100	520	39.7	11.6	3.06	.44	.58	.71	37.6	11.0	3.26	.45	.59	.73	35.4	10.4	3.46	.45	.60	.76	33.2	9.7	3.66	.45	.62	.78
	1200	565	40.2	11.8	3.08	.44	.59	.74	38.0	11.1	3.28	.45	.61	.76	35.8	10.5	3.48	.46	.62	.78	33.6	9.8	3.68	.46	.64	.81
	1300	615	40.6	11.9	3.09	.45	.61	.76	38.3	11.2	3.30	.46	.62	.78	36.1	10.6	3.50	.46	.64	.81	33.8	9.9	3.70	.47	.66	.84
10ACC-036 — C23-51 WITH G32V3-75 COOLING CAPACITY																										
63°F (17°C)	1100	520	35.7	10.5	2.89	.76	.90	1.00	33.7	9.9	3.07	.78	.93	1.00	31.8	9.3	3.25	.80	.95	1.00	29.8	8.7	3.42	.82	.98	1.00
	1200	565	36.2	10.6	2.92	.78	.93	1.00	34.2	10.0	3.10	.80	.95	1.00	32.3	9.5	3.28	.82	.98	1.00	30.3	8.9	3.45	.85	1.00	1.00
	1300	615	36.7	10.8	2.93	.80	.95	1.00	34.7	10.2	3.12	.82	.98	1.00	32.7	9.6	3.30	.84	1.00	1.00	30.8	9.0	3.48	.87	1.00	1.00
67°F (19°C)	1100	520	38.0	11.1	2.99	.59	.73	.87	35.9	10.5	3.18	.60	.75	.89	33.8	9.9	3.36	.61	.77	.92	31.7	9.3	3.54	.63	.79	.95
	1200	565	38.5	11.3	3.01	.60	.75	.90	36.4	10.7	3.20	.61	.77	.92	34.2	10.0	3.38	.63	.80	.95	32.0	9.4	3.56	.64	.82	.98
	1300	615	38.9	11.4	3.02	.61	.77	.92	36.7	10.8	3.22	.63	.80	.95	34.6	10.1	3.40	.64	.82	.98	32.4	9.5	3.59	.66	.85	1.00
71°F (22°C)	1100	520	40.6	11.9	3.09	.44	.57	.70	38.4	11.3	3.29	.44	.58	.72	36.2	10.6	3.50	.45	.60	.74	34.0	10.0	3.69	.45	.61	.77
	1200	565	41.1	12.0	3.11	.44	.58	.73	38.9	11.4	3.31	.45	.60	.75	36.6	10.7	3.52	.45	.61	.77	34.3	10.1	3.71	.46	.63	.80
	1300	615	41.5	12.2	3.12	.45	.60	.75	39.2	11.5	3.33	.45	.61	.77	36.9	10.8	3.53	.46	.63	.79	34.6	10.1	3.73	.47	.65	.82
10ACC-036 — CR26-36 COOLING CAPACITY																										
63°F (17°C)	1000	470	34.5	10.1	2.85	.74	.88	1.00	32.6	9.6	3.02	.76	.90	1.00	30.8	9.0	3.19	.78	.93	1.00	28.8	8.4	3.35	.80	.96	1.00
	1200	565	35.6	10.4	2.89	.78	.93	1.00	33.7	9.9	3.07	.80	.96	1.00	31.8	9.3	3.25	.83	.98	1.00	29.8	8.7	3.42	.85	1.00	1.00
	1400	660	36.5	10.7	2.93	.82	.98	1.00	34.6	10.1	3.12	.85	1.00	1.00	32.7	9.6	3.30	.87	1.00	1.00	30.9	9.1	3.49	.90	1.00	1.00
67°F (19°C)	1000	470	36.8	10.8	2.94	.58	.71	.85	34.8	10.2	3.13	.59	.73	.87	32.8	9.6	3.31	.60	.75	.89	30.7	9.0	3.48	.62	.78	.92
	1200	565	37.7	11.0	2.98	.60	.76	.90	35.7	10.5	3.17	.62	.78	.93	33.6	9.8	3.35	.63	.80	.95	31.5	9.2	3.53	.65	.83	.98
	1400	660	38.5	11.3	3.01	.63	.80	.95	36.4	10.7	3.20	.64	.82	.98	34.2	10.0	3.39	.66	.85	1.00	32.1	9.4	3.57	.68	.88	1.00
71°F (22°C)	1000	470	39.3	11.5	3.04	.44	.56	.69	37.2	10.9	3.24	.44	.57	.70	35.1	10.3	3.43	.44	.59	.73	32.9	9.6	3.63	.45	.60	.75
	1200	565	40.2	11.8	3.08	.44	.59	.73	38.1	11.2	3.28	.45	.60	.75	35.9	10.5	3.48	.45	.61	.78	33.7	9.9	3.67	.46	.63	.80
	1400	660	41.0	12.0	3.10	.45	.62	.78	38.7	11.3	3.31	.46	.63	.80	36.5	10.7	3.51	.47	.65	.83	34.2	10.0	3.71	.47	.67	.86
10ACC-036 — CR26-36 WITH GHR32V3-75 COOLING CAPACITY																										
63°F (17°C)	1065	505	34.6	10.1	2.85	.76	.90	1.00	32.7	9.6	3.03	.77	.92	1.00	30.8	9.0	3.19	.79	.95	1.00	28.9	8.5	3.36	.82	.98	1.00
	1190	560	35.2	10.3	2.88	.78	.93	1.00	33.4	9.8	3.06	.80	.96	1.00	31.4	9.2	3.23	.82	.98	1.00	29.5	8.6	3.40	.85	1.00	1.00
	1300	615	35.8	10.5	2.90	.80	.96	1.00	33.9	9.9	3.08	.83	.98	1.00	32.0	9.4	3.26	.85	1.00	1.00	30.1	8.8	3.44	.88	1.00	1.00
67°F (19°C)	1065	505	36.8	10.8	2.94	.59	.73	.87	34.8	10.2	3.13	.60	.75	.89	32.8	9.6	3.31	.61	.77	.91	30.7	9.0	3.48	.63	.79	.95
	1190	560	37.4	11.0	2.96	.60	.75	.90	35.4	10.4	3.15	.62	.77	.93	33.3	9.8	3.33	.63	.80	.95	31.2	9.1	3.51	.65	.83	.98
	1300	615	37.8	11.1	2.98	.62	.78	.93	35.8	10.5	3.17	.63	.80	.96	33.6	9.8	3.35	.64	.83	.98	31.5	9.2	3.53	.66	.85	1.00
71°F (22°C)	1065	505	39.3	11.5	3.04	.44	.57	.70	37.2	10.9	3.24	.44	.58	.72	35.1	10.3	3.43	.45	.59	.74	32.9	9.6	3.63	.45	.61	.77
	1190	560	39.9	11.7	3.06	.45	.59	.73	37.7	11.0	3.26	.45	.60	.75	35.5	10.4	3.46	.45	.62	.77	33.3	9.8	3.65	.46	.63	.80
	1300	615	40.3	11.8	3.08	.45	.60	.75	38.1	11.2	3.28	.46	.62	.78	35.9	10.5	3.48	.46	.63	.80	33.7	9.9	3.67	.47	.65	.83

RATINGS

NOTE - For Temperatures and Capacities not shown in tables, see bulletin - Cooling Unit Rating Table Correction Factor Data in Miscellaneous Engineering Data section.

Entering Wet Bulb Temperature	Total Air Volume		Outdoor Air Temperature Entering Outdoor Coil																							
			85°F (29°C)						95°F (35°C)						105°F (41°C)						115°F (46°C)					
			Total Cooling Capacity		Comp Motor kW Input	Sensible To Total Ratio (S/T) Dry Bulb			Total Cooling Capacity		Comp Motor kW Input	Sensible To Total Ratio (S/T) Dry Bulb			Total Cooling Capacity		Comp Motor kW Input	Sensible To Total Ratio (S/T) Dry Bulb			Total Cooling Capacity		Comp Motor kW Input	Sensible To Total Ratio (S/T) Dry Bulb		
	cfm	L/s	kBtuh	kW		75°F 24°C	80°F 27°C	85°F 29°C	kBtuh	kW		75°F 24°C	80°F 27°C	85°F 29°C	kBtuh	kW		75°F 24°C	80°F 27°C	85°F 29°C	kBtuh	kW		75°F 24°C	80°F 27°C	85°F 29°C
10ACC-036 — CH33-36A/C-2F COOLING CAPACITY																										
63°F (17°C)	1000	470	34.1	10.0	2.85	.74	.88	.99	32.3	9.5	3.02	.75	.90	1.00	30.4	8.9	3.19	.77	.93	1.00	28.6	8.4	3.34	.80	.95	1.00
	1200	565	35.1	10.3	2.89	.78	.93	1.00	33.3	9.8	3.07	.80	.95	1.00	31.4	9.2	3.24	.82	.98	1.00	29.6	8.7	3.41	.84	1.00	1.00
	1400	660	36.0	10.6	2.93	.81	.97	1.00	34.2	10.0	3.11	.84	.99	1.00	32.3	9.5	3.29	.86	1.00	1.00	30.5	8.9	3.47	.89	1.00	1.00
67°F (19°C)	1000	470	36.4	10.7	2.94	.58	.71	.84	34.5	10.1	3.12	.59	.73	.86	32.5	9.5	3.30	.60	.75	.89	30.5	8.9	3.47	.61	.77	.92
	1200	565	37.3	10.9	2.98	.60	.75	.90	35.3	10.3	3.16	.61	.77	.92	33.3	9.8	3.34	.63	.79	.94	31.2	9.1	3.52	.64	.82	.97
	1400	660	38.0	11.1	3.01	.62	.79	.94	36.0	10.6	3.19	.64	.81	.97	33.9	9.9	3.38	.65	.84	.99	31.8	9.3	3.56	.67	.87	1.00
71°F (22°C)	1000	470	38.8	11.4	3.04	.44	.56	.69	36.8	10.8	3.23	.44	.57	.70	34.8	10.2	3.43	.44	.58	.72	32.7	9.6	3.61	.45	.59	.74
	1200	565	39.8	11.7	3.07	.44	.59	.72	37.7	11.0	3.27	.45	.60	.75	35.6	10.4	3.47	.45	.61	.77	33.4	9.8	3.66	.46	.63	.80
	1400	660	40.5	11.9	3.10	.45	.61	.77	38.4	11.3	3.30	.46	.62	.79	36.2	10.6	3.50	.46	.64	.82	33.9	9.9	3.70	.47	.66	.85
10ACC-036-2F — CH33-36B COOLING CAPACITY																										
63°F (17°C)	1000	470	34.4	10.1	2.86	.75	.89	1.00	32.6	9.6	3.03	.76	.91	1.00	30.7	9.0	3.20	.78	.94	1.00	28.9	8.5	3.36	.81	.96	1.00
	1200	565	35.4	10.4	2.90	.79	.94	1.00	33.6	9.8	3.08	.81	.97	1.00	31.7	9.3	3.25	.84	.99	1.00	29.9	8.8	3.42	.86	1.00	1.00
	1400	660	36.3	10.6	2.94	.83	.98	1.00	34.5	10.1	3.12	.85	1.00	1.00	32.6	9.6	3.30	.88	1.00	1.00	30.9	9.1	3.49	.91	1.00	1.00
67°F (19°C)	1000	470	36.6	10.7	2.94	.58	.72	.86	34.6	10.1	3.13	.59	.74	.88	32.7	9.6	3.30	.61	.76	.90	30.6	9.0	3.48	.62	.78	.93
	1200	565	37.5	11.0	2.98	.61	.76	.91	35.5	10.4	3.16	.62	.79	.93	33.4	9.8	3.35	.64	.81	.96	31.4	9.2	3.52	.65	.83	.99
	1400	660	38.2	11.2	3.00	.64	.81	.96	36.1	10.6	3.19	.65	.83	.98	34.0	10.0	3.38	.67	.86	1.00	31.9	9.3	3.56	.68	.89	1.00
71°F (22°C)	1000	470	39.0	11.4	3.04	.44	.57	.69	37.0	10.8	3.24	.44	.58	.71	34.9	10.2	3.43	.44	.59	.73	32.8	9.6	3.62	.45	.60	.76
	1200	565	39.9	11.7	3.07	.45	.59	.74	37.8	11.1	3.27	.45	.61	.76	35.7	10.5	3.47	.46	.62	.79	33.5	9.8	3.66	.46	.64	.81
	1400	660	40.6	11.9	3.10	.46	.62	.79	38.4	11.3	3.30	.46	.64	.81	36.2	10.6	3.50	.47	.65	.83	34.0	10.0	3.69	.48	.67	.86
10ACC-036 — CH23-41 COOLING CAPACITY																										
63°F (17°C)	1000	470	35.1	10.3	2.88	.74	.88	1.00	33.2	9.7	3.05	.76	.91	1.00	31.3	9.2	3.22	.78	.93	1.00	29.4	8.6	3.39	.80	.96	1.00
	1200	565	36.2	10.6	2.92	.79	.94	1.00	34.3	10.1	3.10	.80	.96	1.00	32.4	9.5	3.28	.83	.99	1.00	30.4	8.9	3.46	.86	1.00	1.00
	1400	660	37.2	10.9	2.96	.83	.98	1.00	35.3	10.3	3.15	.85	1.00	1.00	33.4	9.8	3.34	.88	1.00	1.00	31.5	9.2	3.52	.91	1.00	1.00
67°F (19°C)	1000	470	37.4	11.0	2.97	.58	.72	.85	35.4	10.4	3.16	.59	.73	.87	33.4	9.8	3.34	.60	.75	.90	31.3	9.2	3.51	.61	.77	.92
	1200	565	38.4	11.3	3.01	.61	.76	.90	36.3	10.6	3.20	.62	.78	.93	34.2	10.0	3.38	.63	.80	.96	32.1	9.4	3.56	.65	.83	.99
	1400	660	39.2	11.5	3.04	.63	.80	.95	37.0	10.8	3.23	.64	.83	.98	34.8	10.2	3.42	.66	.85	1.00	32.7	9.6	3.60	.68	.88	1.00
71°F (22°C)	1000	470	40.0	11.7	3.07	.44	.56	.69	37.9	11.1	3.27	.44	.57	.71	35.7	10.5	3.47	.44	.59	.73	33.6	9.8	3.66	.45	.60	.75
	1200	565	41.0	12.0	3.11	.45	.59	.73	38.8	11.4	3.31	.45	.60	.75	36.5	10.7	3.51	.45	.62	.78	34.3	10.1	3.71	.46	.63	.81
	1400	660	41.7	12.2	3.13	.46	.62	.78	39.4	11.5	3.34	.46	.63	.80	37.1	10.9	3.55	.47	.65	.83	34.8	10.2	3.74	.47	.67	.86
10ACC-036 — CH33-42B-2F COOLING CAPACITY																										
63°F (17°C)	1000	470	35.4	10.4	2.89	.74	.87	.99	33.4	9.8	3.06	.75	.90	1.00	31.5	9.2	3.23	.77	.92	1.00	29.5	8.6	3.40	.80	.95	1.00
	1200	565	36.5	10.7	2.93	.77	.93	1.00	34.6	10.1	3.12	.79	.95	1.00	32.6	9.6	3.29	.82	.98	1.00	30.6	9.0	3.47	.85	1.00	1.00
	1400	660	37.5	11.0	2.97	.81	.97	1.00	35.5	10.4	3.16	.84	.99	1.00	33.5	9.8	3.35	.86	1.00	1.00	31.6	9.3	3.53	.89	1.00	1.00
67°F (19°C)	1000	470	37.8	11.1	2.98	.58	.71	.84	35.8	10.5	3.17	.59	.72	.86	33.7	9.9	3.35	.60	.74	.88	31.6	9.3	3.53	.61	.76	.92
	1200	565	38.8	11.4	3.02	.60	.75	.89	36.7	10.8	3.22	.61	.77	.92	34.5	10.1	3.40	.62	.79	.95	32.4	9.5	3.58	.64	.82	.98
	1400	660	39.6	11.6	3.05	.62	.79	.94	37.4	11.0	3.25	.64	.81	.97	35.2	10.3	3.44	.65	.84	1.00	33.0	9.7	3.62	.67	.87	1.00
71°F (22°C)	1000	470	40.4	11.8	3.08	.43	.56	.68	38.3	11.2	3.29	.44	.57	.70	36.1	10.6	3.49	.44	.58	.72	33.9	9.9	3.68	.45	.59	.74
	1200	565	41.4	12.1	3.12	.44	.58	.72	39.2	11.5	3.33	.45	.59	.74	36.9	10.8	3.54	.45	.61	.77	34.7	10.2	3.73	.46	.62	.79
	1400	660	42.2	12.4	3.16	.45	.61	.77	39.9	11.7	3.37	.46	.62	.79	37.6	11.0	3.57	.46	.64	.82	35.2	10.3	3.77	.47	.66	.84
10ACC-036 — CH33-44/48B-2F COOLING CAPACITY																										
63°F (17°C)	1000	470	35.7	10.5	2.90	.73	.87	.99	33.8	9.9	3.08	.75	.89	1.00	31.8	9.3	3.25	.77	.92	1.00	29.8	8.7	3.42	.79	.95	1.00
	1200	565	36.9	10.8	2.95	.77	.93	1.00	34.9	10.2	3.13	.79	.95	1.00	32.8	9.6	3.31	.82	.98	1.00	30.8	9.0	3.49	.84	1.00	1.00
	1400	660	37.9	11.1	2.99	.81	.97	1.00	35.8	10.5	3.18	.84	1.00	1.00	33.8	9.9	3.37	.86	1.00	1.00	31.9	9.3	3.56	.89	1.00	1.00
67°F (19°C)	1000	470	38.2	11.2	3.00	.58	.71	.83	36.2	10.6	3.19	.58	.72	.86	34.0	10.0	3.38	.59	.74	.89	31.9	9.3	3.56	.61	.76	.91
	1200	565	39.3	11.5	3.04	.60	.75	.89	37.1	10.9	3.24	.61	.77	.92	34.9	10.2	3.43	.62	.79	.95	32.7	9.6	3.61	.64	.82	.98
	1400	660	40.1	11.8	3.08	.62	.79	.94	37.9	11.1	3.27	.64	.81	.97	35.6	10.4	3.47	.65	.84	1.00	33.3	9.8	3.65	.67	.87	1.00
71°F (22°C)	1000	470	40.9	12.0	3.10	.44	.56	.68	38.7	11.3	3.31	.44	.57	.70	36.5	10.7	3.52	.44	.58	.71	34.2	10.0	3.71	.45	.59	.74
	1200	565	42.0	12.3	3.15	.44	.58	.72	39.7	11.6	3.36	.45	.59	.74	37.4	11.0	3.56	.45	.61	.77	35.0	10.3	3.76	.46	.62	.79
	1400	660	42.8	12.5	3.18	.45	.61	.77	40.4	11.8	3.39	.46	.62	.79	38.0	11.1	3.60	.46	.64	.81	35.6	10.4	3.80	.47	.66	.84
10ACC-036 — CH33-48C-2F COOLING CAPACITY																										
63°F (17°C)	1000	470	36.1	10.6	2.91	.74	.87	.99	34.1	10.0	3.09	.75	.89	1.00	32.1	9.4	3.27	.77	.92	1.00	30.0	8.8	3.43	.79	.95	1.00
	1200	565	37.3	10.9	2.96	.77	.92	1.00	35.2	10.3	3.15	.79	.95	1.00	33.1	9.7	3.33	.81	.98	1.00	31.1	9.1	3.50	.84	1.00	1.00
	1400	660	38.2	11.2	3.00	.81	.98	1.00	36.2	10.6	3.19	.84	1.00	1.00	34.2	10.0	3.38	.86	1.00	1.00	32.2	9.4	3.58	.89	1.00	1.00
67°F (19°C)	1000	470	38.6	11.3	3.01	.58	.71	.84	36.5	10.7	3.20	.59	.72	.86	34.3	10.1	3.39	.60	.74	.88	32.2	9.4	3.57	.61	.76	.91
	1200	565	39.7	11.6	3.06	.60	.75	.89	37.5	11.0	3.25	.61	.77	.92	35.3	10.3	3.44	.62	.79	.95	33.0	9.7	3.63	.64	.82	.98
	1400	660	40.5	11.9	3.09	.62	.79	.94	38.2	11.2	3.29	.64	.81	.97	35.9	10.5	3.48	.65	.84	1.00	33.6	9.8	3.67	.67	.87	1.00
71°F (22°C)	1000	470	41.2	12.1	3.12	.44	.56	.68	39.1	11.5	3.32	.44	.57	.70	36.8	10.8	3.53	.44	.58	.71	34.6	10.1	3.73	.45	.59	.74
	1200	565	42.4	12.4	3.16	.44	.58	.72	40.0	11.7	3.37	.45	.60	.74	37.7	11.0	3.58	.45	.61	.77	35.3	10.3	3.78	.46	.63	.79
	1400	660	43.2	12.7	3.19	.45	.61	.77	40.8	12.0	3.41	.46	.62	.79	38.4	11.3	3.61	.46	.64	.82	35.9	10.5	3.82	.47	.66	.84
10ACC-036 — CH33-36A-2F WITH G60UHV-36A-070 COOLING CAPACITY																										
63°F (17°C)	1075	505	34.2	10.0	2.84	.75	.90	1.00	32.4	9.5	3.01	.77	.92	1.00	30.6	9.0	3.18	.79	.94	1.00	28.7	8.4	3.34	.82	.97	1.00
	1195	565	34.8	10.2	2.87	.78	.93	1.00	33.0	9.7	3.04	.80	.95	1.00	31.2	9.1	3.21	.82	.97	1.00	29.3	8.6	3.38	.84	1.00	1.00
	1315	620	35.4	10.4	2.89	.80	.95	1.00	33.5	9.8	3.07	.82	.98	1.00	31.7	9.3	3.24	.85	1.00	1.00	29.8	8.7	3.42	.87	1.00	1.00
67°F (19°C)	1075	505	36.5	10.7	2.93	.59	.73	.86	34.5	10.1	3.11	.60	.74	.88	32.6	9.6	3.29	.61	.76	.91	30.5	8.9	3.46	.62	.79	.94
	1195	565	37.0	10.8	2.95	.60	.75	.89	35.0	10.3	3.14	.61	.77	.92	33.0	9.7	3.31	.63	.79	.94	31.0	9.1	3.49	.64	.82	.97
	1315	620	37.5	11.0	2.97	.61	.77	.92	35.5	10.4	3.15	.62	.80	.95	33.4	9.8	3.34	.64	.82	.98	31.3	9.2	3.51	.66	.85	1.00
71°F (22°C)	1075	505	38.9	11.4	3.02	.44	.57	.70	36.9	10.8	3.22	.44	.58	.72	34.9	10.2	3.41	.44	.59	.74	32.7	9.6	3.60	.45	.61	.76
	1195	565	39.5	11.6	3.05	.44	.58	.73	37.4	11.0	3.24	.45	.60	.74	35.3	10.3	3.44	.45	.61	.77	33.1	9.7	3.63	.46	.63	.79
	1315	620	39.9	11.7	3.06	.45	.60	.75	37.8	11.1	3.26	.45	.61	.77	35.7	10.5	3.46	.46	.63	.79	33.5	9.8	3.65	.47	.64	.82

RATINGS

NOTE - For Temperatures and Capacities not shown in tables, see bulletin - Cooling Unit Rating Table Correction Factor Data in Miscellaneous Engineering Data section.

Entering Wet Bulb Temperature	Total Air Volume		Outdoor Air Temperature Entering Outdoor Coil																							
			85°F (29°C)						95°F (35°C)						105°F (41°C)						115°F (46°C)					
			Total Cooling Capacity		Comp Motor kW Input	Sensible To Total Ratio (S/T) Dry Bulb			Total Cooling Capacity		Comp Motor kW Input	Sensible To Total Ratio (S/T) Dry Bulb			Total Cooling Capacity		Comp Motor kW Input	Sensible To Total Ratio (S/T) Dry Bulb			Total Cooling Capacity		Comp Motor kW Input	Sensible To Total Ratio (S/T) Dry Bulb		
	cfm	L/s	kBtuh	kW		75°F 24°C	80°F 27°C	85°F 29°C	kBtuh	kW		75°F 24°C	80°F 27°C	85°F 29°C	kBtuh	kW		75°F 24°C	80°F 27°C	85°F 29°C	kBtuh	kW		75°F 24°C	80°F 27°C	85°F 29°C
10ACC-036 — CH33-36C-2F WITH G60UHV-36B-090 COOLING CAPACITY																										
63°F (17°C)	1030	485	33.9	9.9	2.84	.75	.90	1.00	32.2	9.4	3.01	.77	.92	1.00	30.4	8.9	3.17	.79	.95	1.00	28.6	8.4	3.33	.82	.97	1.00
	1145	540	34.5	10.1	2.86	.78	.93	1.00	32.7	9.6	3.04	.80	.95	1.00	30.9	9.1	3.20	.82	.98	1.00	29.1	8.5	3.37	.85	1.00	1.00
	1260	595	35.1	10.3	2.88	.80	.96	1.00	33.3	9.8	3.06	.83	.98	1.00	31.5	9.2	3.23	.85	1.00	1.00	29.7	8.7	3.40	.88	1.00	1.00
67°F (19°C)	1030	485	36.1	10.6	2.92	.59	.73	.87	34.2	10.0	3.10	.60	.75	.89	32.2	9.4	3.28	.61	.77	.91	30.2	8.9	3.45	.63	.79	.94
	1145	540	36.6	10.7	2.94	.60	.75	.90	34.7	10.2	3.12	.61	.77	.92	32.7	9.6	3.30	.63	.80	.95	30.7	9.0	3.47	.64	.82	.97
	1260	595	37.0	10.8	2.96	.62	.78	.93	35.1	10.3	3.14	.63	.80	.95	33.0	9.7	3.32	.64	.82	.97	31.0	9.1	3.50	.66	.85	1.00
71°F (22°C)	1030	485	38.5	11.3	3.01	.44	.57	.70	36.5	10.7	3.21	.44	.58	.72	34.5	10.1	3.40	.45	.60	.74	32.4	9.5	3.58	.45	.61	.77
	1145	540	39.0	11.4	3.03	.44	.59	.73	37.0	10.8	3.23	.45	.60	.75	34.9	10.2	3.42	.45	.61	.77	32.8	9.6	3.61	.46	.63	.80
	1260	595	39.4	11.5	3.05	.45	.60	.76	37.4	11.0	3.25	.45	.61	.78	35.3	10.3	3.44	.46	.63	.80	33.1	9.7	3.63	.47	.65	.83
10ACC-036 — CH33-36B-2F WITH G60UHV-36B-090 COOLING CAPACITY																										
63°F (17°C)	1030	485	34.2	10.0	2.84	.75	.90	1.00	32.4	9.5	3.01	.77	.92	1.00	30.5	8.9	3.18	.79	.95	1.00	28.7	8.4	3.34	.82	.97	1.00
	1145	540	34.8	10.2	2.86	.78	.93	1.00	32.9	9.6	3.04	.80	.95	1.00	31.1	9.1	3.21	.82	.98	1.00	29.3	8.6	3.38	.85	1.00	1.00
	1260	595	35.3	10.3	2.88	.80	.96	1.00	33.5	9.8	3.07	.82	.98	1.00	31.7	9.3	3.24	.85	1.00	1.00	29.8	8.7	3.41	.87	1.00	1.00
67°F (19°C)	1030	485	36.3	10.6	2.92	.59	.73	.86	34.4	10.1	3.11	.60	.75	.89	32.5	9.5	3.28	.61	.76	.91	30.4	8.9	3.45	.62	.79	.94
	1145	540	36.9	10.8	2.94	.60	.75	.89	34.9	10.2	3.13	.61	.77	.92	32.9	9.6	3.31	.63	.80	.95	30.9	9.1	3.48	.64	.82	.97
	1260	595	37.3	10.9	2.96	.62	.78	.93	35.3	10.3	3.15	.63	.80	.95	33.3	9.8	3.33	.64	.82	.98	31.2	9.1	3.50	.66	.85	1.00
71°F (22°C)	1030	485	38.8	11.4	3.02	.44	.57	.70	36.7	10.8	3.21	.44	.58	.72	34.7	10.2	3.40	.45	.59	.74	32.6	9.6	3.59	.45	.61	.77
	1145	540	39.3	11.5	3.04	.44	.59	.73	37.2	10.9	3.24	.45	.60	.75	35.1	10.3	3.43	.45	.61	.77	33.0	9.7	3.62	.46	.63	.79
	1260	595	39.7	11.6	3.05	.45	.60	.76	37.6	11.0	3.25	.45	.61	.78	35.5	10.4	3.45	.46	.63	.80	33.3	9.8	3.64	.47	.65	.83
10ACC-036 — CH33-42B-2F WITH G60UHV-36B-090 COOLING CAPACITY																										
63°F (17°C)	1030	485	35.1	10.3	2.88	.74	.88	1.00	33.3	9.8	3.06	.76	.90	1.00	31.4	9.2	3.23	.78	.93	1.00	29.4	8.6	3.39	.80	.96	1.00
	1145	540	35.8	10.5	2.91	.76	.91	1.00	33.9	9.9	3.09	.78	.94	1.00	31.9	9.3	3.26	.81	.96	1.00	30.0	8.8	3.43	.83	.99	1.00
	1260	595	36.4	10.7	2.93	.79	.94	1.00	34.5	10.1	3.11	.81	.96	1.00	32.5	9.5	3.29	.83	.99	1.00	30.5	8.9	3.47	.86	1.00	1.00
67°F (19°C)	1030	485	37.6	11.0	2.97	.58	.71	.85	35.5	10.4	3.16	.59	.73	.87	33.5	9.8	3.34	.60	.75	.90	31.3	9.2	3.52	.61	.77	.93
	1145	540	38.2	11.2	3.00	.59	.74	.88	36.1	10.6	3.19	.60	.76	.90	34.0	10.0	3.37	.62	.78	.93	31.8	9.3	3.55	.63	.80	.96
	1260	595	38.7	11.3	3.02	.60	.76	.91	36.6	10.7	3.21	.62	.78	.93	34.4	10.1	3.40	.63	.81	.96	32.2	9.4	3.58	.65	.83	.99
71°F (22°C)	1030	485	40.1	11.8	3.07	.44	.56	.69	38.0	11.1	3.28	.44	.57	.70	35.8	10.5	3.48	.44	.59	.73	33.6	9.8	3.67	.45	.60	.75
	1145	540	40.7	11.9	3.10	.44	.58	.71	38.6	11.3	3.30	.44	.59	.73	36.4	10.7	3.50	.45	.60	.75	34.1	10.0	3.70	.45	.62	.78
	1260	595	41.2	12.1	3.12	.45	.59	.74	39.0	11.4	3.33	.45	.60	.76	36.7	10.8	3.53	.46	.62	.78	34.5	10.1	3.72	.46	.63	.81
10ACC-036 — CH33-44/48B-2F WITH G60UHV-36B-090 COOLING CAPACITY																										
63°F (17°C)	1030	485	35.5	10.4	2.90	.74	.88	1.00	33.6	9.8	3.07	.76	.90	1.00	31.6	9.3	3.25	.78	.93	1.00	29.6	8.7	3.41	.80	.96	1.00
	1145	540	36.2	10.6	2.92	.76	.91	1.00	34.2	10.0	3.10	.78	.94	1.00	32.2	9.4	3.28	.80	.96	1.00	30.2	8.9	3.45	.83	.99	1.00
	1260	595	36.8	10.8	2.95	.79	.94	1.00	34.8	10.2	3.13	.81	.96	1.00	32.8	9.6	3.31	.83	.99	1.00	30.8	9.0	3.49	.86	1.00	1.00
67°F (19°C)	1030	485	38.0	11.1	2.99	.58	.71	.85	35.9	10.5	3.18	.59	.73	.87	33.8	9.9	3.37	.60	.75	.89	31.7	9.3	3.55	.61	.77	.92
	1145	540	38.6	11.3	3.02	.59	.74	.88	36.5	10.7	3.21	.60	.75	.90	34.3	10.1	3.40	.62	.78	.93	32.1	9.4	3.58	.63	.80	.96
	1260	595	39.1	11.5	3.04	.61	.76	.91	37.0	10.8	3.23	.62	.78	.93	34.8	10.2	3.42	.63	.81	.96	32.5	9.5	3.61	.65	.83	.99
71°F (22°C)	1030	485	40.6	11.9	3.09	.44	.56	.69	38.5	11.3	3.30	.44	.57	.70	36.2	10.6	3.50	.44	.58	.72	34.0	10.0	3.70	.45	.60	.75
	1145	540	41.2	12.1	3.12	.44	.58	.71	39.0	11.4	3.33	.44	.59	.73	36.8	10.8	3.53	.45	.60	.75	34.4	10.1	3.73	.45	.62	.78
	1260	595	41.8	12.3	3.14	.44	.59	.73	39.5	11.6	3.35	.45	.60	.76	37.2	10.9	3.56	.46	.62	.78	34.8	10.2	3.76	.46	.64	.81
10ACC-036 — CH33-48C-2F WITH G60UHV-36B-090 COOLING CAPACITY																										
63°F (17°C)	1030	485	36.0	10.6	2.91	.74	.88	1.00	34.0	10.0	3.08	.76	.90	1.00	32.0	9.4	3.26	.78	.93	1.00	30.0	8.8	3.42	.80	.96	1.00
	1145	540	36.7	10.8	2.93	.76	.91	1.00	34.6	10.1	3.12	.78	.94	1.00	32.6	9.6	3.29	.80	.96	1.00	30.6	9.0	3.46	.83	.99	1.00
	1260	595	37.3	10.9	2.96	.79	.94	1.00	35.2	10.3	3.14	.81	.97	1.00	33.2	9.7	3.32	.83	.99	1.00	31.2	9.1	3.50	.86	1.00	1.00
67°F (19°C)	1030	485	38.5	11.3	3.00	.58	.71	.85	36.4	10.7	3.20	.59	.73	.87	34.2	10.0	3.38	.60	.75	.89	32.0	9.4	3.56	.61	.77	.92
	1145	540	39.1	11.5	3.03	.59	.74	.87	36.9	10.8	3.22	.60	.76	.90	34.8	10.2	3.41	.62	.78	.93	32.5	9.5	3.59	.63	.80	.96
	1260	595	39.6	11.6	3.05	.61	.76	.91	37.4	11.0	3.24	.62	.78	.93	35.2	10.3	3.43	.63	.81	.96	32.9	9.6	3.62	.65	.83	.99
71°F (22°C)	1030	485	41.1	12.0	3.11	.44	.56	.68	38.9	11.4	3.31	.44	.57	.70	36.7	10.8	3.52	.44	.58	.72	34.4	10.1	3.71	.45	.60	.75
	1145	540	41.7	12.2	3.13	.44	.58	.71	39.5	11.6	3.34	.44	.59	.73	37.2	10.9	3.55	.45	.60	.75	34.9	10.2	3.75	.45	.61	.78
	1260	595	42.3	12.4	3.15	.44	.59	.74	40.0	11.7	3.36	.45	.60	.75	37.6	11.0	3.57	.45	.62	.78	35.2	10.3	3.77	.46	.64	.81
10ACC-036 — CH23-41 WITH GHR32V3-75 COOLING CAPACITY																										
63°F (17°C)	1065	505	35.2	10.3	2.88	.76	.90	1.00	33.3	9.8	3.06	.78	.92	1.00	31.4	9.2	3.23	.79	.95	1.00	29.5	8.6	3.39	.82	.98	1.00
	1190	560	35.9	10.5	2.91	.78	.93	1.00	34.0	10.0	3.09	.80	.96	1.00	32.1	9.4	3.26	.83	.98	1.00	30.1	8.8	3.44	.85	1.00	1.00
	1300	615	36.4	10.7	2.93	.80	.96	1.00	34.5	10.1	3.11	.83	.99	1.00	32.6	9.6	3.29	.85	1.00	1.00	30.7	9.0	3.47	.88	1.00	1.00
67°F (19°C)	1065	505	37.5	11.0	2.97	.59	.73	.87	35.4	10.4	3.15	.60	.75	.89	33.4	9.8	3.34	.61	.77	.92	31.3	9.2	3.51	.63	.79	.95
	1190	560	38.1	11.2	2.99	.60	.76	.90	36.0	10.6	3.18	.62	.78	.93	33.9	9.9	3.36	.63	.80	.95	31.8	9.3	3.54	.65	.83	.98
	1300	615	38.5	11.3	3.01	.62	.78	.93	36.4	10.7	3.20	.63	.80	.96	34.3	10.1	3.39	.65	.83	.98	32.1	9.4	3.56	.66	.86	1.00
71°F (22°C)	1065	505	40.0	11.7	3.06	.44	.57	.70	37.9	11.1	3.27	.44	.58	.72	35.7	10.5	3.47	.45	.60	.74	33.5	9.8	3.66	.45	.61	.77
	1190	560	40.6	11.9	3.09	.45	.59	.73	38.4	11.3	3.29	.45	.60	.75	36.2	10.6	3.49	.45	.62	.78	33.9	9.9	3.69	.46	.63	.80
	1300	615	41.0	12.0	3.10	.45	.60	.76	38.8	11.4	3.31	.46	.62	.78	36.5	10.7	3.51	.46	.64	.81	34.3	10.1	3.71	.47	.65	.84
10ACC-036 — CB29M-46 - CB28UH-042 COOLING CAPACITY																										
63°F (17°C)	1000	470	34.3	10.1	2.84	.74	.88	1.00	32.5	9.5	3.01	.76	.90	1.00	30.6	9.0	3.18	.78	.93	1.00	28.7	8.4	3.34	.80	.96	1.00
	1200	565	35.4	10.4	2.88	.78	.94	1.00	33.5	9.8	3.06	.80	.96	1.00	31.6	9.3	3.24	.83	.98	1.00	29.7	8.7	3.41	.85	1.00	1.00
	1400	660	36.4	10.7	2.92	.82	.98	1.00	34.5	10.1	3.11	.85	1.00	1.00	32.6	9.6	3.29	.87	1.00	1.00	30.8	9.0	3.48	.91	1.00	1.00
67°F (19°C)	1000	470	36.6	10.7	2.93	.58	.72	.84	34.6	10.1	3.12	.59	.73	.87	32.6	9.6	3.30	.60	.75	.89	30.6	9.0	3.47	.61	.77	.92
	1200	565	37.6	11.0	2.97	.60	.76	.90	35.5	10.4	3.16	.62	.78	.93	33.5	9.8	3.34	.63	.80	.95	31.3	9.2	3.52	.65	.83	.99
	1400	660	38.4	11.3	3.00	.63	.80	.95	36.2	10.6	3.19	.64	.83	.98	34.1	10.0	3.38	.66	.85	1.00	31.9	9.3	3.56	.68	.88	1.00
71°F (22°C)	1000	470	39.1	11.5	3.03	.44	.56	.69	37.1	10.9	3.23	.44	.57	.70	35.0	10.3	3.43	.44	.58	.72	32.8	9.6	3.62	.45	.60	.74
	1200	565	40.1	11.8	3.07	.45	.59	.73	38.0	11.1	3.27	.45	.60	.75	35.8	10.5	3.47	.45	.61	.77	33.5	9.8	3.67	.46	.63	.80
	1400	660	40.8	12.0	3.10	.46	.62	.78	38.6	11.3	3.30	.46	.63	.80	36.3	10.6	3.51	.47	.65	.83	34.0	10.0	3.70	.47	.67	.86

RATINGS

NOTE - For Temperatures and Capacities not shown in tables, see bulletin - Cooling Unit Rating Table Correction Factor Data in Miscellaneous Engineering Data section.

Entering Wet Bulb Temperature	Total Air Volume		Outdoor Air Temperature Entering Outdoor Coil																							
			85°F (29°C)						95°F (35°C)						105°F (41°C)						115°F (46°C)					
			Total Cooling Capacity		Comp Motor kW Input	Sensible To Total Ratio (S/T) Dry Bulb			Total Cooling Capacity		Comp Motor kW Input	Sensible To Total Ratio (S/T) Dry Bulb			Total Cooling Capacity		Comp Motor kW Input	Sensible To Total Ratio (S/T) Dry Bulb			Total Cooling Capacity		Comp Motor kW Input	Sensible To Total Ratio (S/T) Dry Bulb		
	cfm	L/s	kBtuh	kW		75°F 24°C	80°F 27°C	85°F 29°C	kBtuh	kW		75°F 24°C	80°F 27°C	85°F 29°C	kBtuh	kW		75°F 24°C	80°F 27°C	85°F 29°C	kBtuh	kW		75°F 24°C	80°F 27°C	85°F 29°C
10ACC-036 — CB30M-31 - CB30U-31 COOLING CAPACITY																										
63°F (17°C)	1050	495	34.4	10.1	2.85	.75	.90	1.00	32.6	9.6	3.03	.77	.92	1.00	30.7	9.0	3.20	.79	.94	1.00	28.8	8.4	3.36	.81	.97	1.00
	1150	545	35.0	10.3	2.87	.77	.92	1.00	33.1	9.7	3.05	.79	.95	1.00	31.2	9.1	3.23	.81	.97	1.00	29.3	8.6	3.40	.84	1.00	1.00
	1250	590	35.5	10.4	2.89	.79	.95	1.00	33.6	9.8	3.08	.81	.97	1.00	31.7	9.3	3.26	.84	1.00	1.00	29.8	8.7	3.43	.86	1.00	1.00
67°F (19°C)	1050	495	36.7	10.8	2.94	.59	.72	.86	34.7	10.2	3.13	.60	.74	.88	32.7	9.6	3.31	.61	.76	.91	30.6	9.0	3.49	.62	.79	.94
	1150	545	37.2	10.9	2.96	.60	.75	.89	35.2	10.3	3.15	.61	.76	.91	33.1	9.7	3.34	.62	.79	.94	31.0	9.1	3.51	.64	.81	.97
	1250	590	37.6	11.0	2.98	.61	.77	.91	35.5	10.4	3.17	.62	.79	.94	33.5	9.8	3.35	.64	.81	.97	31.3	9.2	3.53	.65	.84	1.00
71°F (22°C)	1050	495	39.2	11.5	3.04	.44	.57	.70	37.1	10.9	3.24	.44	.58	.72	35.0	10.3	3.44	.45	.59	.74	32.8	9.6	3.63	.45	.61	.76
	1150	545	39.7	11.6	3.06	.44	.58	.72	37.6	11.0	3.26	.45	.59	.74	35.4	10.4	3.46	.45	.61	.76	33.2	9.7	3.66	.46	.62	.79
	1250	590	40.1	11.8	3.08	.45	.59	.74	37.9	11.1	3.28	.45	.61	.76	35.7	10.5	3.48	.46	.62	.79	33.5	9.8	3.68	.46	.64	.82
10ACC-036 — CB30M-41 - CB30M-46 - CB30U-41/46 COOLING CAPACITY																										
63°F (17°C)	1000	470	34.4	10.1	2.84	.74	.88	1.00	32.6	9.6	3.02	.76	.90	1.00	30.6	9.0	3.19	.77	.93	1.00	28.7	8.4	3.35	.80	.96	1.00
	1200	565	35.6	10.4	2.89	.78	.93	1.00	33.6	9.8	3.07	.80	.96	1.00	31.6	9.3	3.25	.83	.99	1.00	29.7	8.7	3.42	.85	1.00	1.00
	1400	660	36.5	10.7	2.93	.82	.98	1.00	34.5	10.1	3.12	.85	1.00	1.00	32.6	9.6	3.30	.87	1.00	1.00	30.8	9.0	3.49	.90	1.00	1.00
67°F (19°C)	1000	470	36.7	10.8	2.94	.58	.71	.85	34.8	10.2	3.12	.59	.73	.86	32.7	9.6	3.31	.60	.75	.89	30.6	9.0	3.48	.61	.78	.92
	1200	565	37.8	11.1	2.98	.60	.76	.90	35.7	10.5	3.17	.62	.78	.93	33.6	9.8	3.35	.63	.80	.95	31.4	9.2	3.53	.65	.83	.98
	1400	660	38.5	11.3	3.01	.63	.80	.95	36.4	10.7	3.20	.64	.82	.98	34.2	10.0	3.39	.66	.85	1.00	32.0	9.4	3.57	.68	.88	1.00
71°F (22°C)	1000	470	39.3	11.5	3.04	.44	.56	.68	37.2	10.9	3.24	.44	.57	.70	35.0	10.3	3.44	.44	.58	.72	32.9	9.6	3.63	.45	.60	.75
	1200	565	40.3	11.8	3.08	.44	.59	.73	38.1	11.2	3.28	.45	.60	.75	35.9	10.5	3.48	.45	.61	.78	33.6	9.8	3.68	.46	.63	.80
	1400	660	41.0	12.0	3.11	.45	.62	.78	38.8	11.4	3.31	.46	.63	.80	36.4	10.7	3.52	.47	.65	.83	34.1	10.0	3.72	.48	.67	.86
10ACC-042 — C23-46 COOLING CAPACITY																										
63°F (17°C)	1200	565	38.7	11.3	3.16	.73	.87	.98	37.3	10.9	3.53	.74	.88	.99	35.8	10.5	3.94	.76	.90	1.00	34.3	10.1	4.41	.77	.92	1.00
	1400	660	39.6	11.6	3.18	.77	.91	1.00	38.2	11.2	3.55	.78	.93	1.00	36.7	10.8	3.96	.79	.95	1.00	35.1	10.3	4.42	.81	.96	1.00
	1600	755	40.4	11.8	3.20	.80	.95	1.00	38.9	11.4	3.56	.82	.97	1.00	37.5	11.0	3.97	.83	.98	1.00	35.9	10.5	4.44	.85	.99	1.00
67°F (19°C)	1200	565	41.0	12.0	3.20	.57	.71	.84	39.5	11.6	3.57	.58	.72	.85	37.9	11.1	3.98	.59	.73	.87	36.2	10.6	4.45	.59	.75	.89
	1400	660	41.8	12.3	3.22	.59	.74	.88	40.2	11.8	3.58	.60	.76	.90	38.6	11.3	4.00	.61	.77	.92	36.9	10.8	4.48	.62	.79	.94
	1600	755	42.4	12.4	3.23	.61	.78	.93	40.8	12.0	3.60	.62	.79	.94	39.1	11.5	4.02	.63	.81	.96	37.4	11.0	4.49	.64	.83	.98
71°F (22°C)	1200	565	43.5	12.7	3.25	.43	.56	.68	42.0	12.3	3.62	.43	.56	.69	40.3	11.8	4.04	.43	.57	.71	38.5	11.3	4.52	.44	.58	.72
	1400	660	44.3	13.0	3.26	.44	.58	.72	42.7	12.5	3.63	.44	.59	.73	41.0	12.0	4.06	.44	.60	.75	39.1	11.5	4.54	.45	.61	.77
	1600	755	44.9	13.2	3.28	.44	.60	.76	43.2	12.7	3.64	.45	.61	.77	41.5	12.2	4.07	.45	.62	.79	39.7	11.6	4.55	.45	.63	.81
10ACC-042 — C26-41 COOLING CAPACITY																										
63°F (17°C)	1000	470	38.5	11.3	3.15	.70	.83	.94	37.0	10.8	3.51	.71	.84	.96	35.5	10.4	3.91	.72	.86	.97	34.0	10.0	4.37	.73	.87	.99
	1200	565	39.7	11.6	3.17	.73	.88	.99	38.3	11.2	3.53	.75	.89	1.00	36.7	10.8	3.94	.76	.91	1.00	35.0	10.3	4.41	.78	.93	1.00
	1400	660	40.8	12.0	3.19	.77	.92	1.00	39.2	11.5	3.55	.79	.94	1.00	37.6	11.0	3.97	.81	.96	1.00	36.0	10.6	4.43	.82	.98	1.00
67°F (19°C)	1000	470	40.9	12.0	3.19	.56	.67	.79	39.4	11.5	3.56	.56	.69	.81	37.8	11.1	3.97	.57	.70	.82	36.1	10.6	4.44	.57	.71	.84
	1200	565	42.1	12.3	3.22	.57	.71	.85	40.5	11.9	3.58	.58	.73	.86	38.8	11.4	4.00	.59	.74	.88	37.0	10.8	4.47	.60	.76	.90
	1400	660	43.0	12.6	3.23	.60	.75	.90	41.3	12.1	3.60	.61	.77	.91	39.6	11.6	4.02	.62	.78	.93	37.7	11.0	4.49	.63	.80	.96
71°F (22°C)	1000	470	43.6	12.8	3.24	.42	.54	.65	42.0	12.3	3.62	.42	.54	.66	40.3	11.8	4.04	.42	.55	.67	38.5	11.3	4.51	.43	.56	.68
	1200	565	44.8	13.1	3.27	.43	.56	.69	43.1	12.6	3.64	.43	.57	.70	41.3	12.1	4.06	.43	.57	.72	39.4	11.5	4.54	.44	.59	.73
	1400	660	45.7	13.4	3.28	.44	.58	.73	43.9	12.9	3.66	.44	.59	.74	42.0	12.3	4.08	.44	.60	.76	40.0	11.7	4.56	.45	.62	.78
10ACC-042 — C26-46 COOLING CAPACITY																										
63°F (17°C)	1100	520	38.8	11.4	3.16	.72	.85	.97	37.3	10.9	3.52	.73	.87	.98	35.8	10.5	3.93	.74	.88	.99	34.2	10.0	4.39	.76	.90	1.00
	1300	615	39.9	11.7	3.18	.76	.90	1.00	38.4	11.3	3.54	.77	.92	1.00	36.8	10.8	3.96	.78	.94	1.00	35.2	10.3	4.42	.80	.96	1.00
	1500	710	40.8	12.0	3.20	.79	.95	1.00	39.3	11.5	3.56	.81	.96	1.00	37.7	11.0	3.98	.83	.98	1.00	36.1	10.6	4.44	.84	.99	1.00
67°F (19°C)	1100	520	41.2	12.1	3.21	.56	.69	.82	39.6	11.6	3.57	.57	.70	.83	38.0	11.1	3.98	.58	.72	.85	36.2	10.6	4.46	.59	.73	.87
	1300	615	42.2	12.4	3.22	.59	.73	.87	40.6	11.9	3.59	.60	.75	.89	38.8	11.4	4.01	.60	.76	.91	37.0	10.8	4.48	.61	.78	.93
	1500	710	42.9	12.6	3.24	.61	.77	.92	41.3	12.1	3.61	.62	.79	.94	39.5	11.6	4.03	.63	.81	.96	37.7	11.0	4.50	.64	.82	.98
71°F (22°C)	1100	520	43.8	12.8	3.26	.42	.55	.67	42.2	12.4	3.63	.43	.55	.68	40.4	11.8	4.05	.43	.56	.69	38.6	11.3	4.53	.43	.57	.71
	1300	615	44.8	13.1	3.28	.43	.57	.71	43.1	12.6	3.65	.44	.58	.72	41.3	12.1	4.07	.44	.59	.74	39.3	11.5	4.55	.44	.60	.76
	1500	710	45.6	13.4	3.29	.44	.60	.75	43.8	12.8	3.67	.45	.61	.77	41.9	12.3	4.09	.45	.62	.78	39.9	11.7	4.57	.45	.63	.81
10ACC-042 — C33-42B COOLING CAPACITY																										
63°F (17°C)	1200	565	39.7	11.6	3.17	.74	.88	.99	38.3	11.2	3.53	.75	.90	.99	36.8	10.8	3.95	.77	.91	1.00	35.2	10.3	4.41	.78	.93	1.00
	1400	660	40.6	11.9	3.19	.78	.93	1.00	39.2	11.5	3.55	.79	.94	1.00	37.6	11.0	3.97	.81	.96	1.00	36.1	10.6	4.43	.83	.98	1.00
	1600	755	41.4	12.1	3.20	.81	.96	1.00	40.0	11.7	3.57	.83	.98	1.00	38.5	11.3	3.98	.84	.99	1.00	36.9	10.8	4.46	.86	1.00	1.00
67°F (19°C)	1200	565	42.0	12.3	3.21	.58	.72	.85	40.4	11.8	3.57	.58	.73	.87	38.8	11.4	3.99	.59	.74	.88	37.1	10.9	4.47	.60	.76	.90
	1400	660	42.7	12.5	3.22	.60	.76	.90	41.2	12.1	3.59	.61	.77	.92	39.5	11.6	4.01	.62	.78	.93	37.8	11.1	4.48	.63	.80	.95
	1600	755	43.4	12.7	3.23	.62	.79	.94	41.7	12.2	3.60	.63	.81	.96	40.0	11.7	4.02	.64	.83	.97	38.3	11.2	4.49	.65	.84	.98
71°F (22°C)	1200	565	44.6	13.1	3.25	.43	.56	.69	42.9	12.6	3.62	.43	.57	.71	41.2	12.1	4.04	.43	.58	.72	39.4	11.5	4.52	.44	.59	.74
	1400	660	45.3	13.3	3.27	.44	.58	.73	43.6	12.8	3.64	.44	.59	.75	41.9	12.3	4.06	.44	.60	.76	40.0	11.7	4.55	.45	.62	.78
	1600	755	45.9	13.5	3.28	.45	.61	.77	44.2	13.0	3.65	.45	.62	.79	42.4	12.4	4.07	.46	.63	.81	40.5	11.9	4.56	.46	.64	.83
10ACC-042 — C33-44C - C33-48B/C - C23-51 - CR26-48N/W COOLING CAPACITY																										
63°F (17°C)	1200	565	41.0	12.0	3.20	.73	.87	.98	39.5	11.6	3.56	.74	.88	.99	37.9	11.1	3.97	.75	.90	1.00	36.3	10.6	4.44	.77	.92	1.00
	1400	660	42.0	12.3	3.21	.76	.91	1.00	40.5	11.9	3.58	.78	.93	1.00	38.9	11.4	3.99	.79	.94	1.00	37.2	10.9	4.47	.81	.96	1.00
	1600	755	42.9	12.6	3.23	.80	.95	1.00	41.3	12.1	3.60	.81	.97	1.00	39.7	11.6	4.01	.83	.98	1.00	38.0	11.1	4.49	.85	.99	1.00
67°F (19°C)	1200	565	43.6	12.8	3.24	.57	.70	.83	41.9	12.3	3.61	.58	.71	.85	40.2	11.8	4.03	.58	.73	.87	38.4	11.3	4.50	.59	.74	.89
	1400	660	44.4	13.0	3.26	.59	.74	.88	42.7	12.5	3.63	.60	.75	.90	41.0	12.0	4.05	.60	.77	.92	39.1	11.5	4.53	.62	.79	.94
	1600	755	45.1	13.2	3.27	.61	.78	.92	43.4	12.7	3.64	.62	.79	.94	41.6	12.2	4.07	.63	.81	.96	39.7	11.6	4.55	.64	.83	.98
71°F (22°C)	1200	565	46.3	13.6	3.29	.43	.55	.68	44.6	13.1	3.66	.43	.56	.69	42.8	12.5	4.09	.43	.57	.70	40.9	12.0	4.57	.44	.58	.72
	1400	660	47.2	13.8	3.31	.43	.57	.72	45.4	13.3	3.68	.44	.58	.73	43.6	12.8	4.11	.44	.59	.75	41.6	12.2	4.59	.44	.60	.76
	1600	755	47.9	14.0	3.32	.44	.60	.75	46.1	13.5	3.70	.44	.61	.77	44.2	13.0	4.12	.45	.62	.79	42.1	12.3	4.61	.45	.63	.81

RATINGS

NOTE - For Temperatures and Capacities not shown in tables, see bulletin - Cooling Unit Rating Table Correction Factor Data in Miscellaneous Engineering Data section.

Entering Wet Bulb Temperature	Total Air Volume		Outdoor Air Temperature Entering Outdoor Coil																							
			85°F (29°C)						95°F (35°C)						105°F (41°C)						115°F (46°C)					
			Total Cooling Capacity		Comp Motor kW Input	Sensible To Total Ratio (S/T) Dry Bulb			Total Cooling Capacity		Comp Motor kW Input	Sensible To Total Ratio (S/T) Dry Bulb			Total Cooling Capacity		Comp Motor kW Input	Sensible To Total Ratio (S/T) Dry Bulb			Total Cooling Capacity		Comp Motor kW Input	Sensible To Total Ratio (S/T) Dry Bulb		
	cfm	L/s	kBtuh	kW		75°F 24°C	80°F 27°C	85°F 29°C	kBtuh	kW		75°F 24°C	80°F 27°C	85°F 29°C	kBtuh	kW		75°F 24°C	80°F 27°C	85°F 29°C	kBtuh	kW		75°F 24°C	80°F 27°C	85°F 29°C
10ACC-042 — C26-51/65 COOLING CAPACITY																										
63°F (17°C)	1200	565	41.0	12.0	3.20	.73	.88	.99	39.4	11.5	3.56	.75	.89	1.00	37.8	11.1	3.98	.76	.91	1.00	36.1	10.6	4.44	.78	.93	1.00
	1400	660	42.1	12.3	3.22	.77	.92	1.00	40.5	11.9	3.58	.79	.94	1.00	38.8	11.4	4.00	.80	.96	1.00	37.1	10.9	4.47	.82	.98	1.00
	1600	755	43.0	12.6	3.24	.81	.97	1.00	41.4	12.1	3.60	.83	.98	1.00	39.8	11.7	4.02	.85	.99	1.00	38.1	11.2	4.50	.87	1.00	1.00
67°F (19°C)	1200	565	43.5	12.7	3.25	.57	.71	.84	41.9	12.3	3.62	.58	.72	.86	40.0	11.7	4.04	.59	.74	.88	38.2	11.2	4.50	.60	.75	.90
	1400	660	44.5	13.0	3.27	.60	.75	.90	42.7	12.5	3.63	.60	.77	.91	40.9	12.0	4.05	.62	.78	.93	39.0	11.4	4.53	.63	.80	.95
	1600	755	45.2	13.2	3.28	.62	.79	.94	43.4	12.7	3.65	.63	.81	.96	41.5	12.2	4.07	.64	.83	.98	39.5	11.6	4.55	.65	.85	1.00
71°F (22°C)	1200	565	46.4	13.6	3.30	.43	.56	.69	44.6	13.1	3.68	.43	.57	.70	42.6	12.5	4.10	.43	.58	.71	40.7	11.9	4.58	.44	.58	.73
	1400	660	47.2	13.8	3.32	.44	.58	.73	45.4	13.3	3.69	.44	.59	.74	43.4	12.7	4.12	.44	.60	.76	41.4	12.1	4.60	.45	.61	.78
	1600	755	48.0	14.1	3.33	.45	.61	.77	46.0	13.5	3.71	.45	.62	.79	44.0	12.9	4.13	.45	.63	.80	41.9	12.3	4.62	.46	.65	.83
10ACC-042 — C33-42B WITH G60UHV-60C-090 COOLING CAPACITY																										
63°F (17°C)	1335	630	39.9	11.7	3.18	.77	.91	1.00	38.4	11.3	3.55	.78	.93	1.00	36.9	10.8	3.96	.79	.95	1.00	35.4	10.4	4.42	.81	.96	1.00
	1440	680	40.3	11.8	3.19	.78	.93	1.00	38.9	11.4	3.56	.80	.95	1.00	37.4	11.0	3.97	.82	.96	1.00	35.8	10.5	4.44	.83	.98	1.00
	1595	755	40.9	12.0	3.20	.81	.96	1.00	39.5	11.6	3.57	.83	.97	1.00	38.0	11.1	3.98	.84	.99	1.00	36.5	10.7	4.46	.86	1.00	1.00
67°F (19°C)	1335	630	42.0	12.3	3.22	.59	.74	.88	40.5	11.9	3.58	.60	.76	.90	38.8	11.4	4.00	.61	.77	.92	37.1	10.9	4.48	.62	.79	.94
	1440	680	42.4	12.4	3.22	.60	.76	.91	40.8	12.0	3.59	.61	.78	.92	39.1	11.5	4.01	.62	.79	.94	37.4	11.0	4.49	.63	.81	.96
	1595	755	42.8	12.5	3.23	.62	.79	.94	41.2	12.1	3.60	.63	.81	.95	39.6	11.6	4.02	.64	.82	.97	37.8	11.1	4.49	.65	.84	.98
71°F (22°C)	1335	630	44.6	13.1	3.27	.43	.58	.72	42.9	12.6	3.63	.44	.59	.73	41.2	12.1	4.06	.44	.59	.75	39.4	11.5	4.54	.44	.61	.77
	1440	680	44.9	13.2	3.27	.44	.59	.74	43.2	12.7	3.64	.44	.60	.76	41.5	12.2	4.06	.45	.61	.77	39.6	11.6	4.55	.45	.62	.79
	1595	755	45.3	13.3	3.28	.45	.61	.77	43.6	12.8	3.65	.45	.62	.79	41.9	12.3	4.07	.45	.63	.80	40.0	11.7	4.56	.46	.65	.82
10ACC-042 — C33-44C WITH G60UHV-60C-090 - C33-48B/C WITH G60UHV-60C-090 COOLING CAPACITY																										
63°F (17°C)	1335	630	41.6	12.2	3.21	.75	.90	1.00	40.1	11.8	3.57	.76	.91	1.00	38.5	11.3	3.99	.78	.93	1.00	36.8	10.8	4.46	.80	.95	1.00
	1440	680	42.1	12.3	3.22	.77	.92	1.00	40.5	11.9	3.58	.78	.94	1.00	38.9	11.4	4.00	.80	.95	1.00	37.2	10.9	4.47	.82	.97	1.00
	1595	755	42.8	12.5	3.23	.79	.95	1.00	41.2	12.1	3.60	.81	.96	1.00	39.6	11.6	4.02	.83	.98	1.00	37.9	11.1	4.49	.85	.99	1.00
67°F (19°C)	1335	630	44.1	12.9	3.25	.58	.73	.87	42.4	12.4	3.62	.59	.74	.88	40.6	11.9	4.04	.60	.76	.90	38.8	11.4	4.52	.61	.77	.92
	1440	680	44.5	13.0	3.26	.59	.75	.89	42.8	12.5	3.63	.60	.76	.91	41.0	12.0	4.05	.61	.78	.93	39.1	11.5	4.53	.62	.80	.95
	1595	755	45.0	13.2	3.27	.61	.77	.92	43.3	12.7	3.64	.62	.79	.94	41.5	12.2	4.07	.63	.80	.96	39.6	11.6	4.55	.64	.83	.98
71°F (22°C)	1335	630	46.8	13.7	3.30	.43	.57	.70	45.1	13.2	3.68	.43	.57	.72	43.2	12.7	4.10	.44	.59	.73	41.3	12.1	4.59	.44	.60	.75
	1440	680	47.3	13.9	3.31	.44	.58	.72	45.5	13.3	3.69	.44	.59	.74	43.6	12.8	4.11	.44	.60	.75	41.6	12.2	4.60	.45	.61	.77
	1595	755	47.8	14.0	3.32	.44	.60	.75	45.9	13.5	3.70	.44	.61	.77	44.0	12.9	4.12	.45	.62	.78	42.0	12.3	4.62	.45	.63	.81
10ACC-042 — C23-46 WITH G32V5-100 COOLING CAPACITY																										
63°F (17°C)	1200	565	38.4	11.3	3.16	.73	.87	.98	37.0	10.8	3.52	.74	.88	.99	35.6	10.4	3.93	.75	.90	1.00	34.0	10.0	4.39	.77	.92	1.00
	1400	660	39.3	11.5	3.17	.76	.91	1.00	37.9	11.1	3.54	.78	.93	1.00	36.4	10.7	3.95	.79	.95	1.00	34.9	10.2	4.41	.81	.96	1.00
	1600	755	40.1	11.8	3.19	.80	.95	1.00	38.6	11.3	3.55	.81	.97	1.00	37.2	10.9	3.96	.83	.98	1.00	35.6	10.4	4.43	.85	.99	1.00
67°F (19°C)	1200	565	40.7	11.9	3.19	.57	.71	.84	39.2	11.5	3.56	.58	.72	.85	37.6	11.0	3.97	.59	.73	.87	36.0	10.6	4.44	.59	.75	.89
	1400	660	41.4	12.1	3.21	.59	.74	.89	39.9	11.7	3.57	.60	.76	.90	38.3	11.2	3.99	.61	.77	.92	36.6	10.7	4.47	.62	.79	.94
	1600	755	42.1	12.3	3.22	.61	.78	.93	40.5	11.9	3.59	.62	.79	.94	38.8	11.4	4.01	.63	.81	.96	37.1	10.9	4.48	.64	.83	.98
71°F (22°C)	1200	565	43.2	12.7	3.24	.43	.56	.68	41.6	12.2	3.61	.43	.56	.69	40.0	11.7	4.03	.43	.57	.71	38.2	11.2	4.51	.43	.58	.73
	1400	660	44.0	12.9	3.26	.43	.58	.72	42.4	12.4	3.62	.44	.58	.74	40.7	11.9	4.05	.44	.59	.75	38.8	11.4	4.53	.45	.61	.77
	1600	755	44.6	13.1	3.27	.44	.60	.76	42.9	12.6	3.64	.45	.61	.77	41.2	12.1	4.06	.45	.62	.79	39.3	11.5	4.54	.46	.63	.81
10ACC-042 — C26-41 WITH G32V5-100 COOLING CAPACITY																										
63°F (17°C)	1100	520	38.9	11.4	3.16	.72	.86	.97	37.5	11.0	3.53	.73	.87	.98	36.0	10.6	3.93	.74	.89	.99	34.4	10.1	4.39	.76	.90	1.00
	1200	565	39.5	11.6	3.17	.74	.88	.99	38.0	11.1	3.53	.75	.90	1.00	36.5	10.7	3.94	.77	.91	1.00	34.9	10.2	4.41	.78	.93	1.00
	1300	615	40.0	11.7	3.18	.76	.91	1.00	38.5	11.3	3.54	.77	.92	1.00	37.0	10.8	3.96	.79	.94	1.00	35.4	10.4	4.42	.81	.96	1.00
67°F (19°C)	1100	520	41.3	12.1	3.20	.56	.69	.82	39.7	11.6	3.57	.57	.71	.84	38.1	11.2	3.99	.58	.72	.85	36.4	10.7	4.45	.59	.73	.87
	1200	565	41.8	12.3	3.21	.58	.72	.85	40.2	11.8	3.58	.58	.73	.87	38.5	11.3	4.00	.59	.74	.88	36.8	10.8	4.47	.60	.76	.90
	1300	615	42.2	12.4	3.23	.59	.73	.87	40.6	11.9	3.59	.60	.75	.89	39.0	11.4	4.01	.60	.76	.91	37.2	10.9	4.48	.61	.78	.93
71°F (22°C)	1100	520	43.9	12.9	3.25	.43	.55	.67	42.3	12.4	3.62	.43	.56	.68	40.5	11.9	4.05	.43	.56	.70	38.7	11.3	4.52	.43	.57	.71
	1200	565	44.4	13.0	3.26	.43	.56	.69	42.7	12.5	3.64	.43	.57	.70	41.0	12.0	4.06	.43	.58	.72	39.1	11.5	4.54	.44	.59	.73
	1300	615	44.9	13.2	3.27	.43	.57	.71	43.1	12.6	3.65	.44	.58	.72	41.4	12.1	4.07	.44	.59	.74	39.5	11.6	4.54	.44	.60	.76
10ACC-042 — C26-46 WITH G32V5-125 COOLING CAPACITY																										
63°F (17°C)	1100	520	38.5	11.3	3.15	.72	.85	.97	37.1	10.9	3.51	.73	.87	.98	35.6	10.4	3.92	.74	.88	1.00	34.0	10.0	4.38	.75	.90	1.00
	1300	615	39.6	11.6	3.17	.76	.90	1.00	38.1	11.2	3.53	.77	.92	1.00	36.6	10.7	3.95	.78	.94	1.00	34.9	10.2	4.41	.80	.96	1.00
	1500	710	40.6	11.9	3.19	.80	.95	1.00	39.1	11.5	3.55	.81	.96	1.00	37.5	11.0	3.97	.83	.98	1.00	35.9	10.5	4.43	.84	.99	1.00
67°F (19°C)	1100	520	40.9	12.0	3.20	.56	.69	.82	39.4	11.5	3.56	.57	.70	.84	37.7	11.0	3.97	.58	.72	.85	36.0	10.6	4.45	.59	.73	.87
	1300	615	41.9	12.3	3.22	.59	.73	.87	40.3	11.8	3.58	.59	.75	.89	38.6	11.3	4.00	.60	.76	.91	36.8	10.8	4.47	.61	.78	.93
	1500	710	42.7	12.5	3.23	.61	.77	.92	41.0	12.0	3.60	.62	.79	.94	39.2	11.5	4.02	.63	.81	.96	37.4	11.0	4.49	.64	.83	.98
71°F (22°C)	1100	520	43.5	12.7	3.25	.43	.55	.67	41.9	12.3	3.62	.43	.55	.68	40.2	11.8	4.04	.43	.56	.69	38.3	11.2	4.52	.43	.57	.71
	1300	615	44.5	13.0	3.27	.43	.57	.71	42.8	12.5	3.64	.43	.58	.72	41.0	12.0	4.06	.44	.59	.74	39.1	11.5	4.54	.44	.60	.76
	1500	710	45.3	13.3	3.29	.44	.60	.75	43.5	12.7	3.66	.44	.61	.77	41.6	12.2	4.08	.45	.62	.78	39.7	11.6	4.56	.45	.63	.80
10ACC-042 — C23-51 WITH G32V5-100 - C26-51 with G32V5-100 COOLING CAPACITY																										
63°F (17°C)	1200	565	40.7	11.9	3.20	.73	.87	.98	39.2	11.5	3.56	.74	.89	.99	37.6	11.0	3.97	.75	.90	1.00	35.9	10.5	4.44	.77	.92	1.00
	1400	660	41.7	12.2	3.21	.77	.92	1.00	40.2	11.8	3.58	.78	.93	1.00	38.5	11.3	4.00	.79	.95	1.00	36.8	10.8	4.47	.81	.97	1.00
	1600	755	42.6	12.5	3.23	.80	.96	1.00	41.0	12.0	3.60	.82	.97	1.00	39.4	11.5	4.02	.83	.98	1.00	37.8	11.1	4.49	.85	1.00	1.00
67°F (19°C)	1200	565	43.2	12.7	3.24	.57	.71	.84	41.5	12.2	3.61	.58	.72	.85	39.8	11.7	4.03	.59	.73	.87	38.0	11.1	4.50	.59	.75	.89
	1400	660	44.1	12.9	3.26	.59	.74	.88	42.4	12.4	3.63	.60	.76	.90	40.6	11.9	4.05	.61	.77	.92	38.7	11.3	4.53	.62	.79	.94
	1600	755	44.8	13.1	3.27	.61	.78	.93	43.0	12.6	3.64	.62	.80	.95	41.2	12.1	4.07	.63	.81	.96	39.3	11.5	4.55	.65	.83	.98
71°F (22°C)	1200	565	45.9	13.5	3.29	.43	.56	.68	44.2	13.0	3.67	.43	.56	.69	42.4	12.4	4.09	.43	.57	.71	40.5	11.9	4.57	.43	.58	.72
	1400	660	46.8	13.7	3.31	.43	.58	.72	45.1	13.2	3.68	.44	.59	.73	43.2	12.7	4.11	.44	.59	.75	41.2	12.1	4.60	.44	.61	.77
	1600	755	47.5	13.9	3.32	.44	.60	.76	45.7	13.4	3.70	.45	.61	.77	43.7	12.8	4.13	.45	.62	.79	41.7	12.2	4.61	.46	.64	.81

RATINGS

NOTE - For Temperatures and Capacities not shown in tables, see bulletin - Cooling Unit Rating Table Correction Factor Data in Miscellaneous Engineering Data section.

Entering Wet Bulb Temperature	Total Air Volume		Outdoor Air Temperature Entering Outdoor Coil																							
			85°F (29°C)						95°F (35°C)						105°F (41°C)						115°F (46°C)					
			Total Cooling Capacity		Comp Motor kW Input	Sensible To Total Ratio (S/T) Dry Bulb			Total Cooling Capacity		Comp Motor kW Input	Sensible To Total Ratio (S/T) Dry Bulb			Total Cooling Capacity		Comp Motor kW Input	Sensible To Total Ratio (S/T) Dry Bulb			Total Cooling Capacity		Comp Motor kW Input	Sensible To Total Ratio (S/T) Dry Bulb		
	cfm	L/s	kBtuh	kW		75°F 24°C	80°F 27°C	85°F 29°C	kBtuh	kW		75°F 24°C	80°F 27°C	85°F 29°C	kBtuh	kW		75°F 24°C	80°F 27°C	85°F 29°C	kBtuh	kW		75°F 24°C	80°F 27°C	85°F 29°C
10ACC-042 — CR26-48N/W WITH GHR32V5-100 - CH23-51 WITH GHR32V5-100 COOLING CAPACITY																										
63°F (17°C)	1120	530	40.1	11.8	3.18	.72	.85	.97	38.6	11.3	3.54	.73	.87	.98	37.0	10.8	3.96	.74	.88	.99	35.4	10.4	4.42	.76	.90	1.00
	1335	630	41.2	12.1	3.20	.76	.90	1.00	39.7	11.6	3.56	.77	.92	1.00	38.1	11.2	3.98	.78	.94	1.00	36.4	10.7	4.45	.80	.96	1.00
	1465	690	41.8	12.3	3.21	.78	.93	1.00	40.3	11.8	3.57	.79	.95	1.00	38.7	11.3	3.99	.81	.96	1.00	37.0	10.8	4.46	.83	.98	1.00
67°F (19°C)	1120	530	42.6	12.5	3.22	.56	.69	.82	41.0	12.0	3.59	.57	.70	.83	39.3	11.5	4.01	.58	.72	.85	37.5	11.0	4.48	.59	.73	.87
	1335	630	43.6	12.8	3.24	.58	.73	.87	41.9	12.3	3.61	.59	.75	.89	40.2	11.8	4.03	.60	.76	.91	38.4	11.3	4.50	.61	.78	.93
	1465	690	44.1	12.9	3.25	.60	.76	.90	42.4	12.4	3.62	.61	.77	.92	40.6	11.9	4.04	.62	.79	.94	38.8	11.4	4.52	.63	.81	.96
71°F (22°C)	1120	530	45.2	13.2	3.27	.42	.55	.67	43.6	12.8	3.64	.43	.55	.68	41.8	12.3	4.07	.43	.56	.69	40.0	11.7	4.55	.43	.57	.71
	1335	630	46.3	13.6	3.29	.43	.57	.71	44.5	13.0	3.67	.44	.58	.72	42.7	12.5	4.09	.44	.59	.74	40.8	12.0	4.57	.44	.60	.76
	1465	690	46.8	13.7	3.30	.44	.59	.73	45.0	13.2	3.68	.44	.60	.75	43.1	12.6	4.10	.45	.61	.77	41.2	12.1	4.58	.45	.62	.79
10ACC-042 — CH33-42B-2F - CH33-44/48B-2F COOLING CAPACITY																										
63°F (17°C)	1100	520	40.2	11.8	3.19	.71	.84	.96	38.7	11.3	3.55	.72	.86	.97	37.1	10.9	3.97	.73	.87	.99	35.5	10.4	4.43	.75	.89	1.00
	1300	615	41.3	12.1	3.21	.74	.89	.99	39.7	11.6	3.58	.76	.91	1.00	38.1	11.2	3.99	.77	.92	1.00	36.5	10.7	4.46	.79	.94	1.00
	1500	710	42.2	12.4	3.23	.78	.93	1.00	40.6	11.9	3.59	.79	.95	1.00	39.0	11.4	4.01	.81	.96	1.00	37.4	11.0	4.48	.83	.98	1.00
67°F (19°C)	1100	520	42.7	12.5	3.23	.56	.69	.81	41.1	12.0	3.60	.57	.70	.82	39.5	11.6	4.02	.57	.71	.84	37.7	11.0	4.50	.58	.72	.86
	1300	615	43.7	12.8	3.25	.58	.72	.86	42.1	12.3	3.62	.59	.73	.87	40.3	11.8	4.05	.60	.75	.89	38.5	11.3	4.52	.61	.77	.91
	1500	710	44.5	13.0	3.27	.60	.76	.90	42.8	12.5	3.64	.61	.77	.92	41.0	12.0	4.06	.62	.79	.94	39.2	11.5	4.54	.63	.81	.96
71°F (22°C)	1100	520	45.5	13.3	3.28	.42	.54	.66	43.8	12.8	3.66	.42	.55	.67	42.0	12.3	4.08	.43	.55	.68	40.2	11.8	4.57	.43	.56	.70
	1300	615	46.5	13.6	3.30	.43	.56	.70	44.7	13.1	3.68	.43	.57	.71	42.9	12.6	4.11	.44	.58	.72	41.0	12.0	4.59	.44	.59	.74
	1500	710	47.2	13.8	3.32	.44	.59	.74	45.4	13.3	3.69	.44	.59	.75	43.6	12.8	4.12	.44	.61	.77	41.6	12.2	4.60	.45	.62	.79
10ACC-042 — CH23-41 - CH23-51 COOLING CAPACITY																										
63°F (17°C)	1200	565	40.6	11.9	3.19	.74	.88	.99	39.1	11.5	3.55	.75	.89	1.00	37.6	11.0	3.96	.76	.91	1.00	36.0	10.6	4.43	.78	.93	1.00
	1400	660	41.6	12.2	3.21	.77	.92	1.00	40.1	11.8	3.57	.79	.94	1.00	38.5	11.3	3.98	.80	.96	1.00	36.9	10.8	4.45	.82	.97	1.00
	1600	755	42.5	12.5	3.22	.81	.96	1.00	41.0	12.0	3.58	.82	.97	1.00	39.4	11.5	4.00	.84	.99	1.00	37.8	11.1	4.48	.86	1.00	1.00
67°F (19°C)	1200	565	43.0	12.6	3.22	.57	.71	.85	41.4	12.1	3.59	.58	.72	.86	39.7	11.6	4.02	.59	.74	.88	37.9	11.1	4.49	.60	.75	.90
	1400	660	43.8	12.8	3.24	.60	.75	.89	42.2	12.4	3.61	.60	.77	.91	40.4	11.8	4.03	.61	.78	.93	38.6	11.3	4.50	.62	.80	.95
	1600	755	44.5	13.0	3.25	.62	.79	.94	42.8	12.5	3.62	.63	.80	.95	41.1	12.0	4.04	.64	.82	.97	39.2	11.5	4.52	.65	.84	.99
71°F (22°C)	1200	565	45.7	13.4	3.27	.43	.56	.69	44.0	12.9	3.64	.43	.57	.70	42.2	12.4	4.07	.43	.58	.72	40.3	11.8	4.55	.44	.59	.73
	1400	660	46.5	13.6	3.29	.44	.58	.73	44.8	13.1	3.66	.44	.59	.74	42.9	12.6	4.09	.44	.60	.76	41.0	12.0	4.57	.45	.61	.78
	1600	755	47.1	13.8	3.30	.45	.61	.77	45.3	13.3	3.68	.45	.62	.78	43.5	12.7	4.10	.45	.63	.80	41.5	12.2	4.58	.46	.64	.82
10ACC-042 — CH33-48C-2F COOLING CAPACITY																										
63°F (17°C)	1200	565	41.8	12.3	3.21	.73	.87	.98	40.3	11.8	3.57	.74	.88	.99	38.6	11.3	3.98	.75	.90	1.00	36.9	10.8	4.46	.77	.92	1.00
	1400	660	42.9	12.6	3.22	.76	.91	1.00	41.3	12.1	3.59	.78	.93	1.00	39.6	11.6	4.01	.79	.95	1.00	37.8	11.1	4.48	.81	.97	1.00
	1600	755	43.8	12.8	3.24	.80	.95	1.00	42.2	12.4	3.61	.81	.97	1.00	40.5	11.9	4.03	.83	.98	1.00	38.8	11.4	4.50	.85	.99	1.00
67°F (19°C)	1200	565	44.5	13.0	3.25	.57	.70	.83	42.8	12.5	3.62	.57	.71	.85	41.0	12.0	4.04	.58	.73	.87	39.1	11.5	4.52	.59	.74	.89
	1400	660	45.4	13.3	3.27	.59	.74	.88	43.7	12.8	3.64	.60	.75	.90	41.8	12.3	4.07	.61	.77	.92	39.8	11.7	4.55	.62	.79	.94
	1600	755	46.2	13.5	3.29	.61	.77	.92	44.4	13.0	3.66	.62	.79	.94	42.5	12.5	4.08	.63	.81	.96	40.5	11.9	4.56	.64	.83	.98
71°F (22°C)	1200	565	47.3	13.9	3.31	.43	.55	.68	45.5	13.3	3.68	.43	.56	.69	43.7	12.8	4.10	.43	.57	.70	41.7	12.2	4.59	.43	.58	.72
	1400	660	48.3	14.2	3.32	.43	.57	.71	46.5	13.6	3.70	.44	.58	.73	44.5	13.0	4.13	.44	.59	.74	42.4	12.4	4.62	.44	.60	.76
	1600	755	49.0	14.4	3.34	.44	.60	.75	47.1	13.8	3.72	.45	.61	.77	45.1	13.2	4.14	.45	.62	.79	43.0	12.6	4.63	.45	.63	.81
10ACC-042 — CH33-42B WITH G60UHV-60C-090 - CH33-44/48B WITH G60UHV-60C-090 COOLING CAPACITY																										
63°F (17°C)	1335	630	41.3	12.1	3.21	.75	.90	1.00	39.8	11.7	3.57	.76	.91	1.00	38.2	11.2	3.98	.78	.93	1.00	36.6	10.7	4.46	.80	.95	1.00
	1435	675	41.8	12.3	3.21	.77	.92	1.00	40.3	11.8	3.58	.78	.93	1.00	38.7	11.3	3.99	.80	.95	1.00	37.0	10.8	4.47	.82	.97	1.00
67°F (19°C)	1335	630	43.8	12.8	3.25	.58	.73	.87	42.1	12.3	3.62	.59	.74	.88	40.4	11.8	4.04	.60	.75	.90	38.6	11.3	4.51	.61	.77	.92
	1435	675	44.2	13.0	3.25	.59	.74	.89	42.5	12.5	3.63	.60	.76	.90	40.7	11.9	4.04	.61	.78	.92	38.9	11.4	4.52	.62	.79	.94
71°F (22°C)	1335	630	46.5	13.6	3.30	.43	.57	.70	44.8	13.1	3.67	.43	.58	.72	42.9	12.6	4.10	.44	.59	.73	41.0	12.0	4.58	.44	.60	.75
	1435	675	46.9	13.7	3.30	.43	.58	.72	45.1	13.2	3.68	.44	.59	.74	43.3	12.7	4.10	.44	.60	.75	41.3	12.1	4.59	.45	.61	.77
10ACC-042 — CH33-48C-2F WITH G60UHV-60C-090 COOLING CAPACITY																										
63°F (17°C)	1335	630	42.6	12.5	3.22	.75	.90	1.00	41.0	12.0	3.59	.76	.91	1.00	39.3	11.5	4.00	.78	.93	1.00	37.5	11.0	4.48	.80	.95	1.00
	1435	675	43.1	12.6	3.23	.77	.92	1.00	41.5	12.2	3.60	.78	.93	1.00	39.8	11.7	4.01	.80	.95	1.00	38.0	11.1	4.49	.81	.97	1.00
	1595	755	43.8	12.8	3.24	.79	.95	1.00	42.2	12.4	3.61	.81	.97	1.00	40.5	11.9	4.03	.83	.98	1.00	38.7	11.3	4.50	.85	1.00	1.00
67°F (19°C)	1335	630	45.2	13.2	3.26	.58	.73	.87	43.4	12.7	3.63	.59	.74	.88	41.6	12.2	4.06	.60	.75	.90	39.6	11.6	4.54	.61	.77	.92
	1435	675	45.6	13.4	3.27	.59	.74	.89	43.8	12.8	3.65	.60	.76	.90	41.9	12.3	4.07	.61	.78	.92	40.0	11.7	4.55	.62	.79	.95
	1595	755	46.2	13.5	3.29	.61	.77	.92	44.4	13.0	3.66	.62	.79	.94	42.4	12.4	4.08	.63	.81	.96	40.5	11.9	4.56	.64	.83	.98
71°F (22°C)	1335	630	48.0	14.1	3.32	.43	.57	.70	46.2	13.5	3.69	.43	.58	.72	44.2	13.0	4.12	.44	.59	.73	42.2	12.4	4.61	.44	.59	.75
	1435	675	48.4	14.2	3.33	.44	.58	.72	46.6	13.7	3.70	.44	.59	.74	44.6	13.1	4.13	.44	.60	.75	42.5	12.5	4.62	.45	.61	.77
	1595	755	49.0	14.4	3.34	.44	.60	.75	47.1	13.8	3.72	.45	.61	.77	45.1	13.2	4.14	.45	.62	.78	43.0	12.6	4.63	.45	.63	.81
10ACC-042 — CH23-41 WITH GHR32V5-100 COOLING CAPACITY																										
63°F (17°C)	1120	530	39.7	11.6	3.17	.72	.86	.97	38.2	11.2	3.53	.73	.87	.98	36.7	10.8	3.95	.75	.89	.99	35.1	10.3	4.41	.76	.91	1.00
	1335	630	40.8	12.0	3.19	.76	.91	1.00	39.3	11.5	3.56	.77	.92	1.00	37.8	11.1	3.96	.79	.94	1.00	36.2	10.6	4.43	.81	.96	1.00
	1465	690	41.4	12.1	3.20	.79	.93	1.00	39.9	11.7	3.56	.80	.95	1.00	38.4	11.3	3.98	.81	.97	1.00	36.7	10.8	4.45	.83	.98	1.00
67°F (19°C)	1120	530	42.1	12.3	3.21	.57	.70	.82	40.5	11.9	3.58	.57	.71	.84	38.9	11.4	3.99	.58	.72	.86	37.2	10.9	4.47	.59	.74	.88
	1335	630	43.0	12.6	3.23	.59	.74	.88	41.4	12.1	3.60	.60	.75	.90	39.7	11.6	4.02	.61	.77	.91	38.0	11.1	4.49	.62	.78	.93
	1465	690	43.5	12.7	3.24	.60	.76	.91	41.9	12.3	3.61	.61	.78	.92	40.2	11.8	4.03	.62	.79	.94	38.4	11.3	4.50	.63	.81	.96
71°F (22°C)	1120	530	44.7	13.1	3.26	.43	.55	.67	43.1	12.6	3.63	.43	.56	.68	41.3	12.1	4.05	.43	.56	.70	39.5	11.6	4.54	.43	.57	.71
	1335	630	45.7	13.4	3.27	.43	.58	.72	44.0	12.9	3.65	.44	.58	.73	42.2	12.4	4.08	.44	.59	.75	40.3	11.8	4.56	.44	.61	.76
	1465	690	46.2	13.5	3.28	.44	.59	.74	44.4	13.0	3.66	.44	.60	.76	42.6	12.5	4.08	.45	.61	.77	40.7	11.9	4.56	.45	.62	.79

RATINGS

NOTE - For Temperatures and Capacities not shown in tables, see bulletin - Cooling Unit Rating Table Correction Factor Data in Miscellaneous Engineering Data section.

Entering Wet Bulb Temperature	Total Air Volume		Outdoor Air Temperature Entering Outdoor Coil																							
			85°F (29°C)						95°F (35°C)						105°F (41°C)						115°F (46°C)					
			Total Cooling Capacity		Comp Motor kW Input	Sensible To Total Ratio (S/T) Dry Bulb			Total Cooling Capacity		Comp Motor kW Input	Sensible To Total Ratio (S/T) Dry Bulb			Total Cooling Capacity		Comp Motor kW Input	Sensible To Total Ratio (S/T) Dry Bulb			Total Cooling Capacity		Comp Motor kW Input	Sensible To Total Ratio (S/T) Dry Bulb		
	cfm	L/s	kBtuh	kW		75°F 24°C	80°F 27°C	85°F 29°C	kBtuh	kW		75°F 24°C	80°F 27°C	85°F 29°C	kBtuh	kW		75°F 24°C	80°F 27°C	85°F 29°C	kBtuh	kW		75°F 24°C	80°F 27°C	85°F 29°C
10ACC-042 — CB29M-46 - CB28UH-042 COOLING CAPACITY																										
63°F (17°C)	1200	565	39.3	11.5	3.17	.73	.88	.99	37.9	11.1	3.53	.75	.89	1.00	36.3	10.6	3.94	.76	.91	1.00	34.8	10.2	4.40	.77	.93	1.00
	1350	635	40.0	11.7	3.18	.76	.91	1.00	38.6	11.3	3.54	.77	.92	1.00	37.0	10.8	3.96	.79	.94	1.00	35.4	10.4	4.42	.81	.96	1.00
	1500	710	40.7	11.9	3.19	.79	.94	1.00	39.2	11.5	3.56	.80	.96	1.00	37.7	11.0	3.97	.82	.97	1.00	36.1	10.6	4.44	.84	.99	1.00
67°F (19°C)	1200	565	41.7	12.2	3.21	.57	.71	.84	40.1	11.8	3.58	.58	.72	.86	38.4	11.3	3.99	.59	.74	.88	36.7	10.8	4.46	.60	.75	.90
	1350	635	42.3	12.4	3.23	.59	.74	.88	40.7	11.9	3.59	.60	.75	.90	39.0	11.4	4.00	.61	.77	.92	37.2	10.9	4.48	.62	.79	.94
	1500	710	42.8	12.5	3.24	.61	.77	.91	41.2	12.1	3.60	.61	.78	.93	39.5	11.6	4.02	.62	.80	.95	37.7	11.0	4.50	.64	.82	.97
71°F (22°C)	1200	565	44.3	13.0	3.26	.43	.56	.69	42.6	12.5	3.63	.43	.57	.70	40.9	12.0	4.05	.43	.57	.71	39.1	11.5	4.53	.44	.58	.73
	1350	635	44.9	13.2	3.27	.43	.57	.72	43.2	12.7	3.65	.44	.58	.73	41.4	12.1	4.07	.44	.59	.74	39.6	11.6	4.54	.44	.60	.76
	1500	710	45.5	13.3	3.28	.44	.59	.75	43.7	12.8	3.66	.44	.60	.76	41.9	12.3	4.08	.45	.61	.78	39.9	11.7	4.56	.45	.63	.80
10ACC-042 — CB30M-41 - CB30U-41/46 COOLING CAPACITY																										
63°F (17°C)	1050	495	38.5	11.3	3.15	.71	.84	.95	37.1	10.9	3.52	.72	.85	.97	35.6	10.4	3.92	.73	.87	.98	34.0	10.0	4.38	.74	.89	1.00
	1250	590	39.7	11.6	3.17	.74	.88	1.00	38.2	11.2	3.54	.76	.90	1.00	36.6	10.7	3.95	.77	.92	1.00	35.0	10.3	4.42	.79	.94	1.00
	1450	685	40.6	11.9	3.19	.78	.93	1.00	39.1	11.5	3.56	.79	.95	1.00	37.5	11.0	3.97	.81	.97	1.00	35.8	10.5	4.44	.83	.98	1.00
67°F (19°C)	1050	495	41.0	12.0	3.20	.56	.68	.80	39.4	11.5	3.57	.56	.69	.82	37.8	11.1	3.98	.57	.70	.83	36.1	10.6	4.45	.58	.72	.85
	1250	590	42.0	12.3	3.22	.58	.72	.85	40.4	11.8	3.59	.59	.73	.87	38.7	11.3	4.00	.59	.75	.89	36.9	10.8	4.48	.60	.76	.91
	1450	685	42.8	12.5	3.24	.60	.76	.90	41.1	12.0	3.60	.61	.77	.92	39.4	11.5	4.02	.62	.79	.94	37.5	11.0	4.50	.63	.81	.96
71°F (22°C)	1050	495	43.6	12.8	3.25	.42	.54	.66	42.0	12.3	3.62	.42	.55	.67	40.2	11.8	4.04	.43	.55	.68	38.5	11.3	4.52	.43	.56	.69
	1250	590	44.7	13.1	3.27	.43	.56	.70	43.0	12.6	3.64	.43	.57	.71	41.2	12.1	4.06	.43	.58	.72	39.3	11.5	4.55	.44	.59	.74
	1450	685	45.4	13.3	3.29	.44	.59	.74	43.7	12.8	3.66	.44	.59	.75	41.8	12.3	4.09	.44	.61	.77	39.9	11.7	4.56	.45	.62	.79
10ACC-042 — CB30M-46 COOLING CAPACITY																										
63°F (17°C)	1250	590	40.1	11.8	3.17	.74	.89	1.00	38.5	11.3	3.54	.75	.90	1.00	37.0	10.8	3.95	.77	.92	1.00	35.3	10.3	4.42	.79	.94	1.00
	1400	660	40.8	12.0	3.19	.77	.92	1.00	39.2	11.5	3.55	.78	.94	1.00	37.6	11.0	3.97	.80	.95	1.00	36.0	10.6	4.43	.82	.97	1.00
	1550	730	41.4	12.1	3.20	.80	.95	1.00	39.9	11.7	3.57	.81	.96	1.00	38.3	11.2	3.98	.83	.98	1.00	36.7	10.8	4.45	.85	.99	1.00
67°F (19°C)	1250	590	42.4	12.4	3.22	.58	.72	.85	40.8	12.0	3.59	.59	.73	.87	39.1	11.5	4.00	.59	.75	.89	37.3	10.9	4.48	.60	.76	.91
	1400	660	43.0	12.6	3.23	.60	.75	.89	41.4	12.1	3.60	.60	.76	.91	39.6	11.6	4.02	.61	.78	.93	37.8	11.1	4.49	.62	.80	.95
	1550	730	43.6	12.8	3.24	.61	.78	.92	41.9	12.3	3.61	.62	.79	.94	40.1	11.8	4.03	.63	.81	.96	38.2	11.2	4.50	.64	.83	.98
71°F (22°C)	1250	590	45.1	13.2	3.27	.43	.56	.69	43.4	12.7	3.64	.43	.57	.71	41.6	12.2	4.06	.44	.58	.72	39.7	11.6	4.55	.44	.59	.74
	1400	660	45.7	13.4	3.28	.44	.58	.72	44.0	12.9	3.65	.44	.59	.74	42.1	12.3	4.08	.44	.60	.76	40.1	11.8	4.56	.45	.61	.77
	1550	730	46.2	13.5	3.29	.44	.60	.75	44.4	13.0	3.67	.45	.61	.77	42.5	12.5	4.09	.45	.62	.79	40.5	11.9	4.57	.45	.63	.81
10ACC-042 — CB31MV-41 COOLING CAPACITY																										
63°F (17°C)	1265	595	40.1	11.8	3.17	.74	.89	1.00	38.6	11.3	3.54	.76	.91	1.00	37.0	10.8	3.95	.77	.92	1.00	35.4	10.4	4.42	.79	.94	1.00
	1400	660	40.8	12.0	3.19	.77	.92	1.00	39.2	11.5	3.55	.78	.94	1.00	37.6	11.0	3.97	.80	.95	1.00	36.0	10.6	4.43	.82	.97	1.00
	1545	730	41.4	12.1	3.20	.80	.95	1.00	39.8	11.7	3.56	.81	.97	1.00	38.3	11.2	3.98	.83	.98	1.00	36.6	10.7	4.45	.85	1.00	1.00
67°F (19°C)	1265	595	42.5	12.5	3.22	.58	.72	.86	40.9	12.0	3.59	.59	.73	.87	39.1	11.5	4.00	.60	.75	.89	37.3	10.9	4.48	.61	.77	.91
	1400	660	43.0	12.6	3.23	.60	.75	.89	41.4	12.1	3.60	.60	.76	.91	39.6	11.6	4.02	.61	.78	.93	37.8	11.1	4.49	.62	.80	.95
	1545	730	43.5	12.7	3.24	.61	.77	.92	41.8	12.3	3.61	.62	.79	.94	40.0	11.7	4.03	.63	.81	.96	38.2	11.2	4.50	.64	.83	.98
71°F (22°C)	1265	595	45.2	13.2	3.27	.43	.56	.70	43.5	12.7	3.64	.43	.57	.71	41.6	12.2	4.06	.44	.58	.73	39.7	11.6	4.55	.44	.59	.75
	1400	660	45.7	13.4	3.28	.44	.58	.72	43.9	12.9	3.65	.44	.59	.74	42.1	12.3	4.08	.44	.60	.76	40.1	11.8	4.56	.45	.61	.77
	1545	730	46.2	13.5	3.29	.44	.60	.75	44.4	13.0	3.67	.45	.61	.77	42.5	12.5	4.09	.45	.62	.79	40.5	11.9	4.57	.45	.63	.81
10ACC-042 — CB29M-51 - CB28UH-048 COOLING CAPACITY																										
63°F (17°C)	1200	565	40.9	12.0	3.20	.73	.87	.99	39.4	11.5	3.56	.74	.89	1.00	37.8	11.1	3.97	.76	.91	1.00	36.1	10.6	4.45	.78	.93	1.00
	1400	660	42.0	12.3	3.21	.77	.92	1.00	40.4	11.8	3.58	.79	.94	1.00	38.7	11.3	4.00	.80	.96	1.00	37.0	10.8	4.47	.82	.98	1.00
	1600	755	42.8	12.5	3.23	.81	.96	1.00	41.3	12.1	3.60	.82	.98	1.00	39.6	11.6	4.02	.84	.99	1.00	38.0	11.1	4.50	.86	1.00	1.00
67°F (19°C)	1200	565	43.4	12.7	3.24	.57	.71	.84	41.8	12.3	3.61	.58	.72	.86	40.0	11.7	4.03	.59	.74	.88	38.2	11.2	4.51	.60	.75	.90
	1400	660	44.3	13.0	3.26	.59	.75	.89	42.6	12.5	3.63	.60	.76	.91	40.8	12.0	4.05	.61	.78	.93	38.9	11.4	4.53	.62	.80	.95
	1600	755	45.0	13.2	3.27	.62	.78	.94	43.2	12.7	3.65	.63	.80	.95	41.4	12.1	4.07	.64	.82	.97	39.5	11.6	4.54	.65	.84	.99
71°F (22°C)	1200	565	46.2	13.5	3.30	.43	.56	.68	44.4	13.0	3.67	.43	.57	.70	42.6	12.5	4.09	.43	.57	.71	40.7	11.9	4.58	.43	.58	.73
	1400	660	47.1	13.8	3.31	.44	.58	.72	45.3	13.3	3.69	.44	.59	.74	43.3	12.7	4.12	.44	.60	.76	41.3	12.1	4.60	.45	.61	.78
	1600	755	47.8	14.0	3.32	.44	.60	.76	45.9	13.5	3.70	.45	.61	.78	43.9	12.9	4.13	.45	.63	.80	41.8	12.3	4.61	.46	.64	.82
10ACC-042 — CB30M-51 - CB30U-51 COOLING CAPACITY																										
63°F (17°C)	1200	565	41.6	12.2	3.20	.73	.87	.99	40.0	11.7	3.57	.74	.89	1.00	38.3	11.2	3.98	.76	.91	1.00	36.5	10.7	4.45	.77	.93	1.00
	1400	660	42.7	12.5	3.23	.77	.92	1.00	41.0	12.0	3.59	.78	.94	1.00	39.2	11.5	4.01	.80	.96	1.00	37.5	11.0	4.48	.82	.98	1.00
	1600	755	43.6	12.8	3.24	.81	.96	1.00	41.9	12.3	3.61	.82	.98	1.00	40.2	11.8	4.03	.84	1.00	1.00	38.5	11.3	4.50	.86	1.00	1.00
67°F (19°C)	1200	565	44.2	13.0	3.26	.57	.71	.84	42.4	12.4	3.63	.58	.72	.86	40.6	11.9	4.04	.59	.73	.88	38.7	11.3	4.51	.60	.75	.90
	1400	660	45.2	13.2	3.27	.59	.75	.89	43.4	12.7	3.64	.60	.76	.91	41.5	12.2	4.06	.61	.78	.93	39.5	11.6	4.54	.62	.80	.95
	1600	755	45.9	13.5	3.29	.62	.78	.94	44.1	12.9	3.66	.63	.80	.96	42.1	12.3	4.08	.64	.82	.97	40.1	11.8	4.56	.65	.84	.99
71°F (22°C)	1200	565	47.1	13.8	3.31	.43	.55	.68	45.2	13.2	3.69	.43	.56	.69	43.3	12.7	4.11	.43	.57	.71	41.3	12.1	4.59	.44	.58	.73
	1400	660	48.0	14.1	3.33	.44	.58	.72	46.1	13.5	3.70	.44	.59	.74	44.1	12.9	4.13	.44	.60	.76	42.0	12.3	4.61	.45	.61	.77
	1600	755	48.7	14.3	3.34	.44	.60	.76	46.8	13.7	3.72	.45	.61	.78	44.7	13.1	4.15	.45	.63	.80	42.5	12.5	4.63	.46	.64	.82
10ACC-042 — CB31MV-51 COOLING CAPACITY																										
63°F (17°C)	1205	570	41.6	12.2	3.21	.73	.87	.99	40.0	11.7	3.57	.74	.89	1.00	38.3	11.2	3.98	.76	.91	1.00	36.5	10.7	4.45	.77	.93	1.00
	1425	675	42.8	12.5	3.23	.77	.93	1.00	41.1	12.0	3.59	.79	.94	1.00	39.4	11.5	4.01	.81	.96	1.00	37.6	11.0	4.48	.82	.98	1.00
	1605	760	43.6	12.8	3.24	.81	.97	1.00	41.9	12.3	3.61	.82	.98	1.00	40.2	11.8	4.03	.84	1.00	1.00	38.6	11.3	4.50	.86	1.00	1.00
67°F (19°C)	1205	570	44.2	13.0	3.26	.57	.71	.84	42.5	12.5	3.63	.58	.72	.86	40.7	11.9	4.04	.59	.73	.88	38.8	11.4	4.52	.60	.75	.90
	1425	675	45.3	13.3	3.27	.60	.75	.90	43.5	12.7	3.64	.61	.77	.92	41.6	12.2	4.06	.61	.78	.94	39.6	11.6	4.54	.63	.80	.96
	1605	760	45.9	13.5	3.29	.62	.79	.94	44.1	12.9	3.66	.63	.80	.96	42.1	12.3	4.08	.64	.82	.98	40.1	11.8	4.56	.65	.84	1.00
71°F (22°C)	1205	570	47.1	13.8	3.31	.43	.56	.68	45.2	13.2	3.69	.43	.56	.70	43.3	12.7	4.11	.43	.57	.71	41.3	12.1	4.59	.44	.58	.73
	1425	675	48.1	14.1	3.33	.44	.58	.73	46.2	13.5	3.71	.44	.59	.74	44.2	13.0	4.13	.44	.60	.76	42.1	12.3	4.62	.45	.62	.78
	1605	760	48.7	14.3	3.34	.44	.61	.76	46.8	13.7	3.72	.45	.62	.78	44.7	13.1	4.15	.45	.63	.80	42.5	12.5	4.63	.46	.64	.82

RATINGS

NOTE - For Temperatures and Capacities not shown in tables, see bulletin - Cooling Unit Rating Table Correction Factor Data in Miscellaneous Engineering Data section.

Entering Wet Bulb Temperature	Total Air Volume		Outdoor Air Temperature Entering Outdoor Coil																							
			85°F (29°C)						95°F (35°C)						105°F (41°C)						115°F (46°C)					
			Total Cooling Capacity		Comp Motor kW Input	Sensible To Total Ratio (S/T) Dry Bulb			Total Cooling Capacity		Comp Motor kW Input	Sensible To Total Ratio (S/T) Dry Bulb			Total Cooling Capacity		Comp Motor kW Input	Sensible To Total Ratio (S/T) Dry Bulb			Total Cooling Capacity		Comp Motor kW Input	Sensible To Total Ratio (S/T) Dry Bulb		
	cfm	L/s	kBtuh	kW		75°F 24°C	80°F 27°C	85°F 29°C	kBtuh	kW		75°F 24°C	80°F 27°C	85°F 29°C	kBtuh	kW		75°F 24°C	80°F 27°C	85°F 29°C	kBtuh	kW		75°F 24°C	80°F 27°C	85°F 29°C
10ACC-048 — C26-41 COOLING CAPACITY																										
63°F (17°C)	1000	470	40.6	11.9	3.37	.68	.80	.91	39.2	11.5	3.76	.69	.81	.92	37.7	11.0	4.21	.69	.82	.93	36.1	10.6	4.73	.71	.84	.95
	1200	565	42.0	12.3	3.40	.71	.84	.96	40.5	11.9	3.79	.72	.86	.97	39.0	11.4	4.25	.73	.87	.98	37.3	10.9	4.77	.75	.89	1.00
	1400	660	43.1	12.6	3.43	.74	.88	.99	41.6	12.2	3.82	.76	.90	1.00	40.0	11.7	4.27	.77	.92	1.00	38.2	11.2	4.79	.79	.94	1.00
67°F (19°C)	1000	470	43.2	12.7	3.43	.54	.66	.76	41.7	12.2	3.82	.55	.66	.77	40.1	11.8	4.27	.55	.67	.79	38.4	11.3	4.80	.56	.68	.80
	1200	565	44.5	13.0	3.46	.56	.69	.81	43.0	12.6	3.85	.57	.70	.82	41.3	12.1	4.31	.57	.71	.84	39.4	11.5	4.84	.58	.72	.86
	1400	660	45.5	13.3	3.48	.58	.72	.86	43.9	12.9	3.88	.59	.73	.87	42.1	12.3	4.34	.59	.75	.89	40.3	11.8	4.86	.60	.76	.91
71°F (22°C)	1000	470	46.0	13.5	3.49	.42	.52	.63	44.5	13.0	3.89	.42	.53	.64	42.8	12.5	4.35	.42	.53	.65	40.9	12.0	4.89	.42	.54	.66
	1200	565	47.4	13.9	3.52	.42	.54	.66	45.7	13.4	3.93	.42	.55	.67	43.9	12.9	4.39	.43	.56	.68	41.9	12.3	4.93	.43	.57	.70
	1400	660	48.3	14.2	3.54	.43	.56	.70	46.6	13.7	3.95	.43	.57	.71	44.7	13.1	4.42	.44	.58	.72	42.7	12.5	4.95	.44	.59	.74
10ACC-048 — C26-46 COOLING CAPACITY																										
63°F (17°C)	1000	470	41.1	12.0	3.37	.68	.79	.90	39.7	11.6	3.76	.69	.80	.91	38.1	11.2	4.21	.69	.82	.93	36.4	10.7	4.73	.71	.84	.95
	1200	565	42.5	12.5	3.41	.71	.84	.95	41.0	12.0	3.80	.72	.85	.97	39.4	11.5	4.25	.73	.87	.98	37.7	11.0	4.76	.74	.89	.99
	1400	660	43.6	12.8	3.43	.74	.88	.99	42.1	12.3	3.82	.75	.90	1.00	40.5	11.9	4.27	.77	.91	1.00	38.6	11.3	4.80	.78	.94	1.00
67°F (19°C)	1000	470	43.8	12.8	3.43	.54	.65	.76	42.3	12.4	3.83	.55	.66	.77	40.6	11.9	4.28	.55	.67	.78	38.8	11.4	4.81	.56	.68	.80
	1200	565	45.2	13.2	3.46	.56	.68	.81	43.5	12.7	3.86	.57	.69	.82	41.8	12.3	4.32	.57	.71	.83	39.9	11.7	4.84	.58	.72	.85
	1400	660	46.2	13.5	3.49	.58	.72	.85	44.5	13.0	3.89	.58	.73	.87	42.7	12.5	4.35	.59	.74	.88	40.8	12.0	4.87	.60	.76	.91
71°F (22°C)	1000	470	46.6	13.7	3.50	.42	.52	.62	45.0	13.2	3.90	.42	.53	.63	43.3	12.7	4.36	.42	.53	.64	41.4	12.1	4.90	.42	.54	.65
	1200	565	48.0	14.1	3.53	.43	.54	.66	46.3	13.6	3.94	.43	.55	.67	44.5	13.0	4.41	.43	.55	.68	42.5	12.5	4.94	.43	.56	.69
	1400	660	49.1	14.4	3.56	.43	.56	.69	47.3	13.9	3.97	.43	.57	.71	45.4	13.3	4.43	.43	.58	.72	43.3	12.7	4.96	.44	.59	.74
10ACC-048 — C23-51 COOLING CAPACITY																										
63°F (17°C)	1300	615	44.0	12.9	3.44	.72	.85	.97	42.4	12.4	3.83	.73	.87	.98	40.8	12.0	4.29	.74	.88	.99	39.0	11.4	4.81	.76	.90	1.00
	1500	710	45.0	13.2	3.46	.75	.89	1.00	43.4	12.7	3.86	.76	.91	1.00	41.7	12.2	4.31	.78	.93	1.00	39.9	11.7	4.84	.79	.94	1.00
	1700	800	45.9	13.5	3.48	.78	.93	1.00	44.3	13.0	3.88	.79	.95	1.00	42.6	12.5	4.33	.81	.96	1.00	40.7	11.9	4.87	.83	.98	1.00
67°F (19°C)	1300	615	46.7	13.7	3.49	.56	.69	.82	45.1	13.2	3.90	.57	.70	.84	43.3	12.7	4.36	.58	.72	.85	41.3	12.1	4.89	.59	.73	.87
	1500	710	47.6	14.0	3.51	.58	.72	.86	45.9	13.5	3.92	.59	.74	.88	44.0	12.9	4.38	.60	.75	.90	42.0	12.3	4.91	.61	.77	.92
	1700	800	48.3	14.2	3.53	.60	.76	.90	46.6	13.7	3.94	.61	.77	.92	44.7	13.1	4.40	.62	.79	.94	42.7	12.5	4.93	.63	.81	.96
71°F (22°C)	1300	615	49.6	14.5	3.56	.43	.55	.67	47.9	14.0	3.97	.43	.55	.68	46.0	13.5	4.44	.43	.56	.69	43.9	12.9	4.98	.43	.57	.71
	1500	710	50.6	14.8	3.58	.43	.57	.70	48.8	14.3	3.99	.43	.57	.71	46.8	13.7	4.47	.44	.58	.73	44.7	13.1	5.00	.44	.59	.75
	1700	800	51.3	15.0	3.60	.44	.59	.73	49.4	14.5	4.02	.44	.60	.75	47.4	13.9	4.49	.45	.61	.77	45.2	13.2	5.02	.45	.62	.79
10ACC-048 — C33-48B/C - C23-51/65 COOLING CAPACITY																										
63°F (17°C)	1400	660	45.6	13.4	3.48	.73	.87	.98	44.1	12.9	3.88	.74	.88	.99	42.3	12.4	4.34	.76	.90	1.00	40.5	11.9	4.87	.77	.92	1.00
	1600	755	46.6	13.7	3.50	.76	.91	1.00	45.0	13.2	3.90	.77	.92	1.00	43.2	12.7	4.36	.79	.94	1.00	41.3	12.1	4.90	.80	.96	1.00
	1800	850	47.4	13.9	3.52	.79	.94	1.00	45.8	13.4	3.92	.80	.96	1.00	44.0	12.9	4.38	.82	.97	1.00	42.2	12.4	4.92	.84	.99	1.00
67°F (19°C)	1400	660	48.4	14.2	3.54	.57	.71	.84	46.7	13.7	3.94	.58	.72	.85	44.8	13.1	4.41	.58	.73	.87	42.8	12.5	4.95	.59	.75	.89
	1600	755	49.2	14.4	3.55	.59	.74	.88	47.5	13.9	3.96	.60	.75	.90	45.6	13.4	4.43	.60	.76	.91	43.5	12.7	4.96	.61	.78	.93
	1800	850	49.9	14.6	3.57	.61	.77	.91	48.1	14.1	3.98	.61	.78	.93	46.2	13.5	4.45	.62	.80	.95	44.1	12.9	4.99	.64	.82	.97
71°F (22°C)	1400	660	51.4	15.1	3.60	.43	.55	.68	49.6	14.5	4.02	.43	.56	.69	47.7	14.0	4.49	.43	.57	.71	45.5	13.3	5.04	.44	.58	.72
	1600	755	52.3	15.3	3.62	.43	.57	.71	50.4	14.8	4.04	.44	.58	.73	48.4	14.2	4.52	.44	.59	.74	46.2	13.5	5.06	.44	.60	.76
	1800	850	52.9	15.5	3.64	.44	.59	.75	51.0	14.9	4.05	.44	.60	.76	48.9	14.3	4.53	.45	.61	.78	46.7	13.7	5.08	.45	.63	.80
10ACC-048 — C33-50/60C - C33-60D - C26-51/65 COOLING CAPACITY																										
63°F (17°C)	1400	660	46.1	13.5	3.49	.73	.87	.98	44.5	13.0	3.89	.74	.88	.99	42.8	12.5	4.34	.75	.90	1.00	40.9	12.0	4.87	.77	.92	1.00
	1600	755	47.1	13.8	3.51	.76	.91	1.00	45.5	13.3	3.91	.77	.92	1.00	43.7	12.8	4.37	.79	.94	1.00	41.7	12.2	4.91	.80	.96	1.00
	1800	850	48.0	14.1	3.52	.79	.94	1.00	46.3	13.6	3.93	.80	.96	1.00	44.5	13.0	4.39	.82	.97	1.00	42.6	12.5	4.93	.84	.99	1.00
67°F (19°C)	1400	660	49.0	14.4	3.55	.57	.70	.84	47.2	13.8	3.96	.58	.72	.85	45.3	13.3	4.43	.58	.73	.87	43.2	12.7	4.96	.59	.75	.89
	1600	755	49.9	14.6	3.57	.59	.74	.88	48.0	14.1	3.98	.60	.75	.89	46.1	13.5	4.44	.60	.76	.91	43.9	12.9	4.99	.62	.78	.93
	1800	850	50.6	14.8	3.59	.61	.77	.92	48.7	14.3	3.99	.61	.78	.93	46.7	13.7	4.46	.62	.80	.95	44.5	13.0	5.01	.64	.82	.97
71°F (22°C)	1400	660	52.1	15.3	3.62	.43	.55	.68	50.2	14.7	4.03	.43	.56	.69	48.2	14.1	4.51	.43	.57	.71	46.0	13.5	5.05	.43	.58	.72
	1600	755	53.0	15.5	3.64	.43	.57	.71	51.0	14.9	4.06	.44	.58	.73	49.0	14.4	4.53	.44	.59	.74	46.7	13.7	5.07	.44	.60	.76
	1800	850	53.6	15.7	3.66	.44	.59	.74	51.7	15.2	4.07	.44	.60	.76	49.6	14.5	4.55	.45	.61	.78	47.2	13.8	5.10	.45	.63	.80
10ACC-048 — C26-65EAP COOLING CAPACITY																										
63°F (17°C)	1400	660	47.6	14.0	3.53	.74	.88	.99	45.9	13.5	3.93	.75	.89	1.00	44.0	12.9	4.40	.76	.91	1.00	41.9	12.3	4.93	.78	.94	1.00
	1600	755	48.7	14.3	3.56	.77	.92	1.00	46.9	13.7	3.96	.78	.94	1.00	45.0	13.2	4.43	.80	.96	1.00	42.9	12.6	4.96	.82	.98	1.00
	1800	850	49.7	14.6	3.58	.80	.96	1.00	47.8	14.0	3.99	.82	.98	1.00	45.9	13.5	4.45	.84	.99	1.00	44.0	12.9	4.99	.86	1.00	1.00
67°F (19°C)	1400	660	50.5	14.8	3.60	.57	.71	.85	48.6	14.2	4.01	.58	.72	.86	46.6	13.7	4.48	.59	.74	.88	44.4	13.0	5.01	.60	.75	.90
	1600	755	51.5	15.1	3.62	.59	.75	.89	49.5	14.5	4.03	.60	.76	.91	47.4	13.9	4.50	.61	.78	.93	45.2	13.2	5.04	.62	.80	.95
	1800	850	52.2	15.3	3.64	.61	.78	.93	50.2	14.7	4.05	.62	.80	.95	48.1	14.1	4.52	.64	.81	.97	45.7	13.4	5.06	.65	.84	.99
71°F (22°C)	1400	660	53.8	15.8	3.68	.43	.56	.69	51.8	15.2	4.10	.43	.57	.70	49.5	14.5	4.58	.43	.58	.72	47.2	13.8	5.12	.44	.58	.73
	1600	755	54.7	16.0	3.70	.44	.58	.72	52.6	15.4	4.12	.44	.59	.74	50.3	14.7	4.60	.44	.60	.76	47.9	14.0	5.14	.45	.61	.78
	1800	850	55.4	16.2	3.72	.44	.60	.76	53.2	15.6	4.14	.45	.61	.78	51.0	14.9	4.62	.45	.62	.79	48.5	14.2	5.16	.46	.64	.82
10ACC-048 — C33-48B/C WITH G60UHV-60C-090 COOLING CAPACITY																										
63°F (17°C)	1435	675	45.3	13.3	3.48	.73	.88	.98	43.7	12.8	3.88	.75	.89	1.00	42.0	12.3	4.35	.76	.91	1.00	40.2	11.8	4.87	.77	.93	1.00
	1600	755	46.1	13.5	3.50	.76	.91	1.00	44.5	13.0	3.90	.77	.92	1.00	42.8	12.5	4.36	.79	.94	1.00	40.9	12.0	4.90	.80	.96	1.00
	1755	830	46.7	13.7	3.52	.78	.94	1.00	45.1	13.2	3.92	.80	.95	1.00	43.4	12.7	4.38	.81	.97	1.00	41.5	12.2	4.92	.83	.98	1.00
67°F (19°C)	1435	675	48.1	14.1	3.54	.57	.71	.84	46.3	13.6	3.95	.58	.72	.86	44.5	13.0	4.41	.59	.74	.88	42.5	12.5	4.95	.60	.75	.90
	1600	755	48.7	14.3	3.55	.59	.74	.88	47.0	13.8	3.96	.60	.75	.89	45.1	13.2	4.43	.60	.76	.91	43.0	12.6	4.96	.61	.78	.93
	1755	830	49.2	14.4	3.57	.60	.76	.91	47.4	13.9	3.98	.61	.78	.92	45.5	13.3	4.45	.62	.79	.94	43.5	12.7	4.98	.63	.81	.96
71°F (22°C)	1435	675	51.0	14.9	3.61	.43	.56	.69	49.2	14.4	4.02	.43	.57	.70	47.3	13.9	4.49	.43	.57	.71	45.2	13.2	5.04	.44	.58	.73
	1600	755	51.7	15.2	3.62	.43	.57	.71	49.9	14.6	4.04	.43	.58	.73	47.8	14.0	4.52	.44	.59	.74	45.7	13.4	5.06	.44	.60	.76
	1755	830	52.3	15.3	3.63	.44	.59	.74	50.4	14.8	4.05	.44	.60	.75	48.3	14.2	4.53	.45	.61	.77	46.1	13.5	5.07	.45	.62	.79

RATINGS

NOTE - For Temperatures and Capacities not shown in tables, see bulletin - Cooling Unit Rating Table Correction Factor Data in Miscellaneous Engineering Data section.

Entering Wet Bulb Temperature	Total Air Volume		Outdoor Air Temperature Entering Outdoor Coil																							
			85°F (29°C)						95°F (35°C)						105°F (41°C)						115°F (46°C)					
			Total Cooling Capacity		Comp Motor kW Input	Sensible To Total Ratio (S/T) Dry Bulb			Total Cooling Capacity		Comp Motor kW Input	Sensible To Total Ratio (S/T) Dry Bulb			Total Cooling Capacity		Comp Motor kW Input	Sensible To Total Ratio (S/T) Dry Bulb			Total Cooling Capacity		Comp Motor kW Input	Sensible To Total Ratio (S/T) Dry Bulb		
	cfm	L/s	kBtuh	kW		75°F 24°C	80°F 27°C	85°F 29°C	kBtuh	kW		75°F 24°C	80°F 27°C	85°F 29°C	kBtuh	kW		75°F 24°C	80°F 27°C	85°F 29°C	kBtuh	kW		75°F 24°C	80°F 27°C	85°F 29°C
10ACC-048 — C33-50/60C WITH G60UHV-60C-090 COOLING CAPACITY																										
63°F (17°C)	1435	675	45.8	13.4	3.48	.74	.88	.99	44.2	13.0	3.88	.75	.89	1.00	42.5	12.5	4.34	.76	.91	1.00	40.6	11.9	4.87	.77	.93	1.00
	1600	755	46.6	13.7	3.50	.76	.91	1.00	45.0	13.2	3.90	.77	.92	1.00	43.2	12.7	4.36	.79	.94	1.00	41.3	12.1	4.89	.81	.96	1.00
	1755	830	47.3	13.9	3.51	.78	.93	1.00	45.6	13.4	3.91	.80	.95	1.00	43.8	12.8	4.38	.81	.97	1.00	41.9	12.3	4.91	.83	.99	1.00
67°F (19°C)	1435	675	48.6	14.2	3.54	.57	.71	.84	46.9	13.7	3.95	.58	.72	.86	45.0	13.2	4.42	.59	.74	.88	42.9	12.6	4.95	.60	.75	.90
	1600	755	49.3	14.4	3.56	.59	.74	.88	47.5	13.9	3.97	.60	.75	.89	45.6	13.4	4.43	.60	.76	.91	43.5	12.7	4.97	.61	.78	.93
	1755	830	49.9	14.6	3.57	.60	.76	.91	48.0	14.1	3.98	.61	.78	.92	46.1	13.5	4.44	.62	.79	.94	43.9	12.9	4.99	.63	.81	.96
71°F (22°C)	1435	675	51.7	15.2	3.61	.43	.56	.69	49.8	14.6	4.03	.43	.56	.70	47.8	14.0	4.50	.43	.57	.71	45.7	13.4	5.04	.44	.58	.73
	1600	755	52.4	15.4	3.63	.43	.57	.71	50.5	14.8	4.05	.44	.58	.72	48.4	14.2	4.52	.44	.59	.74	46.2	13.5	5.06	.44	.60	.76
	1755	830	52.9	15.5	3.64	.44	.59	.74	51.0	14.9	4.06	.44	.60	.75	48.9	14.3	4.53	.45	.61	.77	46.6	13.7	5.08	.45	.62	.79
10ACC-048 — C33-60D WITH G60UHV-60D-135 COOLING CAPACITY																										
63°F (17°C)	1435	675	46.1	13.5	3.49	.73	.88	.99	44.5	13.0	3.89	.74	.89	1.00	42.7	12.5	4.34	.76	.91	1.00	40.8	12.0	4.88	.78	.93	1.00
	1600	755	46.9	13.7	3.50	.76	.91	1.00	45.3	13.3	3.90	.77	.92	1.00	43.4	12.7	4.37	.79	.94	1.00	41.5	12.2	4.90	.80	.96	1.00
	1755	830	47.6	14.0	3.52	.78	.93	1.00	45.9	13.5	3.92	.80	.95	1.00	44.1	12.9	4.39	.81	.97	1.00	42.2	12.4	4.92	.83	.98	1.00
67°F (19°C)	1435	675	49.0	14.4	3.55	.57	.71	.84	47.2	13.8	3.96	.58	.72	.86	45.3	13.3	4.42	.59	.74	.88	43.2	12.7	4.96	.60	.75	.90
	1600	755	49.7	14.6	3.57	.59	.73	.88	47.9	14.0	3.98	.59	.75	.89	45.9	13.5	4.44	.60	.76	.91	43.7	12.8	4.98	.62	.78	.93
	1755	830	50.3	14.7	3.58	.60	.76	.91	48.4	14.2	3.99	.61	.77	.93	46.4	13.6	4.46	.62	.79	.94	44.1	12.9	5.00	.63	.81	.96
71°F (22°C)	1435	675	52.1	15.3	3.63	.43	.56	.69	50.2	14.7	4.04	.43	.56	.70	48.2	14.1	4.51	.43	.57	.71	45.9	13.5	5.05	.44	.58	.73
	1600	755	52.8	15.5	3.64	.43	.57	.71	50.8	14.9	4.06	.44	.58	.73	48.8	14.3	4.53	.44	.59	.74	46.4	13.6	5.08	.44	.60	.76
	1755	830	53.3	15.6	3.65	.44	.59	.74	51.4	15.1	4.07	.44	.60	.75	49.2	14.4	4.55	.45	.61	.77	46.9	13.7	5.09	.45	.62	.79
10ACC-048 — C26-41 WITH G32V5-100 COOLING CAPACITY																										
63°F (17°C)	1100	520	41.1	12.0	3.38	.70	.82	.93	39.7	11.6	3.77	.70	.83	.95	38.2	11.2	4.21	.72	.85	.96	36.5	10.7	4.74	.73	.86	.98
	1200	565	41.7	12.2	3.39	.71	.84	.96	40.3	11.8	3.78	.72	.86	.97	38.7	11.3	4.24	.73	.87	.98	37.0	10.8	4.75	.75	.89	.99
	1300	615	42.3	12.4	3.40	.73	.86	.97	40.8	12.0	3.80	.74	.88	.99	39.3	11.5	4.25	.75	.89	1.00	37.5	11.0	4.76	.77	.91	1.00
67°F (19°C)	1100	520	43.7	12.8	3.43	.55	.67	.79	42.2	12.4	3.83	.56	.68	.80	40.5	11.9	4.28	.56	.69	.81	38.7	11.3	4.81	.57	.70	.83
	1200	565	44.3	13.0	3.45	.56	.69	.81	42.7	12.5	3.84	.57	.70	.82	41.1	12.0	4.30	.57	.71	.84	39.2	11.5	4.83	.58	.72	.86
	1300	615	44.8	13.1	3.46	.57	.70	.83	43.2	12.7	3.86	.58	.71	.85	41.5	12.2	4.31	.58	.73	.86	39.6	11.6	4.84	.59	.74	.88
71°F (22°C)	1100	520	46.5	13.6	3.50	.42	.53	.64	44.9	13.2	3.90	.42	.54	.65	43.1	12.6	4.36	.42	.55	.66	41.2	12.1	4.89	.43	.55	.68
	1200	565	47.1	13.8	3.51	.42	.54	.66	45.4	13.3	3.92	.43	.55	.67	43.7	12.8	4.38	.43	.55	.68	41.7	12.2	4.92	.43	.56	.70
	1300	615	47.6	14.0	3.52	.43	.55	.68	45.9	13.5	3.93	.43	.56	.69	44.1	12.9	4.39	.43	.57	.70	42.1	12.3	4.93	.43	.58	.72
10ACC-048 — C26-46 WITH G32V5-100 COOLING CAPACITY																										
63°F (17°C)	1100	520	41.5	12.2	3.38	.69	.82	.93	40.1	11.8	3.77	.70	.83	.94	38.5	11.3	4.22	.71	.84	.96	36.8	10.8	4.74	.72	.86	.98
	1200	565	42.2	12.4	3.40	.71	.84	.95	40.7	11.9	3.79	.72	.85	.97	39.1	11.5	4.24	.73	.87	.98	37.4	11.0	4.75	.74	.89	.99
	1300	615	42.8	12.5	3.41	.73	.86	.97	41.3	12.1	3.80	.74	.87	.99	39.6	11.6	4.25	.75	.89	1.00	37.9	11.1	4.77	.76	.91	1.00
67°F (19°C)	1100	520	44.2	13.0	3.44	.55	.67	.78	42.6	12.5	3.84	.56	.68	.79	40.9	12.0	4.29	.56	.69	.81	39.1	11.5	4.82	.57	.70	.83
	1200	565	44.8	13.1	3.46	.56	.68	.81	43.2	12.7	3.85	.56	.69	.82	41.5	12.2	4.31	.57	.70	.84	39.6	11.6	4.83	.58	.72	.85
	1300	615	45.3	13.3	3.47	.57	.70	.83	43.7	12.8	3.87	.57	.71	.84	41.9	12.3	4.33	.58	.73	.86	40.0	11.7	4.85	.59	.74	.88
71°F (22°C)	1100	520	47.0	13.8	3.51	.42	.53	.64	45.4	13.3	3.91	.42	.54	.65	43.6	12.8	4.37	.42	.54	.66	41.6	12.2	4.91	.43	.55	.67
	1200	565	47.7	14.0	3.52	.42	.54	.66	46.0	13.5	3.93	.42	.55	.67	44.1	12.9	4.40	.43	.55	.68	42.1	12.3	4.92	.43	.56	.70
	1300	615	48.2	14.1	3.54	.43	.55	.68	46.5	13.6	3.95	.43	.56	.69	44.6	13.1	4.41	.43	.57	.70	42.6	12.5	4.94	.43	.58	.72
10ACC-048 — C23-51 WITH G32V5-100 COOLING CAPACITY																										
63°F (17°C)	1300	615	43.7	12.8	3.43	.72	.85	.97	42.2	12.4	3.82	.73	.86	.98	40.5	11.9	4.28	.74	.88	.99	38.7	11.3	4.80	.76	.90	1.00
	1500	710	44.7	13.1	3.45	.75	.89	1.00	43.1	12.6	3.85	.76	.91	1.00	41.5	12.2	4.30	.78	.93	1.00	39.6	11.6	4.82	.79	.95	1.00
	1700	800	45.6	13.4	3.47	.78	.93	1.00	44.0	12.9	3.87	.79	.95	1.00	42.3	12.4	4.32	.81	.96	1.00	40.5	11.9	4.85	.83	.98	1.00
67°F (19°C)	1300	615	46.4	13.6	3.48	.56	.69	.82	44.8	13.1	3.89	.57	.70	.83	43.0	12.6	4.34	.58	.72	.85	41.0	12.0	4.88	.59	.73	.87
	1500	710	47.3	13.9	3.51	.58	.73	.86	45.6	13.4	3.91	.59	.74	.88	43.8	12.8	4.37	.60	.75	.90	41.8	12.3	4.90	.61	.77	.92
	1700	800	48.0	14.1	3.52	.60	.76	.90	46.3	13.6	3.93	.61	.77	.92	44.4	13.0	4.39	.62	.79	.94	42.4	12.4	4.92	.63	.81	.96
71°F (22°C)	1300	615	49.3	14.4	3.55	.43	.55	.67	47.6	14.0	3.96	.43	.55	.68	45.7	13.4	4.43	.43	.56	.69	43.6	12.8	4.97	.43	.57	.71
	1500	710	50.2	14.7	3.57	.43	.57	.70	48.4	14.2	3.98	.43	.57	.71	46.5	13.6	4.46	.44	.58	.73	44.4	13.0	4.99	.44	.59	.75
	1700	800	51.0	14.9	3.59	.44	.59	.73	49.1	14.4	4.01	.44	.59	.75	47.1	13.8	4.47	.44	.61	.77	45.0	13.2	5.01	.45	.62	.78
10ACC-048 — C23-51/65 WITH G32V5-125 COOLING CAPACITY																										
63°F (17°C)	1400	660	45.4	13.3	3.47	.73	.87	.99	43.7	12.8	3.86	.74	.89	1.00	42.0	12.3	4.32	.76	.90	1.00	40.1	11.8	4.85	.77	.93	1.00
	1600	755	46.4	13.6	3.49	.76	.91	1.00	44.7	13.1	3.89	.77	.93	1.00	42.9	12.6	4.35	.79	.95	1.00	41.0	12.0	4.88	.81	.97	1.00
	1800	850	47.2	13.8	3.51	.79	.95	1.00	45.5	13.3	3.91	.81	.96	1.00	43.7	12.8	4.37	.83	.98	1.00	41.8	12.3	4.90	.84	1.00	1.00
67°F (19°C)	1400	660	48.2	14.1	3.53	.57	.71	.84	46.4	13.6	3.94	.58	.72	.85	44.5	13.0	4.40	.59	.73	.87	42.4	12.4	4.93	.60	.75	.89
	1600	755	49.0	14.4	3.55	.59	.74	.88	47.2	13.8	3.96	.60	.75	.90	45.3	13.3	4.43	.61	.77	.92	43.1	12.6	4.96	.62	.79	.94
	1800	850	49.7	14.6	3.57	.61	.77	.92	47.9	14.0	3.98	.62	.79	.94	45.9	13.5	4.45	.63	.80	.96	43.7	12.8	4.98	.64	.82	.98
71°F (22°C)	1400	660	51.2	15.0	3.61	.43	.55	.68	49.4	14.5	4.02	.43	.56	.69	47.4	13.9	4.49	.43	.57	.71	45.2	13.2	5.03	.44	.58	.73
	1600	755	52.1	15.3	3.63	.43	.58	.72	50.2	14.7	4.04	.44	.58	.73	48.1	14.1	4.52	.44	.59	.75	45.8	13.4	5.06	.45	.60	.77
	1800	850	52.8	15.5	3.64	.44	.60	.75	50.8	14.9	4.06	.44	.61	.77	48.7	14.3	4.53	.45	.62	.78	46.3	13.6	5.07	.45	.63	.80
10ACC-048 — C26-51/65 WITH G32V5-125 COOLING CAPACITY																										
63°F (17°C)	1400	660	45.5	13.3	3.47	.74	.88	.99	43.8	12.8	3.87	.75	.89	1.00	42.1	12.3	4.33	.76	.91	1.00	40.1	11.8	4.86	.78	.94	1.00
	1600	755	46.5	13.6	3.50	.77	.92	1.00	44.8	13.1	3.90	.79	.94	1.00	43.0	12.6	4.36	.80	.96	1.00	41.1	12.0	4.89	.82	.98	1.00
	1800	850	47.4	13.9	3.52	.81	.96	1.00	45.7	13.4	3.92	.82	.98	1.00	43.9	12.9	4.38	.84	.99	1.00	42.1	12.3	4.92	.86	1.00	1.00
67°F (19°C)	1400	660	48.2	14.1	3.54	.58	.71	.85	46.4	13.6	3.94	.58	.73	.86	44.5	13.0	4.41	.59	.74	.88	42.4	12.4	4.94	.60	.76	.90
	1600	755	49.1	14.4	3.56	.59	.75	.89	47.2	13.8	3.97	.60	.76	.91	45.2	13.2	4.43	.61	.78	.93	43.1	12.6	4.96	.63	.80	.95
	1800	850	49.8	14.6	3.58	.62	.78	.93	47.9	14.0	3.99	.63	.80	.95	45.9	13.5	4.45	.64	.82	.97	43.7	12.8	4.98	.65	.84	.99
71°F (22°C)	1400	660	51.3	15.0	3.61	.43	.56	.69	49.4	14.5	4.02	.43	.57	.70	47.3	13.9	4.50	.44	.58	.72	45.1	13.2	5.04	.44	.59	.73
	1600	755	52.1	15.3	3.64	.44	.58	.73	50.2	14.7	4.05	.44	.59	.74	48.1	14.1	4.52	.44	.60	.76	45.7	13.4	5.06	.45	.61	.78
	1800	850	52.8	15.5	3.65	.44	.60	.76	50.8	14.9	4.07	.45	.61	.78	48.6	14.2	4.54	.45	.63	.80	46.3	13.6	5.08	.46	.64	.82

RATINGS

NOTE - For Temperatures and Capacities not shown in tables, see bulletin - Cooling Unit Rating Table Correction Factor Data in Miscellaneous Engineering Data section.

Entering Wet Bulb Temperature	Total Air Volume		Outdoor Air Temperature Entering Outdoor Coil																							
			85°F (29°C)						95°F (35°C)						105°F (41°C)						115°F (46°C)					
			Total Cooling Capacity		Comp Motor kW Input	Sensible To Total Ratio (S/T) Dry Bulb			Total Cooling Capacity		Comp Motor kW Input	Sensible To Total Ratio (S/T) Dry Bulb			Total Cooling Capacity		Comp Motor kW Input	Sensible To Total Ratio (S/T) Dry Bulb			Total Cooling Capacity		Comp Motor kW Input	Sensible To Total Ratio (S/T) Dry Bulb		
	cfm	L/s	kBtuh	kW		75°F 24°C	80°F 27°C	85°F 29°C	kBtuh	kW		75°F 24°C	80°F 27°C	85°F 29°C	kBtuh	kW		75°F 24°C	80°F 27°C	85°F 29°C	kBtuh	kW		75°F 24°C	80°F 27°C	85°F 29°C
10ACC-048 — C26-65EAP WITH G32V5-125 COOLING CAPACITY																										
63°F (17°C)	1400	660	47.3	13.9	3.51	.74	.88	.99	45.5	13.3	3.92	.75	.89	1.00	43.7	12.8	4.38	.76	.91	1.00	41.6	12.2	4.91	.78	.94	1.00
	1600	755	48.4	14.2	3.54	.77	.92	1.00	46.6	13.7	3.94	.78	.94	1.00	44.6	13.1	4.41	.80	.96	1.00	42.6	12.5	4.94	.82	.98	1.00
	1800	850	49.3	14.4	3.56	.80	.96	1.00	47.5	13.9	3.97	.82	.98	1.00	45.6	13.4	4.43	.84	.99	1.00	43.7	12.8	4.97	.86	1.00	1.00
67°F (19°C)	1400	660	50.2	14.7	3.58	.57	.71	.85	48.3	14.2	3.99	.58	.72	.86	46.2	13.5	4.46	.59	.74	.88	44.1	12.9	4.99	.60	.76	.91
	1600	755	51.1	15.0	3.61	.59	.75	.89	49.2	14.4	4.01	.60	.76	.91	47.1	13.8	4.48	.61	.78	.93	44.8	13.1	5.02	.62	.80	.95
	1800	850	51.9	15.2	3.62	.61	.78	.93	49.9	14.6	4.03	.62	.80	.95	47.7	14.0	4.50	.64	.82	.97	45.4	13.3	5.04	.65	.84	.99
71°F (22°C)	1400	660	53.4	15.6	3.66	.43	.56	.69	51.4	15.1	4.08	.43	.57	.70	49.2	14.4	4.55	.43	.58	.72	46.9	13.7	5.09	.44	.58	.73
	1600	755	54.3	15.9	3.68	.43	.58	.72	52.2	15.3	4.10	.44	.59	.74	50.0	14.7	4.57	.44	.60	.75	47.6	14.0	5.12	.45	.61	.78
	1800	850	55.0	16.1	3.70	.44	.60	.76	52.9	15.5	4.12	.45	.61	.78	50.6	14.8	4.59	.45	.62	.79	48.1	14.1	5.14	.46	.64	.82
10ACC-048 — CR26-48N-F COOLING CAPACITY																										
63°F (17°C)	1200	565	41.1	12.0	3.37	.70	.83	.94	39.7	11.6	3.76	.71	.84	.96	38.2	11.2	4.21	.72	.85	.97	36.5	10.7	4.73	.73	.87	.99
	1400	660	42.2	12.4	3.40	.73	.86	.98	40.7	11.9	3.79	.74	.88	.99	39.1	11.5	4.24	.75	.90	1.00	37.4	11.0	4.75	.77	.92	1.00
	1600	755	43.1	12.6	3.42	.76	.90	1.00	41.6	12.2	3.81	.77	.92	1.00	39.9	11.7	4.26	.78	.94	1.00	38.2	11.2	4.78	.80	.96	1.00
67°F (19°C)	1200	565	43.8	12.8	3.43	.55	.67	.79	42.3	12.4	3.83	.56	.68	.81	40.6	11.9	4.28	.56	.69	.82	38.8	11.4	4.81	.57	.71	.84
	1400	660	44.8	13.1	3.46	.57	.70	.83	43.2	12.7	3.85	.58	.71	.85	41.5	12.2	4.31	.58	.73	.87	39.6	11.6	4.83	.59	.74	.89
	1600	755	45.6	13.4	3.47	.59	.73	.87	44.0	12.9	3.88	.59	.74	.89	42.2	12.4	4.33	.60	.76	.91	40.3	11.8	4.85	.61	.78	.93
71°F (22°C)	1200	565	46.6	13.7	3.50	.42	.54	.65	45.0	13.2	3.90	.42	.54	.66	43.3	12.7	4.36	.42	.55	.67	41.3	12.1	4.90	.43	.55	.68
	1400	660	47.7	14.0	3.52	.43	.55	.68	46.0	13.5	3.93	.43	.56	.69	44.1	12.9	4.39	.43	.57	.70	42.1	12.3	4.92	.43	.58	.72
	1600	755	48.4	14.2	3.54	.43	.57	.71	46.7	13.7	3.95	.43	.58	.72	44.8	13.1	4.42	.44	.59	.74	42.7	12.5	4.94	.44	.60	.75
10ACC-048 — CR26-48W-F COOLING CAPACITY																										
63°F (17°C)	1400	660	42.7	12.5	3.40	.73	.87	.98	41.2	12.1	3.79	.74	.88	.99	39.6	11.6	4.24	.75	.90	1.00	37.8	11.1	4.75	.77	.92	1.00
	1600	755	43.6	12.8	3.42	.76	.90	1.00	42.1	12.3	3.81	.77	.92	1.00	40.4	11.8	4.26	.78	.94	1.00	38.6	11.3	4.78	.80	.96	1.00
	1800	850	44.4	13.0	3.43	.78	.94	1.00	42.8	12.5	3.83	.80	.95	1.00	41.2	12.1	4.28	.81	.97	1.00	39.3	11.5	4.80	.83	.99	1.00
67°F (19°C)	1400	660	45.4	13.3	3.46	.57	.70	.83	43.7	12.8	3.85	.58	.71	.85	42.0	12.3	4.31	.58	.73	.87	40.1	11.8	4.83	.59	.74	.89
	1600	755	46.1	13.5	3.47	.59	.73	.87	44.5	13.0	3.88	.59	.74	.89	42.7	12.5	4.33	.60	.76	.91	40.7	11.9	4.85	.61	.78	.93
	1800	850	46.8	13.7	3.49	.60	.76	.91	45.1	13.2	3.89	.61	.78	.93	43.2	12.7	4.35	.62	.79	.94	41.2	12.1	4.88	.63	.81	.96
71°F (22°C)	1400	660	48.2	14.1	3.52	.43	.55	.68	46.5	13.6	3.93	.43	.56	.69	44.6	13.1	4.39	.43	.57	.70	42.6	12.5	4.92	.43	.58	.72
	1600	755	49.0	14.4	3.54	.43	.57	.71	47.2	13.8	3.95	.43	.58	.72	45.3	13.3	4.42	.44	.59	.74	43.2	12.7	4.94	.44	.60	.76
	1800	850	49.6	14.5	3.56	.44	.59	.74	47.8	14.0	3.97	.44	.60	.76	45.9	13.5	4.43	.44	.61	.77	43.7	12.8	4.96	.45	.62	.79
10ACC-048 — CR26-60N-F COOLING CAPACITY																										
63°F (17°C)	1200	565	43.0	12.6	3.41	.70	.83	.95	41.4	12.1	3.80	.71	.85	.96	39.8	11.7	4.24	.72	.86	.98	38.0	11.1	4.77	.74	.88	.99
	1400	660	44.1	12.9	3.43	.74	.88	.99	42.5	12.5	3.82	.75	.89	1.00	40.8	12.0	4.28	.76	.91	1.00	38.9	11.4	4.80	.78	.93	1.00
	1600	755	45.1	13.2	3.46	.77	.92	1.00	43.5	12.7	3.85	.78	.93	1.00	41.7	12.2	4.31	.79	.95	1.00	39.8	11.7	4.83	.81	.97	1.00
67°F (19°C)	1200	565	45.7	13.4	3.47	.56	.68	.80	44.1	12.9	3.87	.56	.69	.81	42.3	12.4	4.32	.57	.70	.83	40.4	11.8	4.85	.57	.71	.85
	1400	660	46.8	13.7	3.50	.57	.71	.84	45.1	13.2	3.90	.58	.72	.86	43.2	12.7	4.36	.59	.74	.88	41.2	12.1	4.89	.60	.75	.90
	1600	755	47.7	14.0	3.52	.59	.74	.89	45.9	13.5	3.92	.60	.76	.90	44.0	12.9	4.38	.61	.77	.92	41.9	12.3	4.91	.62	.79	.95
71°F (22°C)	1200	565	48.7	14.3	3.54	.42	.54	.65	46.9	13.7	3.95	.42	.54	.66	45.0	13.2	4.41	.43	.55	.68	43.0	12.6	4.94	.43	.56	.69
	1400	660	49.8	14.6	3.57	.43	.56	.69	48.0	14.1	3.98	.43	.56	.70	46.0	13.5	4.45	.43	.57	.71	43.8	12.8	4.98	.44	.58	.73
	1600	755	50.6	14.8	3.59	.43	.58	.72	48.7	14.3	4.00	.44	.59	.74	46.6	13.7	4.47	.44	.60	.75	44.5	13.0	5.00	.44	.61	.77
10ACC-048 — CR26-60W-F COOLING CAPACITY																										
63°F (17°C)	1400	660	44.3	13.0	3.44	.73	.88	.99	42.7	12.5	3.83	.75	.89	1.00	41.0	12.0	4.29	.76	.91	1.00	39.1	11.5	4.81	.78	.93	1.00
	1600	755	45.3	13.3	3.47	.77	.92	1.00	43.6	12.8	3.86	.78	.93	1.00	41.9	12.3	4.32	.80	.95	1.00	40.0	11.7	4.84	.82	.97	1.00
	1800	850	46.1	13.5	3.48	.80	.95	1.00	44.5	13.0	3.88	.81	.97	1.00	42.7	12.5	4.34	.83	.99	1.00	40.9	12.0	4.87	.85	1.00	1.00
67°F (19°C)	1400	660	47.0	13.8	3.51	.57	.71	.85	45.3	13.3	3.91	.58	.72	.86	43.4	12.7	4.37	.59	.74	.88	41.3	12.1	4.90	.60	.76	.90
	1600	755	47.9	14.0	3.52	.59	.74	.89	46.0	13.5	3.93	.60	.76	.90	44.1	12.9	4.39	.61	.77	.92	42.0	12.3	4.92	.62	.79	.95
	1800	850	48.5	14.2	3.55	.61	.78	.93	46.7	13.7	3.95	.62	.79	.94	44.7	13.1	4.41	.63	.81	.96	42.6	12.5	4.94	.64	.83	.98
71°F (22°C)	1400	660	50.0	14.7	3.58	.43	.56	.69	48.2	14.1	3.99	.43	.56	.70	46.2	13.5	4.46	.43	.57	.71	44.0	12.9	4.99	.44	.58	.73
	1600	755	50.8	14.9	3.60	.44	.58	.72	48.9	14.3	4.01	.44	.59	.74	46.8	13.7	4.48	.44	.60	.75	44.6	13.1	5.01	.45	.61	.77
	1800	850	51.5	15.1	3.62	.44	.60	.76	49.5	14.5	4.03	.45	.61	.77	47.4	13.9	4.50	.45	.62	.79	45.1	13.2	5.03	.46	.63	.81
10ACC-048 — CR26-48N/W-F WITH GHR32V5-100 COOLING CAPACITY																										
63°F (17°C)	1260	595	41.2	12.1	3.40	.71	.84	.95	39.7	11.6	3.79	.72	.85	.97	38.2	11.2	4.24	.73	.87	.98	36.5	10.7	4.76	.74	.88	1.00
	1460	690	42.2	12.4	3.42	.74	.88	.99	40.7	11.9	3.82	.75	.89	1.00	39.1	11.5	4.26	.76	.91	1.00	37.3	10.9	4.78	.78	.93	1.00
	1660	785	43.0	12.6	3.44	.76	.91	1.00	41.5	12.2	3.83	.78	.93	1.00	39.9	11.7	4.28	.79	.94	1.00	38.1	11.2	4.81	.81	.97	1.00
67°F (19°C)	1260	595	43.8	12.8	3.46	.56	.68	.81	42.3	12.4	3.86	.56	.69	.82	40.6	11.9	4.31	.57	.70	.83	38.8	11.4	4.84	.58	.72	.85
	1460	690	44.7	13.1	3.48	.57	.71	.85	43.1	12.6	3.88	.58	.72	.86	41.4	12.1	4.34	.59	.74	.88	39.5	11.6	4.86	.60	.75	.90
	1660	785	45.5	13.3	3.50	.59	.74	.89	43.8	12.8	3.90	.60	.75	.90	42.0	12.3	4.36	.61	.77	.92	40.1	11.8	4.88	.62	.79	.94
71°F (22°C)	1260	595	46.6	13.7	3.53	.42	.54	.66	45.0	13.2	3.93	.42	.54	.67	43.2	12.7	4.39	.43	.55	.68	41.2	12.1	4.93	.43	.56	.69
	1460	690	47.5	13.9	3.55	.43	.56	.69	45.8	13.4	3.96	.43	.57	.70	44.0	12.9	4.42	.43	.57	.71	42.0	12.3	4.95	.44	.58	.73
	1660	785	48.3	14.2	3.57	.43	.58	.72	46.5	13.6	3.98	.44	.58	.73	44.6	13.1	4.44	.44	.59	.75	42.6	12.5	4.97	.44	.61	.77
10ACC-048 — CR26-60N-F WITH GHR32V-125 COOLING CAPACITY																										
63°F (17°C)	1260	595	43.1	12.6	3.43	.71	.85	.96	41.6	12.2	3.82	.72	.86	.98	39.9	11.7	4.26	.74	.88	.99	38.1	11.2	4.79	.75	.90	1.00
	1460	690	44.2	13.0	3.45	.75	.89	1.00	42.6	12.5	3.85	.76	.90	1.00	40.9	12.0	4.30	.77	.92	1.00	39.0	11.4	4.82	.79	.94	1.00
	1660	785	45.1	13.2	3.47	.78	.93	1.00	43.5	12.7	3.87	.79	.94	1.00	41.8	12.3	4.33	.81	.96	1.00	39.9	11.7	4.85	.83	.98	1.00
67°F (19°C)	1260	595	45.9	13.5	3.49	.56	.69	.81	44.2	13.0	3.89	.57	.70	.83	42.4	12.4	4.34	.57	.71	.84	40.5	11.9	4.88	.58	.72	.86
	1460	690	46.9	13.7	3.51	.58	.72	.86	45.1	13.2	3.91	.59	.73	.87	43.3	12.7	4.38	.59	.75	.89	41.2	12.1	4.91	.60	.76	.92
	1660	785	47.6	14.0	3.53	.60	.75	.90	45.9	13.5	3.94	.61	.77	.92	43.9	12.9	4.40	.62	.79	.93	41.9	12.3	4.92	.63	.80	.96
71°F (22°C)	1260	595	48.8	14.3	3.56	.42	.54	.66	47.1	13.8	3.97	.42	.55	.67	45.2	13.2	4.43	.43	.56	.69	43.1	12.6	4.97	.43	.57	.70
	1460	690	49.8	14.6	3.58	.43	.56	.70	48.0	14.1	3.99	.43	.57	.71	46.0	13.5	4.47	.43	.58	.72	43.8	12.8	5.00	.44	.59	.74
	1660	785	50.6	14.8	3.60	.44	.58	.73	48.7	14.3	4.02	.44	.59	.75	46.7	13.7	4.49	.44	.60	.76	44.4	13.0	5.02	.45	.62	.78

RATINGS

NOTE - For Temperatures and Capacities not shown in tables, see bulletin - Cooling Unit Rating Table Correction Factor Data in Miscellaneous Engineering Data section.

Entering Wet Bulb Temperature	Total Air Volume		Outdoor Air Temperature Entering Outdoor Coil																							
			85°F (29°C)						95°F (35°C)						105°F (41°C)						115°F (46°C)					
			Total Cooling Capacity		Comp Motor kW Input	Sensible To Total Ratio (S/T) Dry Bulb			Total Cooling Capacity		Comp Motor kW Input	Sensible To Total Ratio (S/T) Dry Bulb			Total Cooling Capacity		Comp Motor kW Input	Sensible To Total Ratio (S/T) Dry Bulb			Total Cooling Capacity		Comp Motor kW Input	Sensible To Total Ratio (S/T) Dry Bulb		
	cfm	L/s	kBtuh	kW		75°F 24°C	80°F 27°C	85°F 29°C	kBtuh	kW		75°F 24°C	80°F 27°C	85°F 29°C	kBtuh	kW		75°F 24°C	80°F 27°C	85°F 29°C	kBtuh	kW		75°F 24°C	80°F 27°C	85°F 29°C
10ACC-048 — CR26-60W-F WITH GHR32V5-125 COOLING CAPACITY																										
63°F (17°C)	1460	690	44.2	13.0	3.36	.75	.89	1.00	42.6	12.5	3.75	.76	.90	1.00	40.9	12.0	4.19	.77	.92	1.00	39.0	11.4	4.70	.79	.94	1.00
	1660	785	45.1	13.2	3.38	.78	.93	1.00	43.5	12.7	3.77	.79	.94	1.00	41.8	12.3	4.21	.81	.96	1.00	39.9	11.7	4.73	.83	.98	1.00
	1920	905	46.2	13.5	3.41	.82	.97	1.00	44.6	13.1	3.80	.83	.98	1.00	42.9	12.6	4.24	.85	1.00	1.00	41.1	12.0	4.77	.87	1.00	1.00
67°F (19°C)	1460	690	46.9	13.7	3.42	.58	.72	.86	45.1	13.2	3.81	.59	.73	.87	43.3	12.7	4.27	.59	.75	.89	41.2	12.1	4.78	.60	.76	.92
	1660	785	47.6	14.0	3.44	.60	.75	.90	45.9	13.5	3.84	.61	.77	.92	43.9	12.9	4.29	.62	.79	.93	41.9	12.3	4.80	.63	.80	.96
	1920	905	48.5	14.2	3.47	.62	.80	.95	46.6	13.7	3.86	.63	.81	.96	44.6	13.1	4.31	.64	.83	.98	42.5	12.5	4.82	.66	.85	1.00
71°F (22°C)	1460	690	49.8	14.6	3.49	.43	.56	.70	48.0	14.1	3.89	.43	.57	.71	46.0	13.5	4.35	.43	.58	.72	43.8	12.8	4.88	.44	.59	.74
	1660	785	50.6	14.8	3.51	.44	.58	.73	48.7	14.3	3.92	.44	.59	.75	46.7	13.7	4.37	.44	.60	.76	44.4	13.0	4.89	.45	.62	.78
	1920	905	51.4	15.1	3.54	.45	.61	.78	49.4	14.5	3.94	.45	.62	.79	47.3	13.9	4.39	.45	.63	.81	45.0	13.2	4.91	.46	.65	.83
10ACC-048 — CH23-51 COOLING CAPACITY																										
63°F (17°C)	1400	660	43.8	12.8	3.43	.73	.87	.98	42.3	12.4	3.83	.75	.89	1.00	40.7	11.9	4.28	.76	.90	1.00	38.9	11.4	4.81	.77	.93	1.00
	1600	755	44.7	13.1	3.45	.77	.91	1.00	43.2	12.7	3.85	.78	.93	1.00	41.5	12.2	4.30	.79	.95	1.00	39.8	11.7	4.83	.81	.96	1.00
	1800	850	45.5	13.3	3.47	.80	.95	1.00	44.0	12.9	3.87	.81	.96	1.00	42.3	12.4	4.32	.82	.98	1.00	40.5	11.9	4.86	.84	.99	1.00
67°F (19°C)	1400	660	46.4	13.6	3.49	.57	.71	.85	44.8	13.1	3.89	.58	.72	.86	43.0	12.6	4.35	.59	.73	.88	41.1	12.0	4.88	.60	.75	.90
	1600	755	47.2	13.8	3.50	.59	.74	.89	45.5	13.3	3.91	.60	.76	.90	43.7	12.8	4.37	.61	.77	.92	41.7	12.2	4.90	.62	.79	.94
	1800	850	47.8	14.0	3.52	.61	.78	.92	46.1	13.5	3.93	.62	.79	.94	44.2	13.0	4.39	.63	.81	.96	42.2	12.4	4.92	.64	.83	.97
71°F (22°C)	1400	660	49.3	14.4	3.55	.43	.56	.69	47.6	14.0	3.96	.43	.57	.70	45.7	13.4	4.43	.43	.57	.71	43.6	12.8	4.97	.44	.58	.73
	1600	755	50.1	14.7	3.57	.44	.58	.72	48.3	14.2	3.98	.44	.59	.73	46.3	13.6	4.45	.44	.60	.75	44.2	13.0	4.99	.45	.61	.77
	1800	850	50.7	14.9	3.58	.44	.60	.75	48.9	14.3	4.00	.44	.61	.77	46.9	13.7	4.47	.45	.62	.79	44.8	13.1	5.00	.45	.63	.81
10ACC-048 — CH33-44/48B-2F COOLING CAPACITY																										
63°F (17°C)	1100	520	43.2	12.7	3.43	.69	.81	.92	41.7	12.2	3.82	.70	.82	.93	40.1	11.8	4.27	.70	.83	.95	38.3	11.2	4.80	.72	.85	.97
	1300	615	44.5	13.0	3.45	.72	.85	.96	42.9	12.6	3.86	.72	.86	.98	41.2	12.1	4.31	.74	.88	.99	39.4	11.5	4.83	.75	.90	1.00
	1500	710	45.5	13.3	3.48	.74	.89	1.00	44.0	12.9	3.88	.76	.90	1.00	42.2	12.4	4.33	.77	.92	1.00	40.3	11.8	4.87	.79	.94	1.00
67°F (19°C)	1100	520	46.1	13.5	3.49	.55	.66	.77	44.4	13.0	3.89	.55	.67	.78	42.7	12.5	4.35	.56	.68	.80	40.8	12.0	4.89	.56	.69	.82
	1300	615	47.3	13.9	3.52	.56	.69	.82	45.6	13.4	3.92	.57	.70	.83	43.8	12.8	4.39	.58	.71	.85	41.8	12.3	4.91	.58	.73	.87
	1500	710	48.3	14.2	3.54	.58	.72	.86	46.5	13.6	3.95	.59	.73	.87	44.7	13.1	4.40	.59	.74	.89	42.6	12.5	4.94	.60	.76	.91
71°F (22°C)	1100	520	49.1	14.4	3.56	.42	.53	.63	47.4	13.9	3.97	.42	.53	.64	45.5	13.3	4.43	.42	.54	.65	43.5	12.7	4.98	.43	.54	.66
	1300	615	50.3	14.7	3.59	.43	.54	.66	48.6	14.2	4.00	.43	.55	.67	46.6	13.7	4.47	.43	.56	.69	44.5	13.0	5.01	.43	.57	.70
	1500	710	51.3	15.0	3.61	.43	.56	.70	49.4	14.5	4.03	.43	.57	.71	47.4	13.9	4.50	.44	.58	.72	45.3	13.3	5.03	.44	.59	.74
10ACC-048 — CH23-65 COOLING CAPACITY																										
63°F (17°C)	1400	660	44.2	13.0	3.44	.73	.87	.99	42.7	12.5	3.84	.74	.89	1.00	41.0	12.0	4.29	.76	.90	1.00	39.2	11.5	4.81	.77	.92	1.00
	1600	755	45.2	13.2	3.46	.76	.91	1.00	43.6	12.8	3.86	.78	.93	1.00	41.9	12.3	4.31	.79	.95	1.00	40.0	11.7	4.84	.81	.97	1.00
	1800	850	46.0	13.5	3.48	.80	.95	1.00	44.4	13.0	3.88	.81	.96	1.00	42.7	12.5	4.34	.83	.98	1.00	40.9	12.0	4.87	.85	.99	1.00
67°F (19°C)	1400	660	46.9	13.7	3.50	.57	.71	.84	45.2	13.2	3.91	.58	.72	.86	43.4	12.7	4.37	.59	.73	.87	41.4	12.1	4.89	.60	.75	.89
	1600	755	47.7	14.0	3.52	.59	.74	.88	46.0	13.5	3.93	.60	.75	.90	44.1	12.9	4.38	.61	.77	.92	42.1	12.3	4.92	.62	.79	.94
	1800	850	48.4	14.2	3.54	.61	.77	.92	46.6	13.7	3.94	.62	.79	.94	44.7	13.1	4.41	.63	.81	.96	42.6	12.5	4.94	.64	.83	.97
71°F (22°C)	1400	660	49.8	14.6	3.57	.43	.56	.68	48.0	14.1	3.98	.43	.56	.70	46.1	13.5	4.45	.43	.57	.71	44.0	12.9	4.98	.44	.58	.73
	1600	755	50.7	14.9	3.59	.43	.58	.72	48.8	14.3	4.00	.44	.58	.73	46.8	13.7	4.47	.44	.59	.75	44.7	13.1	5.01	.45	.61	.77
	1800	850	51.3	15.0	3.61	.44	.60	.75	49.4	14.5	4.02	.45	.61	.77	47.4	13.9	4.49	.45	.62	.78	45.1	13.2	5.03	.45	.63	.81
10ACC-048 — CH33-48C-2F COOLING CAPACITY																										
63°F (17°C)	1200	565	44.4	13.0	3.46	.70	.83	.94	42.9	12.6	3.86	.71	.84	.96	41.2	12.1	4.32	.72	.86	.97	39.4	11.5	4.85	.73	.87	.99
	1400	660	45.6	13.4	3.49	.73	.87	.98	44.0	12.9	3.89	.74	.88	.99	42.2	12.4	4.34	.75	.90	1.00	40.4	11.8	4.87	.77	.92	1.00
	1600	755	46.6	13.7	3.51	.76	.91	1.00	44.9	13.2	3.91	.77	.92	1.00	43.2	12.7	4.37	.79	.94	1.00	41.2	12.1	4.91	.80	.96	1.00
67°F (19°C)	1200	565	47.3	13.9	3.52	.56	.67	.79	45.6	13.4	3.93	.56	.68	.81	43.8	12.8	4.40	.57	.69	.82	41.9	12.3	4.93	.57	.71	.84
	1400	660	48.4	14.2	3.55	.57	.70	.84	46.7	13.7	3.96	.58	.72	.85	44.8	13.1	4.42	.58	.73	.87	42.8	12.5	4.96	.59	.75	.89
	1600	755	49.3	14.4	3.57	.59	.74	.88	47.5	13.9	3.98	.60	.75	.90	45.6	13.4	4.44	.60	.76	.91	43.4	12.7	4.98	.62	.78	.93
71°F (22°C)	1200	565	50.4	14.8	3.59	.42	.54	.65	48.6	14.2	4.00	.42	.54	.66	46.7	13.7	4.48	.42	.55	.67	44.6	13.1	5.02	.43	.56	.68
	1400	660	51.5	15.1	3.62	.43	.55	.68	49.6	14.5	4.03	.43	.56	.69	47.6	14.0	4.51	.43	.57	.71	45.5	13.3	5.05	.44	.58	.72
	1600	755	52.3	15.3	3.64	.43	.57	.71	50.4	14.8	4.06	.44	.58	.73	48.4	14.2	4.53	.44	.59	.74	46.2	13.5	5.07	.44	.60	.76
10ACC-048 — CH33-50/60C-2F COOLING CAPACITY																										
63°F (17°C)	1200	565	45.4	13.3	3.47	.70	.83	.94	43.7	12.8	3.87	.71	.84	.96	42.0	12.3	4.32	.72	.85	.97	40.1	11.8	4.85	.73	.87	.99
	1400	660	46.6	13.7	3.50	.73	.87	.98	44.9	13.2	3.90	.74	.88	1.00	43.1	12.6	4.36	.75	.90	1.00	41.1	12.0	4.89	.77	.92	1.00
	1600	755	47.6	14.0	3.52	.76	.91	1.00	45.9	13.5	3.92	.77	.92	1.00	44.1	12.9	4.39	.79	.94	1.00	42.0	12.3	4.92	.81	.96	1.00
67°F (19°C)	1200	565	48.4	14.2	3.54	.55	.67	.79	46.6	13.7	3.94	.56	.68	.81	44.8	13.1	4.40	.56	.69	.82	42.7	12.5	4.94	.57	.71	.84
	1400	660	49.5	14.5	3.57	.57	.71	.84	47.7	14.0	3.97	.58	.71	.85	45.8	13.4	4.44	.58	.73	.87	43.6	12.8	4.98	.59	.75	.89
	1600	755	50.5	14.8	3.58	.59	.73	.88	48.6	14.2	4.00	.59	.75	.90	46.6	13.7	4.47	.60	.76	.91	44.3	13.0	5.00	.62	.78	.94
71°F (22°C)	1200	565	51.5	15.1	3.61	.42	.54	.65	49.7	14.6	4.03	.42	.54	.66	47.7	14.0	4.50	.43	.55	.67	45.5	13.3	5.04	.43	.56	.68
	1400	660	52.7	15.4	3.64	.43	.55	.68	50.8	14.9	4.05	.43	.56	.69	48.7	14.3	4.53	.43	.57	.70	46.4	13.6	5.08	.44	.58	.72
	1600	755	53.7	15.7	3.66	.43	.57	.71	51.6	15.1	4.08	.44	.58	.73	49.5	14.5	4.56	.44	.59	.74	47.2	13.8	5.10	.44	.60	.76
10ACC-048 — CH23-68 COOLING CAPACITY																										
63°F (17°C)	1400	660	46.2	13.5	3.49	.74	.88	1.00	44.5	13.0	3.89	.75	.90	1.00	42.6	12.5	4.35	.76	.92	1.00	40.6	11.9	4.87	.78	.94	1.00
	1600	755	47.2	13.8	3.52	.77	.93	1.00	45.5	13.3	3.92	.78	.94	1.00	43.6	12.8	4.38	.80	.96	1.00	41.6	12.2	4.91	.82	.98	1.00
	1800	850	48.2	14.1	3.54	.81	.96	1.00	46.4	13.6	3.94	.82	.98	1.00	44.6	13.1	4.40	.84	1.00	1.00	42.7	12.5	4.93	.86	1.00	1.00
67°F (19°C)	1400	660	49.0	14.4	3.56	.58	.71	.85	47.1	13.8	3.97	.58	.73	.86	45.1	13.2	4.42	.59	.74	.88	43.0	12.6	4.95	.60	.76	.91
	1600	755	49.9	14.6	3.58	.60	.75	.89	48.0	14.1	3.99	.61	.76	.91	46.0	13.5	4.45	.62	.78	.94	43.7	12.8	4.98	.63	.80	.96
	1800	850	50.7	14.9	3.60	.62	.79	.94	48.7	14.3	4.01	.63	.80	.96	46.6	13.7	4.47	.64	.82	.98	44.3	13.0	5.01	.65	.84	.99
71°F (22°C)	1400	660	52.1	15.3	3.64	.43	.56	.69	50.1	14.7	4.05	.43	.57	.70	48.0	14.1	4.52	.43	.58	.72	45.7	13.4	5.06	.44	.59	.74
	1600	755	53.0	15.5	3.66	.44	.58	.73	50.9	14.9	4.07	.44	.59	.74	48.7	14.3	4.54	.44	.60	.76	46.4	13.6	5.08	.45	.61	.78
	1800	850	53.7	15.7	3.67	.45	.61	.76	51.6	15.1	4.09	.45	.62	.78	49.3	14.4	4.56	.45	.63	.80	46.9	13.7	5.10	.46	.64	.82

RATINGS

NOTE - For Temperatures and Capacities not shown in tables, see bulletin - Cooling Unit Rating Table Correction Factor Data in Miscellaneous Engineering Data section.

Entering Wet Bulb Temperature	Total Air Volume		Outdoor Air Temperature Entering Outdoor Coil																							
			85°F (29°C)						95°F (35°C)						105°F (41°C)						115°F (46°C)					
			Total Cooling Capacity		Comp Motor kW Input	Sensible To Total Ratio (S/T) Dry Bulb			Total Cooling Capacity		Comp Motor kW Input	Sensible To Total Ratio (S/T) Dry Bulb			Total Cooling Capacity		Comp Motor kW Input	Sensible To Total Ratio (S/T) Dry Bulb			Total Cooling Capacity		Comp Motor kW Input	Sensible To Total Ratio (S/T) Dry Bulb		
	cfm	L/s	kBtuh	kW		75°F 24°C	80°F 27°C	85°F 29°C	kBtuh	kW		75°F 24°C	80°F 27°C	85°F 29°C	kBtuh	kW		75°F 24°C	80°F 27°C	85°F 29°C	kBtuh	kW		75°F 24°C	80°F 27°C	85°F 29°C
10ACC-048 — CH33-60D-2F COOLING CAPACITY																										
63°F (17°C)	1400	660	46.6	13.7	3.50	.73	.87	.98	44.9	13.2	3.90	.74	.88	.99	43.2	12.7	4.36	.75	.90	1.00	41.2	12.1	4.90	.77	.92	1.00
	1600	755	47.6	14.0	3.52	.76	.91	1.00	45.9	13.5	3.92	.77	.92	1.00	44.1	12.9	4.39	.79	.94	1.00	42.1	12.3	4.92	.81	.96	1.00
	1800	850	48.5	14.2	3.54	.79	.94	1.00	46.8	13.7	3.95	.80	.96	1.00	44.9	13.2	4.41	.82	.98	1.00	43.0	12.6	4.95	.84	.99	1.00
67°F (19°C)	1400	660	49.5	14.5	3.57	.57	.71	.83	47.7	14.0	3.97	.58	.71	.85	45.8	13.4	4.44	.58	.73	.87	43.7	12.8	4.97	.59	.74	.89
	1600	755	50.4	14.8	3.59	.59	.74	.88	48.5	14.2	3.99	.60	.75	.89	46.5	13.6	4.46	.60	.77	.91	44.3	13.0	5.01	.61	.78	.94
	1800	850	51.1	15.0	3.60	.60	.77	.91	49.2	14.4	4.01	.61	.78	.93	47.2	13.8	4.49	.62	.80	.95	44.9	13.2	5.02	.64	.82	.97
71°F (22°C)	1400	660	52.6	15.4	3.64	.43	.55	.68	50.7	14.9	4.05	.43	.56	.69	48.7	14.3	4.53	.43	.57	.70	46.5	13.6	5.07	.43	.58	.72
	1600	755	53.5	15.7	3.66	.43	.57	.71	51.6	15.1	4.07	.44	.58	.72	49.5	14.5	4.55	.44	.59	.74	47.1	13.8	5.10	.44	.60	.76
	1800	850	54.3	15.9	3.67	.44	.59	.74	52.2	15.3	4.09	.44	.60	.76	50.1	14.7	4.58	.45	.61	.78	47.7	14.0	5.12	.45	.63	.80
10ACC-048 — CH33-44/48B-2F WITH G60UHV-60C-090 COOLING CAPACITY																										
63°F (17°C)	1190	560	43.6	12.8	3.42	.70	.83	.94	42.1	12.3	3.82	.71	.84	.95	40.4	11.8	4.27	.72	.85	.97	38.6	11.3	4.80	.73	.87	.99
	1335	630	44.5	13.0	3.44	.72	.86	.97	42.9	12.6	3.84	.73	.87	.98	41.2	12.1	4.29	.74	.89	1.00	39.4	11.5	4.82	.76	.91	1.00
	1480	700	45.2	13.2	3.46	.74	.88	.99	43.6	12.8	3.86	.75	.90	1.00	41.9	12.3	4.31	.76	.92	1.00	40.0	11.7	4.84	.78	.94	1.00
67°F (19°C)	1190	560	46.4	13.6	3.48	.55	.67	.79	44.8	13.1	3.88	.56	.68	.81	43.0	12.6	4.34	.57	.69	.82	41.1	12.0	4.88	.57	.71	.84
	1335	630	47.3	13.9	3.50	.56	.69	.82	45.6	13.4	3.91	.57	.70	.84	43.7	12.8	4.37	.58	.72	.85	41.8	12.3	4.90	.59	.73	.88
	1480	700	48.0	14.1	3.52	.58	.72	.85	46.2	13.5	3.93	.58	.73	.87	44.4	13.0	4.38	.59	.74	.89	42.3	12.4	4.91	.60	.76	.91
71°F (22°C)	1190	560	49.4	14.5	3.55	.42	.54	.65	47.7	14.0	3.96	.42	.54	.66	45.8	13.4	4.43	.43	.55	.67	43.8	12.8	4.97	.43	.55	.68
	1335	630	50.3	14.7	3.57	.43	.55	.67	48.5	14.2	3.98	.43	.55	.68	46.5	13.6	4.45	.43	.56	.69	44.5	13.0	4.99	.43	.57	.71
	1480	700	51.0	14.9	3.59	.43	.56	.69	49.1	14.4	4.00	.43	.57	.70	47.1	13.8	4.47	.44	.58	.72	45.0	13.2	5.01	.44	.59	.74
10ACC-048 — CH33-48C-2F WITH G60UHV-60C-090 COOLING CAPACITY																										
63°F (17°C)	1335	630	45.2	13.2	3.47	.72	.86	.97	43.6	12.8	3.87	.73	.87	.98	41.9	12.3	4.33	.74	.89	1.00	40.0	11.7	4.85	.76	.91	1.00
	1440	680	45.8	13.4	3.48	.73	.88	.99	44.2	13.0	3.88	.75	.89	1.00	42.4	12.4	4.34	.76	.91	1.00	40.5	11.9	4.87	.77	.93	1.00
	1600	755	46.5	13.6	3.50	.76	.91	1.00	44.9	13.2	3.90	.77	.92	1.00	43.1	12.6	4.36	.79	.94	1.00	41.2	12.1	4.89	.80	.96	1.00
67°F (19°C)	1335	630	48.1	14.1	3.53	.57	.69	.82	46.3	13.6	3.94	.57	.71	.84	44.5	13.0	4.40	.58	.72	.85	42.5	12.5	4.94	.59	.73	.88
	1440	680	48.6	14.2	3.54	.57	.71	.84	46.8	13.7	3.95	.58	.72	.86	44.9	13.2	4.41	.59	.74	.88	42.9	12.6	4.95	.60	.75	.90
	1600	755	49.2	14.4	3.56	.59	.74	.88	47.4	13.9	3.97	.59	.75	.89	45.5	13.3	4.43	.60	.76	.91	43.4	12.7	4.97	.62	.78	.93
71°F (22°C)	1335	630	51.1	15.0	3.60	.42	.55	.67	49.3	14.4	4.01	.43	.55	.68	47.3	13.9	4.49	.43	.56	.69	45.2	13.2	5.02	.43	.57	.71
	1440	680	51.6	15.1	3.61	.43	.56	.69	49.8	14.6	4.03	.43	.56	.70	47.7	14.0	4.51	.43	.57	.71	45.6	13.4	5.04	.44	.58	.73
	1600	755	52.3	15.3	3.63	.43	.57	.71	50.4	14.8	4.05	.44	.58	.73	48.3	14.2	4.52	.44	.59	.74	46.1	13.5	5.06	.44	.60	.76
10ACC-048 — CH33-50/60C-2F WITH G60UHV-60C-090 COOLING CAPACITY																										
63°F (17°C)	1335	630	45.6	13.4	3.48	.72	.86	.97	44.0	12.9	3.88	.73	.87	.98	42.2	12.4	4.33	.74	.89	1.00	40.3	11.8	4.87	.76	.91	1.00
	1440	680	46.2	13.5	3.49	.74	.88	.99	44.6	13.1	3.89	.75	.89	1.00	42.7	12.5	4.35	.76	.91	1.00	40.8	12.0	4.88	.78	.93	1.00
	1600	755	47.0	13.8	3.51	.76	.91	1.00	45.3	13.3	3.91	.77	.92	1.00	43.5	12.7	4.38	.79	.94	1.00	41.5	12.2	4.91	.81	.96	1.00
67°F (19°C)	1335	630	48.5	14.2	3.55	.56	.69	.82	46.8	13.7	3.95	.57	.71	.84	44.9	13.2	4.41	.58	.72	.85	42.8	12.5	4.95	.59	.73	.87
	1440	680	49.1	14.4	3.56	.57	.71	.84	47.3	13.9	3.97	.58	.72	.86	45.3	13.3	4.43	.59	.74	.88	43.2	12.7	4.97	.60	.75	.90
	1600	755	49.8	14.6	3.57	.59	.73	.88	47.9	14.0	3.99	.59	.75	.89	45.9	13.5	4.46	.60	.76	.91	43.8	12.8	4.99	.62	.78	.94
71°F (22°C)	1335	630	51.7	15.2	3.62	.43	.55	.67	49.8	14.6	4.03	.43	.55	.68	47.8	14.0	4.51	.43	.56	.69	45.6	13.4	5.05	.43	.57	.71
	1440	680	52.2	15.3	3.64	.43	.56	.69	50.3	14.7	4.05	.43	.56	.70	48.2	14.1	4.52	.43	.57	.71	46.0	13.5	5.07	.44	.58	.73
	1600	755	52.9	15.5	3.65	.43	.57	.71	51.0	14.9	4.07	.44	.58	.73	48.8	14.3	4.55	.44	.59	.74	46.6	13.7	5.09	.44	.60	.76
10ACC-048 — CH33-60D-2F WITH G60UHV-60D-135 COOLING CAPACITY																										
63°F (17°C)	1440	680	46.2	13.5	3.50	.73	.88	.99	44.5	13.0	3.90	.75	.89	1.00	42.8	12.5	4.35	.76	.91	1.00	40.8	12.0	4.89	.78	.93	1.00
	1600	755	47.0	13.8	3.51	.76	.91	1.00	45.3	13.3	3.91	.77	.92	1.00	43.5	12.7	4.38	.79	.94	1.00	41.5	12.2	4.91	.81	.96	1.00
	1760	830	47.7	14.0	3.53	.78	.94	1.00	46.0	13.5	3.93	.80	.95	1.00	44.2	13.0	4.40	.81	.97	1.00	42.2	12.4	4.93	.83	.99	1.00
67°F (19°C)	1440	680	49.0	14.4	3.56	.57	.71	.85	47.3	13.9	3.97	.58	.72	.86	45.3	13.3	4.43	.59	.74	.88	43.2	12.7	4.97	.60	.75	.90
	1600	755	49.7	14.6	3.58	.59	.74	.88	47.9	14.0	3.98	.59	.75	.89	45.9	13.5	4.45	.60	.76	.91	43.7	12.8	4.99	.62	.78	.93
	1760	830	50.3	14.7	3.59	.60	.76	.91	48.4	14.2	4.00	.61	.77	.93	46.4	13.6	4.47	.62	.79	.94	44.2	13.0	5.01	.63	.81	.96
71°F (22°C)	1440	680	52.1	15.3	3.63	.43	.56	.69	50.3	14.7	4.05	.43	.56	.70	48.2	14.1	4.52	.43	.57	.71	46.0	13.5	5.06	.44	.58	.73
	1600	755	52.8	15.5	3.65	.43	.57	.71	50.9	14.9	4.06	.44	.58	.72	48.8	14.3	4.54	.44	.59	.74	46.5	13.6	5.09	.44	.60	.76
	1760	830	53.4	15.6	3.66	.44	.59	.74	51.4	15.1	4.08	.44	.60	.75	49.3	14.4	4.56	.45	.61	.77	47.0	13.8	5.10	.45	.62	.79
10ACC-048 — CH23-51 WITH GHR32V5-100 COOLING CAPACITY																										
63°F (17°C)	1260	595	42.7	12.5	3.41	.71	.85	.96	41.2	12.1	3.80	.72	.86	.97	39.6	11.6	4.25	.73	.88	.99	37.9	11.1	4.78	.75	.89	1.00
	1460	690	43.7	12.8	3.43	.74	.89	.99	42.2	12.4	3.82	.75	.90	1.00	40.6	11.9	4.28	.77	.92	1.00	38.8	11.4	4.80	.79	.94	1.00
	1660	785	44.6	13.1	3.45	.78	.92	1.00	43.0	12.6	3.85	.79	.94	1.00	41.4	12.1	4.30	.80	.96	1.00	39.6	11.6	4.82	.82	.97	1.00
67°F (19°C)	1260	595	45.3	13.3	3.46	.56	.69	.81	43.8	12.8	3.86	.57	.70	.83	42.0	12.3	4.32	.57	.71	.84	40.1	11.8	4.85	.58	.73	.86
	1460	690	46.3	13.6	3.48	.58	.72	.86	44.6	13.1	3.88	.59	.73	.87	42.8	12.5	4.34	.59	.75	.89	40.9	12.0	4.88	.60	.76	.91
	1660	785	47.0	13.8	3.50	.60	.75	.90	45.3	13.3	3.90	.60	.77	.91	43.5	12.7	4.37	.62	.78	.93	41.5	12.2	4.89	.62	.80	.95
71°F (22°C)	1260	595	48.2	14.1	3.53	.42	.54	.66	46.5	13.6	3.93	.43	.55	.67	44.7	13.1	4.40	.43	.56	.69	42.7	12.5	4.93	.43	.57	.70
	1460	690	49.1	14.4	3.55	.43	.56	.70	47.4	13.9	3.96	.43	.57	.71	45.5	13.3	4.42	.44	.58	.72	43.4	12.7	4.96	.44	.59	.74
	1660	785	49.8	14.6	3.57	.44	.58	.73	48.0	14.1	3.97	.44	.59	.75	46.1	13.5	4.45	.44	.60	.76	44.0	12.9	4.98	.45	.61	.78
10ACC-048 — CH23-65 WITH GHR32V5-100 COOLING CAPACITY																										
63°F (17°C)	1260	595	43.1	12.6	3.42	.71	.84	.96	41.6	12.2	3.81	.72	.86	.97	40.0	11.7	4.26	.73	.87	.99	38.2	11.2	4.78	.75	.89	1.00
	1460	690	44.2	13.0	3.44	.74	.88	.99	42.6	12.5	3.84	.75	.90	1.00	41.0	12.0	4.29	.77	.92	1.00	39.1	11.5	4.81	.79	.94	1.00
	1660	785	45.1	13.2	3.46	.77	.92	1.00	43.5	12.7	3.86	.79	.94	1.00	41.8	12.3	4.31	.80	.96	1.00	40.0	11.7	4.84	.82	.98	1.00
67°F (19°C)	1260	595	45.9	13.5	3.48	.56	.69	.81	44.2	13.0	3.88	.57	.70	.83	42.4	12.4	4.34	.57	.71	.84	40.5	11.9	4.86	.58	.72	.86
	1460	690	46.8	13.7	3.50	.58	.72	.86	45.1	13.2	3.90	.59	.73	.87	43.3	12.7	4.36	.59	.75	.89	41.3	12.1	4.89	.60	.76	.91
	1660	785	47.6	14.0	3.52	.60	.75	.90	45.9	13.5	3.92	.60	.76	.91	44.0	12.9	4.38	.61	.78	.93	41.9	12.3	4.91	.63	.80	.95
71°F (22°C)	1260	595	48.8	14.3	3.54	.42	.54	.66	47.0	13.8	3.95	.43	.55	.67	45.2	13.2	4.42	.43	.56	.68	43.1	12.6	4.96	.43	.57	.70
	1460	690	49.7	14.6	3.57	.43	.56	.70	47.9	14.0	3.98	.43	.57	.71	46.0	13.5	4.45	.43	.58	.72	43.9	12.9	4.98	.44	.59	.74
	1660	785	50.5	14.8	3.59	.44	.58	.73	48.6	14.2	4.00	.44	.59	.74	46.7	13.7	4.46	.44	.60	.76	44.5	13.0	5.00	.45	.61	.78

RATINGS

NOTE - For Temperatures and Capacities not shown in tables, see bulletin - Cooling Unit Rating Table Correction Factor Data in Miscellaneous Engineering Data section.

Entering Wet Bulb Temperature	Total Air Volume		Outdoor Air Temperature Entering Outdoor Coil																							
			85°F (29°C)						95°F (35°C)						105°F (41°C)						115°F (46°C)					
			Total Cooling Capacity		Comp Motor kW Input	Sensible To Total Ratio (S/T) Dry Bulb			Total Cooling Capacity		Comp Motor kW Input	Sensible To Total Ratio (S/T) Dry Bulb			Total Cooling Capacity		Comp Motor kW Input	Sensible To Total Ratio (S/T) Dry Bulb			Total Cooling Capacity		Comp Motor kW Input	Sensible To Total Ratio (S/T) Dry Bulb		
	cfm	L/s	kBtuh	kW		75°F 24°C	80°F 27°C	85°F 29°C	kBtuh	kW		75°F 24°C	80°F 27°C	85°F 29°C	kBtuh	kW		75°F 24°C	80°F 27°C	85°F 29°C	kBtuh	kW		75°F 24°C	80°F 27°C	85°F 29°C
10ACC-048 — CH23-68 WITH GHR32V5-100 COOLING CAPACITY																										
63°F (17°C)	1260	595	45.0	13.2	3.46	.72	.85	.97	43.3	12.7	3.86	.72	.86	.98	41.5	12.2	4.31	.74	.88	1.00	39.6	11.6	4.83	.75	.90	1.00
	1460	690	46.1	13.5	3.49	.75	.89	1.00	44.4	13.0	3.89	.76	.91	1.00	42.6	12.5	4.34	.78	.93	1.00	40.6	11.9	4.87	.79	.95	1.00
	1660	785	47.1	13.8	3.51	.78	.94	1.00	45.4	13.3	3.92	.80	.95	1.00	43.5	12.7	4.37	.81	.97	1.00	41.6	12.2	4.90	.83	.99	1.00
67°F (19°C)	1260	595	47.8	14.0	3.53	.56	.69	.82	46.0	13.5	3.93	.57	.70	.83	44.1	12.9	4.39	.58	.71	.85	42.0	12.3	4.92	.58	.73	.87
	1460	690	48.9	14.3	3.56	.58	.72	.86	47.1	13.8	3.96	.59	.74	.88	45.0	13.2	4.42	.60	.75	.90	42.9	12.6	4.95	.61	.77	.92
	1660	785	49.8	14.6	3.58	.60	.76	.91	47.8	14.0	3.98	.61	.78	.93	45.8	13.4	4.45	.62	.79	.95	43.6	12.8	4.98	.63	.81	.97
71°F (22°C)	1260	595	50.9	14.9	3.60	.42	.54	.66	49.0	14.4	4.02	.43	.55	.68	47.0	13.8	4.49	.43	.56	.69	44.7	13.1	5.02	.43	.57	.70
	1460	690	52.0	15.2	3.63	.43	.57	.70	50.0	14.7	4.05	.43	.57	.71	47.9	14.0	4.51	.44	.58	.73	45.6	13.4	5.05	.44	.59	.75
	1660	785	52.8	15.5	3.65	.44	.59	.74	50.7	14.9	4.07	.44	.60	.75	48.6	14.2	4.54	.45	.61	.77	46.2	13.5	5.08	.45	.62	.79
10ACC-048 — CB30M-41 - CB30U-41/46 COOLING CAPACITY																										
63°F (17°C)	1050	495	41.1	12.0	3.38	.68	.80	.91	39.7	11.6	3.77	.69	.81	.93	38.2	11.2	4.21	.70	.83	.94	36.5	10.7	4.74	.71	.84	.96
	1250	590	42.4	12.4	3.41	.71	.85	.96	40.9	12.0	3.80	.72	.86	.97	39.3	11.5	4.25	.73	.88	.99	37.6	11.0	4.77	.75	.89	1.00
	1450	685	43.4	12.7	3.43	.75	.89	1.00	41.9	12.3	3.83	.76	.90	1.00	40.3	11.8	4.28	.77	.92	1.00	38.5	11.3	4.80	.79	.94	1.00
67°F (19°C)	1050	495	43.8	12.8	3.44	.55	.66	.77	42.3	12.4	3.83	.55	.66	.78	40.6	11.9	4.29	.56	.67	.79	38.8	11.4	4.82	.56	.69	.81
	1250	590	45.0	13.2	3.47	.56	.69	.81	43.4	12.7	3.86	.57	.70	.83	41.7	12.2	4.32	.57	.71	.84	39.8	11.7	4.85	.58	.73	.86
	1450	685	46.0	13.5	3.49	.58	.72	.86	44.3	13.0	3.89	.59	.73	.87	42.5	12.5	4.35	.60	.75	.89	40.6	11.9	4.87	.60	.76	.91
71°F (22°C)	1050	495	46.6	13.7	3.51	.42	.53	.63	45.0	13.2	3.91	.42	.53	.64	43.3	12.7	4.37	.42	.54	.65	41.4	12.1	4.90	.43	.54	.66
	1250	590	47.9	14.0	3.53	.42	.54	.66	46.2	13.5	3.94	.43	.55	.67	44.4	13.0	4.41	.43	.56	.68	42.4	12.4	4.94	.43	.57	.70
	1450	685	48.9	14.3	3.56	.43	.56	.70	47.1	13.8	3.97	.43	.57	.71	45.2	13.2	4.43	.44	.58	.72	43.1	12.6	4.96	.44	.59	.74
10ACC-048 — CB30M-46 COOLING CAPACITY																										
63°F (17°C)	1250	590	42.2	12.4	3.40	.71	.85	.96	40.7	11.9	3.79	.72	.86	.97	39.1	11.5	4.25	.74	.88	.99	37.4	11.0	4.76	.75	.90	1.00
	1400	660	43.0	12.6	3.42	.74	.88	.99	41.5	12.2	3.82	.75	.89	1.00	39.9	11.7	4.27	.76	.91	1.00	38.1	11.2	4.78	.78	.93	1.00
	1550	730	43.7	12.8	3.44	.76	.91	1.00	42.2	12.4	3.83	.77	.92	1.00	40.5	11.9	4.28	.79	.94	1.00	38.7	11.3	4.81	.80	.96	1.00
67°F (19°C)	1250	590	44.8	13.1	3.46	.56	.69	.82	43.2	12.7	3.86	.57	.70	.83	41.5	12.2	4.32	.57	.71	.84	39.6	11.6	4.84	.58	.73	.86
	1400	660	45.6	13.4	3.48	.57	.71	.85	43.9	12.9	3.88	.58	.72	.86	42.1	12.3	4.34	.59	.74	.88	40.2	11.8	4.86	.60	.76	.90
	1550	730	46.2	13.5	3.49	.59	.74	.88	44.5	13.0	3.90	.60	.75	.89	42.7	12.5	4.35	.60	.77	.91	40.7	11.9	4.88	.61	.78	.93
71°F (22°C)	1250	590	47.7	14.0	3.53	.42	.54	.66	46.0	13.5	3.94	.43	.55	.67	44.2	13.0	4.40	.43	.56	.69	42.2	12.4	4.93	.43	.57	.70
	1400	660	48.4	14.2	3.55	.43	.56	.69	46.7	13.7	3.95	.43	.57	.70	44.8	13.1	4.42	.43	.57	.71	42.8	12.5	4.95	.44	.58	.73
	1550	730	49.0	14.4	3.56	.43	.57	.71	47.2	13.8	3.97	.44	.58	.73	45.3	13.3	4.43	.44	.59	.74	43.2	12.7	4.97	.44	.60	.76
10ACC-048 — CB29M-51 - CB28UH-048 COOLING CAPACITY																										
63°F (17°C)	1300	615	43.5	12.7	3.42	.72	.86	.97	41.9	12.3	3.82	.73	.87	.98	40.3	11.8	4.27	.74	.89	1.00	38.5	11.3	4.79	.76	.91	1.00
	1450	685	44.2	13.0	3.44	.75	.89	1.00	42.7	12.5	3.84	.76	.90	1.00	41.0	12.0	4.29	.77	.92	1.00	39.2	11.5	4.81	.79	.94	1.00
	1600	755	44.9	13.2	3.46	.77	.92	1.00	43.3	12.7	3.85	.78	.93	1.00	41.7	12.2	4.30	.80	.95	1.00	39.8	11.7	4.83	.81	.97	1.00
67°F (19°C)	1300	615	46.1	13.5	3.48	.57	.70	.82	44.5	13.0	3.88	.57	.71	.84	42.7	12.5	4.34	.58	.72	.86	40.8	12.0	4.86	.59	.74	.88
	1450	685	46.8	13.7	3.50	.58	.72	.86	45.1	13.2	3.90	.59	.73	.87	43.3	12.7	4.36	.59	.75	.89	41.3	12.1	4.89	.61	.77	.91
	1600	755	47.4	13.9	3.51	.59	.74	.89	45.7	13.4	3.92	.60	.76	.90	43.8	12.8	4.37	.61	.77	.92	41.8	12.3	4.91	.62	.79	.94
71°F (22°C)	1300	615	49.1	14.4	3.55	.43	.55	.67	47.3	13.9	3.96	.43	.56	.68	45.4	13.3	4.43	.43	.56	.70	43.4	12.7	4.96	.43	.57	.71
	1450	685	49.8	14.6	3.57	.43	.56	.70	47.9	14.0	3.98	.43	.57	.71	46.0	13.5	4.44	.43	.58	.72	43.9	12.9	4.98	.44	.59	.74
	1600	755	50.3	14.7	3.58	.44	.58	.72	48.5	14.2	3.99	.44	.59	.74	46.5	13.6	4.46	.44	.60	.75	44.4	13.0	4.99	.45	.61	.77
10ACC-048 — CB29M-65 - CB28UH-060 COOLING CAPACITY																										
63°F (17°C)	1400	660	44.2	13.0	3.44	.74	.88	.99	42.6	12.5	3.84	.75	.89	1.00	40.9	12.0	4.29	.76	.91	1.00	39.1	11.5	4.81	.78	.93	1.00
	1600	755	45.1	13.2	3.46	.77	.92	1.00	43.5	12.7	3.86	.78	.93	1.00	41.8	12.3	4.31	.79	.95	1.00	40.0	11.7	4.84	.81	.97	1.00
	1800	850	45.9	13.5	3.48	.80	.95	1.00	44.3	13.0	3.88	.81	.97	1.00	42.6	12.5	4.34	.83	.98	1.00	40.8	12.0	4.86	.85	1.00	1.00
67°F (19°C)	1400	660	46.8	13.7	3.50	.57	.71	.85	45.1	13.2	3.90	.58	.73	.86	43.3	12.7	4.36	.59	.74	.88	41.3	12.1	4.89	.60	.76	.90
	1600	755	47.6	14.0	3.52	.59	.75	.89	45.8	13.4	3.92	.60	.76	.90	44.0	12.9	4.38	.61	.78	.92	41.9	12.3	4.91	.62	.79	.94
	1800	850	48.2	14.1	3.53	.61	.78	.93	46.5	13.6	3.94	.62	.79	.94	44.6	13.1	4.40	.63	.81	.96	42.5	12.5	4.93	.64	.83	.98
71°F (22°C)	1400	660	49.7	14.6	3.57	.43	.56	.69	47.9	14.0	3.98	.43	.57	.70	46.0	13.5	4.44	.43	.57	.72	43.9	12.9	4.98	.44	.59	.73
	1600	755	50.5	14.8	3.58	.44	.58	.72	48.6	14.2	4.00	.44	.59	.74	46.7	13.7	4.46	.44	.60	.75	44.5	13.0	5.00	.45	.61	.77
	1800	850	51.1	15.0	3.60	.44	.60	.76	49.3	14.4	4.01	.45	.61	.77	47.2	13.8	4.48	.45	.62	.79	45.0	13.2	5.02	.46	.63	.81
10ACC-048 — CB30M-51 - CB30U-51 COOLING CAPACITY																										
63°F (17°C)	1400	660	45.3	13.3	3.46	.73	.87	.99	43.6	12.8	3.86	.75	.89	1.00	41.8	12.3	4.31	.76	.91	1.00	39.9	11.7	4.84	.78	.93	1.00
	1600	755	46.3	13.6	3.49	.77	.92	1.00	44.6	13.1	3.89	.78	.93	1.00	42.7	12.5	4.34	.79	.95	1.00	40.8	12.0	4.87	.81	.97	1.00
	1800	850	47.1	13.8	3.51	.80	.96	1.00	45.4	13.3	3.91	.81	.97	1.00	43.6	12.8	4.37	.83	.99	1.00	41.7	12.2	4.89	.85	1.00	1.00
67°F (19°C)	1400	660	48.1	14.1	3.53	.57	.71	.84	46.3	13.6	3.93	.58	.72	.86	44.3	13.0	4.40	.59	.74	.88	42.2	12.4	4.92	.60	.75	.90
	1600	755	48.9	14.3	3.55	.59	.74	.89	47.1	13.8	3.96	.60	.76	.90	45.1	13.2	4.42	.61	.77	.93	42.9	12.6	4.95	.62	.79	.95
	1800	850	49.6	14.5	3.57	.61	.78	.93	47.7	14.0	3.97	.62	.79	.95	45.7	13.4	4.44	.63	.81	.96	43.5	12.7	4.97	.65	.83	.98
71°F (22°C)	1400	660	51.1	15.0	3.60	.43	.56	.69	49.2	14.4	4.02	.43	.57	.70	47.2	13.8	4.49	.43	.57	.71	44.9	13.2	5.02	.44	.58	.73
	1600	755	52.0	15.2	3.63	.43	.58	.72	50.0	14.7	4.04	.44	.59	.74	47.9	14.0	4.51	.44	.60	.75	45.6	13.4	5.04	.45	.61	.77
	1800	850	52.7	15.4	3.64	.44	.60	.76	50.7	14.9	4.06	.45	.61	.77	48.5	14.2	4.53	.45	.62	.79	46.1	13.5	5.06	.46	.64	.81
10ACC-048 — CB31MV-51 COOLING CAPACITY																										
63°F (17°C)	1425	675	45.6	13.4	3.47	.74	.88	.99	43.9	12.9	3.87	.75	.90	1.00	42.1	12.3	4.33	.76	.91	1.00	40.2	11.8	4.85	.78	.94	1.00
	1625	765	46.6	13.7	3.50	.77	.92	1.00	44.9	13.2	3.90	.78	.94	1.00	43.0	12.6	4.36	.80	.96	1.00	41.1	12.0	4.88	.82	.98	1.00
	1805	850	47.4	13.9	3.52	.80	.96	1.00	45.6	13.4	3.92	.81	.97	1.00	43.8	12.8	4.38	.83	.99	1.00	41.9	12.3	4.91	.85	1.00	1.00
67°F (19°C)	1425	675	48.4	14.2	3.54	.58	.71	.85	46.6	13.7	3.95	.58	.73	.86	44.6	13.1	4.41	.59	.74	.88	42.5	12.5	4.94	.60	.76	.91
	1625	765	49.2	14.4	3.56	.60	.75	.89	47.4	13.9	3.97	.60	.76	.91	45.4	13.3	4.43	.61	.78	.93	43.2	12.7	4.96	.62	.80	.95
	1805	850	49.9	14.6	3.58	.61	.78	.93	48.0	14.1	3.98	.62	.79	.95	45.9	13.5	4.45	.63	.81	.97	43.7	12.8	4.98	.64	.83	.98
71°F (22°C)	1425	675	51.5	15.1	3.61	.43	.56	.69	49.6	14.5	4.03	.43	.57	.70	47.5	13.9	4.50	.43	.57	.72	45.2	13.2	5.03	.44	.59	.74
	1625	765	52.3	15.3	3.64	.44	.58	.72	50.3	14.7	4.05	.44	.59	.74	48.2	14.1	4.52	.44	.60	.76	45.9	13.5	5.06	.45	.61	.77
	1805	850	52.9	15.5	3.65	.44	.60	.75	50.9	14.9	4.07	.45	.61	.77	48.7	14.3	4.54	.45	.62	.79	46.3	13.6	5.08	.46	.63	.81

RATINGS

NOTE - For Temperatures and Capacities not shown in tables, see bulletin - Cooling Unit Rating Table Correction Factor Data in Miscellaneous Engineering Data section.

Entering Wet Bulb Temperature	Total Air Volume		Outdoor Air Temperature Entering Outdoor Coil																							
			85°F (29°C)						95°F (35°C)						105°F (41°C)						115°F (46°C)					
			Total Cooling Capacity		Comp Motor kW Input	Sensible To Total Ratio (S/T) Dry Bulb			Total Cooling Capacity		Comp Motor kW Input	Sensible To Total Ratio (S/T) Dry Bulb			Total Cooling Capacity		Comp Motor kW Input	Sensible To Total Ratio (S/T) Dry Bulb			Total Cooling Capacity		Comp Motor kW Input	Sensible To Total Ratio (S/T) Dry Bulb		
	cfm	L/s	kBtuh	kW		75°F 24°C	80°F 27°C	85°F 29°C	kBtuh	kW		75°F 24°C	80°F 27°C	85°F 29°C	kBtuh	kW		75°F 24°C	80°F 27°C	85°F 29°C	kBtuh	kW		75°F 24°C	80°F 27°C	85°F 29°C
10ACC-048 — CB30M-65 - CB30U-65 COOLING CAPACITY																										
63°F (17°C)	1400	660	46.8	13.7	3.50	.73	.88	.99	45.1	13.2	3.90	.75	.89	1.00	43.3	12.7	4.36	.76	.91	1.00	41.2	12.1	4.89	.78	.93	1.00
	1600	755	47.8	14.0	3.52	.77	.92	1.00	46.1	13.5	3.92	.78	.93	1.00	44.2	13.0	4.39	.80	.95	1.00	42.2	12.4	4.92	.82	.97	1.00
	1800	850	48.7	14.3	3.54	.80	.95	1.00	47.0	13.8	3.95	.81	.97	1.00	45.1	13.2	4.41	.83	.99	1.00	43.1	12.6	4.94	.85	1.00	1.00
67°F (19°C)	1400	660	49.7	14.6	3.56	.57	.71	.84	47.8	14.0	3.97	.58	.72	.86	45.9	13.5	4.44	.59	.73	.88	43.7	12.8	4.97	.60	.75	.90
	1600	755	50.6	14.8	3.59	.59	.74	.89	48.7	14.3	4.00	.60	.76	.90	46.6	13.7	4.46	.61	.77	.92	44.4	13.0	5.00	.62	.79	.95
	1800	850	51.3	15.0	3.60	.61	.78	.93	49.4	14.5	4.01	.62	.79	.94	47.3	13.9	4.48	.63	.81	.96	45.0	13.2	5.02	.64	.83	.98
71°F (22°C)	1400	660	52.9	15.5	3.64	.43	.56	.68	50.9	14.9	4.06	.43	.56	.70	48.8	14.3	4.53	.43	.57	.71	46.5	13.6	5.07	.44	.58	.73
	1600	755	53.8	15.8	3.66	.43	.58	.72	51.7	15.2	4.08	.44	.59	.73	49.5	14.5	4.55	.44	.60	.75	47.2	13.8	5.10	.44	.61	.77
	1800	850	54.5	16.0	3.68	.44	.60	.75	52.4	15.4	4.10	.44	.61	.77	50.1	14.7	4.57	.45	.62	.79	47.7	14.0	5.12	.45	.64	.81
10ACC-048 — CB31MV-65 COOLING CAPACITY																										
63°F (17°C)	1425	675	47.0	13.8	3.51	.74	.88	1.00	45.3	13.3	3.91	.75	.90	1.00	43.5	12.7	4.37	.76	.91	1.00	41.5	12.2	4.90	.78	.93	1.00
	1625	765	48.1	14.1	3.53	.77	.92	1.00	46.3	13.6	3.94	.78	.94	1.00	44.4	13.0	4.40	.80	.96	1.00	42.4	12.4	4.93	.82	.98	1.00
	1805	850	48.9	14.3	3.55	.80	.96	1.00	47.1	13.8	3.96	.82	.97	1.00	45.2	13.2	4.42	.83	.99	1.00	43.2	12.7	4.96	.85	1.00	1.00
67°F (19°C)	1425	675	49.9	14.6	3.57	.58	.71	.85	48.1	14.1	3.99	.58	.73	.86	46.0	13.5	4.45	.59	.74	.88	43.9	12.9	4.98	.60	.76	.91
	1625	765	50.8	14.9	3.60	.59	.75	.89	48.9	14.3	4.01	.60	.76	.91	46.8	13.7	4.47	.61	.78	.93	44.6	13.1	5.01	.62	.80	.95
	1805	850	51.5	15.1	3.61	.61	.78	.93	49.5	14.5	4.02	.62	.79	.95	47.4	13.9	4.49	.63	.81	.97	45.1	13.2	5.03	.64	.83	.98
71°F (22°C)	1425	675	53.1	15.6	3.65	.43	.56	.69	51.1	15.0	4.07	.43	.57	.70	49.0	14.4	4.55	.43	.58	.72	46.7	13.7	5.09	.44	.59	.73
	1625	765	54.0	15.8	3.68	.44	.58	.72	51.9	15.2	4.09	.44	.59	.74	49.7	14.6	4.57	.44	.60	.76	47.3	13.9	5.11	.45	.61	.78
	1805	850	54.6	16.0	3.69	.44	.60	.76	52.5	15.4	4.11	.45	.61	.77	50.2	14.7	4.58	.45	.62	.79	47.8	14.0	5.13	.46	.64	.81
10ACC-060 — C26-51/65 COOLING CAPACITY																										
63°F (17°C)	1400	660	53.9	15.8	4.54	.72	.85	.96	52.0	15.2	5.04	.73	.86	.98	50.1	14.7	5.61	.74	.87	.99	48.1	14.1	6.28	.75	.89	1.00
	1600	755	55.3	16.2	4.56	.74	.88	1.00	53.4	15.6	5.06	.75	.89	1.00	51.4	15.1	5.63	.77	.91	1.00	49.3	14.4	6.29	.78	.93	1.00
	1800	850	56.4	16.5	4.59	.77	.92	1.00	54.5	16.0	5.07	.78	.93	1.00	52.5	15.4	5.64	.79	.95	1.00	50.4	14.8	6.30	.81	.96	1.00
67°F (19°C)	1400	660	57.4	16.8	4.62	.57	.69	.81	55.5	16.3	5.11	.58	.70	.82	53.5	15.7	5.67	.58	.71	.84	51.4	15.1	6.33	.59	.72	.85
	1600	755	58.6	17.2	4.67	.59	.72	.85	56.7	16.6	5.15	.59	.73	.86	54.5	16.0	5.72	.60	.74	.88	52.4	15.4	6.37	.61	.75	.89
	1800	850	59.6	17.5	4.70	.60	.75	.88	57.6	16.9	5.19	.61	.76	.90	55.4	16.2	5.75	.61	.77	.92	53.2	15.6	6.41	.62	.78	.93
71°F (22°C)	1400	660	61.0	17.9	4.76	.44	.55	.67	59.0	17.3	5.25	.44	.56	.67	56.9	16.7	5.81	.44	.56	.68	54.7	16.0	6.48	.44	.57	.69
	1600	755	62.2	18.2	4.80	.44	.57	.69	60.2	17.6	5.29	.44	.57	.70	58.0	17.0	5.86	.45	.58	.71	55.7	16.3	6.53	.45	.59	.73
	1800	850	63.2	18.5	4.84	.45	.58	.72	61.1	17.9	5.33	.45	.59	.73	58.8	17.2	5.90	.45	.60	.75	56.5	16.6	6.56	.46	.61	.76
10ACC-060 — C23-51/65 COOLING CAPACITY																										
63°F (17°C)	1600	755	56.1	16.4	4.61	.74	.87	.99	54.2	15.9	5.12	.75	.89	1.00	52.2	15.3	5.69	.76	.90	1.00	50.1	14.7	6.37	.77	.92	1.00
	1800	850	57.3	16.8	4.62	.76	.91	1.00	55.3	16.2	5.13	.77	.92	1.00	53.3	15.6	5.70	.78	.94	1.00	51.2	15.0	6.38	.80	.95	1.00
	2000	945	58.3	17.1	4.65	.78	.94	1.00	56.3	16.5	5.14	.80	.95	1.00	54.2	15.9	5.71	.81	.97	1.00	52.1	15.3	6.39	.83	.99	1.00
67°F (19°C)	1600	755	59.7	17.5	4.70	.58	.71	.84	57.8	16.9	5.19	.59	.72	.85	55.6	16.3	5.75	.59	.73	.87	53.4	15.6	6.42	.60	.74	.88
	1800	850	60.7	17.8	4.73	.60	.74	.87	58.7	17.2	5.22	.60	.75	.89	56.5	16.6	5.80	.61	.76	.91	54.3	15.9	6.46	.62	.77	.92
	2000	945	61.6	18.1	4.76	.61	.76	.91	59.5	17.4	5.25	.62	.77	.92	57.2	16.8	5.83	.63	.79	.94	55.0	16.1	6.49	.63	.80	.96
71°F (22°C)	1600	755	63.4	18.6	4.83	.44	.56	.69	61.4	18.0	5.33	.44	.57	.69	59.1	17.3	5.90	.44	.58	.71	56.9	16.7	6.57	.45	.58	.72
	1800	850	64.4	18.9	4.87	.45	.58	.71	62.3	18.3	5.36	.45	.58	.72	60.0	17.6	5.94	.45	.59	.74	57.7	16.9	6.62	.45	.60	.75
	2000	945	65.3	19.1	4.90	.45	.59	.74	63.1	18.5	5.39	.45	.60	.75	60.7	17.8	5.97	.46	.61	.77	58.4	17.1	6.65	.46	.62	.78
10ACC-060 — C33-50/60C COOLING CAPACITY																										
63°F (17°C)	1400	660	55.3	16.2	4.63	.72	.84	.95	53.4	15.6	5.15	.72	.85	.97	51.5	15.1	5.74	.73	.87	.98	49.5	14.5	6.42	.74	.88	1.00
	1600	755	56.7	16.6	4.65	.74	.87	.99	54.8	16.1	5.17	.75	.89	1.00	52.8	15.5	5.75	.76	.90	1.00	50.7	14.9	6.44	.77	.92	1.00
	1800	850	57.9	17.0	4.66	.76	.90	1.00	55.9	16.4	5.18	.77	.92	1.00	53.8	15.8	5.76	.78	.93	1.00	51.7	15.2	6.45	.80	.95	1.00
67°F (19°C)	1400	660	59.2	17.3	4.68	.57	.69	.80	57.2	16.8	5.19	.57	.70	.82	55.1	16.1	5.79	.58	.70	.83	53.0	15.5	6.47	.58	.71	.84
	1600	755	60.5	17.7	4.70	.58	.71	.84	58.5	17.1	5.20	.59	.72	.85	56.3	16.5	5.80	.59	.73	.86	54.1	15.9	6.48	.60	.74	.88
	1800	850	61.5	18.0	4.73	.59	.73	.87	59.5	17.4	5.23	.60	.74	.88	57.3	16.8	5.81	.61	.76	.90	55.0	16.1	6.49	.61	.77	.92
71°F (22°C)	1400	660	63.0	18.5	4.78	.44	.55	.66	60.9	17.8	5.28	.44	.55	.67	58.8	17.2	5.86	.44	.56	.68	56.6	16.6	6.54	.44	.56	.69
	1600	755	64.2	18.8	4.83	.44	.56	.68	62.2	18.2	5.33	.44	.57	.69	59.9	17.6	5.91	.44	.57	.70	57.6	16.9	6.58	.45	.58	.72
	1800	850	65.2	19.1	4.86	.44	.58	.71	63.1	18.5	5.36	.45	.58	.72	60.8	17.8	5.94	.45	.59	.73	58.5	17.1	6.62	.45	.60	.75
10ACC-060 — C33-60D COOLING CAPACITY																										
63°F (17°C)	1800	850	58.7	17.2	4.66	.76	.90	1.00	56.7	16.6	5.17	.77	.92	1.00	54.6	16.0	5.75	.78	.93	1.00	52.4	15.4	6.43	.80	.95	1.00
	2000	945	59.8	17.5	4.67	.78	.93	1.00	57.7	16.9	5.18	.79	.95	1.00	55.6	16.3	5.76	.81	.96	1.00	53.4	15.6	6.44	.82	.98	1.00
	2200	1040	60.6	17.8	4.70	.80	.96	1.00	58.6	17.2	5.19	.82	.98	1.00	56.4	16.5	5.77	.83	.99	1.00	54.2	15.9	6.45	.85	1.00	1.00
67°F (19°C)	1800	850	62.3	18.3	4.75	.59	.73	.87	60.2	17.6	5.25	.60	.74	.88	58.0	17.0	5.82	.61	.76	.90	55.7	16.3	6.49	.61	.77	.92
	2000	945	63.2	18.5	4.78	.61	.76	.90	61.0	17.9	5.28	.61	.77	.92	58.7	17.2	5.85	.62	.78	.93	56.4	16.5	6.53	.63	.80	.95
	2200	1040	63.9	18.7	4.81	.62	.78	.93	61.7	18.1	5.30	.63	.79	.95	59.4	17.4	5.88	.64	.81	.97	57.0	16.7	6.55	.65	.83	.98
71°F (22°C)	1800	850	66.1	19.4	4.88	.45	.58	.71	63.9	18.7	5.38	.45	.58	.72	61.6	18.1	5.96	.45	.59	.73	59.2	17.3	6.64	.45	.60	.75
	2000	945	66.9	19.6	4.91	.45	.59	.73	64.8	19.0	5.41	.45	.60	.74	62.4	18.3	6.00	.45	.61	.76	59.9	17.6	6.68	.46	.62	.78
	2200	1040	67.6	19.8	4.94	.46	.61	.76	65.4	19.2	5.44	.46	.62	.77	63.0	18.5	6.03	.46	.62	.79	60.5	17.7	6.71	.47	.63	.81
10ACC-060 — C33-62D COOLING CAPACITY																										
63°F (17°C)	1800	850	59.8	17.5	4.68	.77	.91	1.00	57.9	17.0	5.17	.78	.92	1.00	55.7	16.3	5.73	.79	.94	1.00	53.4	15.6	6.41	.80	.96	1.00
	2000	945	60.9	17.8	4.71	.79	.94	1.00	58.8	17.2	5.20	.80	.96	1.00	56.7	16.6	5.77	.82	.98	1.00	54.4	15.9	6.43	.83	.99	1.00
	2200	1040	61.8	18.1	4.74	.82	.97	1.00	59.7	17.5	5.24	.83	.99	1.00	57.5	16.9	5.81	.85	1.00	1.00	55.3	16.2	6.47	.86	1.00	1.00
67°F (19°C)	1800	850	63.4	18.6	4.80	.60	.74	.88	61.2	17.9	5.30	.60	.75	.89	58.9	17.3	5.86	.61	.76	.91	56.6	16.6	6.53	.62	.78	.93
	2000	945	64.2	18.8	4.83	.61	.77	.91	62.0	18.2	5.32	.62	.78	.93	59.7	17.5	5.89	.63	.79	.95	57.3	16.8	6.57	.64	.81	.97
	2200	1040	65.0	19.0	4.86	.63	.79	.95	62.8	18.4	5.35	.64	.81	.96	60.4	17.7	5.93	.65	.82	.98	57.9	17.0	6.60	.66	.84	1.00
71°F (22°C)	1800	850	67.2	19.7	4.94	.45	.58	.71	65.0	19.0	5.44	.45	.59	.73	62.6	18.3	6.02	.45	.60	.74	60.1	17.6	6.69	.45	.60	.76
	2000	945	68.1	20.0	4.97	.45	.60	.74	65.8	19.3	5.47	.46	.61	.75	63.4	18.6	6.05	.46	.61	.77	60.8	17.8	6.73	.46	.62	.79
	2200	1040	68.8	20.2	5.00	.46	.61	.77	66.5	19.5	5.50	.46	.62	.78	64.0	18.8	6.07	.46	.63	.80	61.4	18.0	6.76	.47	.64	.82

RATINGS

NOTE - For Temperatures and Capacities not shown in tables, see bulletin - Cooling Unit Rating Table Correction Factor Data in Miscellaneous Engineering Data section.

Entering Wet Bulb Temperature	Total Air Volume		Outdoor Air Temperature Entering Outdoor Coil																							
			85°F (29°C)						95°F (35°C)						105°F (41°C)						115°F (46°C)					
			Total Cooling Capacity		Comp Motor kW Input	Sensible To Total Ratio (S/T) Dry Bulb			Total Cooling Capacity		Comp Motor kW Input	Sensible To Total Ratio (S/T) Dry Bulb			Total Cooling Capacity		Comp Motor kW Input	Sensible To Total Ratio (S/T) Dry Bulb			Total Cooling Capacity		Comp Motor kW Input	Sensible To Total Ratio (S/T) Dry Bulb		
	cfm	L/s	kBtuh	kW		75°F 24°C	80°F 27°C	85°F 29°C	kBtuh	kW		75°F 24°C	80°F 27°C	85°F 29°C	kBtuh	kW		75°F 24°C	80°F 27°C	85°F 29°C	kBtuh	kW		75°F 24°C	80°F 27°C	85°F 29°C
10ACC-060 — C26-65EAP COOLING CAPACITY																										
63°F (17°C)	1800	850	59.8	17.5	4.68	.77	.91	1.00	57.8	16.9	5.16	.78	.93	1.00	55.6	16.3	5.73	.79	.95	1.00	53.4	15.6	6.39	.81	.96	1.00
	2000	945	60.8	17.8	4.71	.79	.95	1.00	58.8	17.2	5.20	.81	.96	1.00	56.6	16.6	5.77	.82	.98	1.00	54.3	15.9	6.44	.84	1.00	1.00
	2200	1040	61.7	18.1	4.75	.82	.98	1.00	59.6	17.5	5.24	.83	1.00	1.00	57.5	16.9	5.81	.85	1.00	1.00	55.3	16.2	6.47	.87	1.00	1.00
67°F (19°C)	1800	850	63.2	18.5	4.80	.60	.74	.88	61.1	17.9	5.29	.61	.75	.90	58.8	17.2	5.86	.61	.77	.91	56.4	16.5	6.53	.62	.78	.93
	2000	945	64.1	18.8	4.83	.62	.77	.92	62.0	18.2	5.32	.62	.78	.93	59.6	17.5	5.90	.63	.80	.95	57.2	16.8	6.57	.64	.81	.97
	2200	1040	64.9	19.0	4.86	.63	.80	.95	62.7	18.4	5.36	.64	.81	.97	60.3	17.7	5.93	.65	.83	.99	57.8	16.9	6.60	.66	.85	1.00
71°F (22°C)	1800	850	67.1	19.7	4.95	.45	.58	.72	64.9	19.0	5.44	.45	.59	.73	62.5	18.3	6.01	.45	.60	.74	60.0	17.6	6.70	.46	.61	.76
	2000	945	68.0	19.9	4.98	.45	.60	.75	65.7	19.3	5.47	.46	.61	.76	63.2	18.5	6.05	.46	.62	.77	60.6	17.8	6.73	.46	.63	.79
	2200	1040	68.7	20.1	5.00	.46	.62	.78	66.4	19.5	5.50	.46	.63	.79	63.8	18.7	6.08	.47	.64	.81	61.3	18.0	6.75	.47	.65	.82
10ACC-060 — C33-60D WITH G60UHV-60D-135 COOLING CAPACITY																										
63°F (17°C)	1440	680	54.7	16.0	4.60	.72	.84	.96	52.8	15.5	5.12	.73	.86	.97	50.8	14.9	5.69	.74	.87	.99	48.8	14.3	6.38	.75	.89	1.00
	1600	755	55.8	16.4	4.62	.74	.87	.99	53.8	15.8	5.13	.74	.88	1.00	51.8	15.2	5.71	.75	.90	1.00	49.8	14.6	6.39	.77	.92	1.00
	1760	830	56.7	16.6	4.63	.75	.90	1.00	54.7	16.0	5.14	.76	.91	1.00	52.7	15.4	5.71	.78	.93	1.00	50.6	14.8	6.39	.79	.94	1.00
67°F (19°C)	1440	680	58.4	17.1	4.66	.57	.69	.81	56.5	16.6	5.16	.58	.70	.82	54.4	15.9	5.74	.58	.71	.83	52.3	15.3	6.42	.59	.72	.85
	1600	755	59.4	17.4	4.69	.58	.71	.84	57.5	16.9	5.18	.59	.72	.85	55.3	16.2	5.76	.59	.73	.86	53.1	15.6	6.43	.60	.74	.88
	1760	830	60.2	17.6	4.72	.59	.73	.86	58.2	17.1	5.21	.60	.74	.88	56.1	16.4	5.78	.60	.75	.89	53.9	15.8	6.45	.61	.76	.91
71°F (22°C)	1440	680	62.1	18.2	4.78	.44	.55	.66	60.1	17.6	5.28	.44	.56	.67	58.0	17.0	5.86	.44	.56	.68	55.8	16.4	6.53	.44	.57	.69
	1600	755	63.1	18.5	4.82	.44	.56	.68	61.1	17.9	5.32	.44	.57	.69	58.9	17.3	5.89	.44	.57	.70	56.6	16.6	6.57	.45	.58	.72
	1760	830	63.9	18.7	4.85	.44	.57	.70	61.8	18.1	5.35	.45	.58	.71	59.6	17.5	5.92	.45	.59	.72	57.3	16.8	6.60	.45	.60	.74
10ACC-060 — C33-50/60C WITH G60UHV-60C-090 COOLING CAPACITY																										
63°F (17°C)	1785	845	56.4	16.5	4.45	.76	.90	1.00	54.4	15.9	4.94	.77	.92	1.00	52.4	15.4	5.50	.78	.93	1.00	50.4	14.8	6.15	.79	.95	1.00
	1960	925	57.3	16.8	4.46	.78	.93	1.00	55.3	16.2	4.95	.79	.94	1.00	53.2	15.6	5.50	.80	.96	1.00	51.2	15.0	6.16	.82	.98	1.00
	2180	1030	58.2	17.1	4.47	.80	.96	1.00	56.3	16.5	4.96	.82	.97	1.00	54.2	15.9	5.51	.83	.99	1.00	52.1	15.3	6.17	.85	1.00	1.00
67°F (19°C)	1785	845	59.9	17.6	4.51	.59	.73	.87	57.9	17.0	4.99	.60	.74	.88	55.8	16.4	5.54	.61	.75	.90	53.5	15.7	6.19	.61	.77	.92
	1960	925	60.6	17.8	4.54	.60	.75	.90	58.6	17.2	5.01	.61	.76	.91	56.4	16.5	5.56	.62	.78	.93	54.2	15.9	6.20	.63	.79	.95
	2180	1030	61.4	18.0	4.56	.62	.78	.93	59.3	17.4	5.04	.63	.79	.95	57.1	16.7	5.58	.64	.81	.96	54.8	16.1	6.23	.65	.82	.98
71°F (22°C)	1785	845	63.5	18.6	4.64	.45	.58	.71	61.5	18.0	5.11	.45	.58	.72	59.3	17.4	5.67	.45	.59	.73	57.0	16.7	6.32	.45	.60	.74
	1960	925	64.2	18.8	4.66	.45	.59	.73	62.2	18.2	5.14	.45	.60	.74	59.9	17.6	5.69	.45	.60	.75	57.6	16.9	6.34	.46	.61	.77
	2180	1030	65.0	19.0	4.69	.45	.61	.76	62.9	18.4	5.16	.46	.61	.77	60.6	17.8	5.72	.46	.62	.79	58.2	17.1	6.38	.46	.63	.80
10ACC-060 — C33-62D WITH G60UHV-60D-135 COOLING CAPACITY																										
63°F (17°C)	1625	765	58.9	17.3	4.72	.74	.88	1.00	56.9	16.7	5.23	.75	.89	1.00	54.8	16.1	5.82	.76	.91	1.00	52.5	15.4	6.50	.78	.93	1.00
	1805	850	60.0	17.6	4.76	.77	.91	1.00	58.0	17.0	5.26	.78	.92	1.00	55.8	16.4	5.83	.79	.94	1.00	53.5	15.7	6.52	.80	.96	1.00
	1985	935	60.9	17.8	4.79	.79	.94	1.00	58.9	17.3	5.29	.80	.95	1.00	56.7	16.6	5.86	.81	.97	1.00	54.4	15.9	6.54	.83	.99	1.00
67°F (19°C)	1625	765	62.5	18.3	4.85	.59	.72	.85	60.4	17.7	5.35	.59	.73	.86	58.2	17.1	5.93	.60	.74	.88	55.8	16.4	6.60	.60	.75	.89
	1805	850	63.5	18.6	4.88	.60	.74	.88	61.3	18.0	5.39	.60	.75	.89	59.0	17.3	5.96	.61	.76	.91	56.7	16.6	6.64	.62	.78	.93
	1985	935	64.2	18.8	4.91	.61	.77	.91	62.1	18.2	5.41	.62	.78	.93	59.7	17.5	5.99	.63	.79	.94	57.3	16.8	6.68	.64	.81	.96
71°F (22°C)	1625	765	66.4	19.5	4.99	.44	.57	.69	64.2	18.8	5.49	.44	.57	.70	61.9	18.1	6.09	.45	.58	.71	59.5	17.4	6.77	.45	.59	.73
	1805	850	67.3	19.7	5.02	.45	.58	.72	65.1	19.1	5.53	.45	.59	.73	62.7	18.4	6.12	.45	.60	.74	60.2	17.6	6.81	.45	.60	.76
	1985	935	68.1	20.0	5.06	.45	.60	.74	65.8	19.3	5.57	.45	.60	.75	63.4	18.6	6.15	.46	.61	.77	60.8	17.8	6.84	.46	.62	.78
10ACC-060 — C26-51/65 WITH G32V5-125 COOLING CAPACITY																										
63°F (17°C)	1400	660	53.5	15.7	4.52	.72	.84	.96	51.6	15.1	5.02	.73	.86	.98	49.7	14.6	5.59	.74	.87	.99	47.7	14.0	6.25	.75	.89	1.00
	1600	755	54.9	16.1	4.54	.74	.88	1.00	53.0	15.5	5.04	.75	.90	1.00	51.0	14.9	5.60	.77	.91	1.00	49.0	14.4	6.27	.78	.93	1.00
	1800	850	56.0	16.4	4.57	.77	.91	1.00	54.1	15.9	5.05	.78	.93	1.00	52.1	15.3	5.61	.79	.95	1.00	50.0	14.7	6.28	.81	.97	1.00
67°F (19°C)	1400	660	57.0	16.7	4.61	.57	.69	.81	55.1	16.1	5.09	.58	.70	.82	53.1	15.6	5.64	.58	.71	.84	51.0	14.9	6.30	.59	.72	.85
	1600	755	58.2	17.1	4.65	.59	.72	.85	56.2	16.5	5.13	.59	.73	.86	54.1	15.9	5.70	.60	.74	.88	52.0	15.2	6.34	.60	.75	.89
	1800	850	59.1	17.3	4.69	.60	.75	.88	57.2	16.8	5.17	.61	.76	.90	55.0	16.1	5.73	.61	.77	.92	52.8	15.5	6.38	.62	.78	.94
71°F (22°C)	1400	660	60.5	17.7	4.74	.44	.55	.67	58.6	17.2	5.22	.44	.56	.67	56.5	16.6	5.79	.44	.56	.68	54.3	15.9	6.45	.44	.57	.69
	1600	755	61.8	18.1	4.78	.44	.57	.69	59.7	17.5	5.27	.44	.57	.70	57.6	16.9	5.84	.45	.58	.71	55.3	16.2	6.50	.45	.59	.73
	1800	850	62.7	18.4	4.82	.45	.58	.72	60.7	17.8	5.31	.45	.59	.73	58.4	17.1	5.88	.45	.60	.75	56.1	16.4	6.53	.46	.61	.76
10ACC-060 — C23-51/65 WITH G32V5-125 COOLING CAPACITY																										
63°F (17°C)	1650	780	56.3	16.5	4.60	.74	.88	1.00	54.4	15.9	5.11	.75	.90	1.00	52.4	15.4	5.68	.76	.91	1.00	50.3	14.7	6.36	.78	.93	1.00
	1800	850	57.2	16.8	4.61	.76	.90	1.00	55.2	16.2	5.12	.77	.92	1.00	53.2	15.6	5.69	.79	.94	1.00	51.0	14.9	6.37	.80	.96	1.00
	1950	920	57.9	17.0	4.63	.78	.93	1.00	56.0	16.4	5.13	.79	.94	1.00	53.9	15.8	5.70	.81	.96	1.00	51.8	15.2	6.37	.82	.98	1.00
67°F (19°C)	1650	780	59.9	17.6	4.70	.59	.72	.85	57.9	17.0	5.19	.59	.73	.86	55.8	16.4	5.75	.60	.74	.88	53.5	15.7	6.42	.60	.75	.89
	1800	850	60.6	17.8	4.72	.60	.74	.87	58.6	17.2	5.21	.60	.75	.89	56.4	16.5	5.78	.61	.76	.91	54.2	15.9	6.44	.62	.77	.92
	1950	920	61.2	17.9	4.75	.61	.76	.90	59.2	17.3	5.24	.61	.77	.92	57.0	16.7	5.81	.62	.78	.93	54.7	16.0	6.47	.63	.80	.95
71°F (22°C)	1650	780	63.6	18.6	4.83	.44	.57	.69	61.5	18.0	5.32	.44	.57	.70	59.3	17.4	5.90	.45	.58	.71	56.9	16.7	6.58	.45	.59	.73
	1800	850	64.3	18.8	4.86	.45	.58	.71	62.2	18.2	5.35	.45	.59	.72	59.9	17.6	5.93	.45	.59	.74	57.5	16.9	6.60	.45	.60	.75
	1950	920	64.9	19.0	4.88	.45	.59	.73	62.8	18.4	5.37	.45	.60	.74	60.5	17.7	5.96	.45	.61	.76	58.1	17.0	6.63	.46	.62	.77
10ACC-060 — C26-65EAP WITH G32V5-125 COOLING CAPACITY																										
63°F (17°C)	1800	850	59.5	17.4	4.77	.77	.91	1.00	57.5	16.9	5.26	.78	.93	1.00	55.3	16.2	5.83	.79	.95	1.00	53.1	15.6	6.51	.81	.96	1.00
	1900	895	60.0	17.6	4.78	.78	.93	1.00	58.0	17.0	5.28	.79	.95	1.00	55.8	16.4	5.86	.81	.96	1.00	53.6	15.7	6.53	.82	.98	1.00
	1950	920	60.3	17.7	4.79	.79	.94	1.00	58.2	17.1	5.29	.80	.96	1.00	56.0	16.4	5.87	.81	.97	1.00	53.8	15.8	6.54	.83	.99	1.00
67°F (19°C)	1800	850	62.9	18.4	4.89	.60	.74	.88	60.8	17.8	5.39	.61	.75	.90	58.5	17.1	5.97	.61	.77	.91	56.1	16.4	6.65	.62	.78	.93
	1900	895	63.3	18.6	4.91	.61	.76	.90	61.2	17.9	5.41	.61	.77	.91	58.9	17.3	5.99	.62	.78	.93	56.5	16.6	6.67	.63	.80	.95
	1950	920	63.6	18.6	4.92	.61	.76	.91	61.4	18.0	5.42	.62	.78	.93	59.1	17.3	6.00	.63	.79	.94	56.7	16.6	6.68	.64	.81	.96
71°F (22°C)	1800	850	66.7	19.5	5.04	.45	.58	.72	64.5	18.9	5.54	.45	.59	.73	62.1	18.2	6.13	.45	.60	.74	59.6	17.5	6.82	.46	.61	.76
	1900	895	67.2	19.7	5.06	.45	.59	.73	65.0	19.0	5.56	.45	.60	.74	62.5	18.3	6.14	.46	.61	.76	60.0	17.6	6.84	.46	.62	.78
	1950	920	67.4	19.8	5.07	.45	.60	.74	65.2	19.1	5.56	.45	.60	.75	62.7	18.4	6.15	.46	.61	.77	60.2	17.6	6.85	.46	.62	.78

RATINGS

NOTE - For Temperatures and Capacities not shown in tables, see bulletin - Cooling Unit Rating Table Correction Factor Data in Miscellaneous Engineering Data section.

Entering Wet Bulb Temperature	Total Air Volume		Outdoor Air Temperature Entering Outdoor Coil																							
			85°F (29°C)						95°F (35°C)						105°F (41°C)						115°F (46°C)					
			Total Cooling Capacity		Comp Motor kW Input	Sensible To Total Ratio (S/T) Dry Bulb			Total Cooling Capacity		Comp Motor kW Input	Sensible To Total Ratio (S/T) Dry Bulb			Total Cooling Capacity		Comp Motor kW Input	Sensible To Total Ratio (S/T) Dry Bulb			Total Cooling Capacity		Comp Motor kW Input	Sensible To Total Ratio (S/T) Dry Bulb		
	cfm	L/s	kBtuh	kW		75°F 24°C	80°F 27°C	85°F 29°C	kBtuh	kW		75°F 24°C	80°F 27°C	85°F 29°C	kBtuh	kW		75°F 24°C	80°F 27°C	85°F 29°C	kBtuh	kW		75°F 24°C	80°F 27°C	85°F 29°C
10ACC-060 — CR26-48N-F COOLING CAPACITY																										
63°F (17°C)	1200	565	51.3	15.0	4.53	.69	.81	.91	49.6	14.5	5.05	.70	.81	.93	47.8	14.0	5.62	.71	.83	.94	46.0	13.5	6.30	.71	.84	.96
	1400	660	52.9	15.5	4.55	.71	.84	.95	51.1	15.0	5.06	.72	.85	.97	49.2	14.4	5.64	.73	.86	.98	47.3	13.9	6.31	.74	.88	1.00
	1600	755	54.2	15.9	4.57	.73	.87	.99	52.3	15.3	5.07	.74	.88	1.00	50.4	14.8	5.65	.76	.90	1.00	48.5	14.2	6.33	.77	.91	1.00
67°F (19°C)	1200	565	54.9	16.1	4.57	.56	.66	.77	53.1	15.6	5.08	.56	.67	.78	51.2	15.0	5.67	.57	.68	.79	49.3	14.4	6.34	.57	.69	.80
	1400	660	56.6	16.6	4.59	.57	.68	.80	54.7	16.0	5.10	.57	.69	.81	52.7	15.4	5.68	.58	.70	.83	50.7	14.9	6.36	.58	.71	.84
	1600	755	57.9	17.0	4.61	.58	.71	.83	55.9	16.4	5.11	.59	.72	.85	53.8	15.8	5.70	.59	.73	.86	51.7	15.2	6.37	.60	.74	.88
71°F (22°C)	1200	565	58.7	17.2	4.63	.44	.54	.63	56.9	16.7	5.12	.44	.54	.64	54.9	16.1	5.71	.44	.54	.65	52.8	15.5	6.38	.44	.55	.66
	1400	660	60.2	17.6	4.68	.44	.55	.66	58.4	17.1	5.17	.44	.55	.66	56.3	16.5	5.74	.44	.56	.67	54.2	15.9	6.41	.44	.56	.69
	1600	755	61.4	18.0	4.72	.44	.56	.68	59.5	17.4	5.22	.44	.57	.69	57.3	16.8	5.78	.44	.57	.70	55.2	16.2	6.45	.45	.58	.71
10ACC-060 — CR26-60N-F COOLING CAPACITY																										
63°F (17°C)	1200	565	52.3	15.3	4.56	.69	.81	.92	50.5	14.8	5.06	.70	.82	.93	48.6	14.2	5.64	.71	.83	.95	46.8	13.7	6.31	.72	.84	.96
	1400	660	54.0	15.8	4.58	.72	.84	.96	52.1	15.3	5.08	.73	.86	.97	50.2	14.7	5.65	.74	.87	.99	48.2	14.1	6.33	.75	.89	1.00
	1600	755	55.4	16.2	4.59	.74	.88	1.00	53.5	15.7	5.10	.75	.89	1.00	51.5	15.1	5.67	.76	.91	1.00	49.4	14.5	6.34	.78	.92	1.00
67°F (19°C)	1200	565	56.0	16.4	4.60	.56	.67	.77	54.1	15.9	5.10	.56	.67	.78	52.1	15.3	5.69	.57	.68	.80	50.1	14.7	6.36	.57	.69	.81
	1400	660	57.6	16.9	4.65	.57	.69	.81	55.7	16.3	5.14	.58	.70	.82	53.7	15.7	5.71	.58	.71	.83	51.5	15.1	6.38	.59	.72	.85
	1600	755	58.8	17.2	4.70	.59	.72	.84	56.9	16.7	5.18	.59	.72	.86	54.8	16.1	5.75	.59	.74	.87	52.6	15.4	6.41	.60	.75	.89
71°F (22°C)	1200	565	59.6	17.5	4.73	.44	.54	.64	57.7	16.9	5.22	.44	.54	.64	55.7	16.3	5.79	.44	.55	.65	53.6	15.7	6.46	.44	.55	.66
	1400	660	61.2	17.9	4.79	.44	.55	.66	59.2	17.3	5.28	.44	.56	.67	57.1	16.7	5.85	.44	.56	.68	54.9	16.1	6.52	.44	.57	.69
	1600	755	62.4	18.3	4.83	.44	.57	.69	60.4	17.7	5.32	.44	.57	.70	58.2	17.1	5.90	.45	.58	.71	55.9	16.4	6.57	.45	.59	.72
10ACC-060 — CR26-48W-F COOLING CAPACITY																										
63°F (17°C)	1400	660	53.5	15.7	4.58	.71	.84	.95	51.7	15.2	5.09	.72	.85	.97	49.8	14.6	5.67	.73	.86	.98	47.9	14.0	6.35	.74	.88	1.00
	1600	755	54.8	16.1	4.59	.74	.87	.99	52.9	15.5	5.10	.74	.88	1.00	51.0	14.9	5.68	.75	.90	1.00	49.0	14.4	6.36	.77	.91	1.00
	1800	850	55.9	16.4	4.60	.76	.90	1.00	54.0	15.8	5.12	.77	.91	1.00	52.0	15.2	5.69	.78	.93	1.00	50.0	14.7	6.37	.79	.95	1.00
67°F (19°C)	1400	660	57.2	16.8	4.62	.57	.68	.80	55.3	16.2	5.13	.57	.69	.81	53.3	15.6	5.72	.58	.70	.83	51.2	15.0	6.40	.58	.71	.84
	1600	755	58.5	17.1	4.63	.58	.71	.83	56.5	16.6	5.14	.59	.72	.85	54.4	15.9	5.73	.59	.73	.86	52.3	15.3	6.41	.60	.74	.88
	1800	850	59.5	17.4	4.66	.59	.73	.86	57.5	16.9	5.15	.60	.74	.88	55.3	16.2	5.74	.61	.75	.90	53.1	15.6	6.42	.61	.77	.91
71°F (22°C)	1400	660	60.9	17.8	4.71	.44	.55	.66	59.0	17.3	5.20	.44	.55	.67	56.9	16.7	5.78	.44	.56	.67	54.8	16.1	6.44	.44	.56	.69
	1600	755	62.1	18.2	4.75	.44	.56	.68	60.1	17.6	5.25	.44	.57	.69	58.0	17.0	5.82	.44	.57	.70	55.8	16.4	6.49	.45	.58	.71
	1800	850	63.1	18.5	4.79	.44	.57	.70	61.0	17.9	5.28	.45	.58	.72	58.8	17.2	5.85	.45	.59	.73	56.6	16.6	6.52	.45	.60	.74
10ACC-060 — CR26-60W-F COOLING CAPACITY																										
63°F (17°C)	1600	755	56.8	16.6	4.61	.74	.88	1.00	54.8	16.1	5.12	.75	.89	1.00	52.8	15.5	5.69	.76	.91	1.00	50.6	14.8	6.37	.77	.92	1.00
	1800	850	57.9	17.0	4.63	.76	.91	1.00	56.0	16.4	5.13	.78	.92	1.00	53.9	15.8	5.70	.79	.94	1.00	51.7	15.2	6.38	.80	.96	1.00
	2000	945	58.9	17.3	4.67	.79	.94	1.00	56.9	16.7	5.15	.80	.96	1.00	54.8	16.1	5.72	.82	.97	1.00	52.7	15.4	6.39	.83	.99	1.00
67°F (19°C)	1600	755	60.3	17.7	4.71	.58	.71	.84	58.3	17.1	5.20	.59	.72	.86	56.1	16.4	5.77	.60	.73	.87	53.9	15.8	6.44	.60	.75	.89
	1800	850	61.3	18.0	4.75	.60	.74	.88	59.2	17.3	5.24	.60	.75	.89	57.0	16.7	5.81	.61	.76	.91	54.7	16.0	6.47	.62	.78	.93
	2000	945	62.1	18.2	4.78	.61	.77	.91	60.0	17.6	5.27	.62	.78	.93	57.8	16.9	5.84	.63	.79	.94	55.5	16.3	6.50	.64	.81	.97
71°F (22°C)	1600	755	64.0	18.8	4.85	.44	.57	.69	61.9	18.1	5.34	.44	.57	.70	59.7	17.5	5.92	.45	.58	.71	57.3	16.8	6.60	.45	.59	.72
	1800	850	65.0	19.0	4.89	.45	.58	.72	62.9	18.4	5.38	.45	.59	.73	60.5	17.7	5.96	.45	.60	.74	58.2	17.1	6.64	.45	.60	.75
	2000	945	65.8	19.3	4.92	.45	.60	.74	63.6	18.6	5.42	.45	.61	.76	61.3	18.0	5.99	.46	.61	.77	58.8	17.2	6.66	.46	.62	.79
10ACC-060 — CR26-48N-F WITH GHR32V5-100 COOLING CAPACITY																										
63°F (17°C)	1260	595	51.8	15.2	4.59	.70	.81	.93	50.0	14.7	5.10	.71	.83	.94	48.2	14.1	5.69	.71	.84	.96	46.4	13.6	6.37	.72	.85	.97
	1465	690	53.3	15.6	4.60	.72	.85	.96	51.5	15.1	5.12	.73	.86	.98	49.6	14.5	5.70	.74	.88	.99	47.7	14.0	6.38	.75	.89	1.00
	1655	780	54.5	16.0	4.62	.74	.88	1.00	52.6	15.4	5.13	.75	.89	1.00	50.7	14.9	5.71	.76	.91	1.00	48.7	14.3	6.39	.77	.92	1.00
67°F (19°C)	1260	595	55.5	16.3	4.63	.56	.67	.78	53.6	15.7	5.14	.57	.68	.79	51.7	15.2	5.73	.57	.68	.80	49.8	14.6	6.41	.57	.69	.81
	1465	690	57.0	16.7	4.64	.57	.69	.81	55.1	16.1	5.15	.58	.70	.82	53.1	15.6	5.75	.58	.71	.84	51.0	14.9	6.43	.59	.72	.85
	1655	780	58.1	17.0	4.66	.58	.71	.84	56.2	16.5	5.17	.59	.72	.86	54.1	15.9	5.76	.59	.73	.87	52.0	15.2	6.44	.60	.75	.89
71°F (22°C)	1260	595	59.2	17.3	4.70	.44	.54	.64	57.4	16.8	5.19	.44	.54	.65	55.4	16.2	5.77	.44	.55	.66	53.3	15.6	6.45	.44	.55	.67
	1465	690	60.7	17.8	4.74	.44	.55	.66	58.7	17.2	5.24	.44	.56	.67	56.7	16.6	5.82	.44	.56	.68	54.5	16.0	6.49	.44	.57	.69
	1655	780	61.7	18.1	4.78	.44	.56	.69	59.7	17.5	5.28	.44	.57	.70	57.6	16.9	5.85	.45	.58	.71	55.4	16.2	6.53	.45	.58	.72
10ACC-060 — CR26-48W-F WITH GHR32V5-100 COOLING CAPACITY																										
63°F (17°C)	1465	690	53.5	15.7	4.53	.72	.85	.96	51.7	15.2	5.04	.73	.86	.98	49.8	14.6	5.61	.74	.87	.99	47.9	14.0	6.28	.75	.89	1.00
	1655	780	54.7	16.0	4.54	.74	.88	1.00	52.8	15.5	5.05	.75	.89	1.00	50.9	14.9	5.62	.76	.91	1.00	48.9	14.3	6.29	.77	.92	1.00
	1920	905	56.0	16.4	4.56	.77	.92	1.00	54.1	15.9	5.06	.78	.93	1.00	52.1	15.3	5.63	.79	.95	1.00	50.1	14.7	6.31	.81	.97	1.00
67°F (19°C)	1465	690	57.2	16.8	4.57	.57	.69	.81	55.3	16.2	5.08	.58	.70	.82	53.3	15.6	5.66	.58	.71	.84	51.2	15.0	6.33	.59	.72	.85
	1655	780	58.4	17.1	4.59	.58	.71	.84	56.4	16.5	5.09	.59	.72	.86	54.3	15.9	5.67	.59	.73	.87	52.2	15.3	6.34	.60	.75	.89
	1920	905	59.5	17.4	4.62	.60	.74	.88	57.5	16.9	5.11	.61	.75	.90	55.4	16.2	5.68	.61	.77	.92	53.2	15.6	6.35	.62	.78	.93
71°F (22°C)	1465	690	60.9	17.8	4.67	.44	.55	.66	59.0	17.3	5.16	.44	.56	.67	56.9	16.7	5.73	.44	.56	.68	54.7	16.0	6.39	.44	.57	.69
	1655	780	61.9	18.1	4.71	.44	.57	.69	59.9	17.6	5.20	.44	.57	.70	57.8	16.9	5.76	.44	.58	.71	55.6	16.3	6.43	.45	.58	.72
	1920	905	63.1	18.5	4.75	.45	.58	.72	61.0	17.9	5.24	.45	.59	.73	58.8	17.2	5.80	.45	.60	.74	56.5	16.6	6.47	.46	.61	.76
10ACC-060 — CR26-60N-F WITH GHR32V5-125 COOLING CAPACITY																										
63°F (17°C)	1465	690	55.2	16.2	4.57	.73	.85	.97	53.3	15.6	5.08	.73	.87	.99	51.3	15.0	5.65	.74	.88	1.00	49.3	14.4	6.32	.75	.90	1.00
	1655	780	56.4	16.5	4.59	.75	.89	1.00	54.5	16.0	5.09	.76	.90	1.00	52.4	15.4	5.66	.77	.92	1.00	50.3	14.7	6.34	.78	.93	1.00
	1920	905	57.8	16.9	4.63	.78	.93	1.00	55.9	16.4	5.12	.79	.94	1.00	53.8	15.8	5.68	.81	.96	1.00	51.7	15.2	6.35	.82	.98	1.00
67°F (19°C)	1465	690	58.8	17.2	4.66	.58	.70	.82	56.9	16.7	5.15	.58	.71	.83	54.8	16.1	5.71	.58	.72	.85	52.6	15.4	6.37	.59	.73	.86
	1655	780	59.9	17.6	4.70	.59	.72	.85	57.9	17.0	5.19	.59	.73	.87	55.7	16.3	5.76	.60	.74	.88	53.5	15.7	6.41	.61	.76	.90
	1920	905	61.1	17.9	4.74	.61	.75	.90	59.0	17.3	5.24	.61	.77	.91	56.8	16.6	5.80	.62	.78	.93	54.5	16.0	6.46	.63	.80	.95
71°F (22°C)	1465	690	62.5	18.3	4.79	.44	.56	.67	60.4	17.7	5.29	.44	.56	.68	58.3	17.1	5.86	.44	.57	.69	56.0	16.4	6.53	.44	.57	.70
	1655	780	63.6	18.6	4.83	.44	.57	.70	61.5	18.0	5.33	.44	.58	.71	59.2	17.3	5.90	.45	.58	.72	56.9	16.7	6.57	.45	.59	.73
	1920	905	64.7	19.0	4.88	.45	.59	.73	62.6	18.3	5.37	.45	.60	.74	60.3	17.7	5.95	.46	.61	.76	57.9	17.0	6.62	.46	.62	.77

RATINGS

NOTE - For Temperatures and Capacities not shown in tables, see bulletin - Cooling Unit Rating Table Correction Factor Data in Miscellaneous Engineering Data section.

Entering Wet Bulb Temperature	Total Air Volume		Outdoor Air Temperature Entering Outdoor Coil																							
			85°F (29°C)						95°F (35°C)						105°F (41°C)						115°F (46°C)					
			Total Cooling Capacity		Comp Motor kW Input	Sensible To Total Ratio (S/T) Dry Bulb			Total Cooling Capacity		Comp Motor kW Input	Sensible To Total Ratio (S/T) Dry Bulb			Total Cooling Capacity		Comp Motor kW Input	Sensible To Total Ratio (S/T) Dry Bulb			Total Cooling Capacity		Comp Motor kW Input	Sensible To Total Ratio (S/T) Dry Bulb		
	cfm	L/s	kBtuh	kW		75°F 24°C	80°F 27°C	85°F 29°C	kBtuh	kW		75°F 24°C	80°F 27°C	85°F 29°C	kBtuh	kW		75°F 24°C	80°F 27°C	85°F 29°C	kBtuh	kW		75°F 24°C	80°F 27°C	85°F 29°C
10ACC-060 — CR26-60W -F WITH GHR32V5-125 COOLING CAPACITY																										
63°F (17°C)	1465	690	55.5	16.3	4.61	.73	.85	.97	53.6	15.7	5.12	.73	.87	.99	51.6	15.1	5.69	.75	.88	1.00	49.5	14.5	6.37	.76	.90	1.00
	1720	810	57.1	16.7	4.63	.76	.90	1.00	55.1	16.1	5.14	.77	.91	1.00	53.1	15.6	5.71	.78	.93	1.00	51.0	14.9	6.39	.79	.95	1.00
	1920	905	58.1	17.0	4.66	.78	.93	1.00	56.2	16.5	5.15	.79	.95	1.00	54.1	15.9	5.72	.81	.96	1.00	51.9	15.2	6.40	.82	.98	1.00
67°F (19°C)	1465	690	59.1	17.3	4.70	.58	.70	.82	57.1	16.7	5.19	.58	.71	.83	55.0	16.1	5.75	.59	.72	.85	52.9	15.5	6.42	.59	.73	.86
	1720	810	60.5	17.7	4.75	.59	.73	.86	58.5	17.1	5.24	.60	.74	.88	56.3	16.5	5.81	.60	.75	.90	54.1	15.9	6.47	.61	.77	.91
	1920	905	61.4	18.0	4.78	.61	.75	.90	59.3	17.4	5.28	.61	.77	.91	57.1	16.7	5.84	.62	.78	.93	54.8	16.1	6.51	.63	.80	.95
71°F (22°C)	1465	690	62.8	18.4	4.83	.44	.56	.67	60.8	17.8	5.33	.44	.56	.68	58.6	17.2	5.90	.44	.57	.69	56.3	16.5	6.58	.44	.57	.70
	1720	810	64.2	18.8	4.88	.45	.58	.70	62.1	18.2	5.38	.45	.58	.72	59.8	17.5	5.96	.45	.59	.73	57.5	16.9	6.64	.45	.60	.74
	1920	905	65.1	19.1	4.92	.45	.59	.73	62.9	18.4	5.41	.45	.60	.74	60.6	17.8	5.99	.45	.61	.76	58.2	17.1	6.67	.46	.62	.77
10ACC-060 — CH23-65 COOLING CAPACITY																										
63°F (17°C)	1600	755	55.6	16.3	4.62	.74	.88	1.00	53.7	15.7	5.14	.75	.89	1.00	51.7	15.2	5.72	.76	.91	1.00	49.7	14.6	6.40	.77	.92	1.00
	1800	850	56.7	16.6	4.64	.76	.91	1.00	54.8	16.1	5.15	.78	.92	1.00	52.8	15.5	5.73	.79	.94	1.00	50.7	14.9	6.41	.80	.96	1.00
	2000	945	57.7	16.9	4.65	.79	.94	1.00	55.8	16.4	5.16	.80	.96	1.00	53.7	15.7	5.74	.82	.97	1.00	51.7	15.2	6.42	.83	.99	1.00
67°F (19°C)	1600	755	59.3	17.4	4.67	.59	.71	.84	57.3	16.8	5.18	.59	.72	.86	55.1	16.1	5.77	.59	.73	.87	52.9	15.5	6.45	.60	.75	.89
	1800	850	60.2	17.6	4.70	.60	.74	.88	58.2	17.1	5.20	.60	.75	.89	56.0	16.4	5.78	.61	.76	.91	53.8	15.8	6.46	.62	.78	.93
	2000	945	61.0	17.9	4.73	.61	.76	.91	58.9	17.3	5.23	.62	.78	.92	56.8	16.6	5.80	.63	.79	.94	54.5	16.0	6.46	.64	.81	.96
71°F (22°C)	1600	755	62.9	18.4	4.80	.44	.57	.69	60.8	17.8	5.30	.44	.57	.70	58.7	17.2	5.87	.44	.58	.71	56.4	16.5	6.55	.45	.58	.72
	1800	850	63.8	18.7	4.83	.45	.58	.71	61.7	18.1	5.33	.45	.59	.73	59.5	17.4	5.91	.45	.59	.74	57.2	16.8	6.58	.45	.60	.75
	2000	945	64.6	18.9	4.86	.45	.60	.74	62.5	18.3	5.36	.45	.60	.75	60.2	17.6	5.94	.46	.61	.77	57.9	17.0	6.61	.46	.62	.78
10ACC-060 — CH33-50/60C-2F COOLING CAPACITY																										
63°F (17°C)	1200	565	54.0	15.8	4.59	.69	.80	.91	52.1	15.3	5.11	.70	.81	.92	50.2	14.7	5.68	.71	.83	.94	48.3	14.2	6.37	.71	.84	.96
	1400	660	55.8	16.4	4.61	.71	.84	.95	53.8	15.8	5.12	.72	.85	.97	51.8	15.2	5.70	.73	.86	.98	49.8	14.6	6.38	.74	.88	1.00
	1600	755	57.2	16.8	4.63	.74	.87	.99	55.2	16.2	5.14	.74	.88	1.00	53.2	15.6	5.71	.76	.90	1.00	51.0	14.9	6.39	.77	.91	1.00
67°F (19°C)	1200	565	57.8	16.9	4.64	.56	.66	.76	55.9	16.4	5.14	.56	.67	.78	53.9	15.8	5.73	.57	.68	.79	51.8	15.2	6.41	.57	.68	.80
	1400	660	59.6	17.5	4.68	.57	.68	.80	57.7	16.9	5.17	.57	.69	.81	55.5	16.3	5.75	.58	.70	.83	53.3	15.6	6.43	.58	.71	.84
	1600	755	60.9	17.8	4.73	.58	.71	.83	58.9	17.3	5.22	.59	.72	.85	56.7	16.6	5.79	.59	.73	.86	54.5	16.0	6.46	.60	.74	.88
71°F (22°C)	1200	565	61.7	18.1	4.76	.44	.54	.63	59.7	17.5	5.26	.44	.54	.64	57.6	16.9	5.83	.44	.54	.65	55.5	16.3	6.50	.44	.55	.66
	1400	660	63.4	18.6	4.82	.44	.55	.66	61.4	18.0	5.31	.44	.55	.66	59.2	17.3	5.89	.44	.56	.67	56.9	16.7	6.56	.44	.56	.69
	1600	755	64.7	19.0	4.86	.44	.56	.68	62.6	18.3	5.36	.44	.57	.69	60.3	17.7	5.94	.44	.57	.70	57.9	17.0	6.62	.45	.58	.71
10ACC-060 — CH33-60D-2F COOLING CAPACITY																										
63°F (17°C)	1600	755	57.5	16.9	4.66	.74	.87	.99	55.5	16.3	5.18	.75	.88	1.00	53.4	15.6	5.76	.76	.90	1.00	51.3	15.0	6.45	.77	.92	1.00
	1800	850	58.7	17.2	4.67	.76	.90	1.00	56.7	16.6	5.19	.77	.92	1.00	54.5	16.0	5.77	.78	.93	1.00	52.4	15.4	6.46	.80	.95	1.00
	2000	945	59.7	17.5	4.69	.78	.93	1.00	57.7	16.9	5.20	.79	.95	1.00	55.5	16.3	5.78	.81	.96	1.00	53.3	15.6	6.47	.82	.98	1.00
67°F (19°C)	1600	755	61.3	18.0	4.73	.58	.71	.84	59.2	17.3	5.23	.59	.72	.85	57.0	16.7	5.81	.59	.73	.86	54.8	16.1	6.49	.60	.74	.88
	1800	850	62.3	18.3	4.77	.59	.73	.87	60.2	17.6	5.27	.60	.74	.88	58.0	17.0	5.84	.61	.76	.90	55.7	16.3	6.52	.61	.77	.92
	2000	945	63.1	18.5	4.80	.61	.76	.90	61.0	17.9	5.30	.61	.77	.92	58.7	17.2	5.88	.62	.78	.94	56.4	16.5	6.55	.63	.80	.95
71°F (22°C)	1600	755	65.0	19.0	4.87	.44	.56	.68	62.9	18.4	5.37	.44	.57	.69	60.7	17.8	5.95	.44	.57	.70	58.3	17.1	6.63	.45	.58	.72
	1800	850	66.1	19.4	4.90	.45	.58	.71	63.9	18.7	5.40	.45	.58	.72	61.6	18.1	5.99	.45	.59	.73	59.2	17.3	6.67	.45	.60	.75
	2000	945	66.9	19.6	4.93	.45	.59	.73	64.7	19.0	5.43	.45	.60	.75	62.3	18.3	6.02	.46	.61	.76	59.9	17.6	6.71	.46	.62	.78
10ACC-060 — CH33-62D-2F COOLING CAPACITY																										
63°F (17°C)	1600	755	58.0	17.0	4.62	.74	.87	.99	56.0	16.4	5.13	.74	.88	1.00	53.9	15.8	5.70	.75	.90	1.00	51.7	15.2	6.38	.77	.91	1.00
	1800	850	59.2	17.3	4.65	.76	.90	1.00	57.2	16.8	5.14	.77	.91	1.00	55.0	16.1	5.71	.78	.93	1.00	52.8	15.5	6.39	.80	.95	1.00
	2000	945	60.2	17.6	4.69	.78	.93	1.00	58.1	17.0	5.18	.79	.95	1.00	56.0	16.4	5.74	.81	.97	1.00	53.8	15.8	6.40	.82	.98	1.00
67°F (19°C)	1600	755	61.7	18.1	4.74	.58	.71	.83	59.6	17.5	5.23	.59	.72	.85	57.4	16.8	5.80	.59	.73	.86	55.1	16.1	6.47	.60	.74	.88
	1800	850	62.8	18.4	4.78	.59	.73	.87	60.7	17.8	5.28	.60	.74	.88	58.4	17.1	5.84	.61	.75	.90	56.1	16.4	6.50	.61	.77	.92
	2000	945	63.7	18.7	4.81	.61	.76	.90	61.5	18.0	5.31	.61	.77	.92	59.2	17.3	5.87	.62	.78	.93	56.8	16.6	6.54	.63	.80	.95
71°F (22°C)	1600	755	65.6	19.2	4.88	.44	.56	.68	63.4	18.6	5.38	.44	.57	.69	61.1	17.9	5.95	.44	.57	.70	58.7	17.2	6.63	.45	.58	.71
	1800	850	66.7	19.5	4.92	.44	.58	.71	64.4	18.9	5.42	.45	.58	.72	62.1	18.2	6.00	.45	.59	.73	59.6	17.5	6.67	.45	.60	.74
	2000	945	67.5	19.8	4.95	.45	.59	.73	65.3	19.1	5.45	.45	.60	.74	62.8	18.4	6.03	.45	.61	.76	60.3	17.7	6.70	.46	.62	.77
10ACC-060 — CH23-68 COOLING CAPACITY																										
63°F (17°C)	1600	755	58.8	17.2	4.65	.74	.88	1.00	56.8	16.6	5.14	.75	.89	1.00	54.6	16.0	5.70	.76	.91	1.00	52.5	15.4	6.35	.78	.93	1.00
	1800	850	60.0	17.6	4.69	.77	.92	1.00	57.9	17.0	5.18	.78	.93	1.00	55.7	16.3	5.75	.79	.95	1.00	53.5	15.7	6.40	.81	.97	1.00
	2000	945	61.0	17.9	4.73	.80	.95	1.00	59.0	17.3	5.22	.81	.97	1.00	56.7	16.6	5.79	.83	.99	1.00	54.5	16.0	6.45	.84	1.00	1.00
67°F (19°C)	1600	755	62.3	18.3	4.78	.59	.72	.85	60.2	17.6	5.27	.59	.73	.86	57.9	17.0	5.83	.60	.74	.87	55.6	16.3	6.50	.60	.75	.89
	1800	850	63.4	18.6	4.82	.60	.75	.88	61.2	17.9	5.30	.61	.76	.90	58.9	17.3	5.88	.61	.77	.92	56.5	16.6	6.54	.63	.78	.94
	2000	945	64.3	18.8	4.85	.62	.77	.92	62.1	18.2	5.34	.62	.79	.94	59.7	17.5	5.91	.63	.80	.96	57.2	16.8	6.58	.64	.82	.98
71°F (22°C)	1600	755	66.2	19.4	4.92	.44	.57	.69	64.0	18.8	5.42	.44	.57	.70	61.6	18.1	5.99	.45	.58	.71	59.2	17.3	6.66	.45	.59	.73
	1800	850	67.3	19.7	4.96	.45	.58	.72	65.0	19.0	5.45	.45	.59	.73	62.5	18.3	6.03	.45	.60	.75	60.0	17.6	6.71	.46	.61	.76
	2000	945	68.1	20.0	4.99	.45	.60	.75	65.8	19.3	5.49	.46	.61	.76	63.3	18.6	6.07	.46	.62	.78	60.7	17.8	6.74	.46	.63	.80
10ACC-060 — CH33-50/60C-2F WITH G60UHV-60C-090 COOLING CAPACITY																										
63°F (17°C)	1335	630	54.6	16.0	4.60	.71	.83	.94	52.8	15.5	5.11	.71	.84	.95	50.8	14.9	5.69	.72	.85	.97	48.8	14.3	6.37	.73	.87	.99
	1440	680	55.5	16.3	4.61	.72	.84	.96	53.6	15.7	5.12	.72	.85	.97	51.6	15.1	5.70	.74	.87	.99	49.5	14.5	6.38	.75	.89	1.00
	1600	755	56.6	16.6	4.62	.74	.87	.99	54.7	16.0	5.13	.74	.88	1.00	52.6	15.4	5.71	.76	.90	1.00	50.5	14.8	6.39	.77	.92	1.00
67°F (19°C)	1335	630	58.5	17.1	4.66	.57	.68	.79	56.6	16.6	5.15	.57	.68	.80	54.4	15.9	5.74	.57	.69	.81	52.3	15.3	6.42	.58	.70	.83
	1440	680	59.3	17.4	4.69	.57	.69	.81	57.3	16.8	5.18	.58	.70	.82	55.2	16.2	5.75	.58	.71	.83	53.0	15.5	6.43	.59	.72	.85
	1600	755	60.3	17.7	4.72	.58	.71	.83	58.3	17.1	5.22	.59	.72	.85	56.1	16.4	5.78	.59	.73	.86	53.9	15.8	6.45	.60	.74	.88
71°F (22°C)	1335	630	62.2	18.2	4.80	.44	.54	.65	60.2	17.6	5.29	.44	.55	.66	58.1	17.0	5.87	.44	.55	.66	55.9	16.4	6.54	.44	.56	.68
	1440	680	63.0	18.5	4.82	.44	.55	.66	61.0	17.9	5.32	.44	.56	.67	58.8	17.2	5.90	.44	.56	.68	56.5	16.6	6.57	.44	.57	.69
	1600	755	64.0	18.8	4.86	.44	.56	.68	62.0	18.2	5.36	.44	.57	.69	59.7	17.5	5.93	.44	.57	.70	57.3	16.8	6.62	.45	.58	.72

RATINGS

NOTE - For Temperatures and Capacities not shown in tables, see bulletin - Cooling Unit Rating Table Correction Factor Data in Miscellaneous Engineering Data section.

Entering Wet Bulb Temperature	Total Air Volume		Outdoor Air Temperature Entering Outdoor Coil																							
			85°F (29°C)						95°F (35°C)						105°F (41°C)						115°F (46°C)					
			Total Cooling Capacity		Comp Motor kW Input	Sensible To Total Ratio (S/T) Dry Bulb			Total Cooling Capacity		Comp Motor kW Input	Sensible To Total Ratio (S/T) Dry Bulb			Total Cooling Capacity		Comp Motor kW Input	Sensible To Total Ratio (S/T) Dry Bulb			Total Cooling Capacity		Comp Motor kW Input	Sensible To Total Ratio (S/T) Dry Bulb		
	cfm	L/s	kBtuh	kW		75°F 24°C	80°F 27°C	85°F 29°C	kBtuh	kW		75°F 24°C	80°F 27°C	85°F 29°C	kBtuh	kW		75°F 24°C	80°F 27°C	85°F 29°C	kBtuh	kW		75°F 24°C	80°F 27°C	85°F 29°C
10ACC-060 — CH33-60D-2F WITH G60UHV-60D-135 - CH33-62D-2F WITH G60UHV-60D-135 COOLING CAPACITY																										
63°F (17°C)	1625	765	57.2	16.8	4.71	.74	.88	.99	55.3	16.2	5.23	.75	.89	1.00	53.2	15.6	5.82	.76	.90	1.00	51.1	15.0	6.51	.77	.92	1.00
	1800	850	58.3	17.1	4.72	.76	.90	1.00	56.3	16.5	5.24	.77	.92	1.00	54.2	15.9	5.83	.78	.93	1.00	52.0	15.2	6.52	.80	.95	1.00
	1985	935	59.3	17.4	4.73	.78	.93	1.00	57.2	16.8	5.25	.79	.94	1.00	55.1	16.1	5.84	.81	.96	1.00	52.9	15.5	6.53	.82	.98	1.00
67°F (19°C)	1625	765	61.0	17.9	4.79	.58	.71	.84	59.0	17.3	5.29	.59	.72	.85	56.8	16.6	5.87	.59	.73	.87	54.5	16.0	6.56	.60	.74	.89
	1800	850	61.9	18.1	4.82	.59	.73	.87	59.8	17.5	5.32	.60	.74	.88	57.6	16.9	5.90	.61	.76	.90	55.3	16.2	6.58	.62	.77	.92
	1985	935	62.6	18.3	4.85	.61	.76	.90	60.5	17.7	5.35	.61	.77	.91	58.2	17.1	5.94	.62	.78	.93	56.0	16.4	6.61	.63	.80	.95
71°F (22°C)	1625	765	64.7	19.0	4.92	.44	.56	.69	62.6	18.3	5.43	.44	.57	.70	60.4	17.7	6.02	.44	.58	.70	58.0	17.0	6.70	.45	.58	.72
	1800	850	65.6	19.2	4.95	.45	.58	.71	63.5	18.6	5.46	.45	.58	.72	61.2	17.9	6.05	.45	.59	.73	58.8	17.2	6.74	.45	.60	.75
	1985	935	66.4	19.5	4.98	.45	.59	.73	64.2	18.8	5.49	.45	.60	.74	61.9	18.1	6.08	.46	.61	.76	59.4	17.4	6.77	.46	.62	.77
10ACC-060 — CH23-65 WITH GHR32V5-100 COOLING CAPACITY																										
63°F (17°C)	1465	690	54.3	15.9	4.62	.73	.86	.97	52.5	15.4	5.13	.73	.87	.98	50.5	14.8	5.71	.74	.88	1.00	48.6	14.2	6.40	.76	.90	1.00
	1720	810	55.9	16.4	4.63	.75	.90	1.00	54.0	15.8	5.15	.77	.91	1.00	52.0	15.2	5.73	.78	.93	1.00	50.0	14.7	6.41	.79	.94	1.00
	1920	905	56.9	16.7	4.65	.78	.93	1.00	55.0	16.1	5.16	.79	.94	1.00	53.0	15.5	5.74	.80	.96	1.00	50.9	14.9	6.42	.82	.98	1.00
67°F (19°C)	1465	690	58.0	17.0	4.66	.58	.70	.82	56.1	16.4	5.17	.58	.71	.83	54.0	15.8	5.76	.59	.72	.84	51.9	15.2	6.44	.59	.73	.86
	1720	810	59.4	17.4	4.69	.59	.73	.86	57.5	16.9	5.19	.60	.74	.88	55.3	16.2	5.78	.60	.75	.89	53.1	15.6	6.46	.61	.76	.91
	1920	905	60.3	17.7	4.72	.61	.75	.90	58.3	17.1	5.22	.61	.76	.91	56.1	16.4	5.79	.62	.78	.93	53.9	15.8	6.46	.63	.79	.95
71°F (22°C)	1465	690	61.6	18.1	4.77	.44	.56	.67	59.7	17.5	5.27	.44	.56	.68	57.6	16.9	5.85	.44	.57	.69	55.4	16.2	6.52	.44	.57	.70
	1720	810	63.0	18.5	4.82	.45	.57	.70	61.0	17.9	5.32	.45	.58	.71	58.8	17.2	5.90	.45	.59	.73	56.5	16.6	6.57	.45	.60	.74
	1920	905	63.9	18.7	4.85	.45	.59	.73	61.8	18.1	5.35	.45	.60	.74	59.5	17.4	5.93	.45	.61	.76	57.2	16.8	6.61	.46	.61	.77
10ACC-060 — CH23-68 WITH GHR32V5-100 COOLING CAPACITY																										
63°F (17°C)	1465	690	57.5	16.9	4.62	.73	.85	.98	55.6	16.3	5.11	.73	.87	.99	53.5	15.7	5.67	.75	.88	1.00	51.3	15.0	6.35	.76	.90	1.00
	1720	810	59.2	17.3	4.68	.76	.90	1.00	57.2	16.8	5.16	.77	.92	1.00	55.0	16.1	5.72	.78	.93	1.00	52.8	15.5	6.39	.80	.95	1.00
	1920	905	60.3	17.7	4.72	.79	.94	1.00	58.2	17.1	5.21	.80	.95	1.00	56.0	16.4	5.77	.81	.97	1.00	53.8	15.8	6.44	.83	.99	1.00
67°F (19°C)	1465	690	61.1	17.9	4.75	.58	.70	.82	59.0	17.3	5.24	.58	.71	.83	56.8	16.6	5.80	.59	.72	.85	54.6	16.0	6.46	.59	.73	.86
	1720	810	62.6	18.3	4.81	.60	.73	.87	60.5	17.7	5.29	.60	.75	.88	58.2	17.1	5.86	.61	.76	.90	55.9	16.4	6.53	.62	.77	.92
	1920	905	63.6	18.6	4.84	.61	.76	.91	61.4	18.0	5.33	.62	.77	.92	59.1	17.3	5.90	.63	.79	.94	56.6	16.6	6.57	.64	.81	.96
71°F (22°C)	1465	690	64.9	19.0	4.89	.44	.56	.67	62.8	18.4	5.39	.44	.56	.68	60.5	17.7	5.96	.44	.57	.69	58.1	17.0	6.63	.45	.57	.70
	1720	810	66.5	19.5	4.95	.45	.58	.71	64.3	18.8	5.44	.45	.58	.72	61.9	18.1	6.01	.45	.59	.73	59.4	17.4	6.70	.45	.60	.75
	1920	905	67.4	19.8	4.98	.45	.60	.74	65.2	19.1	5.48	.45	.60	.75	62.7	18.4	6.06	.46	.61	.77	60.1	17.6	6.74	.46	.62	.78
10ACC-060 — CB29M-51 - CB28UH-048 COOLING CAPACITY																										
63°F (17°C)	1750	825	56.0	16.4	4.62	.76	.91	1.00	54.1	15.9	5.13	.77	.92	1.00	52.1	15.3	5.71	.79	.94	1.00	50.1	14.7	6.39	.80	.95	1.00
	1800	850	56.3	16.5	4.62	.77	.91	1.00	54.3	15.9	5.13	.78	.93	1.00	52.3	15.3	5.71	.79	.95	1.00	50.3	14.7	6.39	.81	.96	1.00
	1850	875	56.5	16.6	4.62	.77	.92	1.00	54.6	16.0	5.14	.79	.94	1.00	52.6	15.4	5.71	.80	.95	1.00	50.5	14.8	6.39	.81	.97	1.00
67°F (19°C)	1750	825	59.4	17.4	4.68	.60	.74	.87	57.4	16.8	5.17	.60	.75	.89	55.3	16.2	5.76	.61	.76	.90	53.1	15.6	6.43	.62	.77	.92
	1800	850	59.6	17.5	4.69	.60	.74	.88	57.6	16.9	5.18	.61	.75	.90	55.5	16.3	5.76	.61	.77	.91	53.3	15.6	6.43	.62	.78	.93
	1850	875	59.8	17.5	4.69	.60	.75	.89	57.8	16.9	5.19	.61	.76	.90	55.7	16.3	5.76	.62	.77	.92	53.5	15.7	6.44	.62	.79	.94
71°F (22°C)	1750	825	63.0	18.5	4.81	.45	.58	.71	60.9	17.8	5.30	.45	.59	.72	58.7	17.2	5.88	.45	.59	.73	56.5	16.6	6.55	.45	.60	.75
	1800	850	63.2	18.5	4.81	.45	.58	.72	61.1	17.9	5.31	.45	.59	.73	58.9	17.3	5.88	.45	.60	.74	56.6	16.6	6.56	.46	.61	.76
	1850	875	63.4	18.6	4.82	.45	.59	.72	61.3	18.0	5.32	.45	.59	.74	59.1	17.3	5.89	.45	.60	.75	56.8	16.6	6.57	.46	.61	.76
10ACC-060 — CB29M-65 - CB28UH-060 COOLING CAPACITY																										
63°F (17°C)	1600	755	55.4	16.2	4.61	.74	.88	1.00	53.5	15.7	5.12	.75	.90	1.00	51.6	15.1	5.70	.76	.91	1.00	49.6	14.5	6.38	.78	.93	1.00
	1800	850	56.6	16.6	4.62	.77	.91	1.00	54.6	16.0	5.13	.78	.93	1.00	52.6	15.4	5.71	.79	.94	1.00	50.6	14.8	6.39	.81	.96	1.00
	2000	945	57.5	16.9	4.63	.79	.94	1.00	55.5	16.3	5.14	.80	.96	1.00	53.5	15.7	5.72	.82	.98	1.00	51.5	15.1	6.40	.84	.99	1.00
67°F (19°C)	1600	755	59.0	17.3	4.66	.59	.72	.85	57.0	16.7	5.16	.59	.73	.86	54.9	16.1	5.75	.60	.74	.87	52.7	15.4	6.43	.60	.75	.89
	1800	850	59.9	17.6	4.69	.60	.74	.88	57.9	17.0	5.18	.61	.75	.89	55.8	16.4	5.76	.61	.77	.91	53.6	15.7	6.43	.62	.78	.93
	2000	945	60.7	17.8	4.71	.61	.77	.91	58.7	17.2	5.21	.62	.78	.93	56.5	16.6	5.77	.63	.79	.95	54.3	15.9	6.44	.64	.81	.96
71°F (22°C)	1600	755	62.6	18.3	4.78	.44	.57	.69	60.6	17.8	5.28	.44	.57	.70	58.4	17.1	5.85	.45	.58	.71	56.2	16.5	6.52	.45	.59	.72
	1800	850	63.5	18.6	4.81	.45	.58	.72	61.4	18.0	5.31	.45	.59	.73	59.2	17.3	5.88	.45	.60	.74	56.9	16.7	6.56	.45	.61	.76
	2000	945	64.2	18.8	4.84	.45	.60	.75	62.2	18.2	5.34	.45	.61	.76	59.9	17.6	5.91	.46	.61	.77	57.6	16.9	6.59	.46	.63	.79
10ACC-060 — CB30M-51 - CB30U-51 COOLING CAPACITY																										
63°F (17°C)	1400	660	54.7	16.0	4.54	.72	.84	.96	52.8	15.5	5.04	.72	.85	.97	50.9	14.9	5.61	.73	.87	.99	48.8	14.3	6.28	.75	.88	1.00
	1600	755	56.2	16.5	4.57	.74	.87	1.00	54.2	15.9	5.06	.75	.89	1.00	52.2	15.3	5.62	.76	.90	1.00	50.1	14.7	6.29	.77	.92	1.00
	1800	850	57.2	16.8	4.61	.77	.91	1.00	55.4	16.2	5.09	.77	.92	1.00	53.3	15.6	5.64	.79	.94	1.00	51.1	15.0	6.30	.80	.96	1.00
67°F (19°C)	1400	660	58.3	17.1	4.64	.57	.69	.80	56.4	16.5	5.13	.58	.70	.82	54.3	15.9	5.69	.58	.71	.83	52.2	15.3	6.34	.59	.72	.85
	1600	755	59.6	17.5	4.69	.58	.71	.84	57.6	16.9	5.17	.59	.72	.86	55.5	16.3	5.74	.59	.73	.87	53.3	15.6	6.39	.60	.75	.89
	1800	850	60.6	17.8	4.73	.60	.74	.88	58.6	17.2	5.21	.60	.75	.89	56.4	16.5	5.77	.61	.76	.91	54.1	15.9	6.42	.62	.78	.93
71°F (22°C)	1400	660	62.1	18.2	4.78	.44	.55	.66	60.1	17.6	5.27	.44	.55	.67	57.9	17.0	5.84	.44	.56	.68	55.6	16.3	6.51	.44	.57	.69
	1600	755	63.3	18.6	4.83	.44	.57	.69	61.2	17.9	5.32	.44	.57	.70	59.0	17.3	5.89	.45	.58	.71	56.7	16.6	6.55	.45	.59	.72
	1800	850	64.3	18.8	4.86	.45	.58	.71	62.2	18.2	5.36	.45	.59	.72	59.9	17.6	5.92	.45	.60	.74	57.5	16.9	6.59	.45	.60	.75
10ACC-060 — CB31MV-51 COOLING CAPACITY																										
63°F (17°C)	1625	765	57.0	16.7	4.59	.74	.88	1.00	55.0	16.1	5.08	.75	.89	1.00	53.0	15.5	5.65	.76	.91	1.00	50.8	14.9	6.32	.78	.93	1.00
	1805	850	58.0	17.0	4.63	.76	.91	1.00	56.1	16.4	5.11	.78	.92	1.00	53.9	15.8	5.67	.79	.94	1.00	51.8	15.2	6.33	.80	.96	1.00
	2005	945	58.9	17.3	4.66	.79	.94	1.00	57.0	16.7	5.14	.80	.96	1.00	54.8	16.1	5.70	.82	.98	1.00	52.7	15.4	6.36	.83	.99	1.00
67°F (19°C)	1625	765	60.5	17.7	4.71	.59	.72	.85	58.4	17.1	5.20	.59	.73	.86	56.3	16.5	5.76	.60	.74	.88	54.0	15.8	6.42	.60	.75	.89
	1805	850	61.4	18.0	4.74	.60	.74	.88	59.3	17.4	5.23	.60	.75	.89	57.1	16.7	5.79	.61	.76	.91	54.8	16.1	6.45	.62	.78	.93
	2005	945	62.2	18.2	4.78	.61	.77	.91	60.1	17.6	5.26	.62	.78	.93	57.8	16.9	5.82	.63	.79	.95	55.5	16.3	6.49	.64	.81	.97
71°F (22°C)	1625	765	64.2	18.8	4.85	.44	.57	.69	62.1	18.2	5.34	.44	.57	.70	59.8	17.5	5.92	.45	.58	.71	57.5	16.9	6.58	.45	.59	.73
	1805	850	65.1	19.1	4.88	.45	.58	.71	63.0	18.5	5.38	.45	.59	.73	60.6	17.8	5.95	.45	.60	.74	58.2	17.1	6.61	.45	.60	.75
	2005	945	65.9	19.3	4.92	.45	.60	.74	63.8	18.7	5.41	.45	.61	.76	61.4	18.0	5.98	.46	.61	.77	58.9	17.3	6.65	.46	.62	.79

RATINGS

NOTE - For Temperatures and Capacities not shown in tables, see bulletin - Cooling Unit Rating Table Correction Factor Data in Miscellaneous Engineering Data section.

Entering Wet Bulb Temperature	Total Air Volume		Outdoor Air Temperature Entering Outdoor Coil																							
			85°F (29°C)						95°F (35°C)						105°F (41°C)						115°F (46°C)					
			Total Cooling Capacity		Comp Motor kW Input	Sensible To Total Ratio (S/T) Dry Bulb			Total Cooling Capacity		Comp Motor kW Input	Sensible To Total Ratio (S/T) Dry Bulb			Total Cooling Capacity		Comp Motor kW Input	Sensible To Total Ratio (S/T) Dry Bulb			Total Cooling Capacity		Comp Motor kW Input	Sensible To Total Ratio (S/T) Dry Bulb		
	cfm	L/s	kBtuh	kW		75°F 24°C	80°F 27°C	85°F 29°C	kBtuh	kW		75°F 24°C	80°F 27°C	85°F 29°C	kBtuh	kW		75°F 24°C	80°F 27°C	85°F 29°C	kBtuh	kW		75°F 24°C	80°F 27°C	85°F 29°C
10ACC-060 — CB30M-65 CB0U-65 COOLING CAPACITY																										
63°F (17°C)	1650	780	57.8	16.9	4.62	.75	.88	1.00	55.8	16.4	5.11	.75	.90	1.00	53.7	15.7	5.68	.77	.91	1.00	51.6	15.1	6.35	.78	.93	1.00
	1800	850	58.6	17.2	4.65	.76	.91	1.00	56.7	16.6	5.13	.78	.92	1.00	54.5	16.0	5.70	.79	.94	1.00	52.4	15.4	6.36	.80	.96	1.00
	1950	920	59.4	17.4	4.68	.78	.93	1.00	57.4	16.8	5.16	.79	.95	1.00	55.2	16.2	5.72	.81	.97	1.00	53.1	15.6	6.39	.82	.98	1.00
67°F (19°C)	1650	780	61.3	18.0	4.74	.59	.72	.85	59.3	17.4	5.23	.59	.73	.86	57.1	16.7	5.80	.60	.74	.88	54.8	16.1	6.46	.61	.75	.90
	1800	850	62.1	18.2	4.77	.60	.74	.88	60.0	17.6	5.26	.60	.75	.89	57.7	16.9	5.83	.61	.76	.91	55.4	16.2	6.49	.62	.78	.93
	1950	920	62.7	18.4	4.80	.61	.76	.90	60.6	17.8	5.28	.61	.77	.92	58.3	17.1	5.85	.62	.79	.94	55.9	16.4	6.52	.63	.80	.95
71°F (22°C)	1650	780	65.1	19.1	4.88	.44	.57	.69	63.0	18.5	5.38	.44	.57	.70	60.6	17.8	5.95	.45	.58	.72	58.3	17.1	6.62	.45	.59	.73
	1800	850	65.9	19.3	4.91	.45	.58	.71	63.7	18.7	5.41	.45	.59	.73	61.3	18.0	5.98	.45	.60	.74	58.9	17.3	6.65	.45	.60	.75
	1950	920	66.5	19.5	4.94	.45	.59	.73	64.3	18.8	5.43	.45	.60	.75	61.9	18.1	6.00	.46	.61	.76	59.4	17.4	6.68	.46	.62	.78
10ACC-060 — CB31MV-65 COOLING CAPACITY																										
63°F (17°C)	1625	765	58.0	17.0	4.62	.74	.88	1.00	56.0	16.4	5.11	.75	.89	1.00	53.9	15.8	5.68	.76	.91	1.00	51.7	15.2	6.35	.78	.93	1.00
	1805	850	58.9	17.3	4.65	.76	.91	1.00	57.0	16.7	5.13	.77	.92	1.00	54.8	16.1	5.70	.79	.94	1.00	52.6	15.4	6.36	.80	.96	1.00
	2005	945	59.9	17.6	4.68	.79	.94	1.00	57.9	17.0	5.17	.80	.96	1.00	55.8	16.4	5.73	.82	.97	1.00	53.6	15.7	6.39	.83	.99	1.00
67°F (19°C)	1625	765	61.5	18.0	4.74	.59	.72	.85	59.4	17.4	5.23	.59	.73	.86	57.2	16.8	5.80	.60	.74	.87	55.0	16.1	6.45	.60	.75	.89
	1805	850	62.4	18.3	4.77	.60	.74	.88	60.3	17.7	5.26	.60	.75	.89	58.0	17.0	5.83	.61	.76	.91	55.7	16.3	6.49	.62	.78	.93
	2005	945	63.2	18.5	4.80	.61	.77	.91	61.1	17.9	5.29	.62	.78	.93	58.8	17.2	5.86	.63	.79	.95	56.4	16.5	6.53	.64	.81	.96
71°F (22°C)	1625	765	65.3	19.1	4.88	.44	.57	.69	63.2	18.5	5.37	.44	.57	.70	60.8	17.8	5.95	.45	.58	.71	58.4	17.1	6.62	.45	.59	.73
	1805	850	66.2	19.4	4.91	.45	.58	.72	64.0	18.8	5.41	.45	.59	.73	61.6	18.1	5.98	.45	.60	.74	59.2	17.3	6.65	.45	.60	.75
	2005	945	67.0	19.6	4.95	.45	.60	.74	64.9	19.0	5.44	.45	.60	.75	62.4	18.3	6.01	.46	.61	.77	59.9	17.6	6.69	.46	.62	.79