LENNOX

ENGINEERING DATA

CONDENSING UNITS

13ACC

MERIT® SERIES

EXPANSION VALVE AND RFC SYSTEMS

1.5 to 5 Ton

SEER up to 14.80

Net Cooling Capacity - 18,300 to 61,000

Bulletin No. 210361
November 2003
Supersedes January 2003

CERTIFICATION APPLIES ONLY WHEN THE COMPLETE SYSTEM IS LISTED WITH ARI

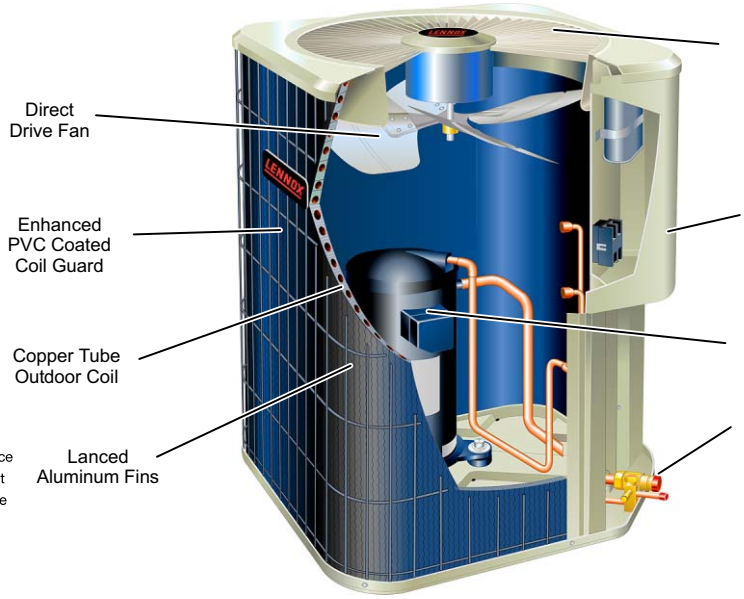

ISO 9001 REGISTERED QUALITY SYSTEMS

VERIFIED CSA Energy Performance Rendement Énergétique VÉRIFIÉ

ENERGY STAR

MODEL NUMBER IDENTIFICATION

13 AC C - 024 - 230 - 2

- **SEER** — 13
- **Unit Type** — AC - Air Conditioner
- **Series** — C
- **Cooling Capacity** - Tons (kW) — 024
  - 018 = 1.5 (5.3)
  - 024 = 2 (7.0)
  - 030 = 2.5 (8.8)
  - 036 = 3 (10.6)
  - 037 = 3 (10.6)
  - 042 = 3.5 (12.3)
  - 047 = 4 (14.1)
  - 048 = 4 (14.1)
  - 060 = 5 (17.6)
- **Voltage** — 230
  - 230 = 208/230V-1phase-60hz
- **Minor Revision Number** — 2

FEATURES

CONTENTS

ARI Rating Tables . . . . . Pages 7-20
Dimensions . . . . . Page 6
Electrical Data . . . . . Pages 4-5
Expanded Rating Tables . . . . . Pages 21-68
Features . . . . . Pages 1-2
Field Wiring . . . . . Page 3
Installation Clearances . . . . . Page 3
Model Number Identification . . . . . Page 1
Optional Accessories . . . . . Page 3
Outdoor Sound Data . . . . . Page 5
Specifications . . . . . Pages 4-5

WARRANTY

Compressor - limited warranty for five years.
All other covered components - one year.
Refer to Lennox Equipment Limited Warranty certificate included with unit for specific details.

APPLICATIONS

SEER up to 14.80.
1.5 through 5 ton (5.3 through 17.6 kW) matches with TXV or RFC.
Single-phase power supply.
Vertical air discharge allows concealment behind shrubs at grade level or out of sight on a roof.
Matching blower powered or add-on furnace evaporator units provide a wide range of cooling capacities and applications. See ARI Ratings table.
For evaporator unit data, see Coils and Blower Coils section.
Units shipped completely factory assembled, piped and wired.
Each unit test operated at the factory ensuring proper operation.
Installer must set condensing unit, connect refrigerant lines and make electrical connections to complete job.

Visit us at www.lennox.com
For the latest technical information, www.davenet.com

NOTE - Due to Lennox' ongoing committment to quality, Specifications, Ratings and Dimensions subject to change without notice and without incurring liability.
Improper installation, adjustment, alteration, service or maintenance can cause property damage or personal injury.
Installation and service must be performed by a qualified installer and servicing agency.

©2003 Lennox Industries Inc.

FEATURES

APPROVALS

Certified in accordance with the USE certification program, which is based on ARI Standard 210/240-94.
Sound rated in Lennox reverberant sound test room in accordance with test conditions included in ARI Standard 270-95.
Tested in the Lennox Research Laboratory environmental test room.
Rated according to U.S. Department of Energy (DOE) test procedures.
Units and components within bonded for grounding to meet safety standards for servicing required by UL, NEC and CEC.
Units are UL listed and CSA certified.
ISO 9001 Registered Manufacturing Quality System.
ENERGY STAR® certified units are designed to use less energy, help save money on utility bills, and help protect the environment.

CABINET

Heavy gauge steel cabinet with five station metal wash process.
Powder paint finish provides superior rust and corrosion protection.
Painted base section.
Control box is conveniently located with all controls factory wired.
Corner patch plate allows access to compressor components.
Drainage holes are provided in base section for moisture removal.

Refrigerant Line Connections, Electrical Inlets, Service Valves

Sweat connection suction and liquid lines are located on corner of unit cabinet.
Fully serviceable brass service valves prevent corrosion and provide access to refrigerant system. Suction valve can be fully shut off, while liquid valve may be front seated to manage refrigerant charge while servicing system.
Refrigerant line connections and field wiring inlets are located in one central area of cabinet for easy access. See dimension drawing.

REFRIGERANT SYSTEM

Condenser Fan

Direct drive fan moves large air volumes uniformly through entire condenser coil for high refrigerant cooling capacity.
Vertical air discharge minimizes operating sounds and eliminates damage to lawn and shrubs.
Fan motor has sleeve bearings and is inherently protected.
Motor totally enclosed for maximum protection from weather, dust and corrosion.
Rain shield on motor provides additional protection from moisture.
Louvered steel top fan guard furnished as standard.
Fan service access accomplished by removal of top panel.

Copper Tube/Enhanced Fin Coil

Lennox designed and fabricated coil.
Ripple-edged aluminum fins.
Copper tube construction.
Lanced fins provide maximum exposure of fin surface to air stream resulting in excellent heat transfer.
Fin collars grip tubing for maximum contact area.
Flared shoulder tubing connections/silver soldering construction.
Coil is factory tested under high pressure to ensure leakproof construction.
Entire coil is accessible for cleaning.
PVC coated steel wire coil guard furnished as standard.

Refrigerant Flow Control

Units applicable to expansion valve systems or RFC systems when matched with specific evaporator coils.

RFCIV METERING SYSTEM

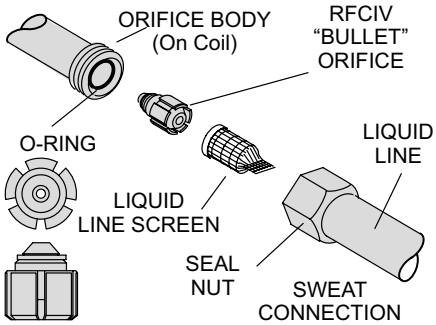

RFCIV:
Accurately meters refrigerant in system.
Refrigerant control is accomplished by exact sizing of refrigerant metering orifice.
The principle involves matching evaporator coil with proper bore size of orifice in metering device.
Equalizes pressure shortly after compressor stops, unit starts unloaded, eliminating need for additional controls.
Furnished with condensing unit.

COMPRESSOR

Copeland Scroll™ Compressor

Compressor features high efficiency with uniform suction flow, constant discharge flow and high volumetric efficiency and quiet operation.
Compressor consists of two involute spiral scrolls matched together to generate a series of crescent shaped gas pockets between them.
During compression, one scroll remains stationary while the other scroll orbits around it.
Gas is drawn into the outer pocket, the pocket is sealed as the scroll rotates.
As the spiral movement continues, gas pockets are pushed to the center of the scrolls. Volume between the pockets is simultaneously reduced.
When pocket reaches the center, gas is now at high pressure and is forced out of a port located in the center of the fixed scrolls.
During compression, several pockets are compressed simultaneously resulting in a smooth continuous compression cycle.
Continuous flank contact, maintained by centrifugal force, minimizes gas leakage and maximizes efficiency.
Scroll compressor is tolerant to the effects of slugging and contaminants. If this occurs, scrolls separate, allowing liquid or contaminants to to be worked toward the center and discharged.
Low gas pulses during compression reduces operational sound levels.
Compressor motor is internally protected from excessive current and temperature.
Compressor is installed in the unit on resilient rubber mounts for vibration free operation.

OPTIONAL ACCESSORIES - MUST BE ORDERED EXTRA

REFRIGERANT SYSTEM

Expansion Valve Kits

Must be ordered extra and field installed on certain evaporator units. See ARI Ratings tables.

Refrigerant Line Kits

Refrigerant lines (suction & liquid) are shipped refrigeration clean.
Lines are cleaned, dried, pressurized and sealed at factory.
Suction line fully insulated.
Lines are stubbed at both ends.
Kits are not available for 13ACC-047 and 13ACC-060 models and must be field fabricated.

OPTIONAL ACCESSORIES - MUST BE ORDERED EXTRA

CABINET

Hail Guards
Constructed of louvered heavy gauge steel painted to match cabinet.
Surrounds unit on all four sides to prevent damage to the coil.

Unit Stand-Off Kit
Black high density polyethylene feet are available to raise unit off of mounting surface away from damaging moisture.
Four feet are furnished per order number.

Mounting Base
High density polyethylene mounting base is lightweight, sturdy, sound-absorbing, and will withstand the effects of sun, heat, cold, moisture, oil, and refrigerant.
Provides permanent foundation for condensing units.

COMPRESSOR

Compressor Monitor
Non-adjustable switch (low ambient cut-out) prevents compressor operation when outdoor temperature is below 35°F (2°C).

Compressor Crankcase Heater
Protects against refrigerant migration that can occur during low ambient operation.

Compressor Hard Start Kit
Single-phase units are equipped with a PSC compressor motor. This type of motor normally doesn't need a potential relay and start capacitor.
In conditions such as low voltage, this kit may be required to increase the compressor starting torque.

Compressor Sound Cover
A reinforced vinyl compressor cover containing a 1-1/2 inch (38.1 mm) thick batt of fiberglass insulation.
All open edges are sealed with a one-inch wide hook and loop fastening tape.

CONTROLS

High Pressure Switch Kit
Protects the system from high pressure conditions that can be a result of fan failure or a blocked/dirty coil.
Manual reset.

Loss of Charge Kit
Helps protect the compressor from damage due to a loss of refrigerant charge.
SPST, normally-closed switch, automatic reset.

Low Ambient Kit
Condensing units operate satisfactorily down to 45°F (7°C) outdoor air temperature without any additional controls.
Low Ambient Control Kit can be field installed, allowing unit operation down to 30°F (-1°C).

Thermostat
Thermostat not furnished with unit. See Thermostats bulletin in Controls Section and Lennox Price Book.

Timed-Off Control
Kit prevents compressor short-cycling and allows time for suction and discharge pressure to equalize.
Permits compressor start-up in an unloaded condition.
Automatic reset with 5 minute delay between compressor shut-off and start-up.

INSTALLATION CLEARANCES - IN. (MM)

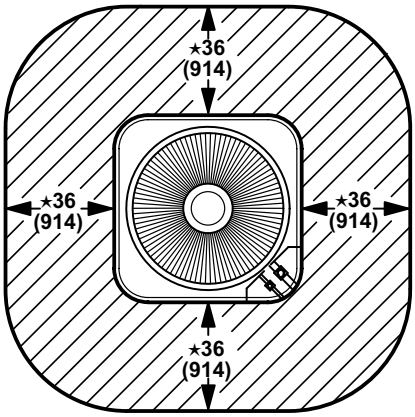

★ One of the coil sides adjacent to control box must be 30 in. (762 mm) for service.
One of the remaining sides may be 12 in. (914 mm)
One of the remaining sides may be 6 inches (305 mm)
NOTE — 48 in. (1219 mm) clearance required on top of unit.
NOTE — 24 in. (610 mm) required between two units

FIELD WIRING

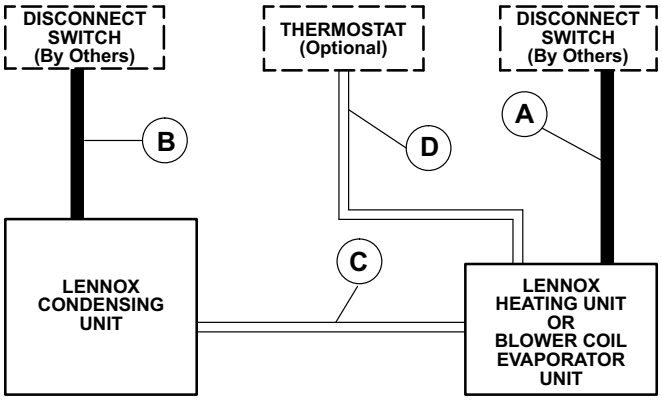

A — Two Wire Power

B — Two Wire Power — See Electrical Data

C — Two Wire Low Voltage — 18 ga. minimum

D — Four Wire Low Voltage (Electro-Mechanical) 18 ga. minimum

Five Wire Low Voltage (Electronic) 18 ga. minimum

NOTE — Field Wiring Not Furnished

All wiring must conform to NEC or CEC and local electrical codes.

SPECIFICATIONS

General Data	**Model No.**	**13ACC-018**	**13ACC-024**	**13ACC-030**	**13ACC-036**	**13ACC-037**
	Nominal Tonnage (kW)	1.5 (5.3)	2 (7.0)	2.5 (8.8)	3 (10.6)	3 (10.6)
Connections (sweat)	Liquid line o.d. - in. (mm)	3/8 (9.5)	3/8 (9.5)	3/8 (9.5)	3/8 (9.5)	3/8 (9.5)
	Suction line o.d. - in. (mm)	3/4 (19.1)	3/4 (19.1)	3/4 (19.1)	7/8 (22.2)	7/8 (22.2)
[1] Refrigerant (HCFC-22) furnished		5 lbs. 2 oz. (2.32 kg)	5 lbs. 1 oz. (2.30 kg)	6 lbs. 10 oz. (3.00 kg)	7 lbs. 3 oz. (3.26 kg)	9 lbs. 0 oz. (4.08 kg)
Condenser Coil	Net face area - sq. ft. (m^2) Outer coil	15.21 (1.41)	15.21 (1.41)	15.21 (1.41)	15.21 (1.41)	19.83 (1.84)
	Inner coil	5.44 (0.51)	5.44 (0.51)	14.50 (1.35)	14.50 (1.35)	18.90 (1.76)
	Tube diameter - in. (mm) & number of rows	5/16 (8) - 1.37	5/16 (8) - 1.37	5/16 (8) - 2	5/16 (8) - 2	5/16 (8) - 2
	Fins per inch (m)	22 (866)	22 (866)	22 (866)	22 (866)	22 (866)
Condenser Fan	Diameter - in. (mm) & Number of blades	18 (457) - 3	18 (457) - 3	18 (457) - 4	18 (457) - 4	18 (457) - 4
	Motor hp (W)	1/6 (124)	1/6 (124)	1/6 (124)	1/6 (124)	1/6 (124)
	Cfm (L/s)	2500 (1180)	2500 (1180)	2450 (1155)	2450 (1155)	2410 (1135)
	Rpm	1100	1100	1100	1100	1100
	Watts	200	200	200	200	180
Shipping Data	lbs. (kg) 1 package	155 (70)	155 (70)	175 (79)	180 (82)	191 (87)

ELECTRICAL DATA

General Data	Line voltage data - 60 hz - 1ph	208/230V	208/230V	208/230V	208/230V	208/230V
	[2] Maximum overcurrent protection (amps)	15	20	30	35	30
	[3] Minimum circuit ampacity	11.5	14.0	18.0	20.4	19.5
Compressor	Rated load amps	8.3	10.3	13.5	15.4	14.7
	Power factor	.98	.96	.96	.96	.98
	Locked rotor amps	47.0	56.0	72.5	88.0	83.0
Condenser Fan Motor	Full load amps	1.1	1.1	1.1	1.1	1.1
	Locked rotor amps	1.9	1.9	1.9	1.9	1.9

OPTIONAL ACCESSORIES - MUST BE ORDERED EXTRA

Compressor Crankcase Heater		**18K20**	**18K20**	**18K20**	**18K20**	**18K20**
Compressor Hard Start Kit		**10J42**	**10J42**	**10J42**	**10J42**	**10J42**
Compressor Monitor		**45F08**	**45F08**	**45F08**	**45F08**	**45F08**
Compressor Sound Cover		**69J03**	**69J03**	**69J03**	**69J03**	**69J03**
Hail Guard		**17L73**	**17L73**	**17L73**	**17L73**	**45M55**
High Pressure Switch Kit		**94J46**	**94J46**	**94J46**	**94J46**	**94J46**
Loss of Charge Kit		**94J47**	**94J47**	**94J47**	**94J47**	**94J47**
Low Ambient Kit		**24H77**	**24H77**	**24H77**	**24H77**	**24H77**
Mounting Base	Model Number - Catalog Number	MB2-S - **69J06**	MB2-S - **69J06**	MB2-S - **69J06**	MB2-S - **69J06**	MB2-S - **69J06**
	Dimensions - W x D x H - in.	22-1/4 x 22-1/4 x 3	22-1/4 x 22-1/4 x 3	22-1/4 x 22-1/4 x 3	22-1/4 x 22-1/4 x 3	22-1/4 x 22-1/4 x 3
	mm	565 x 565 x 76	565 x 565 x 76	565 x 565 x 76	565 x 565 x 76	565 x 565 x 76
	Shipping Weight	6 lbs. (3 kg)	6 lbs. (3 kg)	6 lbs. (3 kg)	6 lbs. (3 kg)	6 lbs. (3 kg)
Refrigerant Line Set	15 ft. (4.6 m) length	L15-41-15	L15-41-15	L15-41-15	L15-65-15	L15-65-15
	20 ft. (6 m) length	L15-41-20	L15-41-20	L15-41-20	Not Available	Not Available
	30 ft. (9.1 m) length	L15-41-30	L15-41-30	L15-41-30	L15-65-30	L15-65-30
	40 ft. (12.2 m) length	L15-41-40	L15-41-40	L15-41-40	L15-65-40	L15-65-40
	50 ft. (15.2 m) length	L15-41-50	L15-41-50	L15-41-50	L15-65-50	L15-65-50
Timed-Off Control		**47J27**	**47J27**	**47J27**	**47J27**	**47J27**
Unit Stand-Off Kit		**94J45**	**94J45**	**94J45**	**94J45**	**94J45**

NOTE — Extremes of operating range are plus 10% and minus 5% of line voltage.
[1] Refrigerant charge sufficient for 15 ft. (4.6 m) length of refrigerant lines.
[2] HACR type circuit breaker or fuse.
[3] Refer to National or Canadian Electrical Code manual to determine wire, fuse and disconnect size requirements.

SPECIFICATIONS

General Data	**Model No.**	**13ACC-042**	**13ACC-047**	**13ACC-048**	**13ACC-060**
	Nominal Tonnage (kW)	3.5 (12.3)	4 (14.1)	4 (14.1)	5 (17.6)
Connections (sweat)	Liquid line o.d. - in. (mm)	3/8 (9.5)	3/8 (9.5)	3/8 (9.5)	3/8 (9.5)
	Suction line o.d. - in. (mm)	7/8 (22.2)	1-1/8 (28.6)	7/8 (22.2)	1-1/8 (28.6)
[1] Refrigerant (HCFC-22) furnished		7 lbs. 11 oz. (3.49 kg)	10 lbs. 14 oz. (4.93 kg)	9 lbs. 14 oz. (4.48 kg)	10 lbs. 8 oz. (4.76 kg)
Condenser Coil	Net face area - sq. ft. (m^2) Outer coil	15.21 (1.41)	24.5 (2.28)	21.11 (1.96)	21.11 (1.96)
	Inner coil	14.50 (1.35)	23.56 (2.19)	20.31 (1.89)	20.31 (1.89)
	Tube diameter - in. (mm) & number of rows	5/16 (8) - 2	5/16 (8) - 2	5/16 (8) - 2	5/16 (8) - 2
	Fins per inch (m)	22 (866)	22 (866)	22 (866)	22 (866)
Condenser Fan	Diameter - in. (mm) & Number of blades	18 (457) - 4	22 (559) - 4	22 (559) - 4	22 (559) - 4
	Motor hp (W)	1/3 (249)	1/4 (186)	1/3 (249)	1/3 (249)
	Cfm (L/s)	2930 (1385)	3830 (1805)	3890 (1835)	3890 (1835)
	Rpm	1100	825	1085	1085
	Watts	310	330	375	375
Shipping Data	lbs. (kg) 1 package	186 (84)	226 (103)	250 (113)	254 (115)

ELECTRICAL DATA

General Data	Line voltage data - 60 hz - 1ph	208/230V	208/230V	208/230V	208/230V
	[2] Maximum overcurrent protection (amps)	35	40	45	60
	[3] Minimum circuit ampacity	22.5	24.6	25.9	38.0
Compressor	Rated load amps	16.5	18.3	19.2	28.9
	Power factor	.98	.94	.96	.96
	Locked rotor amps	95.0	109.0	137.0	169.0
Condenser Fan Motor	Full load amps	1.9	1.7	1.9	1.9
	Locked rotor amps	4.1	3.1	4.1	4.1

OPTIONAL ACCESSORIES - MUST BE ORDERED EXTRA

Compressor Crankcase Heater		**18K20**	**18K20**	**18K20**	**18K20**
Compressor Hard Start Kit		**10J42**	**10J42**	**81J69**	**81J69**
Compressor Monitor		**45F08**	**45F08**	**45F08**	**45F08**
Compressor Sound Cover		**69J03**	**69J03**	**69J03**	**69J03**
Hail Guard		**17L73**	**45M57**	**17L74**	**17L74**
High Pressure Switch Kit		**94J46**	**94J46**	**94J46**	**94J46**
Loss of Charge Kit		**94J47**	**94J47**	**94J47**	**94J47**
Low Ambient Kit		**24H77**	**24H77**	**24H77**	**24H77**
Mounting Base	Model Number - Catalog Number	MB2-S - **69J06**	MB2-L - **69J07**	MB2-L - **69J07**	MB2-L - **69J07**
	Dimensions - W x D x H - in.	22-1/4 x 22-1/4 x 3	32 x 34 x 3	32 x 34 x 3	32 x 34 x 3
	mm	565 x 565 x 76	813 x 864 x 76	813 x 864 x 76	813 x 864 x 76
	Shipping Weight	6 lbs. (3 kg)	15 lbs. (7 kg)	15 lbs. (7 kg)	15 lbs. (7 kg)
Refrigerant Line Set	15 ft. (4.6 m) length	L15-65-15	Field Fabricate	L15-65-15	Field Fabricate
	30 ft. (9.1 m) length	L15-65-30	Field Fabricate	L15-65-30	Field Fabricate
	40 ft. (12.2 m) length	L15-65-40	Field Fabricate	L15-65-40	Field Fabricate
	50 ft. (15.2 m) length	L15-65-50	Field Fabricate	L15-65-50	Field Fabricate
Timed-Off Control		**47J27**	**47J27**	**47J27**	**47J27**
Unit Stand-Off Kit		**94J45**	**94J45**	**94J45**	**94J45**

NOTE — Extremes of operating range are plus 10% and minus 5% of line voltage.
[1] Refrigerant charge sufficient for 15 ft. (4.6 m) length of refrigerant lines.
[2] HACR type circuit breaker or fuse.
[3] Refer to National or Canadian Electrical Code manual to determine wire, fuse and disconnect size requirements.

OUTDOOR SOUND DATA

[1] Unit Model No.	Octave Band Sound Power Levels dBA, re 10^{-12} Watts Center Frequency - HZ							[1] Sound Rating Number (dB)
	125	**250**	**500**	**1000**	**2000**	**4000**	**8000**	
13ACC-024	71	67	70	69	68.5	61.5	56.5	76
13ACC-030	68.5	67.5	69	72	68	62	59	78 (US) / 76 (Cdn)
13ACC-036, 13ACC-037	70.5	67.5	69.5	72.5	69.5	63	59	78 (US) / 76 (Cdn)
13ACC-042	73.5	73	75	74	72	68	63.5	80 (US) / 78 (Cdn)
13ACC-047, 13ACC-048	73.5	76	76	76.5	72.5	69.5	64.5	82 (US) / 80 (Cdn)
13ACC-060	73.5	74.5	77	75	72	69	64.5	82 (US) / 80 (Cdn)

NOTE - the octave sound power data does not include tonal correction.
[1] Tested according to ARI Standard 270-95 test conditions.

DIMENSIONS - INCHES (MM)

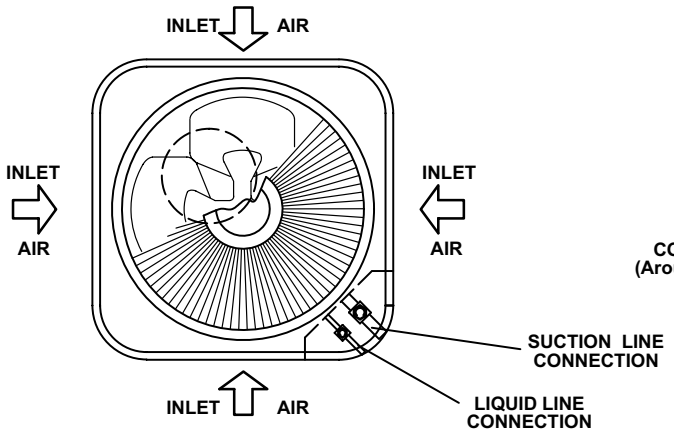

TOP VIEW

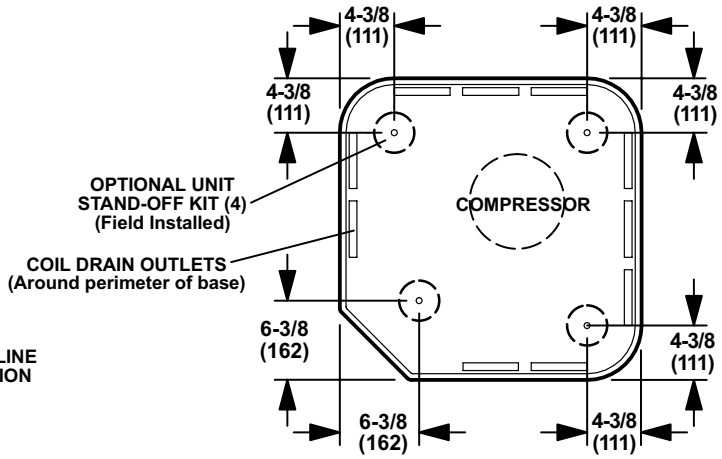

TOP VIEW BASE SECTION

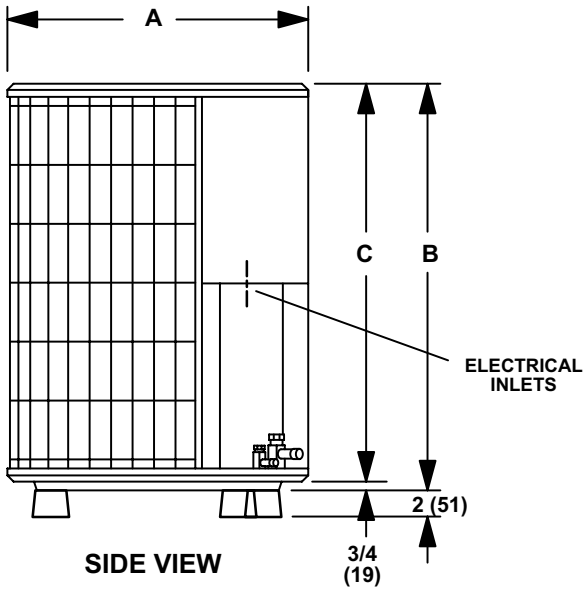

SIDE VIEW

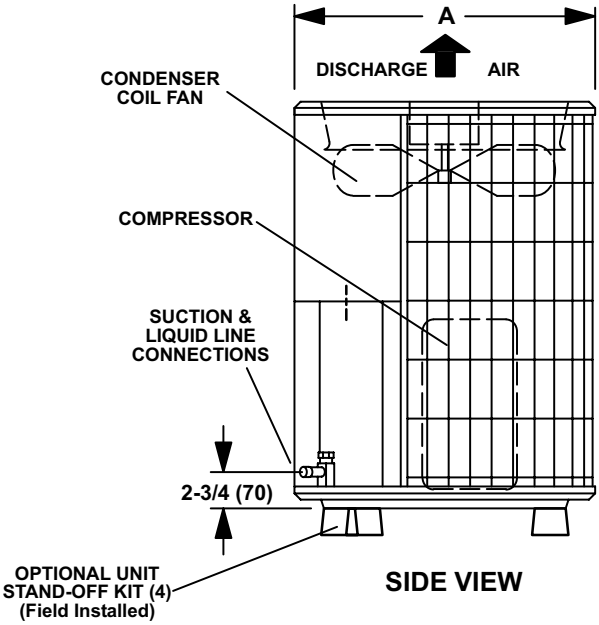

SIDE VIEW

Model No.		A	B	C
13ACC-018 13ACC-024 13ACC-030 13ACC-036 13ACC-042	in.	24-1/4	33-1/4	32-1/2
	mm	616	845	826
13ACC-037	in.	24-1/4	43-1/4	42-1/2
	mm	616	1099	1080
13ACC-047	in.	28-1/4	43-1/4	42-1/2
	mm	718	1099	1080
13ACC-048 13ACC-060	in.	28-1/4	37-1/4	36-1/2
	mm	718	946	927

ARI RATINGS — 1.5 TON

Outdoor Unit Model No. Unit Size [1] Sound Rating Number		[2] ARI Standard 210/240 Ratings: Cooling Capacity Btuh	Cooling Capacity kW	Efficiency SEER	Efficiency EER	Total Unit Watts	Indoor Unit Model No.	Refrigerant Metering Device
13ACC-018 1.5 Ton (76 dB)	**With Expansion Valve**							
	Up-Flow Coils	18,500	5.4	12.05	10.65	1740	C23-21	**26K34** Order separately
		18,600	5.5	12.15	10.70	1740	C33-18A	[4] **26K34** Order separately
		18,800	5.5	12.35	10.80	1740	C26-21	Factory Installed TXV
		19,000	5.6	12.55	10.90	1745	C23-26	**26K34** Order separately
		19,500	5.7	12.80	11.15	1745	C33-24A/B/C	[4] **26K34** Order separately
		19,500	5.7	12.80	11.15	1745	C26-26	Factory Installed TXV
		19,800	5.8	13.00	11.35	1745	[3] C33-30A/B/C	[4] **26K34** Order separately
		20,000	5.9	13.10	11.45	1750	C33-36A/B/C	[4] **26K34** Order separately
	Down-Flow Coils	18,500	5.4	12.15	10.65	1740	CR26-18N-F	**26K34** Order separately
	Horizontal Coils	18,300	5.4	12.00	10.50	1740	CH33-18A-2F	[4] **26K34** Order separately
		18,800	5.5	12.30	10.75	1745	CH23-21	**26K34** Order separately
		19,000	5.6	12.40	10.90	1740	CH23-31	**26K34** Order separately
		19,700	5.8	12.90	11.30	1745	CH33-24/30A-2F	[4] **26K34** Order separately
		20,000	5.9	13.15	11.45	1745	CH33-36A/B/C-2F	[4] **26K34** Order separately
	Blower Coil Units	19,000	5.6	12.30	10.75	1765	CB28UH-018/024 (Up-Flow/Horiz.)	Factory Installed TXV
		19,000	5.6	12.30	10.75	1765	CB29M-21/26 (Multi-Position)	Factory Installed TXV
		20,400	6.0	13.30	11.55	1765	CB30M-21/26 (Multi-Position)	Factory Installed TXV
		20,400	6.0	13.30	11.55	1765	CB30U-21/26 (Up-Flow)	Factory Installed TXV
		20,400	6.0	14.00	12.05	1690	CBX32MV-024/030 (Multi-Position)	[4] **26K34** Order separately
		20,400	6.0	13.65	11.85	1720	CB30M-31 (Multi-Position)	Factory Installed TXV
		20,400	6.0	13.65	11.85	1720	CB30U-31 (Up-Flow)	Factory Installed TXV
	With RFCIV Metering Valve							
	Up-Flow Coils	19,100	5.6	11.20	10.80	1770	C33-18A	Factory Installed RFCIV
		19,200	5.6	11.05	10.85	1770	C23-21	[5] 0.055 **(42J39)**
		19,200	5.6	11.40	10.90	1765	C26-21	[4, 5] 0.055 **(42J39)**
		19,600	5.7	11.60	11.05	1770	C23-26	[5] 0.055 **(42J39)**
		19,900	5.8	11.80	11.25	1765	C26-26	[4, 5] 0.055 **(42J39)**
		20,200	5.9	11.80	11.40	1770	C33-24A/B/C	[4, 5] 0.055 **(42J39)**
		20,400	6.0	12.00	11.55	1770	C33-30A/B/C	[4, 5] 0.055 **(42J39)**
		20,400	6.0	12.10	11.55	1765	C33-36A/B/C	[4, 5] 0.055 **(42J39)**
	Down-Flow Coils	18,900	5.5	11.20	10.70	1770	CR26-18N-F	[5] 0.055 **(42J39)**
	Horizontal Coils	18,700	5.5	11.00	10.60	1765	CH33-18A-2F	Factory Installed RFCIV
		19,600	5.7	11.30	11.10	1765	CH23-21	[5] 0.055 **(42J39)**
		19,800	5.8	11.40	11.20	1765	CH23-31	[5] 0.055 **(42J39)**
		20,000	5.9	11.90	11.30	1770	CH33-24/30A-2F	[4, 5] 0.055 **(42J39)**
		20,600	6.0	12.20	11.65	1770	CH33-36A/B/C-2F	[4, 5] 0.055 **(42J39)**

NOTE - Ratings for all C23, C26, and C33 coils include all cased and uncased coils.

[1] Sound Rating Number rated in accordance with test conditions included in ARI Standard 270.

[2] Certified in accordance with USE certification program which is based on ARI Standard 210/240; 95°F (35°C) outdoor air temperature, 80°F (27°C) db / 67°F (19°C) wb entering evaporator air with 25 ft. (7.6 m) of connecting refrigerant lines.

[3] Most popular evaporator coil.

[4] Factory installed expansion valve or RFCIV on indoor unit MUST be replaced with valve or RFCIV specified.

[5] RFCIV metering device is furnished with condensing unit for field installation in evaporator u**nit.**

ARI RATINGS — 2 TON

Outdoor Unit Model No. Unit Size [1] Sound Rating Number		[2] ARI Standard 210/240 Ratings: Cooling Capacity Btuh	kW	Efficiency SEER	EER	Total Unit Watts	Indoor Unit Model No.	Refrigerant Metering Device
13ACC-024 2 Ton (76 dB)	**With Expansion Valve**							
	Up-Flow Coils	22,400	6.6	11.95	10.45	2145	C33-18A	[6] **26K34** Order separately
		23,200	6.8	12.40	10.75	2155	C23-26	**26K34** Order separately
		23,800	7.0	12.65	11.05	2155	C26-26	Factory Installed TXV
		23,800	7.0	12.60	11.05	2155	C23-31	**26K34** Order separately
		24,000	7.0	12.70	11.10	2160	C33-24A/B/C	[6] **26K34** Order separately
		24,400	7.2	12.85	11.25	2165	C33-30A/B/C	[6] **26K34** Order separately
		24,600	7.2	13.00	11.35	2165	[3] C33-36A/B/C	[6] **26K34** Order separately
		24,800	7.3	13.15	11.45	2170	C26-31	Factory Installed TXV
		25,400	7.4	13.40	11.70	2175	C33-38A/B	[6] **26K34** Order separately
	Up-Flow Coils/Furnace	23,000	6.7	12.90	11.25	2045	C33-18A with G60UHV-36A-070	[6] **26K34** Order separately
		24,600	7.2	13.70	11.90	2065	C33-24A/B with [4] G60UHV-36A/B	[6] **26K34** Order separately
		25,000	7.3	13.90	12.10	2065	C33-30A/B with [4] G60UHV-36A/B	[6] **26K34** Order separately
		25,200	7.4	14.00	12.10	2080	C33-36A/B with [4] G60UHV-36A/B	[6] **26K34** Order separately
		26,000	7.6	14.40	12.50	2080	C33-38A/B with [4] G60UHV-36A/B	[6] **26K34** Order separately
	Down-Flow Coils	24,400	7.2	13.00	11.25	2165	CR26-30N-F	**26K34** Order separately
	Down-Flow Coils/Furnace	25,000	7.3	13.60	11.90	2105	CR26-30N-F with G60DFV-36A-070	**26K34** Order separately
	Horizontal Coils	22,200	6.5	11.80	10.35	2145	CH33-18A-2F	[6] **26K34** Order separately
		23,200	6.8	12.30	10.80	2150	CH23-21	**26K34** Order separately
		23,400	6.9	12.40	10.85	2155	CH23-31	**26K34** Order separately
		24,200	7.1	12.80	11.20	2165	CH33-24/30A-2F	[6] **26K34** Order separately
		24,600	7.2	13.00	11.35	2165	CH33-36A/B/C-2F	[6] **26K34** Order separately
		24,800	7.3	13.05	11.45	2170	CH23-41	**26K34** Order separately
		25,200	7.4	13.25	11.60	2175	CH33-42B-2F	[6] **26K34** Order separately
	Horizontal Coils/Furnace	24,800	7.3	13.80	12.00	2065	CH33-24/30A-2F with G60UHV-36A-070	[6] **26K34** Order separately
		25,200	7.4	14.00	12.15	2070	CH33-36A/B-2F with [4] G60UHV-36A/B	[6] **26K34** Order separately
		25,800	7.6	14.30	12.45	2075	CH33-42B-2F with G60UHV-36B-090	[6] **26K34** Order separately
	Blower Coil Units	23,600	6.9	12.20	10.90	2165	CB28UH-030 (Up-Flow/Horizontal)	Factory Installed TXV
		23,600	6.9	12.20	10.90	2165	CB29M-31 (Multi-Position)	Factory Installed TXV
		24,600	7.2	12.90	10.90	2255	CB30M-21/26 (Multi-Position)	Factory Installed TXV
		24,600	7.2	12.90	10.90	2255	CB30U-21/26 (Up-Flow)	Factory Installed TXV
		25,000	7.3	13.20	11.80	2120	CB30M-31 (Multi-Position)	Factory Installed TXV
		25,000	7.3	13.20	11.80	2120	CB30U-31 (Up-Flow)	Factory Installed TXV
		23,400	6.9	12.10	10.80	2165	[5] CVP10-26/EC10Q2 (Up-Flow)	Factory Installed TXV
	With RFCIV Metering Valve							
	Up-Flow Coils	22,400	6.6	11.80	10.45	2145	C33-18A	[6, 7] 0.063 **(42J43)**
		23,200	6.8	12.25	10.75	2155	C23-26	[7] 0.063 **(42J43)**
		23,800	7.0	12.45	11.05	2155	C26-26	[6, 7] 0.063 **(42J43)**
		23,800	7.0	12.40	11.05	2155	C23-31	[7] 0.063 **(42J43)**
		24,000	7.0	12.50	11.10	2160	C33-24A/B/C	[6, 7] 0.063 **(42J43)**
		24,400	7.2	12.65	11.25	2165	C33-30A/B/C	[6, 7] 0.063 **(42J43)**
		24,600	7.2	12.80	11.35	2165	C33-36A/B/C	[6, 7] 0.063 **(42J43)**
		24,800	7.3	12.95	11.45	2170	C26-31	[6, 7] 0.063 **(42J43)**
		25,400	7.4	13.20	11.70	2175	C33-38A/B	[6, 7] 0.063 **(42J43)**
	Down-Flow Coils	24,400	7.2	12.75	11.25	2165	CR26-30N-F	[7] 0.063 **(42J43)**
	Horizontal Coils	22,000	6.4	11.65	10.35	2145	CH33-18A-2F	[6, 7] 0.063 **(42J43)**
		23,200	6.8	12.10	10.80	2150	CH23-21	[7] 0.063 **(42J43)**
		23,400	6.9	12.20	10.85	2155	CH23-31	[7] 0.063 **(42J43)**
		24,200	7.1	12.60	11.20	2165	CH33-24/30A-2F	[6, 7] 0.063 **(42J43)**
		24,600	7.2	12.75	11.35	2165	CH33-36A/B/C-2F	[6, 7] 0.063 **(42J43)**
		24,800	7.3	12.85	11.45	2170	CH23-41	[7] 0.063 **(42J43)**
		25,200	7.4	13.05	11.60	2175	CH33-42B-2F	[6, 7] 0.063 **(42J43)**

NOTE - Ratings for all C23, C26, and C33 coils include all cased and uncased coils.

[1] Sound Rating Number rated in accordance with test conditions included in ARI Standard 270.

[2] Certified in accordance with USE certification program which is based on ARI Standard 210/240; 95°F (35°C) outdoor air temperature, 80°F (27°C) db / 67°F (19°C) wb entering evaporator air with 25 ft. (7.6 m) of connecting refrigerant lines.

[3] Most popular evaporator coil.

[4] Includes all heat sizes for this model.

[5] Canada Only.

[6] Factory installed expansion valve or RFCIV on indoor unit MUST be replaced with valve or RFCIV specified.

[7] RFCIV metering device is furnished with condensing unit for field installation in evaporator unit.

ARI RATINGS — 2.5 TON

Outdoor Unit Model No. / Unit Size / [1] Sound Rating Number		[2] ARI Standard 210/240 Ratings: Cooling Capacity Btuh	Cooling Capacity kW	Efficiency SEER	Efficiency EER	Total Unit Watts	Indoor Unit Model No.	Refrigerant Metering Device
13ACC-030 2.5 Ton (78 dB) US (76 dB) Canada	**With Expansion Valve**							
	Up-Flow Coils	30,800	9.0	13.10	11.35	2715	[3] C33-30A/B/C	[6] **26K34** Order separately
		31,200	9.1	13.25	11.50	2715	C33-36A/B/C	[6] **26K34** Order separately
		31,200	9.1	13.25	11.50	2715	C33-42B	[6] **26K34** Order separately
		31,400	9.2	13.40	11.55	2720	C26-31	Factory Installed TXV
		31,600	9.3	13.55	11.60	2720	C26-41	Factory Installed TXV
		32,200	9.4	13.65	11.80	2725	C33-38A/B	[6] **26K34** Order separately
	Up-Flow Coils/Furnace	31,000	9.1	14.00	12.10	2560	C33-30A/B with [4] G60UHV-36A/B	[6] **26K34** Order separately
		31,200	9.1	14.20	12.20	2560	C33-42B with G60UHV-36B-090	[6] **26K34** Order separately
		31,200	9.1	14.20	12.20	2560	C33-36A/B with [4] G60UHV-36A/B	[6] **26K34** Order separately
		32,600	9.6	14.80	12.65	2575	C33-38A/B with [4] G60UHV-36A/B	[6] **26K34** Order separately
	Down-Flow Coils	31,400	9.2	13.45	11.55	2720	CR26-36N/W-F	**26K34** Order separately
	Down-Flow Coils/Furnace	31,600	9.3	14.10	12.10	2610	CR26-36N-F with G60DFV-36A-070	**26K34** Order separately
		32,000	9.4	14.55	12.50	2560	CR26-36W-F with G60DFV-36B-090	**26K34** Order separately
	Horizontal Coils	30,600	9.0	12.95	11.25	2715	CH33-24/30A-2F	[6] **26K34** Order separately
		31,200	9.1	13.25	11.80	2715	CH33-36A/B/C-2F	[6] **26K34** Order separately
		31,600	9.3	13.40	11.60	2720	CH23-41	**26K34** Order separately
		32,200	9.4	13.65	11.80	2725	CH33-42B-2F	[6] **26K34** Order separately
	Horizontal Coils/Furnace	30,600	9.0	13.90	11.95	2560	CH33-24/30A-2F with G60UHV-36A-070	[6] **26K34** Order separately
		31,200	9.1	14.20	12.15	2565	CH33-36A/B-2F with [4] G60UHV-36A/B	[6] **26K34** Order separately
		32,200	9.4	14.65	12.55	2570	CH33-42B-2F with G60UHV-36B-090	[6] **26K34** Order separately
	Blower Coil Units	30,200	8.9	12.00	10.60	2850	CB30M-21/26 (Multi-Position)	Factory Installed TXV
		30,200	8.9	12.00	10.60	2850	CB30U-21/26 (Up-Flow)	Factory Installed TXV
		31,000	9.1	12.40	11.10	2795	CB30M-31 (Multi-Position)	Factory Installed TXV
		31,000	9.1	12.40	11.10	2795	CB30U-31 (Up-Flow)	Factory Installed TXV
		31,000	9.1	12.40	11.10	2795	CB30M-41 (Multi-Position)	Factory Installed TXV
		31,000	9.1	12.40	11.10	2795	CB30U-41/46 (Up-Flow)	[6] **26K34** Order separately
		31,200	9.1	12.60	11.30	2760	CB31MV-41 (Multi-Position)	Factory Installed TXV
		30,200	8.9	12.00	10.60	2850	[5] CVP10-41/EC10Q2 (Up-Flow)	Factory Installed TXV
	With RFCIV Metering Valve							
	Up-Flow Coils	30,800	9.0	12.20	11.35	2715	C33-30A/B/C	[6, 7] 0.071 **(42J47)**
		31,200	9.1	12.35	11.50	2715	C33-36A/B/C	[6, 7] 0.071 **(42J47)**
		31,200	9.1	12.35	11.50	2715	C33-42B	[6, 7] 0.071 **(42J47)**
		31,400	9.2	12.50	11.55	2720	C26-31	[6, 7] 0.071 **(42J47)**
		31,600	9.3	12.60	11.60	2720	C26-41	[6, 7] 0.071 **(42J47)**
		32,200	9.4	12.70	11.80	2725	C33-38A/B	[6, 7] 0.071 **(42J47)**
	Down-Flow Coils	31,400	9.2	12.50	11.55	2720	CR26-36N/W-F	[7] 0.071 **(42J47)**
	Horizontal Coils	30,400	8.9	12.05	11.20	2715	CH33-24/30A-2F	[6, 7] 0.071 **(42J47)**
		31,000	9.1	12.35	11.40	2715	CH33-36A/B/C-2F	[6, 7] 0.071 **(42J47)**
		31,600	9.3	12.50	11.60	2720	CH23-41	[7] 0.071 **(42J47)**
		32,200	9.4	12.70	11.80	2725	CH33-42B-2F	[6, 7] 0.071 **(42J47)**

NOTE - Ratings for all C23, C26, and C33 coils include all cased and uncased coils.

[1] Sound Rating Number rated in accordance with test conditions included in ARI Standard 270.

[2] Certified in accordance with USE certification program which is based on ARI Standard 210/240; 95°F (35°C) outdoor air temperature, 80°F (27°C) db / 67°F (19°C) wb entering evaporator air with 25 ft. (7.6 m) of connecting refrigerant lines.

[3] Most popular evaporator coil.

[4] Includes all heat sizes for this model.

[5] Canada Only.

[6] **Factory installed expansion valve or RFCIV on indoor unit MUST be replaced with valve or RFCIV specified.**

[7] RFCIV metering device is furnished with condensing unit for field installation in evaporator unit.

ARI RATINGS - COILS ONLY — 3 TON (-036)

Outdoor Unit Model No. Unit Size [1] Sound Rating Number		[2] ARI Standard 210/240 Ratings: Cooling Capacity Btuh	Cooling Capacity kW	Efficiency SEER	Efficiency EER	Total Unit Watts	Indoor Unit Model No.	Refrigerant Metering Device
13ACC-036 3 Ton (78 dB) US (76 dB) Canada	**With Expansion Valve**							
	Up-Flow Coils	33,600	9.8	12.00	10.25	3275	C23-41	**26K34** Order separately
		34,000	10.0	12.10	10.35	3280	C23-46	**26K34** Order separately
		34,600	10.1	12.30	10.55	3285	C33-36A/B/C	[4] **26K34** Order separately
		34,600	10.1	12.30	10.55	3285	C33-42B	[4] **26K34** Order separately
		35,000	10.3	12.35	10.65	3290	C26-31	Factory Installed TXV
		35,200	10.3	12.40	10.70	3295	C26-46	[4] **26K34** Order separately
		35,400	10.4	12.45	10.75	3295	C26-41	Factory Installed TXV
		36,000	10.6	12.65	10.90	3300	C23-51	**26K34** Order separately
		36,200	10.6	12.75	10.95	3310	C33-48B	[4] **26K34** Order separately
		36,500	10.7	12.80	11.05	3310	[3] C33-38A/B	[4] **26K34** Order separately
	Down-Flow Coils	34,200	10.0	12.15	10.45	3280	CR26-30N-F	**26K34** Order separately
		35,000	10.3	12.40	10.65	3290	CR26-36N/W-F	**26K34** Order separately
		35,200	10.3	12.55	10.70	3295	CR26-48N/W-F	**26K34** Order separately
	Horizontal Coils	34,600	10.1	12.25	10.55	3285	CH33-36A/B/C-2F	[4] **26K34** Order separately
		35,400	10.4	12.55	10.75	3295	CH23-41	**26K34** Order separately
		35,600	10.4	12.55	10.80	3300	CH23-51	**26K34** Order separately
		36,000	10.6	12.70	10.90	3305	CH33-42B-2F	[4] **26K34** Order separately
		36,400	10.7	12.80	11.00	3310	CH33-44/48B-2F	[4] **26K34** Order separately
	With RFCIV Metering Valve							
	Up-Flow Coils	33,600	9.8	11.55	10.25	3275	C23-41	[5] 0.078 **(42J51)**
		34,000	10.0	11.70	10.35	3280	C23-46	[5] 0.078 **(42J51)**
		34,600	10.1	11.85	10.55	3285	C33-36A/B/C	[4, 5] 0.078 **(42J51)**
		34,600	10.1	11.85	10.55	3285	C33-42B	[4, 5] 0.078 **(42J51)**
		35,000	10.3	12.00	10.65	3290	C26-31	[4, 5] 0.078 **(42J51)**
		35,200	10.3	12.00	10.70	3295	C26-46	[4, 5] 0.078 **(42J51)**
		35,400	10.4	12.05	10.75	3295	C26-41	[4, 5] 0.078 **(42J51)**
		36,000	10.6	12.25	10.90	3300	C23-51	[5] 0.078 **(42J51)**
		36,200	10.6	12.30	10.95	3310	C33-48B	[4, 5] 0.078 **(42J51)**
		36,400	10.7	12.40	11.00	3310	C33-38A/B	[4, 5] 0.078 **(42J51)**
	Down-Flow Coils	34,200	10.0	11.75	10.45	3280	CR26-30N-F	[5] 0.078 **(42J51)**
		35,000	10.3	12.00	10.65	3290	CR26-36N/W-F	[5] 0.078 **(42J51)**
		35,200	10.3	12.10	10.70	3295	CR26-48N/W-F	[5] 0.078 **(42J51)**
	Horizontal Coils	34,600	10.1	11.85	10.55	3285	CH33-36A/B/C-2F	[4, 5] 0.078 **(42J51)**
		35,400	10.4	12.10	10.75	3295	CH23-41	[5] 0.078 **(42J51)**
		35,600	10.4	12.15	10.80	3300	CH23-51	[5] 0.078 **(42J51)**
		36,000	10.6	12.25	10.90	3305	CH33-42B-2F	[4, 5] 0.078 **(42J51)**
		36,400	10.7	12.40	11.00	3310	CH33-44/48B-2F	[4, 5] 0.078 **(42J51)**

NOTE - Ratings for all C23, C26, and C33 coils include all cased and uncased coils.

[1] Sound Rating Number rated in accordance with test conditions included in ARI Standard 270.

[2] Certified in accordance with USE certification program which is based on ARI Standard 210/240; 95°F (35°C) outdoor air temperature, 80°F (27°C) db / 67°F (19°C) wb entering evaporator air with 25 ft. (7.6 m) of connecting refrigerant lines.

[3] Most popular evaporator coil.

[4] Factory installed expansion valve or RFCIV on indoor unit MUST be replaced with valve or RFCIV specified.

[5] RFCIV metering device is furnished with condensing unit for field installation in evaporator unit.

ARI RATINGS - COILS/FURNACES - BLOWER-COILS — 3 TON (-036)

Outdoor Unit Model No. / Unit Size / [1] Sound Rating Number		[2] ARI Standard 210/240 Ratings: Cooling Capacity Btuh	Cooling Capacity kW	Efficiency SEER	Efficiency EER	Total Unit Watts	Indoor Unit Model No.	Refrigerant Metering Device
13ACC-036 3 Ton (78 dB) US (76 dB) Canada	**With Expansion Valve**							
	Up-Flow Coils/Furnace	35,000	10.3	12.95	11.00	3175	C33-36A/B with [3] G60UHV-36A/B	[4] **26K34** Order separately
		35,000	10.3	12.95	11.00	3175	C33-42B with G60UHV-36B-090	[4] **26K34** Order separately
		36,600	10.7	13.40	11.45	3195	C33-48B with G60UHV-36B-090	[4] **26K34** Order separately
		36,800	10.8	13.50	11.50	3200	C33-38A/B with [3] G60UHV-36A/B	[4] **26K34** Order separately
	Down-Flow Coils/Furnace	34,400	10.1	12.55	10.70	3220	CR26-30N-F with G60DFV-36A-070	**26K34** Order separately
		35,400	10.4	12.75	11.00	3225	CR26-36N-F with G60DFV-36A-070	**26K34** Order separately
		35,600	10.4	13.25	11.30	3150	CR26-36W-F with G60DFV-36B-090	**26K34** Order separately
		36,000	10.6	13.25	11.40	3155	CR26-48N-F with G60DFV-36B-090	**26K34** Order separately
	Horizontal Coils/Furnace	35,000	10.3	12.90	11.00	3175	CH33-36A/B-2F with [3] G60UHV-36A/B	[4] **26K34** Order separately
		36,000	10.6	13.15	11.30	3185	CH23-41 with [3] G60UHV-36A/B	**26K34** Order separately
		36,000	10.6	13.20	11.30	3185	CH23-51 with [3] G60UHV-36A/B	**26K34** Order separately
		36,400	10.7	13.35	11.40	3190	CH33-42B-2F with G60UHV-36B-090	[4] **26K34** Order separately
		37,000	10.8	13.50	11.55	3200	CH33-44/48B-2F with G60UHV-36B-090	[4] **26K34** Order separately
	Blower Coil Units	33,600	9.8	12.05	10.40	3225	CB28UH-030 (Up-Flow/Horizontal)	Factory Installed TXV
		33,600	9.8	12.05	10.40	3225	CB29M-31 (Multi-Position)	Factory Installed TXV
		34,200	10.0	12.05	10.30	3315	CB28UH-036 (Up-Flow/Horizontal)	Factory Installed TXV
		34,200	10.0	12.05	10.30	3315	CB29M-41 (Multi-Position)	Factory Installed TXV
		35,400	10.4	12.50	10.65	3320	CB28UH-042 (Up-Flow/Horizontal)	Factory Installed TXV
		35,400	10.4	12.50	10.65	3320	CB29M-46 (Multi-Position)	[4] **26K34** Order separately
		35,600	10.4	12.75	10.75	3310	CB30M-31 (Multi-Position)	Factory Installed TXV
		35,600	10.4	12.75	10.75	3310	CB30U-31 (Up-Flow)	Factory Installed TXV
		36,000	10.6	13.05	11.10	3250	CB30M-41 (Multi-Position)	Factory Installed TXV
		36,000	10.6	13.05	11.10	3250	CB30U-41/46 (Up-Flow)	[4] **26K34** Order separately
		36,200	10.6	13.05	11.30	3210	CB30M-46 (Multi-Position)	[4] **26K34** Order separately
		36,200	10.6	13.50	11.45	3165	CB31MV-41 (Multi-Position)	Factory Installed TXV
		37,000	10.8	13.05	11.45	3225	CB30M-51 (Multi-Position)	[4] **26K34** Order separately
		37,000	10.8	13.05	11.45	3225	CB30U-51 (Up-Flow)	[4] **26K34** Order separately
		37,200	10.9	13.50	12.00	3100	CB31MV-51 (Multi-Position)	[4] **26K34** Order separately
		35,400	10.4	12.25	10.75	3290	[5] CVP10-46/EC10Q4 (Up-Flow)	Factory Installed TXV
		35,600	10.4	12.25	10.80	3290	[5] CVP10-41/EC10Q3 (Up-Flow)	Factory Installed TXV

NOTE - Ratings for all C23, C26, and C33 coils include all cased and uncased coils.

[1] Sound Rating Number rated in accordance with test conditions included in ARI Standard 270.

[2] Certified in accordance with USE certification program which is based on ARI Standard 210/240; 95°F (35°C) outdoor air temperature, 80°F (27°C) db / 67°F (19°C) wb entering evaporator air with 25 ft. (7.6 m) of connecting refrigerant lines.

[3] Includes all heat sizes for this model.

[4] Factory installed expansion valve or RFCIV on indoor unit MUST be replaced with valve or RFCIV specified.

[5] Canada Only.

ARI RATINGS - COILS ONLY — 3 TON (-037)

Outdoor Unit Model No. Unit Size [1] Sound Rating Number		[2] ARI Standard 210/240 Ratings: Cooling Capacity Btuh	kW	Efficiency SEER	EER	Total Unit Watts	Indoor Unit Model No.	Refrigerant Metering Device
13ACC-037 3 Ton (78 dB) US (76 dB) Canada	**With Expansion Valve**							
	Up-Flow Coils	33,000	9.7	12.45	10.70	3080	C23-41	**26K34** Order separately
		33,400	9.8	12.60	10.85	3085	C23-46	**26K34** Order separately
		34,000	10.0	12.80	11.00	3090	C33-36A/B/C	[4] **26K34** Order separately
		34,000	10.0	12.80	11.00	3090	C33-42B	[4] **26K34** Order separately
		34,200	10.0	12.90	11.05	3095	C26-31	Factory Installed TXV
		34,600	10.1	13.00	11.15	3100	C26-41	Factory Installed TXV
		34,600	10.1	12.90	11.20	3095	C26-46	[4] **26K34** Order separately
		35,200	10.3	13.20	11.35	3105	C23-51	[4] **26K34** Order separately
		35,400	10.4	13.25	11.40	3105	C33-48B	[4] **26K34** Order separately
		35,600	10.4	13.35	11.45	3110	[3] C33-38A/B	[4] **26K34** Order separately
	Down-Flow Coils	33,600	9.8	12.65	10.90	3085	CR26-30N-F	**26K34** Order separately
		34,400	10.1	12.90	11.10	3095	CR26-36N/W-F	**26K34** Order separately
		34,400	10.1	13.05	11.10	3095	CR26-48N/W-F	**26K34** Order separately
	Horizontal Coils	34,000	10.0	12.75	11.00	3090	CH33-36A/B/C-2F	[4] **26K34** Order separately
		34,600	10.1	13.05	11.20	3095	CH23-41	**26K34** Order separately
		34,800	10.2	13.05	11.25	3100	CH23-51	**26K34** Order separately
		35,200	10.3	13.20	11.35	3105	CH33-42B-2F	[4] **26K34** Order separately
		35,600	10.4	13.35	11.45	3110	CH33-44/48B-2F	[4] **26K34** Order separately
	With RFCIV Metering Valve							
	Up-Flow Coils	33,000	9.7	11.70	10.70	3080	C23-41	[5] 0.077 **(42J50)**
		33,200	9.7	11.80	10.75	3085	C26-31	[4, 5] 0.077 **(42J50)**
		33,400	9.8	11.80	10.85	3085	C23-46	[5] 0.077 **(42J50)**
		34,000	10.0	12.00	11.00	3090	C33-36A/B/C	[4, 5] 0.077 **(42J50)**
		34,000	10.0	12.00	11.00	3090	C33-42B	[4, 5] 0.077 **(42J50)**
		34,200	10.0	12.10	11.05	3095	C26-41	[4, 5] 0.077 **(42J50)**
		34,400	10.1	12.45	11.10	3105	C33-48B	[4, 5] 0.077 **(42J50)**
		34,600	10.1	12.10	11.20	3095	C23-51	[5] 0.077 **(42J50)**
		34,600	10.1	12.20	11.15	3100	C26-46	[4, 5] 0.077 **(42J50)**
		35,600	10.4	12.50	11.45	3110	C33-38A/B	[4, 5] 0.077 **(42J50)**
	Down-Flow Coils	33,600	9.8	11.85	10.90	3085	CR26-30N-F	[5] 0.077 **(42J50)**
		34,400	10.1	12.10	11.10	3095	CR26-36N/W-F	[5] 0.077 **(42J50)**
		34,400	10.1	12.20	11.10	3095	CR26-48N/W-F	[5] 0.077 **(42J50)**
	Horizontal Coils	34,000	10.0	12.00	11.00	3090	CH33-36A/B/C-2F	[4, 5] 0.077 **(42J50)**
		34,600	10.1	12.20	11.20	3095	CH23-41	[5] 0.077 **(42J50)**
		34,800	10.2	12.25	11.25	3100	CH23-51	[5] 0.077 **(42J50)**
		35,200	10.3	12.40	11.35	3105	CH33-42B-2F	[4, 5] 0.077 **(42J50)**
		35,600	10.4	12.50	11.45	3110	CH33-44/48B-2F	[4, 5] 0.077 **(42J50)**

NOTE - Ratings for all C23, C26, and C33 coils include all cased and uncased coils.

[1] Sound Rating Number rated in accordance with test conditions included in ARI Standard 270.

[2] Certified in accordance with USE certification program which is based on ARI Standard 210/240; 95°F (35°C) outdoor air temperature, 80°F (27°C) db / 67°F (19°C) wb entering evaporator air with 25 ft. (7.6 m) of connecting refrigerant lines.

[3] Most popular evaporator coil.

[4] Factory installed expansion valve or RFCIV on indoor unit MUST be replaced with valve or RFCIV specified.

[5] RFCIV metering device is furnished with condensing unit for field installation in evaporator unit.

ARI RATINGS - COILS/FURNACES - BLOWER-COILS — 3 TON (-037)

Outdoor Unit Model No. / Unit Size / [1] Sound Rating Number		[2] ARI Standard 210/240 Ratings: Cooling Capacity Btuh	Cooling Capacity kW	Efficiency SEER	Efficiency EER	Total Unit Watts	Indoor Unit Model No.	Refrigerant Metering Device
13ACC-037 3 Ton (78 dB) US (76 dB) Canada	**With Expansion Valve**							
	Up-Flow Coils/Furnace	34,400	10.1	13.50	11.55	2980	C33-36A/B with [3] G60UHV-36A/B	[4] **26K34** Order separately
		34,400	10.1	13.50	11.55	2980	C33-42B with G60UHV-36B-090	[4] **26K34** Order separately
		35,800	10.5	14.00	11.95	2995	C33-48B with G60UHV-36B-090	[4] **26K34** Order separately
		36,000	10.6	14.05	12.00	2995	C33-38A/B with [3] G60UHV-36A/B	[4] **26K34** Order separately
	Down-Flow Coils/Furnace	33,800	9.9	13.05	11.15	3025	CR26-30N-F with G60DFV-36A-070	**26K34** Order separately
		34,600	10.1	13.05	11.40	3030	CR26-36N-F with G60DFV-36A-070	**26K34** Order separately
		35,000	10.3	13.85	11.85	2955	CR26-36W-F with G60DFV-36B-090	**26K34** Order separately
		35,000	10.3	14.00	11.85	2955	CR26-48N-F with G60DFV-36B-090	**26K34** Order separately
	Horizontal Coils/Furnace	34,200	10.0	13.45	11.50	2975	CH33-36A/B-2F with [3] G60UHV-36A/B	[4] **26K34** Order separately
		35,000	10.3	13.75	11.75	2985	CH23-41 with [3] G60UHV-36A/B	**26K34** Order separately
		35,200	10.3	13.80	11.75	2990	CH23-51 with [3] G60UHV-36A/B	**26K34** Order separately
		35,600	10.4	13.90	11.90	2995	CH33-42B-2F with G60UHV-36B-090	[4] **26K34** Order separately
		36,000	10.6	14.05	12.00	3000	CH33-44/48B-2F with G60UHV-36B-090	[4] **26K34** Order separately
	Blower Coil Units	32,000	9.4	12.25	10.55	3030	CB28UH-030 (Up-Flow/Horizontal)	Factory Installed TXV
		32,000	9.4	12.25	10.55	3030	CB29M-31 (Multi-Position)	Factory Installed TXV
		33,000	9.7	12.25	10.60	3115	CB28UH-036 (Up-Flow/Horizontal)	Factory Installed TXV
		33,000	9.7	12.25	10.60	3115	CB29M-41 (Multi-Position)	Factory Installed TXV
		34,400	10.1	12.90	11.10	3105	CB28UH-042 (Up-Flow/Horizontal)	[4] **26K34** Order separately
		34,400	10.1	12.90	11.10	3105	CB29M-46 (Multi-Position)	[4] **26K34** Order separately
		34,400	10.1	13.40	11.50	2995	CB30M-31 (Multi-Position)	Factory Installed TXV
		34,400	10.1	13.40	11.45	3000	CB30U-31 (Up-Flow)	Factory Installed TXV
		34,600	10.1	13.25	11.35	3050	CB30M-41 (Multi-Position)	Factory Installed TXV
		34,600	10.1	13.25	11.35	3050	CB30U-41/46 (Up-Flow)	[4] **26K34** Order separately
		34,800	10.2	13.35	11.45	3040	CB30M-46 (Multi-Position)	[4] **26K34** Order separately
		35,200	10.3	13.85	11.80	2985	CB31MV-41 (Multi-Position)	Factory Installed TXV
		35,600	10.4	13.75	11.80	3020	CB30U-51 (Up-Flow)	[4] **26K34** Order separately
		36,400	10.7	14.00	12.05	3025	CB30M-51 (Multi-Position)	[4] **26K34** Order separately
		36,800	10.8	14.55	12.40	2965	CB31MV-51 (Multi-Position)	[4] **26K34** Order separately
		35,400	10.4	12.25	10.75	3290	[5] CVP10-46/EC10Q4 (Up-Flow)	Factory Installed TXV
		35,600	10.4	12.25	10.80	3290	[5] CVP10-41/EC10Q3 (Up-Flow)	Factory Installed TXV

NOTE - Ratings for all C23, C26, and C33 coils include all cased and uncased coils.

[1] Sound Rating Number rated in accordance with test conditions included in ARI Standard 270.

[2] Certified in accordance with USE certification program which is based on ARI Standard 210/240; 95°F (35°C) outdoor air temperature, 80°F (27°C) db / 67°F (19°C) wb entering evaporator air with 25 ft. (7.6 m) of connecting refrigerant lines.

[3] ncludes all heat sizes for this model.

[4] Factory installed expansion valve or RFCIV on indoor unit MUST be replaced with valve or RFCIV specified.

[5] Canada Only.

ARI RATINGS - COILS ONLY — 3.5 TON

Outdoor Unit Model No. / Unit Size / [1] Sound Rating Number		[2] ARI Standard 210/240 Ratings: Cooling Capacity Btuh	Cooling Capacity kW	Efficiency SEER	Efficiency EER	Total Unit Watts	Indoor Unit Model No.	Refrigerant Metering Device
13ACC-042 3.5 Ton (80 dB) US (78 dB) Canada	**With Expansion Valve**							
	Up-Flow Coils	37,800	11.1	12.40	10.55	3580	C33-42B	[4] **26K35** Order separately
		38,000	11.1	12.55	10.60	3585	C26-41	Factory Installed TXV
		38,500	11.3	12.50	10.75	3585	C26-46	Factory Installed TXV
		39,000	11.4	12.80	10.85	3595	C26-51/65	Factory Installed TXV
		39,500	11.6	12.80	11.00	3595	C23-51	**26K35** Order separately
		39,500	11.6	12.85	11.00	3595	C33-44C	[4] **26K35** Order separately
		39,500	11.6	12.90	11.00	3590	C33-48B/C	[4] **26K35** Order separately
		40,000	11.7	13.05	11.15	3595	[3] C33-50/60C	[4] **26K35** Order separately
	Down-Flow Coils	38,000	11.1	12.45	10.60	3585	CR26-36N/W-F	**26K35** Order separately
		39,000	11.4	12.70	10.85	3590	CR26-48N/W-F	**26K35** Order separately
	Horizontal Coils	38,500	11.3	12.65	10.75	3585	CH23-41	**26K35** Order separately
		38,500	11.3	12.65	10.75	3585	CH23-51	**26K35** Order separately
		39,500	11.6	12.85	11.00	3590	CH33-42B-2F	[4] **26K35** Order separately
		40,000	11.7	12.95	11.15	3595	CH33-44/48B-2F	[4] **26K35** Order separately
		40,000	11.7	13.00	11.10	3600	CH33-48C-2F	[4] **26K35** Order separately
		40,500	11.9	13.20	11.25	3600	CH33-50/60C-2F	[4] **26K35** Order separately
	With RFCIV Metering Valve							
	Up-Flow Coils	37,800	11.1	11.70	10.55	3580	C33-42B	[4, 5] 0.079 **(25M56)**
		38,000	11.1	11.85	10.60	3585	C26-41	[4, 5] 0.079 **(25M56)**
		38,500	11.3	11.80	10.75	3585	C26-46	[4, 5] 0.079 **(25M56)**
		39,000	11.4	12.10	10.85	3595	C26-51/65	[4, 5] 0.079 **(25M56)**
		39,500	11.6	12.10	11.00	3595	C23-51	[5] 0.079 **(25M56)**
		39,500	11.6	12.10	11.00	3595	C33-44C	[4, 5] 0.079 **(25M56)**
		39,500	11.6	12.15	11.00	3590	C33-48B/C	[4, 5] 0.079 **(25M56)**
		40,000	11.7	12.30	11.15	3595	C33-50/60C	[4, 5] 0.079 **(25M56)**
	Down-Flow Coils	38,000	11.1	11.75	10.65	3585	CR26-36N/W-F	[5] 0.079 **(25M56)**
		39,000	11.4	12.00	10.85	3590	CR26-48N/W-F	[5] 0.079 **(25M56)**
	Horizontal Coils	38,500	11.3	12.00	10.75	3585	CH23-41	[5] 0.079 **(25M56)**
		38,500	11.3	12.00	10.75	3585	CH23-51	[5] 0.079 **(25M56)**
		39,500	11.6	12.10	11.00	3590	CH33-42B-2F	[4, 5] 0.079 **(25M56)**
		40,000	11.7	12.25	11.15	3595	CH33-44/48B-2F	[4, 5] 0.079 **(25M56)**
		40,000	11.7	12.35	11.10	3600	CH33-48C-2F	[4, 5] 0.079 **(25M56)**
		40,500	11.9	12.45	11.25	3600	CH33-50/60C-2F	[4, 5] 0.079 **(25M56)**

NOTE - Ratings for all C23, C26, and C33 coils include all cased and uncased coils.

[1] Sound Rating Number rated in accordance with test conditions included in ARI Standard 270.

[2] Certified in accordance with USE certification program which is based on ARI Standard 210/240; 95°F (35°C) outdoor air temperature, 80°F (27°C) db / 67°F (19°C) wb entering evaporator air with 25 ft. (7.6 m) of connecting refrigerant lines.

[3] Most popular evaporator coil.

[4] Factory installed expansion valve or RFCIV on indoor unit MUST be replaced with valve or RFCIV specified.

[5] RFCIV metering device is furnished with condensing unit for field installation in evaporator unit.

ARI RATINGS - COILS/FURNACES - BLOWER-COILS 3.5 TON

Outdoor Unit Model No. Unit Size [1] Sound Rating Number		[2] ARI Standard 210/240 Ratings Cooling Capacity Btuh	kW	Efficiency SEER	EER	Total Unit Watts	Indoor Unit Model No.	Refrigerant Metering Device
13ACC-042 3.5 Ton (80 dB) US (78 dB) Canada	**With Expansion Valve**							
	Up-Flow Coils/Furnace	39,500	11.6	13.65	11.60	3410	C33-44C with [3] G60UHV-60C	[4] **26K35** Order separately
		39,500	11.6	13.70	11.60	3410	C33-48C with [3] G60UHV-60C	[4] **26K35** Order separately
		40,000	11.7	13.90	11.70	3415	C33-50/60C with [3] G60UHV-60C	[4] **26K35** Order separately
	Down-Flow Coils/Furnace	38,000	11.1	12.40	10.55	3595	CR26-36N-F with G60DFV-36A-070	**26K35** Order separately
		38,000	11.1	13.25	11.15	3415	CR26-36W-F with G60DFV-36B-090	**26K35** Order separately
		38,000	11.1	13.25	11.15	3415	CR26-36W-F with [3] G60DFV-60C	**26K35** Order separately
		39,500	11.6	13.40	11.45	3450	CR26-48N-F with G60DFV-36B-090	**26K35** Order separately
		39,500	11.6	13.40	11.45	3450	CR26-48N-F with [3] G60DFV-60C	**26K35** Order separately
	Horizontal Coils/Furnace	39,000	11.4	13.45	11.45	3405	CH23-41 with [3] G60UHV-60C/D	**26K35** Order separately
		39,000	11.4	13.50	11.45	3405	CH23-51 with [3] G60UHV-60C/D	**26K35** Order separately
		40,000	11.7	13.90	11.70	3415	CH33-48C-2F with [3] G60UHV-60C	[4] **26K35** Order separately
		40,500	11.9	14.00	11.85	3420	CH33-50/60C-2F with [3] G60UHV-60C	[4] **26K35** Order separately
	Blower Coil Units	36,400	10.7	11.75	10.05	3630	CB28UH-036 (Up-Flow/Horizontal)	Factory Installed TXV
		36,400	10.7	11.75	10.05	3630	CB29M-41 (Multi-Position)	Factory Installed TXV
		38,000	11.1	12.45	10.60	3590	CB28UH-042 (Up-Flow/Horizontal)	Factory Installed TXV
		38,000	11.1	12.45	10.60	3590	CB29M-46 (Multi-Position)	Factory Installed TXV
		38,500	11.3	13.00	11.00	3500	CB30M-41 (Multi-Position)	Factory Installed TXV
		38,500	11.3	13.25	11.20	3445	CB31MV-41 (Multi-Position)	Factory Installed TXV
		38,500	11.3	13.05	11.05	3485	CB30M-46 (Multi-Position)	Factory Installed TXV
		38,500	11.3	13.05	11.05	3485	CB30U-41/46 (Up-Flow)	Factory Installed TXV
		39,000	11.4	12.35	10.55	3700	CB28UH-048 (Up-Flow/Horizontal)	Factory Installed TXV
		39,000	11.4	12.35	10.55	3700	CB29M-51 (Multi-Position)	Factory Installed TXV
		40,500	11.9	13.60	11.60	3490	CB30M-51 (Multi-Position)	Factory Installed TXV
		40,500	11.9	13.60	11.60	3490	CB30U-51 (Up-Flow)	Factory Installed TXV
		41,000	12.0	14.35	12.20	3365	CB31MV-51 (Multi-Position)	Factory Installed TXV
		38,000	11.1	12.15	10.35	3665	[5] CVP10-46/EC10Q4 (Up-Flow)	Factory Installed TXV
		38,000	11.1	12.10	10.30	3695	[5] CVP10-51/EC10Q4 (Up-Flow)	Factory Installed TXV

NOTE - Ratings for all C23, C26, and C33 coils include all cased and uncased coils.

[1] Sound Rating Number rated in accordance with test conditions included in ARI Standard 270.

[2] Certified in accordance with USE certification program which is based on ARI Standard 210/240; 95°F (35°C) outdoor air temperature, 80°F (27°C) db / 67°F (19°C) wb entering evaporator air with 25 ft. (7.6 m) of connecting refrigerant lines.

[3] Includes all heat sizes for this model.

[4] Factory installed expansion valve or RFCIV on indoor unit MUST be replaced with valve or RFCIV specified.

[5] Canada Only.

ARI RATINGS - COILS ONLY — 4 TON (-047)

Outdoor Unit Model No. Unit Size [1] Sound Rating Number		[2] ARI Standard 210/240 Ratings: Cooling Capacity Btuh	kW	Efficiency SEER	EER	Total Unit Watts	Indoor Unit Model No.	Refrigerant Metering Device
13ACC-047 4 Ton (82 dB) US (80 dB) Canada	**With Expansion Valve**							
	Up-Flow Coils	43,000	12.6	12.40	10.60	4050	C26-46	Factory Installed TXV
		43,500	12.7	12.50	10.75	4050	C26-41	[4] **26K35** Order separately
		44,500	13.0	12.80	10.95	4060	C23-51	**26K35** Order separately
		45,000	13.2	12.90	11.05	4065	C26-51/65	Factory Installed TXV
		45,000	13.2	13.00	11.05	4065	C33-48B/C	[4] **26K35** Order separately
		45,500	13.3	13.05	11.20	4070	C23-51/65	**26K35** Order separately
		45,500	13.3	13.05	11.20	4070	[3] C33-50/60C	[4] **26K35** Order separately
		46,500	13.6	13.35	11.40	4080	C26-65EAP	Factory Installed TXV
	Down-Flow Coils	43,000	12.6	12.45	10.60	4050	CR26-36N/W-F	**26K35** Order separately
		44,000	12.9	12.60	10.85	4060	CR26-48N/W-F	**26K35** Order separately
		45,500	13.3	13.00	11.20	4070	CR26-60N/W-F	**26K35** Order separately
	Horizontal Coils	44,000	12.9	12.70	10.85	4060	CH23-51	**26K35** Order separately
		44,500	13.0	12.85	10.95	4060	CH23-65	**26K35** Order separately
		45,000	13.2	13.00	11.05	4070	CH33-44/48B-2F	[4] **26K35** Order separately
		46,000	13.5	13.10	11.30	4075	CH33-48C-2F	[4] **26K35** Order separately
		46,500	13.6	13.35	11.40	4080	CH23-68	**26K35** Order separately
		47,000	13.8	13.30	11.50	4080	CH33-50/60C-2F	[4] **26K35** Order separately
	With RFCIV Metering Valve							
	Up-Flow Coils	43,000	12.6	11.60	10.60	4050	C26-46	[4, 5] 0.084 **(42J54)**
		43,500	12.7	11.70	10.75	4050	C26-41	[4,5] 0.084 **(42J54)**
		44,500	13.0	12.00	10.95	4060	C23-51	[4] 0.084 **(42J54)**
		45,000	13.2	12.05	11.05	4065	C26-51/65	[4, 5] 0.084 **(42J54)**
		45,000	13.2	12.10	11.05	4065	C33-48B/C	Factory Installed RFCIV
		45,500	13.3	12.15	11.20	4070	C23-51/65	[5] 0.084 **(42J54)**
		45,500	13.3	12.15	11.20	4070	C33-50/60C	Factory Installed RFCIV
		46,500	13.6	12.45	11.40	4080	C26-65EAP	[4, 5] 0.084 **(42J54)**
	Down-Flow Coils	43,000	12.6	11.60	10.60	4050	CR26-36N/W-F	[5] 0.084 **(42J54)**
		44,000	12.9	11.75	10.85	4060	CR26-48N/W-F	[5] 0.084 **(42J54)**
		45,000	13.2	12.10	11.05	4070	CR26-60N/W-F	[5] 0.084 **(42J54)**
	Horizontal Coils	44,000	12.9	11.85	10.85	4060	CH23-51	[5] 0.084 **(42J54)**
		44,500	13.0	12.00	10.95	4060	CH23-65	[5] 0.084 **(42J54)**
		45,000	13.2	12.15	11.05	4070	CH33-44/48B-2F	[4, 5] 0.084 **(42J54)**
		45,500	13.3	12.25	11.15	4075	CH33-48C-2F	Factory Installed RFCIV
		46,500	13.6	12.45	11.40	4080	CH23-68	[5] 0.084 **(42J54)**
		46,500	13.6	12.40	11.40	4080	CH33-50/60C-2F	Factory Installed RFCIV

NOTE - Ratings for all C23, C26, and C33 coils include all cased and uncased coils.

[1] Sound Rating Number rated in accordance with test conditions included in ARI Standard 270.

[2] Certified in accordance with USE certification program which is based on ARI Standard 210/240; 95°F (35°C) outdoor air temperature, 80°F (27°C) db / 67°F (19°C) wb entering evaporator air with 25 ft. (7.6 m) of connecting refrigerant lines.

[3] Includes all heat sizes for this model.

[4] Factory installed expansion valve or RFCIV on indoor unit MUST be replaced with valve or RFCIV specified.

[5] RFCIV metering device is furnished with condensing unit for field installation in evaporator unit.

ARI RATINGS - COILS/FURNACES - BLOWER-COILS — 4 TON (-047)

Outdoor Unit Model No. / Unit Size / [1] Sound Rating Number		[2] ARI Standard 210/240 Ratings: Cooling Capacity Btuh	Cooling Capacity kW	Efficiency SEER	Efficiency EER	Total Unit Watts	Indoor Unit Model No.	Refrigerant Metering Device
13ACC-047 4 Ton (82 dB) US (80 dB) Canada	**With Expansion Valve**							
	Up-Flow Coils/Furnace	46,000	13.5	13.80	11.70	3935	C33-48B with G60UHV-36B-090	[4] **26K35** Order separately
		46,000	13.5	13.80	11.70	3935	C33-48C with [3] G60UHV-60C	[4] **26K35** Order separately
		46,500	13.6	13.85	11.80	3935	C33-50/60C with [3] G60UHV-60C	[4] **26K35** Order separately
	Down-Flow Coils/Furnace	45,000	13.2	13.30	11.40	3955	CR26-48N-F with [3] G60DFV-60C	**26K35** Order separately
		45,000	13.2	13.30	11.40	3955	CR26-48W-F with G60DFV-60D-135	**26K35** Order separately
		46,000	13.5	13.85	11.80	3900	CR26-60N-F with [3] G60DFV-60C	**26K35** Order separately
	Horizontal Coils/Furnace	45,000	13.2	13.50	11.50	3920	CH23-51 with [3] G60UHV-60C/D	**26K35** Order separately
		46,000	13.5	13.65	11.70	3930	CH23-65 with [3] G60UHV-60C/D	**26K35** Order separately
		47,000	13.8	14.00	11.95	3940	CH33-48C-2F with [3] G60UHV-60C	[4] **26K35** Order separately
		47,500	13.9	14.10	12.05	3945	CH33-50/60C-2F with [3] G60UHV-60C	[4] **26K35** Order separately
	Blower Coil Units	43,000	12.6	12.80	10.85	3965	CB30M-41 (Multi-Position)	[4] **26K35** Order separately
		43,000	12.6	13.00	11.05	3900	CB31MV-41 (Multi-Position)	[4] **26K35** Order separately
		43,000	12.6	12.10	10.40	4140	CB28UH-042 (Up-Flow/Horizontal)	Factory Installed TXV
		43,000	12.6	12.10	10.40	4140	CB29M-46 (Multi-Position)	Factory Installed TXV
		43,000	12.6	12.80	10.90	3940	CB30U-41/46 (Up-Flow)	Factory Installed TXV
		44,000	12.9	12.45	10.65	4135	CB28UH-048 (Up-Flow/Horizontal)	Factory Installed TXV
		44,000	12.9	12.45	10.65	4135	CB29M-51 (Multi-Position)	Factory Installed TXV
		44,500	13.0	12.45	10.65	4180	CB28UH-060 (Up-Flow/Horizontal)	Factory Installed TXV
		44,500	13.0	12.45	10.65	4180	CB29M-65 (Multi-Position)	Factory Installed TXV
		46,000	13.5	13.50	11.55	3980	CB30U-51 (Up-Flow)	Factory Installed TXV
		46,500	13.6	13.70	11.65	3990	CB30M-51 (Multi-Position)	Factory Installed TXV
		47,000	13.8	14.00	11.90	3955	CB30M-46 (Multi-Position)	Factory Installed TXV
		47,000	13.8	13.70	11.70	4025	CB30M-65 (Multi-Position)	Factory Installed TXV
		47,000	13.8	13.75	11.65	4030	CB30U-65 (Up-Flow)	Factory Installed TXV
		47,000	13.8	14.00	11.95	3935	CB31MV-51 (Multi-Position)	Factory Installed TXV
		47,500	13.9	14.15	12.05	3940	CB31MV-65 (Multi-Position)	Factory Installed TXV
		46,500	13.6	12.25	10.50	4420	[5] CVP10-51/EC10Q4 (Up-Flow)	Factory Installed TXV
		48,000	14.1	12.50	10.80	4440	[5] CVP10-65/EC10Q5 (Up-Flow)	Factory Installed TXV

NOTE - Ratings for all C23, C26, and C33 coils include all cased and uncased coils.

[1] Sound Rating Number rated in accordance with test conditions included in ARI Standard 270.

[2] Certified in accordance with USE certification program which is based on ARI Standard 210/240; 95°F (35°C) outdoor air temperature, 80°F (27°C) db / 67°F (19°C) wb entering evaporator air with 25 ft. (7.6 m) of connecting refrigerant lines.

[3] Includes all heat sizes for this model.

[4] **Factory installed expansion valve or RFCIV on indoor unit MUST be replaced with valve or RFCIV specified.**

[5] Canada Only.

ARI RATINGS - COILS ONLY — 4 TON (-048)

Outdoor Unit Model No. Unit Size [1] Sound Rating Number		[2] ARI Standard 210/240 Ratings: Cooling Capacity Btuh	kW	Efficiency SEER	EER	Total Unit Watts	Indoor Unit Model No.	Refrigerant Metering Device
13ACC-048 4 Ton (82 dB) US (80 dB) Canada	**With Expansion Valve**							
	Up-Flow Coils	45,000	13.2	11.70	10.05	4480	C26-46	Factory Installed TXV
		45,500	13.3	11.75	10.15	4485	C26-41	[4] **26K35** Order separately
		47,000	13.8	12.15	10.45	4500	C23-51	**26K35** Order separately
		47,000	13.8	12.15	10.45	4500	C26-51/65	Factory Installed TXV
		47,500	13.9	12.30	10.55	4505	C33-48B/C	[4] **26K35** Order separately
		48,000	14.1	12.35	10.65	4505	C23-51/65	**26K35** Order separately
		48,000	14.1	12.40	10.65	4510	[3] C33-50/60C	[4] **26K35** Order separately
		49,000	14.4	12.60	10.85	4520	C26-65EAP	Factory Installed TXV
	Down-Flow Coils	45,000	13.2	11.65	10.05	4480	CR26-36N/W-F	**26K35** Order separately
		47,000	13.8	12.05	10.45	4495	CR26-48N/W-F	**26K35** Order separately
		48,000	14.1	12.35	10.65	4510	CR26-60N/W-F	**26K35** Order separately
	Horizontal Coils	46,500	13.6	12.05	10.35	4495	CH23-51	**26K35** Order separately
		47,000	13.8	12.20	10.45	4500	CH23-65	**26K35** Order separately
		48,000	14.1	12.35	10.65	4505	CH33-44/48B-2F	[4] **26K35** Order separately
		48,500	14.2	12.45	10.75	4515	CH33-48C-2F	[4] **26K35** Order separately
		49,000	14.4	12.60	10.85	4520	CH33-50/60C-2F	[4] **26K35** Order separately
		49,500	14.5	12.65	10.95	4525	CH23-68	**26K35** Order separately
	With Expansion Valve							
	Up-Flow Coils	45,000	13.2	11.30	10.05	4480	C26-46	[4, 5] 0.093 **(78L74)**
		45,500	13.3	11.35	10.15	4485	C26-41	[4, 5] 0.093 **(78L74)**
		47,000	13.8	11.70	10.45	4500	C23-51	[5] 0.093 **(78L74)**
		47,000	13.8	11.70	10.45	4500	C26-51/65	[4, 5] 0.093 **(78L74)**
		47,500	13.9	11.85	10.55	4505	C33-48B/C	[4, 5] 0.093 **(78L74)**
		48,000	14.1	11.90	10.65	4505	C23-51/65	[5] 0.093 **(78L74)**
		48,000	14.1	12.00	10.65	4510	C33-50/60C	[4, 5] 0.093 **(78L74)**
		49,000	14.4	12.15	10.85	4520	C26-65EAP	[4, 5] 0.093 **(78L74)**
	Down-Flow Coils	45,000	13.2	11.25	10.05	4480	CR26-36N/W-F	[5] 0.093 **(78L74)**
		47,000	13.8	11.60	10.45	4495	CR26-48N/W-F	[5] 0.093 **(78L74)**
		48,000	14.1	11.95	10.65	4510	CR26-60N/W-F	[5] 0.093 **(78L74)**
	Horizontal Coils	46,500	13.6	11.65	10.35	4495	CH23-51	[5] 0.093 **(78L74)**
		47,000	13.8	11.75	10.45	4500	CH23-65	[5] 0.093 **(78L74)**
		48,000	14.1	11.90	10.65	4505	CH33-44/48B-2F	[4, 5] 0.093 **(78L74)**
		48,500	14.2	12.00	10.75	4515	CH33-48C-2F	[4, 5] 0.093 **(78L74)**
		49,000	14.4	12.15	10.85	4520	CH33-50/60C-2F	[4, 5] 0.093 **(78L74)**
		49,500	14.5	12.20	10.95	4525	CH23-68	[5] 0.093 **(78L74)**

NOTE - Ratings for all C23, C26, and C33 coils include all cased and uncased coils.

[1] Sound Rating Number rated in accordance with test conditions included in ARI Standard 270.

[2] Certified in accordance with USE certification program which is based on ARI Standard 210/240; 95°F (35°C) outdoor air temperature, 80°F (27°C) db / 67°F (19°C) wb entering evaporator air with 25 ft. (7.6 m) of connecting refrigerant lines.

[3] Most popular evaporator coil.

[4] Factory installed expansion valve or RFCIV on indoor unit MUST be replaced with valve or RFCIV specified.

[5] RFCIV metering device is furnished with condensing unit for field installation in evaporator unit.

ARI RATINGS - COILS/FURNACES - BLOWER-COILS — 4 TON (-048)

Outdoor Unit Model No. Unit Size [1] Sound Rating Number		[2] ARI Standard 210/240 Ratings: Cooling Capacity Btuh	Cooling Capacity kW	Efficiency SEER	Efficiency EER	Total Unit Watts	Indoor Unit Model No.	Refrigerant Metering Device
13ACC-048 4 Ton (82 dB) US (80 dB) Canada	**With Expansion Valve**							
	Up-Flow Coils/Furnace	48,500	14.2	13.00	11.20	4330	C33-48C with [3] G60UHV-60C	[4] **26K35** Order separately
		49,000	14.4	13.15	11.30	4335	C33-50/60C with [3] G60UHV-60C	[4] **26K35** Order separately
	Down-Flow Coils/Furnace	46,500	13.6	12.40	10.70	4350	CR26-36W-F with [3] G60DFV-60C	**26K35** Order separately
		48,000	14.1	12.75	11.00	4370	CR26-48N-F with [3] G60DFV-60C	**26K35** Order separately
		48,000	14.1	12.90	11.15	4305	CR26-48W-F with G60DFV-60D-135	**26K35** Order separately
		49,500	14.5	13.05	11.30	4385	CR26-60N-F with [3] G60DFV-60C	**26K35** Order separately
	Horizontal Coils/Furnace	48,000	14.1	12.85	11.05	4335	CH23-51 with [3] G60UHV-60C/D	**26K35** Order separately
		48,500	14.2	13.00	11.15	4345	CH23-65 with [3] G60UHV-60C/D	**26K35** Order separately
		48,500	14.2	13.10	11.20	4330	CH33-44/48B-2F with G60UHV-36B-090	[4] **26K35** Order separately
		49,000	14.4	13.20	11.30	4340	CH33-48C-2F with [3] G60UHV-60C	[4] **26K35** Order separately
		49,500	14.5	13.35	11.40	4340	CH33-50/60C-2F with [3] G60UHV-60C	[4] **26K35** Order separately
		50,500	14.8	13.45	11.55	4370	CH23-68 with [3] G60UHV-60C/D	**26K35** Order separately
	Blower Coil Units	45,000	13.2	12.50	10.70	4215	CB30M-41 (Multi-Position)	[4] **26K35** Order separately
		45,000	13.2	12.50	10.70	4200	CB31MV-41 (Multi-Position)	[4] **26K35** Order separately
		46,000	13.5	12.05	10.20	4505	CB28UH-042 (Up-Flow/Horizontal)	Factory Installed TXV
		46,000	13.5	12.05	10.20	4505	CB29M-46 (Multi-Position)	Factory Installed TXV
		46,500	13.6	12.75	10.95	4245	CB30M-46 (Multi-Position)	Factory Installed TXV
		46,500	13.6	12.75	10.95	4245	CB30U-41/46 (Up-Flow)	Factory Installed TXV
		47,000	13.8	12.25	10.50	4475	CB28UH-048 (Up-Flow/Horizontal)	Factory Installed TXV
		47,000	13.8	12.25	10.50	4475	CB29M-51 (Multi-Position)	Factory Installed TXV
		47,500	13.9	12.35	10.55	4510	CB28UH-060 (Up-Flow/Horizontal)	Factory Installed TXV
		47,500	13.9	12.35	10.55	4510	CB29M-65 (Multi-Position)	Factory Installed TXV
		48,500	14.2	13.10	11.25	4315	CB30M-51 (Multi-Position)	Factory Installed TXV
		48,500	14.2	13.10	11.25	4315	CB30U-51 (Up-Flow)	Factory Installed TXV
		48,500	14.2	13.05	11.10	4365	CB30M-65 (Multi-Position)	Factory Installed TXV
		48,500	14.2	13.05	11.10	4365	CB30U-65 (Up-Flow)	Factory Installed TXV
		48,500	14.2	13.25	11.35	4265	CB31MV-51 (Multi-Position)	Factory Installed TXV
		49,000	14.4	13.20	11.45	4285	CB31MV-65 (Multi-Position)	Factory Installed TXV
		46,500	13.6	12.25	10.50	4420	[5] CVP10-51/EC10Q4 (Up-Flow)	Factory Installed TXV
		48,000	14.1	12.50	10.80	4440	[5] CVP10-65/EC10Q5 (Up-Flow)	Factory Installed TXV

NOTE - Ratings for all C23, C26, and C33 coils include all cased and uncased coils.

[1] Sound Rating Number rated in accordance with test conditions included in ARI Standard 270.

[2] Certified in accordance with USE certification program which is based on ARI Standard 210/240; 95°F (35°C) outdoor air temperature, 80°F (27°C) db / 67°F (19°C) wb entering evaporator air with 25 ft. (7.6 m) of connecting refrigerant lines.

[3] Includes all heat sizes for this model.

[4] Factory installed expansion valve or RFCIV on indoor unit MUST be replaced with valve or RFCIV specified.

[5] Canada Only.

Outdoor Unit Model No. Unit Size [1] Sound Rating Number		[2] ARI Standard 210/240 Ratings Cooling Capacity Btuh	kW	Efficiency SEER	EER	Total Unit Watts	Indoor Unit Model No.	Refrigerant Metering Device
13ACC-060 5 Ton (82 dB) US (80 dB) Canada	**With Expansion Valve**							
	Up-Flow Coils	57,500	16.9	12.05	10.20	5630	C26-51/65	Factory Installed TXV
		58,500	17.1	12.20	10.35	5645	C23-51/65	**26K35** Order separately
		59,000	17.3	12.25	10.45	5655	C33-48C	[6] **26K35** Order separately
		59,500	17.4	12.35	10.50	5665	C33-60D	[6] **26K35** Order separately
		60,000	17.6	12.40	10.60	5665	C33-50/60C	[6] **26K35** Order separately
		60,500	17.7	12.55	10.65	5675	C26-65EAP	Factory Installed TXV
		61,000	17.9	12.65	10.75	5685	[3] C33-62D	[6] **26K35** Order separately
	Up-Flow Coils/Furnace	58,000	17.0	12.80	10.80	5370	C33-48C with [4] G60UHV-60C	[6] **26K35** Order separately
		59,000	17.3	13.00	10.95	5380	C33-50/60C with [4] G60UHV-60C	[6] **26K35** Order separately
		59,000	17.3	13.00	10.95	5380	C33-60D with G60UHV-60D-135	[6] **26K35** Order separately
		60,500	17.7	13.20	11.20	5400	C33-62D with G60UHV-60D-135	[6] **26K35** Order separately
	Down-Flow Coils	57,000	16.7	12.00	10.10	5630	CR26-48N/W-F	**26K35** Order separately
		59,000	17.3	12.25	10.45	5650	CR26-60N/W-F	**26K35** Order separately
	Down-Flow Coils/Furnace	58,000	17.0	12.20	10.40	5570	CR26-48N-F with [4] G60DFV-60C	**26K35** Order separately
		58,500	17.1	12.35	10.60	5530	CR26-48W-F with G60DFV-60D-135	**26K35** Order separately
		59,500	17.4	12.50	10.65	5590	CR26-60N-F with [4] G60DFV-60C	**26K35** Order separately
		60,000	17.6	12.65	10.80	5550	CR26-60W-F with G60DFV-60D-135	**26K35** Order separately
	Horizontal Coils	58,000	17.0	12.05	10.30	5635	CH23-65	**26K35** Order separately
		60,000	17.6	12.40	10.60	5665	CH33-48C-2F	[6] **26K35** Order separately
		60,000	17.6	12.45	10.60	5670	CH33-60D-2F	[6] **26K35** Order separately
		60,500	17.7	12.55	10.65	5675	CH33-50/60C-2F	[6] **26K35** Order separately
		60,500	17.7	12.55	10.65	5675	CH33-62D-2F	[6] **26K35** Order separately
		61,000	17.9	12.65	10.75	5685	CH23-68	**26K35** Order separately
	Horizontal Coils/Furnace	57,500	16.9	12.65	10.75	5355	CH23-65 with [4] G60UHV-60C/D	**26K35** Order separately
		59,000	17.3	13.00	10.95	5380	CH33-48C-2F with [4] G60UHV-60C	[6] **26K35** Order separately
		59,500	17.4	13.05	11.05	5385	CH33-60D-2F with G60UHV-60D-135	[6] **26K35** Order separately
		60,000	17.6	13.15	11.15	5390	CH33-50/60C-2F with [4] G60UHV-60C	[6] **26K35** Order separately
		60,000	17.6	13.10	11.15	5390	CH33-62D-2F with G60UHV-60D-135	[6] **26K35** Order separately
		60,500	17.7	13.25	11.20	5400	CH23-68 with [4] G60UHV-60C/D	**26K35** Order separately
	Blower Coil Units	55,000	16.1	11.40	9.65	5700	CB28UH-048 (Up-Flow/Horizontal)	Factory Installed TXV
		55,000	16.1	11.40	9.65	5700	CB29M-51 (Multi-Position)	Factory Installed TXV
		55,000	16.1	11.50	9.75	5640	CB28UH-060 (Up-Flow/Horizontal)	Factory Installed TXV
		55,000	16.1	11.50	9.75	5640	CB29M-65 (Multi-Position)	Factory Installed TXV
		55,500	16.3	12.50	10.60	5240	CB30M-51 (Multi-Position)	Factory Installed TXV
		55,500	16.3	12.50	10.60	5240	CB30U-51 (Up-Flow)	Factory Installed TXV
		55,500	16.3	12.65	10.70	5190	CB31MV-51 (Multi-Position)	Factory Installed TXV
		57,000	16.7	12.50	10.55	5395	CB30M-65 (Multi-Position)	Factory Installed TXV
		57,000	16.7	12.50	10.55	5395	CB30U-65 (Up-Flow)	Factory Installed TXV
		57,000	16.7	12.60	10.65	5360	CB31MV-65 (Multi-Position)	Factory Installed TXV
		56,000	16.4	12.00	10.20	5500	[5] CVP10-65/EC10Q5 (Up-Flow)	Factory Installed TXV
	With RFCIV Metering Valve							
	Up-Flow Coils	57,500	16.9	11.70	10.20	5630	C26-51/65	[6, 7] 0.099 **(42J62)**
		58,500	17.1	11.85	10.35	5645	C23-51/65	[7] 0.099 **(42J62)**
		59,000	17.3	11.90	10.45	5655	C33-48C	[6, 7] 0.099 **(42J62)**
		59,500	17.4	12.00	10.50	5665	C33-60D	[6, 7] 0.099 **(42J62)**
		60,000	17.6	12.00	10.60	5665	C33-50/60C	[6, 7] 0.099 **(42J62)**
		60,500	17.7	12.20	10.65	5675	C26-65EAP	[6, 7] 0.099 **(42J62)**
		61,000	17.9	12.30	10.75	5685	C33-62D	[6, 7] 0.099 **(42J62)**
	Down-Flow Coils	57,000	16.7	11.60	10.10	5630	CR26-48N/W-F	[7] 0.099 **(42J62)**
		59,000	17.3	11.90	10.45	5650	CR26-60N/W-F	[7] 0.099 **(42J62)**
	Horizontal Coils	58,000	17.0	11.70	10.30	5635	CH23-65	[7] 0.099 **(42J62)**
		60,000	17.6	12.05	10.60	5665	CH33-48C-2F	[6, 7] 0.099 **(42J62)**
		60,000	17.6	12.10	10.60	5670	CH33-60D-2F	[6, 7] 0.099 **(42J62)**
		60,500	17.7	12.20	10.65	5675	CH33-50/60C-2F	[6, 7] 0.099 **(42J62)**
		60,500	17.7	12.20	10.65	5675	CH33-62D-2F	[6, 7] 0.099 **(42J62)**
		61,000	17.9	12.30	10.75	5685	CH23-68	[7] 0.099 **(42J62)**

NOTE - Ratings for all C23, C26, and C33 coils include all cased and uncased coils.

[1] Sound Rating Number rated in accordance with test conditions included in ARI Standard 270.

[2] Certified in accordance with USE certification program which is based on ARI Standard 210/240; 95°F (35°C) outdoor air temperature, 80°F (27°C) db / 67°F (19°C) wb entering evaporator air with 25 ft. (7.6 m) of connecting refrigerant lines.

[3] Most popular evaporator coil.

[4] Includes all heat sizes for this model.

[5] Canada Only.

[6] Factory installed expansion valve or RFCIV on indoor unit MUST be replaced with valve or RFCIV specified.

[7] RFCIV metering device is furnished with condensing unit for field installation in evaporator unit.

NOTE - For Temperatures and Capacities not shown in tables, see bulletin - Cooling Unit Rating Table Correction Factor Data in Miscellaneous Engineering Data section.

Entering Wet Bulb Temperature	Total Air Volume		Outdoor Air Temperature Entering Outdoor Coil																							
			85°F (29°C)						95°F (35°C)						105°F (41°C)						115°F (46°C)					
			Total Cooling Capacity		Comp Motor kW Input	Sensible To Total Ratio (S/T) Dry Bulb			Total Cooling Capacity		Comp Motor kW Input	Sensible To Total Ratio (S/T) Dry Bulb			Total Cooling Capacity		Comp Motor kW Input	Sensible To Total Ratio (S/T) Dry Bulb			Total Cooling Capacity		Comp Motor kW Input	Sensible To Total Ratio (S/T) Dry Bulb		
	cfm	L/s	kBtuh	kW		75°F 24°C	80°F 27°C	85°F 29°C	kBtuh	kW		75°F 24°C	80°F 27°C	85°F 29°C	kBtuh	kW		75°F 24°C	80°F 27°C	85°F 29°C	kBtuh	kW		75°F 24°C	80°F 27°C	85°F 29°C
13ACC-018 - C23-21 TXV COOLING CAPACITY																										
63°F (17°C)	400	190	17.0	5.0	1.19	.70	.81	.91	16.4	4.8	1.35	.71	.82	.92	15.9	4.7	1.53	.72	.83	.94	15.2	4.5	1.75	.73	.85	.96
	600	285	18.7	5.5	1.19	.76	.88	.99	18.3	5.4	1.35	.77	.91	1.00	17.6	5.2	1.54	.79	.93	1.00	16.8	4.9	1.75	.81	.96	1.00
	800	380	19.6	5.7	1.19	.81	.95	1.00	19.3	5.7	1.36	.83	.98	1.00	18.7	5.5	1.54	.85	1.00	1.00	17.9	5.2	1.76	.88	1.00	1.00
67°F (19°C)	400	190	17.9	5.2	1.19	.58	.68	.77	17.4	5.1	1.35	.58	.68	.78	16.8	4.9	1.53	.59	.69	.80	16.1	4.7	1.75	.59	.70	.81
	600	285	19.6	5.7	1.19	.61	.73	.84	19.2	5.6	1.36	.62	.74	.87	18.7	5.5	1.54	.63	.76	.89	17.9	5.2	1.76	.64	.78	.92
	800	380	20.6	6.0	1.20	.64	.78	.91	20.2	5.9	1.36	.65	.80	.94	19.7	5.8	1.55	.67	.82	.98	18.9	5.5	1.76	.68	.85	1.00
71°F (22°C)	400	190	18.6	5.5	1.19	.46	.56	.65	18.3	5.4	1.35	.46	.56	.66	17.7	5.2	1.54	.46	.57	.67	17.0	5.0	1.75	.46	.57	.68
	600	285	20.4	6.0	1.19	.48	.59	.70	20.0	5.9	1.36	.48	.60	.72	19.6	5.7	1.55	.48	.61	.73	18.8	5.5	1.76	.48	.62	.75
	800	380	21.4	6.3	1.20	.49	.62	.75	21.0	6.2	1.36	.49	.63	.77	20.6	6.0	1.55	.50	.65	.79	19.9	5.8	1.77	.50	.67	.82
13ACC-018 - C23-21 RFC COOLING CAPACITY																										
63°F (17°C)	400	190	17.5	5.1	1.21	.71	.81	.92	16.9	5.0	1.39	.71	.83	.93	16.3	4.8	1.57	.72	.84	.95	15.5	4.5	1.80	.74	.86	.97
	600	285	19.5	5.7	1.21	.77	.90	1.00	18.9	5.5	1.38	.78	.92	1.00	18.1	5.3	1.57	.80	.94	1.00	17.2	5.0	1.80	.82	.97	1.00
	800	380	20.8	6.1	1.22	.83	.98	1.00	20.0	5.9	1.38	.85	.99	1.00	19.2	5.6	1.57	.87	1.00	1.00	18.4	5.4	1.80	.90	1.00	1.00
67°F (19°C)	400	190	18.5	5.4	1.21	.58	.68	.78	17.9	5.2	1.38	.58	.69	.79	17.3	5.1	1.57	.58	.70	.80	16.5	4.8	1.80	.59	.71	.82
	600	285	20.8	6.1	1.22	.62	.74	.86	20.0	5.9	1.38	.62	.76	.88	19.2	5.6	1.57	.63	.77	.91	18.3	5.4	1.80	.64	.79	.93
	800	380	22.0	6.4	1.22	.65	.80	.95	21.2	6.2	1.38	.66	.82	.97	20.4	6.0	1.57	.68	.84	.99	19.3	5.7	1.79	.69	.87	1.00
71°F (22°C)	400	190	19.4	5.7	1.21	.45	.56	.65	18.8	5.5	1.38	.46	.56	.66	18.1	5.3	1.57	.46	.57	.67	17.3	5.1	1.80	.46	.57	.68
	600	285	21.8	6.4	1.22	.47	.60	.72	21.0	6.2	1.39	.48	.61	.73	20.2	5.9	1.57	.48	.62	.75	19.2	5.6	1.80	.48	.63	.76
	800	380	23.2	6.8	1.22	.49	.64	.78	22.4	6.6	1.39	.50	.65	.80	21.4	6.3	1.58	.50	.66	.82	20.4	6.0	1.80	.51	.68	.84
13ACC-018 - C33-18A TXV COOLING CAPACITY																										
63°F (17°C)	400	190	17.1	5.0	1.19	.71	.82	.92	16.5	4.8	1.35	.72	.83	.94	15.9	4.7	1.53	.73	.84	.96	15.2	4.5	1.75	.74	.86	.98
	600	285	18.9	5.5	1.19	.77	.91	1.00	18.3	5.4	1.35	.79	.93	1.00	17.6	5.2	1.54	.80	.95	1.00	16.7	4.9	1.75	.82	.98	1.00
	800	380	20.0	5.9	1.19	.84	.99	1.00	19.3	5.7	1.36	.85	1.00	1.00	18.7	5.5	1.54	.88	1.00	1.00	17.9	5.2	1.76	.90	1.00	1.00
67°F (19°C)	400	190	18.0	5.3	1.19	.58	.68	.78	17.4	5.1	1.35	.58	.69	.79	16.8	4.9	1.53	.58	.70	.81	16.0	4.7	1.75	.59	.71	.83
	600	285	19.9	5.8	1.19	.62	.75	.87	19.3	5.7	1.36	.62	.76	.89	18.6	5.5	1.54	.63	.78	.92	17.7	5.2	1.76	.64	.80	.94
	800	380	21.0	6.2	1.20	.66	.81	.96	20.4	6.0	1.36	.67	.83	.98	19.6	5.7	1.54	.68	.85	1.00	18.7	5.5	1.76	.69	.88	1.00
71°F (22°C)	400	190	18.7	5.5	1.19	.46	.56	.66	18.2	5.3	1.35	.45	.56	.66	17.6	5.2	1.54	.45	.57	.67	16.8	4.9	1.75	.46	.57	.68
	600	285	20.8	6.1	1.20	.48	.60	.72	20.2	5.9	1.36	.48	.61	.74	19.5	5.7	1.55	.48	.62	.75	18.7	5.5	1.76	.48	.63	.77
	800	380	22.0	6.4	1.20	.50	.64	.78	21.4	6.3	1.36	.50	.66	.80	20.6	6.0	1.55	.50	.67	.83	19.7	5.8	1.77	.51	.68	.85
13ACC-018 - C33-18A RFC COOLING CAPACITY																										
63°F (17°C)	400	190	17.5	5.1	1.22	.71	.82	.93	16.8	4.9	1.38	.72	.84	.95	16.1	4.7	1.58	.73	.85	.97	15.3	4.5	1.81	.75	.87	.99
	600	285	19.5	5.7	1.22	.78	.92	1.00	18.7	5.5	1.38	.79	.94	1.00	17.8	5.2	1.57	.81	.97	1.00	16.9	5.0	1.80	.83	.99	1.00
	800	380	20.6	6.0	1.21	.85	1.00	1.00	19.8	5.8	1.38	.87	1.00	1.00	19.0	5.6	1.57	.89	1.00	1.00	18.1	5.3	1.80	.92	1.00	1.00
67°F (19°C)	400	190	18.4	5.4	1.21	.58	.68	.79	17.8	5.2	1.38	.58	.69	.80	17.0	5.0	1.57	.59	.70	.82	16.2	4.7	1.80	.60	.72	.84
	600	285	20.6	6.0	1.22	.62	.75	.89	19.8	5.8	1.38	.63	.77	.91	18.9	5.5	1.58	.64	.79	.93	17.9	5.2	1.80	.65	.81	.96
	800	380	21.8	6.4	1.22	.66	.82	.98	21.0	6.2	1.38	.67	.84	1.00	20.0	5.9	1.57	.69	.86	1.00	18.9	5.5	1.80	.70	.89	1.00
71°F (22°C)	400	190	19.3	5.7	1.21	.45	.56	.66	18.6	5.5	1.38	.45	.56	.67	17.9	5.2	1.57	.46	.57	.68	17.0	5.0	1.80	.46	.58	.69
	600	285	21.6	6.3	1.21	.47	.60	.73	20.8	6.1	1.38	.47	.61	.74	19.9	5.8	1.57	.48	.62	.76	18.9	5.5	1.80	.49	.64	.78
	800	380	23.0	6.7	1.22	.49	.65	.80	22.0	6.4	1.38	.50	.66	.82	21.0	6.2	1.58	.50	.67	.84	20.0	5.9	1.80	.51	.69	.86
13ACC-018 - C26-21 TXV COOLING CAPACITY																										
63°F (17°C)	400	190	17.3	5.1	1.18	.71	.82	.93	16.7	4.9	1.35	.72	.84	.95	16.0	4.7	1.54	.73	.85	.97	15.2	4.5	1.75	.75	.87	.99
	600	285	19.2	5.6	1.19	.79	.93	1.00	18.5	5.4	1.35	.80	.95	1.00	17.8	5.2	1.54	.82	.97	1.00	16.9	5.0	1.76	.84	.99	1.00
	800	380	20.4	6.0	1.20	.86	1.00	1.00	19.8	5.8	1.36	.88	1.00	1.00	19.1	5.6	1.54	.90	1.00	1.00	18.2	5.3	1.76	.93	1.00	1.00
67°F (19°C)	400	190	18.1	5.3	1.19	.58	.69	.79	17.5	5.1	1.35	.58	.69	.80	16.9	5.0	1.53	.59	.71	.82	16.1	4.7	1.75	.60	.72	.84
	600	285	20.2	5.9	1.19	.63	.76	.89	19.5	5.7	1.36	.63	.78	.91	18.8	5.5	1.54	.64	.79	.93	17.8	5.2	1.75	.65	.81	.96
	800	380	21.4	6.3	1.20	.67	.83	.97	20.6	6.0	1.36	.68	.85	.99	19.8	5.8	1.55	.70	.88	1.00	18.8	5.5	1.76	.71	.90	1.00
71°F (22°C)	400	190	18.9	5.5	1.19	.46	.56	.66	18.3	5.4	1.35	.45	.56	.67	17.7	5.2	1.54	.46	.57	.68	16.9	5.0	1.75	.46	.58	.69
	600	285	21.2	6.2	1.20	.48	.61	.74	20.4	6.0	1.36	.48	.62	.75	19.7	5.8	1.55	.48	.63	.77	18.8	5.5	1.77	.49	.64	.79
	800	380	22.4	6.6	1.20	.50	.66	.81	21.6	6.3	1.36	.51	.67	.83	20.8	6.1	1.55	.51	.69	.85	19.9	5.8	1.77	.52	.70	.88
13ACC-018 - C26-21 RFC COOLING CAPACITY																										
63°F (17°C)	400	190	17.6	5.2	1.21	.72	.83	.94	17.0	5.0	1.38	.73	.85	.96	16.2	4.7	1.57	.74	.86	.98	15.4	4.5	1.80	.75	.88	1.00
	600	285	19.7	5.8	1.21	.79	.94	1.00	18.9	5.5	1.38	.81	.96	1.00	18.0	5.3	1.57	.83	.98	1.00	17.1	5.0	1.80	.85	1.00	1.00
	800	380	21.0	6.2	1.22	.87	1.00	1.00	20.2	5.9	1.38	.89	1.00	1.00	19.4	5.7	1.57	.91	1.00	1.00	18.5	5.4	1.80	.94	1.00	1.00
67°F (19°C)	400	190	18.6	5.5	1.21	.58	.69	.80	17.9	5.2	1.38	.58	.70	.81	17.1	5.0	1.57	.59	.71	.83	16.3	4.8	1.80	.60	.73	.85
	600	285	20.8	6.1	1.21	.63	.77	.90	20.0	5.9	1.38	.64	.78	.92	19.1	5.6	1.57	.65	.80	.94	18.1	5.3	1.80	.66	.82	.97
	800	380	22.2	6.5	1.22	.67	.84	.99	21.2	6.2	1.38	.69	.87	1.00	20.2	5.9	1.57	.70	.89	1.00	19.1	5.6	1.80	.72	.91	1.00
71°F (22°C)	400	190	19.4	5.7	1.22	.45	.56	.66	18.7	5.5	1.38	.45	.57	.67	18.0	5.3	1.57	.46	.57	.68	17.1	5.0	1.80	.46	.58	.70
	600	285	21.8	6.4	1.22	.47	.61	.74	21.0	6.2	1.38	.48	.62	.76	20.0	5.9	1.57	.48	.63	.77	19.0	5.6	1.80	.49	.65	.80
	800	380	23.2	6.8	1.22	.50	.66	.82	22.2	6.5	1.38	.50	.68	.84	21.2	6.2	1.58	.51	.69	.86	20.2	5.9	1.80	.52	.71	.89
13ACC-018 - C23-26 TXV COOLING CAPACITY																										
63°F (17°C)	400	190	17.4	5.1	1.18	.71	.82	.92	16.8	4.9	1.35	.72	.83	.94	16.2	4.7	1.53	.73	.84	.95	15.5	4.5	1.75	.74	.86	.98
	600	285	19.5	5.7	1.19	.77	.91	1.00	18.8	5.5	1.35	.79	.93	1.00	18.0	5.3	1.54	.80	.95	1.00	17.2	5.0	1.76	.82	.97	1.00
	800	380	20.8	6.1	1.20	.84	.99	1.00	20.0	5.9	1.36	.86	1.00	1.00	19.2	5.6	1.55	.88	1.00	1.00	18.4	5.4	1.76	.90	1.00	1.00
67°F (19°C)	400	190	18.4	5.4	1.19	.58	.68	.78	17.7	5.2	1.35	.58	.69	.79	17.1	5.0	1.54	.59	.70	.81	16.4	4.8	1.75	.60	.71	.82
	600	285	20.6	6.0	1.20	.62	.75	.87	19.9	5.8	1.36	.63	.76	.89	19.0	5.6	1.54	.64	.78	.92	18.1	5.3	1.76	.65	.80	.94
	800	380	21.6	6.3	1.20	.66	.81	.95	21.0	6.2	1.36	.67	.83	.98	20.2	5.9	1.55	.68	.85	1.00	19.2	5.6	1.76	.70	.88	1.00
71°F (22°C)	400	190	19.2	5.6	1.19	.46	.56	.66	18.6	5.5	1.35	.46	.57	.67	17.9	5.2	1.54	.46	.57	.68	17.1	5.0	1.76	.47	.58	.69
	600	285	21.4	6.3	1.20	.48	.60	.73	20.8	6.1	1.36	.48	.61	.74	20.0	5.9	1.55	.48	.62	.75	19.1	5.6	1.76	.49	.63	.77
	800	380	22.6	6.6	1.20	.50	.65	.79	22.0	6.4	1.37	.50	.66	.81	21.2	6.2	1.55	.51	.67	.83	20.2	5.9	1.77	.51	.69	.85

NOTE - For Temperatures and Capacities not shown in tables, see bulletin - Cooling Unit Rating Table Correction Factor Data in Miscellaneous Engineering Data section.

Entering Wet Bulb Temperature	Total Air Volume		Outdoor Air Temperature Entering Outdoor Coil																							
			85°F (29°C)						95°F (35°C)						105°F (41°C)						115°F (46°C)					
			Total Cooling Capacity		Comp Motor kW Input	Sensible To Total Ratio (S/T) Dry Bulb			Total Cooling Capacity		Comp Motor kW Input	Sensible To Total Ratio (S/T) Dry Bulb			Total Cooling Capacity		Comp Motor kW Input	Sensible To Total Ratio (S/T) Dry Bulb			Total Cooling Capacity		Comp Motor kW Input	Sensible To Total Ratio (S/T) Dry Bulb		
	cfm	L/s	kBtuh	kW		75°F 24°C	80°F 27°C	85°F 29°C	kBtuh	kW		75°F 24°C	80°F 27°C	85°F 29°C	kBtuh	kW		75°F 24°C	80°F 27°C	85°F 29°C	kBtuh	kW		75°F 24°C	80°F 27°C	85°F 29°C
13ACC-018 - C23-26 RFC COOLING CAPACITY																										
63°F (17°C)	400	190	17.9	5.2	1.21	.71	.82	.93	17.2	5.0	1.38	.72	.84	.94	16.6	4.9	1.57	.73	.85	.96	15.7	4.6	1.80	.75	.87	.99
	600	285	19.9	5.8	1.22	.78	.92	1.00	19.2	5.6	1.38	.80	.94	1.00	18.4	5.4	1.58	.81	.96	1.00	17.4	5.1	1.80	.83	.99	1.00
	800	380	21.2	6.2	1.22	.85	1.00	1.00	20.4	6.0	1.38	.87	1.00	1.00	19.7	5.8	1.58	.89	1.00	1.00	18.8	5.5	1.80	.92	1.00	1.00
67°F (19°C)	400	190	18.8	5.5	1.21	.58	.69	.79	18.2	5.3	1.38	.59	.70	.80	17.5	5.1	1.57	.59	.71	.82	16.6	4.9	1.80	.60	.72	.83
	600	285	21.0	6.2	1.21	.62	.76	.89	20.4	6.0	1.38	.63	.77	.90	19.5	5.7	1.57	.64	.79	.93	18.5	5.4	1.80	.65	.81	.95
	800	380	22.4	6.6	1.22	.67	.83	.97	21.6	6.3	1.38	.68	.84	.99	20.6	6.0	1.58	.69	.86	1.00	19.5	5.7	1.80	.71	.89	1.00
71°F (22°C)	400	190	19.7	5.8	1.22	.46	.56	.66	19.1	5.6	1.38	.46	.57	.67	18.3	5.4	1.57	.46	.57	.68	17.4	5.1	1.80	.46	.58	.69
	600	285	22.2	6.5	1.22	.48	.61	.73	21.4	6.3	1.38	.48	.62	.75	20.4	6.0	1.57	.49	.63	.76	19.5	5.7	1.80	.49	.64	.78
	800	380	23.6	6.9	1.22	.50	.65	.80	22.6	6.6	1.39	.50	.66	.82	21.8	6.4	1.58	.51	.68	.84	20.6	6.0	1.80	.52	.70	.87
13ACC-018 - C33-24A/B/C TXV COOLING CAPACITY																										
63°F (17°C)	400	190	17.9	5.2	1.19	.71	.81	.92	17.3	5.1	1.35	.71	.83	.93	16.7	4.9	1.53	.72	.84	.95	15.9	4.7	1.75	.73	.86	.97
	600	285	19.9	5.8	1.19	.77	.91	1.00	19.3	5.7	1.36	.79	.93	1.00	18.5	5.4	1.54	.80	.95	1.00	17.7	5.2	1.76	.82	.97	1.00
	800	380	21.2	6.2	1.20	.83	.98	1.00	20.6	6.0	1.36	.85	1.00	1.00	19.8	5.8	1.54	.88	1.00	1.00	19.0	5.6	1.76	.90	1.00	1.00
67°F (19°C)	400	190	18.8	5.5	1.19	.58	.68	.78	18.2	5.3	1.35	.58	.69	.79	17.5	5.1	1.54	.58	.70	.80	16.8	4.9	1.76	.59	.71	.82
	600	285	20.8	6.1	1.20	.62	.75	.87	20.2	5.9	1.36	.63	.76	.89	19.6	5.7	1.55	.63	.77	.91	18.7	5.5	1.76	.64	.79	.94
	800	380	22.0	6.4	1.20	.65	.80	.95	21.4	6.3	1.37	.67	.83	.97	20.6	6.0	1.55	.68	.85	1.00	19.7	5.8	1.77	.70	.88	1.00
71°F (22°C)	400	190	19.5	5.7	1.19	.46	.56	.66	19.0	5.6	1.36	.46	.56	.66	18.4	5.4	1.54	.46	.57	.67	17.6	5.2	1.76	.46	.57	.68
	600	285	21.8	6.4	1.20	.48	.60	.72	21.2	6.2	1.36	.48	.61	.74	20.4	6.0	1.55	.48	.62	.75	19.7	5.8	1.77	.48	.63	.77
	800	380	22.8	6.7	1.20	.50	.64	.78	22.4	6.6	1.37	.50	.65	.80	21.6	6.3	1.56	.51	.67	.82	20.8	6.1	1.77	.51	.69	.85
13ACC-018 - C33-24A/B/C RFC COOLING CAPACITY																										
63°F (17°C)	400	190	18.3	5.4	1.22	.71	.82	.93	17.7	5.2	1.38	.72	.83	.94	17.0	5.0	1.57	.73	.85	.96	16.1	4.7	1.80	.74	.87	.98
	600	285	20.6	6.0	1.21	.78	.92	1.00	19.7	5.8	1.38	.79	.94	1.00	18.9	5.5	1.57	.81	.96	1.00	17.9	5.2	1.80	.83	.99	1.00
	800	380	21.8	6.4	1.21	.85	1.00	1.00	21.0	6.2	1.38	.87	1.00	1.00	20.2	5.9	1.58	.89	1.00	1.00	19.3	5.7	1.80	.92	1.00	1.00
67°F (19°C)	400	190	19.3	5.7	1.21	.57	.68	.78	18.6	5.5	1.38	.58	.69	.79	17.9	5.2	1.57	.58	.70	.81	17.0	5.0	1.80	.59	.71	.83
	600	285	21.8	6.4	1.21	.62	.75	.88	20.8	6.1	1.38	.63	.77	.90	20.0	5.9	1.57	.64	.78	.92	18.9	5.5	1.80	.65	.80	.95
	800	380	23.2	6.8	1.22	.66	.82	.97	22.2	6.5	1.38	.67	.84	.99	21.2	6.2	1.58	.69	.86	1.00	20.0	5.9	1.80	.70	.89	1.00
71°F (22°C)	400	190	20.2	5.9	1.21	.45	.56	.65	19.5	5.7	1.38	.45	.56	.66	18.8	5.5	1.57	.46	.57	.67	17.9	5.2	1.80	.46	.58	.69
	600	285	22.8	6.7	1.22	.47	.60	.73	22.0	6.4	1.38	.47	.61	.74	21.0	6.2	1.58	.48	.62	.76	19.9	5.8	1.80	.48	.63	.78
	800	380	24.4	7.2	1.22	.49	.65	.80	23.4	6.9	1.38	.50	.66	.82	22.4	6.6	1.58	.50	.67	.84	21.2	6.2	1.80	.51	.69	.86
13ACC-018 - C26-26 TXV COOLING CAPACITY																										
63°F (17°C)	400	190	17.7	5.2	1.19	.71	.82	.93	17.1	5.0	1.35	.72	.84	.94	16.5	4.8	1.53	.73	.85	.96	15.7	4.6	1.75	.74	.87	.98
	600	285	19.9	5.8	1.19	.78	.92	1.00	19.2	5.6	1.36	.80	.94	1.00	18.4	5.4	1.54	.81	.96	1.00	17.6	5.2	1.76	.83	.98	1.00
	800	380	21.4	6.3	1.20	.85	.99	1.00	20.6	6.0	1.36	.87	1.00	1.00	19.8	5.8	1.55	.90	1.00	1.00	18.9	5.5	1.76	.92	1.00	1.00
67°F (19°C)	400	190	18.6	5.5	1.19	.58	.69	.79	18.0	5.3	1.35	.59	.70	.80	17.3	5.1	1.54	.59	.71	.81	16.6	4.9	1.76	.60	.72	.83
	600	285	21.0	6.2	1.20	.62	.76	.89	20.2	5.9	1.36	.63	.77	.91	19.4	5.7	1.55	.64	.79	.93	18.4	5.4	1.76	.66	.81	.95
	800	380	22.2	6.5	1.20	.67	.83	.97	21.4	6.3	1.37	.68	.85	.99	20.6	6.0	1.55	.69	.87	1.00	19.5	5.7	1.77	.71	.90	1.00
71°F (22°C)	400	190	19.5	5.7	1.19	.46	.56	.66	18.8	5.5	1.35	.46	.57	.67	18.1	5.3	1.54	.46	.58	.68	17.3	5.1	1.76	.47	.58	.69
	600	285	21.8	6.4	1.20	.48	.61	.73	21.2	6.2	1.37	.48	.62	.75	20.4	6.0	1.55	.49	.63	.76	19.4	5.7	1.77	.49	.64	.78
	800	380	23.2	6.8	1.21	.50	.66	.80	22.4	6.6	1.37	.51	.67	.82	21.6	6.3	1.56	.51	.68	.85	20.6	6.0	1.77	.52	.70	.87
13ACC-018 - C26-26 RFC COOLING CAPACITY																										
63°F (17°C)	400	190	18.1	5.3	1.22	.72	.83	.93	17.5	5.1	1.38	.73	.84	.95	16.8	4.9	1.57	.74	.86	.97	16.0	4.7	1.80	.75	.88	.99
	600	285	20.4	6.0	1.22	.79	.93	1.00	19.6	5.7	1.38	.80	.95	1.00	18.8	5.5	1.57	.82	.97	1.00	17.8	5.2	1.80	.84	.99	1.00
	800	380	21.8	6.4	1.22	.86	1.00	1.00	21.0	6.2	1.38	.89	1.00	1.00	20.2	5.9	1.57	.91	1.00	1.00	19.3	5.7	1.80	.93	1.00	1.00
67°F (19°C)	400	190	19.1	5.6	1.21	.58	.69	.79	18.4	5.4	1.38	.59	.70	.81	17.7	5.2	1.57	.59	.71	.82	16.9	5.0	1.80	.60	.72	.84
	600	285	21.4	6.3	1.22	.63	.76	.90	20.6	6.0	1.38	.64	.78	.92	19.8	5.8	1.57	.65	.80	.94	18.8	5.5	1.80	.66	.82	.96
	800	380	22.8	6.7	1.22	.68	.84	.98	22.0	6.4	1.39	.69	.86	1.00	21.0	6.2	1.58	.70	.88	1.00	19.9	5.8	1.80	.72	.91	1.00
71°F (22°C)	400	190	20.0	5.9	1.21	.46	.57	.67	19.3	5.7	1.38	.46	.57	.67	18.6	5.5	1.57	.46	.58	.68	17.7	5.2	1.80	.46	.58	.70
	600	285	22.6	6.6	1.22	.48	.61	.74	21.6	6.3	1.38	.48	.62	.75	20.8	6.1	1.58	.49	.63	.77	19.8	5.8	1.80	.49	.65	.79
	800	380	24.0	7.0	1.22	.50	.66	.82	23.0	6.7	1.39	.51	.68	.84	22.0	6.4	1.58	.51	.69	.86	21.0	6.2	1.80	.52	.71	.89
13ACC-018 - C33-30A/B/C TXV COOLING CAPACITY																										
63°F (17°C)	400	190	18.1	5.3	1.19	.71	.82	.92	17.6	5.2	1.35	.71	.83	.94	16.9	5.0	1.54	.72	.84	.96	16.1	4.7	1.76	.74	.86	.98
	600	285	20.2	5.9	1.19	.78	.91	1.00	19.6	5.7	1.36	.79	.93	1.00	18.8	5.5	1.54	.81	.96	1.00	17.9	5.2	1.76	.83	.98	1.00
	800	380	21.6	6.3	1.20	.84	.99	1.00	20.8	6.1	1.36	.86	1.00	1.00	20.2	5.9	1.55	.89	1.00	1.00	19.4	5.7	1.76	.91	1.00	1.00
67°F (19°C)	400	190	19.0	5.6	1.19	.58	.68	.78	18.4	5.4	1.35	.58	.69	.79	17.7	5.2	1.54	.58	.70	.81	16.9	5.0	1.75	.59	.71	.82
	600	285	21.2	6.2	1.20	.62	.75	.88	20.6	6.0	1.36	.63	.77	.90	19.9	5.8	1.55	.64	.78	.92	18.9	5.5	1.76	.65	.80	.95
	800	380	22.4	6.6	1.20	.66	.82	.96	21.8	6.4	1.37	.67	.84	.99	21.0	6.2	1.55	.69	.86	1.00	20.0	5.9	1.77	.70	.89	1.00
71°F (22°C)	400	190	19.8	5.8	1.19	.46	.56	.66	19.2	5.6	1.36	.46	.56	.67	18.6	5.5	1.54	.46	.57	.67	17.7	5.2	1.76	.46	.57	.68
	600	285	22.2	6.5	1.20	.48	.61	.73	21.4	6.3	1.36	.48	.61	.74	20.8	6.1	1.55	.49	.62	.76	19.9	5.8	1.77	.49	.63	.77
	800	380	23.4	6.9	1.21	.50	.65	.79	22.8	6.7	1.37	.50	.66	.81	22.0	6.4	1.56	.51	.67	.83	21.0	6.2	1.77	.52	.69	.86
13ACC-018 - C33-30A/B/C RFC COOLING CAPACITY																										
63°F (17°C)	400	190	18.6	5.5	1.22	.71	.82	.93	17.9	5.2	1.38	.72	.83	.94	17.2	5.0	1.57	.73	.85	.97	16.3	4.8	1.80	.74	.87	.99
	600	285	20.8	6.1	1.21	.78	.93	1.00	20.0	5.9	1.38	.80	.95	1.00	19.1	5.6	1.57	.81	.97	1.00	18.1	5.3	1.79	.84	.99	1.00
	800	380	22.2	6.5	1.22	.86	1.00	1.00	21.4	6.3	1.39	.88	1.00	1.00	20.6	6.0	1.58	.90	1.00	1.00	19.7	5.8	1.80	.93	1.00	1.00
67°F (19°C)	400	190	19.5	5.7	1.21	.57	.68	.78	18.8	5.5	1.38	.58	.69	.80	18.1	5.3	1.57	.59	.70	.81	17.2	5.0	1.80	.59	.72	.83
	600	285	22.0	6.4	1.22	.62	.76	.89	21.2	6.2	1.38	.63	.77	.91	20.2	5.9	1.58	.64	.79	.93	19.2	5.6	1.80	.65	.81	.96
	800	380	23.4	6.9	1.22	.67	.83	.98	22.4	6.6	1.38	.68	.85	1.00	21.4	6.3	1.58	.69	.87	1.00	20.2	5.9	1.80	.71	.90	1.00
71°F (22°C)	400	190	20.4	6.0	1.21	.45	.56	.66	19.7	5.8	1.38	.45	.56	.66	18.9	5.5	1.57	.46	.57	.67	18.1	5.3	1.80	.46	.58	.69
	600	285	23.0	6.7	1.22	.47	.61	.73	22.2	6.5	1.39	.48	.61	.75	21.2	6.2	1.57	.48	.62	.76	20.2	5.9	1.80	.49	.64	.78
	800	380	24.6	7.2	1.22	.50	.65	.81	23.6	6.9	1.39	.50	.67	.83	22.6	6.6	1.58	.51	.68	.85	21.4	6.3	1.80	.51	.70	.88

NOTE - For Temperatures and Capacities not shown in tables, see bulletin - Cooling Unit Rating Table Correction Factor Data in Miscellaneous Engineering Data section.

Entering Wet Bulb Temperature	Total Air Volume		Outdoor Air Temperature Entering Outdoor Coil																							
			85°F (29°C)						95°F (35°C)						105°F (41°C)						115°F (46°C)					
			Total Cooling Capacity		Comp Motor kW Input	Sensible To Total Ratio (S/T) Dry Bulb			Total Cooling Capacity		Comp Motor kW Input	Sensible To Total Ratio (S/T) Dry Bulb			Total Cooling Capacity		Comp Motor kW Input	Sensible To Total Ratio (S/T) Dry Bulb			Total Cooling Capacity		Comp Motor kW Input	Sensible To Total Ratio (S/T) Dry Bulb		
	cfm	L/s	kBtuh	kW		75°F 24°C	80°F 27°C	85°F 29°C	kBtuh	kW		75°F 24°C	80°F 27°C	85°F 29°C	kBtuh	kW		75°F 24°C	80°F 27°C	85°F 29°C	kBtuh	kW		75°F 24°C	80°F 27°C	85°F 29°C
13ACC-018 - C33-36A/B/C TXV COOLING CAPACITY																										
63°F (17°C)	400	190	18.2	5.3	1.19	.71	.82	.92	17.6	5.2	1.35	.72	.83	.94	16.9	5.0	1.54	.73	.85	.96	16.1	4.7	1.75	.74	.86	.98
	600	285	20.4	6.0	1.20	.78	.92	1.00	19.7	5.8	1.36	.80	.94	1.00	18.9	5.5	1.54	.81	.96	1.00	18.0	5.3	1.76	.83	.99	1.00
	800	380	21.8	6.4	1.20	.85	1.00	1.00	21.2	6.2	1.36	.87	1.00	1.00	20.4	6.0	1.55	.89	1.00	1.00	19.5	5.7	1.77	.92	1.00	1.00
67°F (19°C)	400	190	19.1	5.6	1.19	.58	.69	.79	18.4	5.4	1.35	.58	.69	.80	17.8	5.2	1.54	.59	.70	.81	17.0	5.0	1.75	.60	.72	.83
	600	285	21.4	6.3	1.20	.62	.76	.88	20.8	6.1	1.36	.63	.77	.90	19.9	5.8	1.55	.64	.79	.93	18.9	5.5	1.76	.65	.81	.95
	800	380	22.8	6.7	1.20	.67	.82	.97	22.0	6.4	1.37	.68	.85	.99	21.2	6.2	1.55	.69	.87	1.00	20.0	5.9	1.77	.71	.90	1.00
71°F (22°C)	400	190	19.9	5.8	1.19	.46	.56	.66	19.3	5.7	1.36	.46	.57	.67	18.6	5.5	1.54	.46	.57	.68	17.7	5.2	1.76	.46	.58	.69
	600	285	22.4	6.6	1.20	.48	.61	.73	21.6	6.3	1.36	.48	.62	.75	21.0	6.2	1.55	.49	.63	.76	19.9	5.8	1.77	.49	.64	.78
	800	380	23.6	6.9	1.21	.50	.65	.80	23.0	6.7	1.37	.51	.67	.82	22.2	6.5	1.56	.51	.68	.84	21.2	6.2	1.77	.52	.70	.87
13ACC-018 - C33-36A/B/C RFC COOLING CAPACITY																										
63°F (17°C)	400	190	18.6	5.5	1.21	.71	.82	.93	17.9	5.2	1.38	.72	.84	.95	17.2	5.0	1.57	.73	.85	.97	16.3	4.8	1.80	.75	.87	.99
	600	285	20.8	6.1	1.22	.79	.93	1.00	20.0	5.9	1.38	.80	.95	1.00	19.2	5.6	1.57	.82	.97	1.00	18.2	5.3	1.80	.84	1.00	1.00
	800	380	22.4	6.6	1.22	.86	1.00	1.00	21.6	6.3	1.39	.88	1.00	1.00	20.8	6.1	1.58	.91	1.00	1.00	19.8	5.8	1.80	.93	1.00	1.00
67°F (19°C)	400	190	19.5	5.7	1.21	.58	.69	.79	18.8	5.5	1.38	.59	.70	.80	18.1	5.3	1.57	.59	.71	.82	17.2	5.0	1.80	.60	.72	.84
	600	285	22.0	6.4	1.22	.63	.76	.89	21.2	6.2	1.38	.64	.78	.92	20.2	5.9	1.57	.65	.79	.94	19.2	5.6	1.80	.66	.82	.97
	800	380	23.6	6.9	1.22	.67	.84	.99	22.6	6.6	1.38	.69	.86	1.00	21.6	6.3	1.57	.70	.88	1.00	20.4	6.0	1.80	.72	.91	1.00
71°F (22°C)	400	190	20.4	6.0	1.21	.46	.56	.66	19.7	5.8	1.38	.46	.57	.67	18.9	5.5	1.57	.46	.58	.68	18.1	5.3	1.80	.46	.58	.70
	600	285	23.2	6.8	1.22	.48	.61	.74	22.2	6.5	1.38	.48	.62	.75	21.4	6.3	1.58	.49	.63	.77	20.2	5.9	1.80	.49	.65	.79
	800	380	24.8	7.3	1.22	.50	.66	.81	23.8	7.0	1.39	.51	.67	.83	22.6	6.6	1.58	.51	.69	.86	21.4	6.3	1.80	.52	.71	.88
13ACC-018 - CR26-18N-F TXV COOLING CAPACITY																										
63°F (17°C)	400	190	17.0	5.0	1.19	.71	.82	.92	16.4	4.8	1.34	.72	.83	.94	15.7	4.6	1.53	.73	.85	.96	15.0	4.4	1.75	.74	.87	.98
	600	285	18.9	5.5	1.19	.78	.91	1.00	18.2	5.3	1.35	.79	.93	1.00	17.5	5.1	1.53	.81	.95	1.00	16.6	4.9	1.75	.83	.97	1.00
	800	380	20.0	5.9	1.19	.84	.98	1.00	19.4	5.7	1.35	.86	.99	1.00	18.6	5.5	1.54	.88	1.00	1.00	17.7	5.2	1.76	.91	1.00	1.00
67°F (19°C)	400	190	17.8	5.2	1.19	.58	.68	.78	17.3	5.1	1.35	.58	.69	.80	16.6	4.9	1.53	.58	.70	.81	15.8	4.6	1.75	.59	.71	.83
	600	285	19.9	5.8	1.19	.62	.75	.88	19.2	5.6	1.36	.63	.76	.90	18.5	5.4	1.54	.63	.78	.92	17.5	5.1	1.76	.65	.80	.94
	800	380	21.0	6.2	1.20	.66	.82	.95	20.4	6.0	1.36	.67	.83	.97	19.5	5.7	1.54	.68	.85	.99	18.5	5.4	1.76	.70	.88	1.00
71°F (22°C)	400	190	18.7	5.5	1.19	.46	.56	.66	18.1	5.3	1.35	.45	.56	.66	17.4	5.1	1.54	.46	.57	.67	16.6	4.9	1.75	.46	.58	.69
	600	285	20.8	6.1	1.20	.48	.61	.73	20.2	5.9	1.36	.48	.61	.74	19.4	5.7	1.55	.48	.62	.75	18.5	5.4	1.76	.48	.63	.77
	800	380	22.0	6.4	1.20	.50	.65	.79	21.4	6.3	1.36	.50	.66	.81	20.6	6.0	1.55	.51	.67	.83	19.5	5.7	1.77	.51	.69	.85
13ACC-018 - CR26-18N-F RFC COOLING CAPACITY																										
63°F (17°C)	400	190	17.3	5.1	1.21	.71	.82	.93	16.6	4.9	1.38	.72	.84	.95	16.0	4.7	1.58	.73	.85	.97	15.1	4.4	1.80	.75	.88	.99
	600	285	19.3	5.7	1.21	.78	.92	1.00	18.5	5.4	1.38	.80	.94	1.00	17.7	5.2	1.57	.81	.96	1.00	16.7	4.9	1.80	.84	.98	1.00
	800	380	20.6	6.0	1.21	.85	.99	1.00	19.7	5.8	1.38	.87	1.00	1.00	18.9	5.5	1.57	.89	1.00	1.00	18.0	5.3	1.80	.92	1.00	1.00
67°F (19°C)	400	190	18.2	5.3	1.22	.58	.68	.79	17.6	5.2	1.38	.58	.69	.80	16.9	5.0	1.57	.59	.71	.82	16.0	4.7	1.80	.60	.72	.84
	600	285	20.4	6.0	1.21	.62	.76	.89	19.6	5.7	1.38	.63	.77	.91	18.7	5.5	1.58	.64	.79	.93	17.8	5.2	1.80	.65	.81	.95
	800	380	21.6	6.3	1.22	.66	.83	.97	20.8	6.1	1.38	.67	.85	.98	19.8	5.8	1.57	.69	.87	.99	18.7	5.5	1.80	.71	.89	1.00
71°F (22°C)	400	190	19.1	5.6	1.22	.45	.56	.66	18.4	5.4	1.38	.45	.56	.67	17.7	5.2	1.57	.46	.57	.68	16.8	4.9	1.80	.46	.58	.69
	600	285	21.4	6.3	1.22	.47	.60	.73	20.6	6.0	1.38	.48	.61	.74	19.7	5.8	1.57	.48	.62	.76	18.7	5.5	1.80	.49	.64	.78
	800	380	22.8	6.7	1.22	.49	.65	.80	21.8	6.4	1.39	.50	.66	.82	21.0	6.2	1.58	.50	.68	.84	19.8	5.8	1.80	.51	.69	.87
13ACC-018 - CH33-18A-2F TXV COOLING CAPACITY																										
63°F (17°C)	400	190	16.9	5.0	1.18	.70	.81	.92	16.3	4.8	1.35	.71	.82	.93	15.7	4.6	1.53	.72	.84	.95	15.0	4.4	1.75	.73	.86	.98
	600	285	18.6	5.5	1.19	.77	.90	1.00	18.1	5.3	1.35	.78	.92	1.00	17.3	5.1	1.54	.79	.94	1.00	16.5	4.8	1.75	.81	.97	1.00
	800	380	19.6	5.7	1.19	.82	.98	1.00	19.0	5.6	1.35	.84	1.00	1.00	18.3	5.4	1.54	.86	1.00	1.00	17.5	5.1	1.76	.89	1.00	1.00
67°F (19°C)	400	190	17.7	5.2	1.18	.57	.68	.78	17.2	5.0	1.35	.58	.68	.79	16.6	4.9	1.53	.58	.69	.80	15.8	4.6	1.75	.59	.71	.82
	600	285	19.6	5.7	1.19	.61	.74	.86	19.0	5.6	1.36	.62	.75	.88	18.4	5.4	1.54	.63	.77	.91	17.5	5.1	1.76	.64	.79	.93
	800	380	20.6	6.0	1.20	.65	.80	.94	20.0	5.9	1.36	.66	.82	.97	19.3	5.7	1.54	.67	.84	.99	18.4	5.4	1.76	.68	.86	1.00
71°F (22°C)	400	190	18.5	5.4	1.19	.46	.56	.65	18.0	5.3	1.35	.45	.56	.66	17.4	5.1	1.54	.45	.56	.67	16.6	4.9	1.75	.46	.57	.68
	600	285	20.4	6.0	1.20	.48	.60	.72	19.9	5.8	1.36	.48	.60	.73	19.3	5.7	1.54	.48	.61	.74	18.4	5.4	1.76	.48	.62	.76
	800	380	21.6	6.3	1.20	.49	.64	.77	21.0	6.2	1.36	.50	.65	.79	20.2	5.9	1.55	.50	.66	.81	19.4	5.7	1.77	.50	.67	.84
13ACC-018 - CH33-18A-2F RFC COOLING CAPACITY																										
63°F (17°C)	400	190	17.3	5.1	1.21	.71	.82	.93	16.6	4.9	1.38	.72	.83	.94	15.9	4.7	1.58	.73	.85	.96	15.1	4.4	1.80	.74	.87	.99
	600	285	19.2	5.6	1.22	.77	.91	1.00	18.4	5.4	1.38	.79	.93	1.00	17.6	5.2	1.57	.80	.95	1.00	16.6	4.9	1.80	.82	.98	1.00
	800	380	20.2	5.9	1.21	.84	1.00	1.00	19.4	5.7	1.38	.85	1.00	1.00	18.6	5.5	1.57	.87	1.00	1.00	17.7	5.2	1.80	.90	1.00	1.00
67°F (19°C)	400	190	18.2	5.3	1.21	.57	.68	.78	17.6	5.2	1.38	.58	.69	.79	16.8	4.9	1.57	.59	.70	.81	16.0	4.7	1.80	.59	.71	.83
	600	285	20.2	5.9	1.22	.61	.75	.88	19.5	5.7	1.38	.62	.76	.90	18.7	5.5	1.58	.63	.78	.92	17.7	5.2	1.80	.64	.80	.94
	800	380	21.6	6.3	1.22	.65	.81	.96	20.6	6.0	1.38	.66	.83	.99	19.7	5.8	1.57	.68	.85	1.00	18.6	5.5	1.80	.69	.88	1.00
71°F (22°C)	400	190	19.1	5.6	1.21	.45	.55	.65	18.4	5.4	1.38	.45	.56	.66	17.7	5.2	1.57	.46	.57	.67	16.9	5.0	1.80	.46	.58	.69
	600	285	21.4	6.3	1.22	.47	.60	.72	20.6	6.0	1.38	.47	.61	.73	19.7	5.8	1.57	.48	.62	.75	18.6	5.5	1.80	.48	.63	.77
	800	380	22.6	6.6	1.22	.49	.64	.79	21.8	6.4	1.38	.49	.65	.80	20.8	6.1	1.57	.50	.66	.82	19.7	5.8	1.80	.51	.68	.85
13ACC-018 - CH23-21 TXV COOLING CAPACITY																										
63°F (17°C)	400	190	17.0	5.0	1.18	.70	.81	.90	16.6	4.9	1.35	.71	.82	.92	16.1	4.7	1.53	.72	.83	.94	15.5	4.5	1.75	.73	.85	.96
	600	285	18.9	5.5	1.19	.76	.88	.99	18.4	5.4	1.35	.77	.91	1.00	17.8	5.2	1.54	.79	.93	1.00	17.0	5.0	1.75	.81	.96	1.00
	800	380	20.2	5.9	1.20	.81	.96	1.00	19.6	5.7	1.36	.83	.98	1.00	19.1	5.6	1.54	.85	.99	1.00	18.3	5.4	1.76	.88	1.00	1.00
67°F (19°C)	400	190	18.0	5.3	1.19	.58	.68	.77	17.5	5.1	1.35	.58	.69	.78	17.0	5.0	1.54	.59	.69	.80	16.4	4.8	1.75	.59	.71	.81
	600	285	20.2	5.9	1.19	.61	.73	.85	19.5	5.7	1.36	.62	.75	.87	18.9	5.5	1.54	.63	.76	.89	18.1	5.3	1.76	.64	.78	.92
	800	380	21.2	6.2	1.20	.64	.78	.92	20.6	6.0	1.36	.65	.80	.95	19.9	5.8	1.55	.67	.83	.97	19.1	5.6	1.77	.68	.85	.99
71°F (22°C)	400	190	18.9	5.5	1.19	.46	.56	.65	18.4	5.4	1.35	.45	.57	.66	17.8	5.2	1.54	.46	.56	.67	17.2	5.0	1.76	.45	.58	.68
	600	285	21.2	6.2	1.20	.47	.59	.71	20.6	6.0	1.36	.48	.61	.72	19.9	5.8	1.55	.47	.61	.74	19.1	5.6	1.76	.48	.62	.75
	800	380	22.2	6.5	1.20	.49	.63	.76	21.8	6.4	1.37	.49	.64	.78	21.2	6.2	1.55	.50	.65	.80	20.2	5.9	1.77	.50	.67	.82

NOTE - For Temperatures and Capacities not shown in tables, see bulletin - Cooling Unit Rating Table Correction Factor Data in Miscellaneous Engineering Data section.

Entering Wet Bulb Temperature	Total Air Volume		Outdoor Air Temperature Entering Outdoor Coil																							
			85°F (29°C)						95°F (35°C)						105°F (41°C)						115°F (46°C)					
			Total Cooling Capacity		Comp Motor kW Input	Sensible To Total Ratio (S/T) Dry Bulb			Total Cooling Capacity		Comp Motor kW Input	Sensible To Total Ratio (S/T) Dry Bulb			Total Cooling Capacity		Comp Motor kW Input	Sensible To Total Ratio (S/T) Dry Bulb			Total Cooling Capacity		Comp Motor kW Input	Sensible To Total Ratio (S/T) Dry Bulb		
	cfm	L/s	kBtuh	kW		75°F 24°C	80°F 27°C	85°F 29°C	kBtuh	kW		75°F 24°C	80°F 27°C	85°F 29°C	kBtuh	kW		75°F 24°C	80°F 27°C	85°F 29°C	kBtuh	kW		75°F 24°C	80°F 27°C	85°F 29°C
13ACC-018 - CH23-21 RFC COOLING CAPACITY																										
63°F (17°C)	400	190	17.8	5.2	1.22	.71	.81	.92	17.3	5.1	1.38	.71	.83	.93	16.7	4.9	1.57	.73	.84	.95	15.9	4.7	1.80	.74	.86	.98
	600	285	19.8	5.8	1.21	.77	.90	1.00	19.2	5.6	1.38	.78	.92	1.00	18.5	5.4	1.58	.80	.95	1.00	17.6	5.2	1.80	.82	.97	1.00
	800	380	21.0	6.2	1.22	.83	.98	1.00	20.4	6.0	1.38	.85	1.00	1.00	19.8	5.8	1.57	.87	1.00	1.00	19.0	5.6	1.80	.90	1.00	1.00
67°F (19°C)	400	190	18.8	5.5	1.22	.58	.68	.78	18.3	5.4	1.38	.58	.69	.79	17.6	5.2	1.57	.59	.70	.80	16.8	4.9	1.80	.59	.71	.82
	600	285	21.0	6.2	1.21	.62	.74	.86	20.4	6.0	1.38	.62	.76	.88	19.6	5.7	1.57	.63	.77	.91	18.7	5.5	1.80	.64	.79	.94
	800	380	22.2	6.5	1.22	.65	.80	.95	21.6	6.3	1.38	.66	.82	.97	20.8	6.1	1.57	.68	.84	.99	19.7	5.8	1.80	.69	.87	1.00
71°F (22°C)	400	190	19.7	5.8	1.21	.45	.56	.65	19.1	5.6	1.38	.45	.56	.66	18.5	5.4	1.57	.46	.56	.67	17.6	5.2	1.80	.45	.58	.69
	600	285	22.0	6.4	1.22	.47	.60	.72	21.4	6.3	1.38	.47	.61	.73	20.6	6.0	1.57	.48	.62	.75	19.7	5.8	1.80	.49	.63	.77
	800	380	23.6	6.9	1.22	.49	.64	.78	22.8	6.7	1.39	.50	.65	.80	21.8	6.4	1.58	.50	.66	.82	20.8	6.1	1.80	.51	.68	.84
13ACC-018 - CH23-31 TXV COOLING CAPACITY																										
63°F (17°C)	400	190	17.2	5.0	1.19	.70	.81	.91	16.7	4.9	1.35	.72	.82	.92	16.2	4.7	1.53	.72	.84	.94	15.6	4.6	1.75	.73	.85	.97
	600	285	19.1	5.6	1.19	.76	.89	.99	18.6	5.5	1.35	.78	.91	1.00	17.9	5.2	1.54	.79	.93	1.00	17.2	5.0	1.76	.81	.96	1.00
	800	380	20.4	6.0	1.20	.81	.96	1.00	19.9	5.8	1.36	.83	.98	1.00	19.3	5.7	1.55	.86	1.00	1.00	18.6	5.5	1.76	.89	1.00	1.00
67°F (19°C)	400	190	18.1	5.3	1.19	.58	.68	.77	17.7	5.2	1.35	.58	.69	.79	17.1	5.0	1.54	.58	.70	.80	16.5	4.8	1.75	.59	.71	.82
	600	285	20.4	6.0	1.20	.61	.74	.85	19.7	5.8	1.36	.62	.75	.87	19.0	5.6	1.54	.63	.77	.90	18.2	5.3	1.76	.64	.79	.92
	800	380	21.6	6.3	1.20	.65	.79	.93	20.8	6.1	1.36	.66	.81	.96	20.2	5.9	1.55	.67	.83	.98	19.2	5.6	1.77	.69	.86	1.00
71°F (22°C)	400	190	19.0	5.6	1.19	.46	.56	.66	18.5	5.4	1.36	.44	.57	.66	18.0	5.3	1.54	.46	.56	.67	17.3	5.1	1.76	.46	.58	.68
	600	285	21.4	6.3	1.20	.46	.60	.71	20.8	6.1	1.36	.48	.60	.73	20.0	5.9	1.55	.48	.62	.74	19.2	5.6	1.76	.49	.63	.76
	800	380	22.6	6.6	1.20	.50	.63	.76	22.0	6.4	1.37	.49	.64	.78	21.4	6.3	1.55	.50	.66	.81	20.4	6.0	1.77	.51	.68	.83
13ACC-018 - CH23-31 RFC COOLING CAPACITY																										
63°F (17°C)	400	190	17.9	5.2	1.22	.71	.82	.92	17.4	5.1	1.38	.72	.83	.94	16.8	4.9	1.57	.73	.84	.96	16.0	4.7	1.80	.74	.86	.98
	600	285	19.9	5.8	1.21	.77	.90	1.00	19.3	5.7	1.38	.79	.93	1.00	18.6	5.5	1.57	.80	.95	1.00	17.8	5.2	1.80	.83	.98	1.00
	800	380	21.2	6.2	1.21	.83	.98	1.00	20.6	6.0	1.38	.85	1.00	1.00	20.0	5.9	1.57	.88	1.00	1.00	19.2	5.6	1.80	.91	1.00	1.00
67°F (19°C)	400	190	18.9	5.5	1.21	.58	.68	.78	18.4	5.4	1.38	.58	.69	.79	17.7	5.2	1.57	.59	.70	.81	16.9	5.0	1.79	.59	.71	.83
	600	285	21.2	6.2	1.21	.61	.75	.87	20.6	6.0	1.38	.63	.76	.89	19.8	5.8	1.57	.63	.78	.91	18.8	5.5	1.80	.65	.80	.94
	800	380	22.4	6.6	1.22	.66	.81	.95	21.8	6.4	1.39	.67	.83	.98	20.8	6.1	1.58	.68	.85	1.00	19.9	5.8	1.80	.70	.88	1.00
71°F (22°C)	400	190	19.8	5.8	1.21	.45	.56	.66	19.3	5.7	1.38	.45	.56	.66	18.6	5.5	1.57	.46	.57	.67	17.8	5.2	1.80	.46	.58	.69
	600	285	22.2	6.5	1.22	.48	.60	.72	21.6	6.3	1.38	.48	.61	.73	20.8	6.1	1.57	.47	.62	.75	19.8	5.8	1.80	.49	.63	.77
	800	380	23.8	7.0	1.22	.48	.64	.78	23.0	6.7	1.39	.49	.65	.80	22.0	6.4	1.58	.50	.67	.82	21.0	6.2	1.80	.51	.69	.85
13ACC-018 - CH33-24/30A-2F TXV COOLING CAPACITY																										
63°F (17°C)	400	190	18.0	5.3	1.19	.70	.81	.92	17.5	5.1	1.35	.71	.83	.93	16.8	4.9	1.54	.72	.84	.95	16.0	4.7	1.75	.74	.86	.98
	600	285	20.0	5.9	1.19	.77	.91	1.00	19.5	5.7	1.36	.79	.93	1.00	18.7	5.5	1.54	.80	.95	1.00	17.8	5.2	1.76	.82	.98	1.00
	800	380	21.4	6.3	1.20	.84	.99	1.00	20.6	6.0	1.36	.86	1.00	1.00	20.0	5.9	1.55	.88	1.00	1.00	19.2	5.6	1.77	.91	1.00	1.00
67°F (19°C)	400	190	18.9	5.5	1.19	.57	.68	.78	18.4	5.4	1.35	.58	.69	.79	17.7	5.2	1.54	.58	.70	.80	16.9	5.0	1.76	.59	.71	.82
	600	285	21.0	6.2	1.20	.62	.75	.87	20.4	6.0	1.36	.62	.76	.89	19.8	5.8	1.55	.63	.78	.91	18.8	5.5	1.76	.64	.80	.94
	800	380	22.2	6.5	1.20	.66	.81	.95	21.6	6.3	1.37	.67	.83	.98	20.8	6.1	1.55	.68	.85	1.00	19.9	5.8	1.77	.70	.88	1.00
71°F (22°C)	400	190	19.7	5.8	1.19	.45	.56	.65	19.1	5.6	1.36	.45	.56	.66	18.5	5.4	1.54	.45	.56	.67	17.7	5.2	1.76	.46	.57	.68
	600	285	22.0	6.4	1.20	.48	.60	.72	21.4	6.3	1.36	.48	.61	.74	20.6	6.0	1.55	.48	.62	.75	19.8	5.8	1.77	.48	.63	.77
	800	380	23.0	6.7	1.20	.50	.64	.78	22.6	6.6	1.37	.50	.66	.81	21.8	6.4	1.56	.51	.67	.83	21.0	6.2	1.77	.51	.69	.85
13ACC-018 - CH33-24/30A-2F RFC COOLING CAPACITY																										
63°F (17°C)	400	190	18.5	5.4	1.22	.71	.82	.93	17.8	5.2	1.38	.72	.83	.94	17.1	5.0	1.57	.73	.85	.96	16.2	4.7	1.80	.74	.87	.99
	600	285	20.8	6.1	1.22	.78	.92	1.00	19.9	5.8	1.38	.79	.94	1.00	19.0	5.6	1.57	.81	.97	1.00	18.0	5.3	1.80	.83	.99	1.00
	800	380	22.0	6.4	1.22	.85	1.00	1.00	21.2	6.2	1.38	.87	1.00	1.00	20.4	6.0	1.57	.89	1.00	1.00	19.5	5.7	1.80	.92	1.00	1.00
67°F (19°C)	400	190	19.5	5.7	1.21	.57	.68	.78	18.8	5.5	1.38	.58	.69	.80	18.0	5.3	1.57	.59	.70	.81	17.1	5.0	1.80	.59	.71	.83
	600	285	22.0	6.4	1.22	.62	.75	.89	21.2	6.2	1.38	.63	.77	.91	20.2	5.9	1.58	.64	.78	.93	19.1	5.6	1.80	.65	.81	.96
	800	380	23.4	6.9	1.22	.66	.83	.98	22.4	6.6	1.38	.68	.85	1.00	21.4	6.3	1.57	.69	.87	1.00	20.2	5.9	1.80	.71	.90	1.00
71°F (22°C)	400	190	20.4	6.0	1.21	.45	.55	.65	19.7	5.8	1.38	.45	.56	.66	18.9	5.5	1.57	.46	.57	.67	18.0	5.3	1.80	.46	.58	.69
	600	285	23.0	6.7	1.22	.47	.60	.73	22.2	6.5	1.39	.47	.61	.74	21.2	6.2	1.58	.48	.62	.76	20.2	5.9	1.80	.49	.64	.78
	800	380	24.6	7.2	1.22	.49	.65	.80	23.6	6.9	1.39	.50	.66	.82	22.4	6.6	1.58	.50	.68	.84	21.4	6.3	1.80	.51	.69	.87
13ACC-018 - CH33-36A/B/C-2F TXV COOLING CAPACITY																										
63°F (17°C)	400	190	18.3	5.4	1.19	.70	.81	.91	17.7	5.2	1.35	.70	.82	.93	17.0	5.0	1.54	.71	.83	.95	16.2	4.7	1.76	.73	.85	.97
	600	285	20.4	6.0	1.20	.76	.90	1.00	19.6	5.7	1.36	.78	.92	1.00	18.8	5.5	1.54	.79	.95	1.00	17.8	5.2	1.76	.81	.98	1.00
	800	380	21.6	6.3	1.20	.83	.99	1.00	20.8	6.1	1.36	.85	1.00	1.00	20.0	5.9	1.55	.87	1.00	1.00	19.2	5.6	1.77	.90	1.00	1.00
67°F (19°C)	400	190	19.5	5.7	1.19	.57	.67	.77	18.8	5.5	1.35	.57	.68	.78	18.1	5.3	1.54	.58	.69	.79	17.3	5.1	1.76	.58	.70	.81
	600	285	21.6	6.3	1.20	.62	.74	.87	20.8	6.1	1.36	.62	.76	.89	20.0	5.9	1.55	.63	.77	.91	19.1	5.6	1.76	.64	.79	.94
	800	380	22.8	6.7	1.21	.64	.81	.96	22.0	6.4	1.37	.67	.83	.98	21.0	6.2	1.55	.68	.85	1.00	20.0	5.9	1.77	.69	.87	1.00
71°F (22°C)	400	190	20.6	6.0	1.20	.46	.55	.65	19.9	5.8	1.36	.45	.55	.65	19.2	5.6	1.55	.45	.56	.66	18.3	5.4	1.76	.45	.56	.67
	600	285	22.8	6.7	1.20	.48	.60	.72	22.0	6.4	1.37	.47	.60	.73	21.2	6.2	1.55	.48	.61	.74	20.2	5.9	1.77	.48	.62	.76
	800	380	23.8	7.0	1.21	.48	.64	.78	23.2	6.8	1.37	.50	.65	.80	22.2	6.5	1.56	.50	.66	.82	21.2	6.2	1.77	.51	.68	.84
13ACC-018 - CH33-36A/B/C-2F RFC COOLING CAPACITY																										
63°F (17°C)	400	190	18.7	5.5	1.21	.70	.81	.92	18.0	5.3	1.38	.71	.82	.94	17.3	5.1	1.58	.72	.84	.96	16.3	4.8	1.80	.73	.86	.98
	600	285	20.8	6.1	1.22	.77	.91	1.00	20.0	5.9	1.38	.79	.94	1.00	19.1	5.6	1.57	.80	.96	1.00	18.0	5.3	1.80	.82	.99	1.00
	800	380	22.2	6.5	1.22	.85	1.00	1.00	21.4	6.3	1.38	.86	1.00	1.00	20.4	6.0	1.58	.89	1.00	1.00	19.5	5.7	1.80	.91	1.00	1.00
67°F (19°C)	400	190	20.0	5.9	1.21	.57	.67	.77	19.2	5.6	1.38	.57	.68	.79	18.4	5.4	1.57	.58	.69	.80	17.5	5.1	1.80	.59	.71	.82
	600	285	22.2	6.5	1.21	.61	.74	.88	21.4	6.3	1.38	.62	.76	.90	20.4	6.0	1.58	.63	.78	.92	19.3	5.7	1.80	.64	.80	.95
	800	380	23.6	6.9	1.22	.66	.82	.98	22.6	6.6	1.38	.67	.84	1.00	21.6	6.3	1.58	.68	.86	1.00	20.4	6.0	1.80	.70	.89	1.00
71°F (22°C)	400	190	21.2	6.2	1.21	.45	.55	.64	20.4	6.0	1.38	.45	.55	.65	19.6	5.7	1.57	.45	.56	.66	18.6	5.5	1.80	.45	.57	.68
	600	285	23.6	6.9	1.22	.47	.59	.72	22.6	6.6	1.39	.47	.60	.73	21.8	6.4	1.58	.47	.61	.75	20.6	6.0	1.80	.48	.63	.77
	800	380	25.0	7.3	1.22	.49	.64	.79	24.0	7.0	1.39	.49	.65	.81	23.0	6.7	1.58	.50	.67	.83	21.6	6.3	1.80	.51	.69	.86

RATINGS — 1.5 TON

NOTE - For Temperatures and Capacities not shown in tables, see bulletin - Cooling Unit Rating Table Correction Factor Data in Miscellaneous Engineering Data section.

Entering Wet Bulb Temperature	Total Air Volume		Outdoor Air Temperature Entering Outdoor Coil																							
			85°F (29°C)						95°F (35°C)						105°F (41°C)						115°F (46°C)					
			Total Cooling Capacity		Comp Motor kW Input	Sensible To Total Ratio (S/T) Dry Bulb			Total Cooling Capacity		Comp Motor kW Input	Sensible To Total Ratio (S/T) Dry Bulb			Total Cooling Capacity		Comp Motor kW Input	Sensible To Total Ratio (S/T) Dry Bulb			Total Cooling Capacity		Comp Motor kW Input	Sensible To Total Ratio (S/T) Dry Bulb		
	cfm	L/s	kBtuh	kW		75°F 24°C	80°F 27°C	85°F 29°C	kBtuh	kW		75°F 24°C	80°F 27°C	85°F 29°C	kBtuh	kW		75°F 24°C	80°F 27°C	85°F 29°C	kBtuh	kW		75°F 24°C	80°F 27°C	85°F 29°C
13ACC-018 - CB28UH-018/024 - CB29M-21/26 TXV COOLING CAPACITY																										
63°F (17°C)	555	260	18.6	5.5	1.19	.75	.89	1.00	18.0	5.3	1.35	.76	.91	1.00	17.2	5.0	1.54	.78	.93	1.00	16.3	4.8	1.75	.80	.95	1.00
	690	325	19.5	5.7	1.19	.80	.95	1.00	18.8	5.5	1.36	.81	.97	1.00	18.0	5.3	1.54	.83	.99	1.00	17.1	5.0	1.76	.85	1.00	1.00
	790	375	20.0	5.9	1.19	.83	.98	1.00	19.3	5.7	1.36	.85	1.00	1.00	18.6	5.5	1.54	.87	1.00	1.00	17.8	5.2	1.76	.89	1.00	1.00
67°F (19°C)	555	260	19.6	5.7	1.19	.60	.73	.85	18.9	5.5	1.36	.60	.74	.87	18.2	5.3	1.54	.61	.75	.89	17.3	5.1	1.76	.62	.77	.91
	690	325	20.6	6.0	1.20	.63	.77	.91	19.8	5.8	1.36	.63	.79	.93	19.1	5.6	1.54	.64	.80	.96	18.1	5.3	1.76	.65	.83	.98
	790	375	21.0	6.2	1.20	.64	.81	.95	20.4	6.0	1.36	.66	.82	.97	19.5	5.7	1.54	.66	.84	.99	18.5	5.4	1.76	.68	.87	1.00
71°F (22°C)	555	260	20.4	6.0	1.20	.46	.58	.70	19.8	5.8	1.36	.46	.59	.72	19.1	5.6	1.54	.45	.59	.73	18.2	5.3	1.76	.46	.60	.74
	690	325	21.4	6.3	1.20	.47	.61	.75	20.8	6.1	1.36	.47	.62	.76	20.0	5.9	1.55	.47	.63	.78	19.0	5.6	1.76	.47	.64	.80
	790	375	22.0	6.4	1.20	.48	.63	.78	21.2	6.2	1.36	.48	.64	.80	20.4	6.0	1.55	.48	.66	.82	19.5	5.7	1.77	.48	.67	.84
13ACC-018 - CB30M-21/26 - CB30U-21/26 TXV COOLING CAPACITY																										
63°F (17°C)	535	255	19.8	5.8	1.19	.73	.87	.99	19.0	5.6	1.35	.75	.89	1.00	18.3	5.4	1.54	.76	.91	1.00	17.3	5.1	1.76	.78	.93	1.00
	685	325	21.0	6.2	1.20	.79	.94	1.00	20.2	5.9	1.36	.80	.96	1.00	19.3	5.7	1.55	.82	.98	1.00	18.3	5.4	1.76	.85	1.00	1.00
	780	370	21.6	6.3	1.20	.82	.98	1.00	20.8	6.1	1.36	.84	1.00	1.00	19.9	5.8	1.55	.86	1.00	1.00	19.0	5.6	1.76	.89	1.00	1.00
67°F (19°C)	535	255	21.0	6.2	1.20	.59	.71	.83	20.2	5.9	1.36	.59	.72	.85	19.4	5.7	1.54	.59	.73	.87	18.5	5.4	1.76	.61	.75	.89
	685	325	22.0	6.4	1.20	.62	.76	.91	21.4	6.3	1.37	.63	.78	.93	20.4	6.0	1.55	.63	.80	.95	19.4	5.7	1.77	.65	.82	.98
	780	370	22.6	6.6	1.20	.64	.80	.95	21.8	6.4	1.37	.65	.82	.97	21.0	6.2	1.55	.66	.84	.99	19.8	5.8	1.77	.67	.86	1.00
71°F (22°C)	535	255	22.2	6.5	1.20	.45	.57	.69	21.4	6.3	1.36	.45	.57	.70	20.6	6.0	1.55	.45	.58	.71	19.6	5.7	1.77	.45	.59	.72
	685	325	23.2	6.8	1.21	.47	.60	.74	22.4	6.6	1.37	.46	.61	.76	21.6	6.3	1.56	.47	.62	.77	20.6	6.0	1.77	.47	.63	.79
	780	370	23.6	6.9	1.21	.47	.62	.77	23.0	6.7	1.37	.48	.64	.79	22.2	6.5	1.56	.48	.65	.81	21.0	6.2	1.77	.48	.66	.83
13ACC-018 - CBX32MV-024/030 TXV COOLING CAPACITY																										
63°F (17°C)	540	255	20.0	5.9	1.19	.74	.87	.99	19.3	5.7	1.36	.75	.89	1.00	18.5	5.4	1.54	.76	.91	1.00	17.5	5.1	1.76	.78	.94	1.00
	600	285	20.6	6.0	1.20	.76	.91	1.00	19.8	5.8	1.36	.78	.93	1.00	18.9	5.5	1.54	.79	.95	1.00	17.9	5.2	1.76	.81	.98	1.00
	660	310	21.0	6.2	1.20	.79	.94	1.00	20.2	5.9	1.36	.80	.96	1.00	19.3	5.7	1.55	.82	.98	1.00	18.3	5.4	1.76	.84	1.00	1.00
67°F (19°C)	540	255	21.2	6.2	1.20	.59	.72	.84	20.4	6.0	1.36	.59	.72	.85	19.7	5.8	1.55	.60	.74	.87	18.7	5.5	1.76	.61	.76	.90
	600	285	21.8	6.4	1.20	.60	.74	.87	21.0	6.2	1.36	.61	.75	.89	20.2	5.9	1.55	.61	.76	.91	19.1	5.6	1.76	.62	.78	.94
	660	310	22.2	6.5	1.20	.61	.76	.90	21.4	6.3	1.37	.62	.78	.92	20.6	6.0	1.55	.63	.79	.95	19.5	5.7	1.77	.64	.81	.97
71°F (22°C)	540	255	22.4	6.6	1.20	.45	.57	.69	21.6	6.3	1.36	.45	.58	.70	20.8	6.1	1.55	.45	.58	.71	19.8	5.8	1.77	.45	.59	.73
	600	285	23.0	6.7	1.20	.46	.59	.71	22.2	6.5	1.37	.45	.59	.73	21.2	6.2	1.55	.46	.60	.74	20.2	5.9	1.77	.46	.61	.76
	660	310	23.4	6.9	1.21	.46	.60	.74	22.6	6.6	1.37	.47	.61	.75	21.8	6.4	1.56	.47	.62	.77	20.6	6.0	1.77	.47	.63	.79
13ACC-018 - CB30M-31 TXV COOLING CAPACITY																										
63°F (17°C)	615	290	20.6	6.0	1.20	.77	.91	1.00	19.8	5.8	1.36	.78	.94	1.00	19.0	5.6	1.54	.80	.96	1.00	18.0	5.3	1.76	.82	.98	1.00
	615	290	20.6	6.0	1.20	.77	.91	1.00	19.8	5.8	1.36	.78	.94	1.00	19.0	5.6	1.54	.80	.96	1.00	18.0	5.3	1.76	.82	.98	1.00
	675	320	21.2	6.2	1.20	.79	.95	1.00	20.2	5.9	1.36	.81	.97	1.00	19.4	5.7	1.55	.82	.99	1.00	18.4	5.4	1.76	.85	1.00	1.00
67°F (19°C)	615	290	22.0	6.4	1.20	.60	.74	.88	21.2	6.2	1.36	.61	.76	.90	20.2	5.9	1.55	.62	.77	.92	19.2	5.6	1.76	.63	.79	.95
	615	290	22.0	6.4	1.20	.60	.74	.88	21.2	6.2	1.36	.61	.76	.90	20.2	5.9	1.55	.62	.77	.92	19.2	5.6	1.76	.63	.79	.95
	675	320	22.4	6.6	1.20	.62	.77	.91	21.6	6.3	1.37	.63	.78	.93	20.6	6.0	1.55	.64	.80	.96	19.5	5.7	1.77	.65	.82	.98
71°F (22°C)	615	290	23.0	6.7	1.21	.46	.59	.72	22.2	6.5	1.37	.45	.60	.74	21.4	6.3	1.55	.46	.60	.75	20.4	6.0	1.77	.46	.61	.77
	615	290	23.0	6.7	1.21	.46	.59	.72	22.2	6.5	1.37	.45	.60	.74	21.4	6.3	1.55	.46	.60	.75	20.4	6.0	1.77	.46	.61	.77
	675	320	23.4	6.9	1.21	.46	.61	.74	22.8	6.7	1.37	.47	.62	.76	21.8	6.4	1.56	.47	.63	.78	20.8	6.1	1.77	.47	.63	.79
13ACC-018 - CB30U-31 TXV COOLING CAPACITY																										
63°F (17°C)	615	290	20.6	6.0	1.20	.77	.91	1.00	19.8	5.8	1.36	.78	.94	1.00	19.0	5.6	1.54	.80	.96	1.00	18.0	5.3	1.76	.82	.98	1.00
	615	290	20.6	6.0	1.20	.77	.91	1.00	19.8	5.8	1.36	.78	.94	1.00	19.0	5.6	1.54	.80	.96	1.00	18.0	5.3	1.76	.82	.98	1.00
	670	315	21.0	6.2	1.20	.79	.94	1.00	20.2	5.9	1.36	.81	.96	1.00	19.4	5.7	1.55	.82	.98	1.00	18.4	5.4	1.76	.84	1.00	1.00
67°F (19°C)	615	290	22.0	6.4	1.20	.60	.74	.88	21.2	6.2	1.36	.61	.76	.90	20.2	5.9	1.55	.62	.77	.92	19.2	5.6	1.76	.63	.79	.95
	615	290	22.0	6.4	1.20	.60	.74	.88	21.2	6.2	1.36	.61	.76	.90	20.2	5.9	1.55	.62	.77	.92	19.2	5.6	1.76	.63	.79	.95
	670	315	22.2	6.5	1.20	.62	.77	.91	21.4	6.3	1.37	.63	.78	.93	20.6	6.0	1.55	.63	.80	.95	19.5	5.7	1.77	.64	.82	.98
71°F (22°C)	615	290	23.0	6.7	1.21	.46	.59	.72	22.2	6.5	1.37	.45	.60	.74	21.4	6.3	1.55	.46	.60	.75	20.4	6.0	1.77	.46	.61	.77
	615	290	23.0	6.7	1.21	.46	.59	.72	22.2	6.5	1.37	.45	.60	.74	21.4	6.3	1.55	.46	.60	.75	20.4	6.0	1.77	.46	.61	.77
	670	315	23.4	6.9	1.21	.46	.60	.74	22.6	6.6	1.37	.47	.61	.76	21.8	6.4	1.56	.47	.62	.77	20.8	6.1	1.77	.47	.63	.79

RATINGS — 2 TON

13ACC-024 — C33-18A TXV and RFC COOLING CAPACITY																										
63°F (17°C)	650	305	22.3	6.5	1.50	.73	.87	.98	21.6	6.3	1.69	.74	.88	.99	20.8	6.1	1.91	.75	.90	1.00	20.0	5.9	2.17	.77	.92	1.00
	800	380	23.1	6.8	1.50	.78	.93	1.00	22.3	6.5	1.69	.79	.94	1.00	21.5	6.3	1.91	.80	.96	1.00	20.6	6.0	2.17	.82	.98	1.00
	950	450	23.7	6.9	1.50	.83	.97	1.00	22.9	6.7	1.69	.84	.99	1.00	22.1	6.5	1.91	.86	1.00	1.00	21.3	6.2	2.17	.87	1.00	1.00
67°F (19°C)	650	305	23.7	6.9	1.50	.57	.71	.84	22.9	6.7	1.69	.57	.72	.86	22.0	6.4	1.91	.58	.73	.87	21.1	6.2	2.17	.59	.75	.89
	800	380	24.2	7.1	1.50	.59	.76	.90	23.4	6.9	1.69	.61	.77	.92	22.6	6.6	1.91	.61	.78	.93	21.6	6.3	2.17	.62	.80	.95
	950	450	24.7	7.2	1.51	.63	.80	.95	23.9	7.0	1.69	.64	.82	.97	23.0	6.7	1.91	.64	.83	.98	22.0	6.4	2.17	.66	.85	1.00
71°F (22°C)	650	305	25.2	7.4	1.51	.42	.55	.68	24.4	7.2	1.70	.43	.56	.69	23.5	6.9	1.91	.43	.57	.70	22.5	6.6	2.17	.43	.58	.72
	800	380	25.8	7.6	1.51	.43	.58	.73	24.9	7.3	1.70	.44	.59	.75	24.0	7.0	1.91	.44	.60	.76	23.0	6.7	2.17	.44	.61	.78
	950	450	26.2	7.7	1.51	.45	.62	.78	25.3	7.4	1.70	.45	.63	.80	24.4	7.2	1.92	.45	.63	.81	23.3	6.8	2.17	.46	.65	.84
13ACC-024 — C23-26 TXV and RFC COOLING CAPACITY																										
63°F (17°C)	650	305	22.9	6.7	1.50	.72	.86	.98	22.2	6.5	1.69	.73	.87	.99	21.4	6.3	1.91	.74	.89	1.00	20.4	6.0	2.17	.76	.91	1.00
	800	380	23.7	6.9	1.51	.77	.93	1.00	23.0	6.7	1.69	.78	.94	1.00	22.1	6.5	1.91	.80	.95	1.00	21.2	6.2	2.17	.82	.97	1.00
	950	450	24.4	7.2	1.51	.81	.97	1.00	23.6	6.9	1.70	.83	.98	1.00	22.8	6.7	1.91	.85	1.00	1.00	21.9	6.4	2.17	.87	1.00	1.00
67°F (19°C)	650	305	24.4	7.2	1.51	.56	.70	.83	23.6	6.9	1.69	.57	.70	.84	22.7	6.7	1.91	.58	.72	.86	21.7	6.4	2.17	.58	.73	.88
	800	380	25.1	7.4	1.51	.59	.75	.89	24.2	7.1	1.70	.60	.76	.91	23.3	6.8	1.92	.61	.77	.92	22.3	6.5	2.17	.62	.79	.95
	950	450	25.6	7.5	1.51	.62	.79	.95	24.7	7.2	1.70	.63	.81	.96	23.8	7.0	1.92	.64	.82	.97	22.7	6.7	2.18	.65	.84	.99
71°F (22°C)	650	305	26.0	7.6	1.52	.42	.55	.67	25.2	7.4	1.70	.42	.55	.68	24.2	7.1	1.92	.43	.56	.70	23.2	6.8	2.18	.43	.57	.71
	800	380	26.7	7.8	1.52	.43	.58	.72	25.8	7.6	1.71	.43	.58	.73	24.8	7.3	1.92	.44	.59	.75	23.7	6.9	2.18	.44	.61	.77
	950	450	27.2	8.0	1.52	.44	.61	.77	26.2	7.7	1.71	.45	.62	.78	25.2	7.4	1.93	.45	.63	.80	24.1	7.1	2.18	.46	.64	.82

NOTE - For Temperatures and Capacities not shown in tables, see bulletin - Cooling Unit Rating Table Correction Factor Data in Miscellaneous Engineering Data section.

Entering Wet Bulb Temperature	Total Air Volume		Outdoor Air Temperature Entering Outdoor Coil																							
			85°F (29°C)						95°F (35°C)						105°F (41°C)						115°F (46°C)					
			Total Cooling Capacity		Comp Motor kW Input	Sensible To Total Ratio (S/T) Dry Bulb			Total Cooling Capacity		Comp Motor kW Input	Sensible To Total Ratio (S/T) Dry Bulb			Total Cooling Capacity		Comp Motor kW Input	Sensible To Total Ratio (S/T) Dry Bulb			Total Cooling Capacity		Comp Motor kW Input	Sensible To Total Ratio (S/T) Dry Bulb		
	cfm	L/s	kBtuh	kW		75°F 24°C	80°F 27°C	85°F 29°C	kBtuh	kW		75°F 24°C	80°F 27°C	85°F 29°C	kBtuh	kW		75°F 24°C	80°F 27°C	85°F 29°C	kBtuh	kW		75°F 24°C	80°F 27°C	85°F 29°C
13ACC-024 — C26-26 TXV and RFC COOLING CAPACITY																										
63°F (17°C)	650	305	23.4	6.9	1.50	.72	.86	.98	22.6	6.6	1.68	.73	.88	.99	21.8	6.4	1.90	.74	.89	1.00	20.8	6.1	2.15	.76	.92	1.00
	800	380	24.3	7.1	1.50	.77	.92	1.00	23.4	6.9	1.69	.78	.94	1.00	22.6	6.6	1.90	.80	.96	1.00	21.6	6.3	2.16	.82	.98	1.00
	950	450	25.0	7.3	1.50	.82	.97	1.00	24.2	7.1	1.69	.83	.99	1.00	23.3	6.8	1.91	.85	1.00	1.00	22.4	6.6	2.16	.87	1.00	1.00
67°F (19°C)	650	305	24.9	7.3	1.50	.56	.70	.83	24.1	7.1	1.69	.57	.71	.84	23.1	6.8	1.91	.58	.72	.86	22.1	6.5	2.16	.59	.73	.88
	800	380	25.7	7.5	1.51	.59	.74	.89	24.8	7.3	1.70	.60	.76	.91	23.8	7.0	1.91	.61	.77	.93	22.7	6.7	2.16	.62	.79	.95
	950	450	26.2	7.7	1.51	.62	.80	.95	25.3	7.4	1.70	.63	.81	.97	24.3	7.1	1.91	.64	.83	.98	23.2	6.8	2.17	.66	.85	1.00
71°F (22°C)	650	305	26.6	7.8	1.51	.42	.55	.67	25.7	7.5	1.70	.42	.55	.68	24.7	7.2	1.92	.42	.56	.69	23.6	6.9	2.17	.43	.57	.71
	800	380	27.3	8.0	1.52	.43	.58	.73	26.4	7.7	1.71	.44	.59	.74	25.3	7.4	1.92	.44	.59	.75	24.2	7.1	2.17	.44	.61	.77
	950	450	27.8	8.1	1.52	.45	.61	.77	26.8	7.9	1.71	.45	.62	.79	25.8	7.6	1.92	.45	.63	.81	24.6	7.2	2.17	.46	.65	.83
13ACC-024 — C23-31 TXV and RFC COOLING CAPACITY																										
63°F (17°C)	650	305	23.5	6.9	1.50	.72	.85	.97	22.7	6.7	1.69	.73	.87	.99	21.8	6.4	1.91	.74	.89	1.00	20.8	6.1	2.17	.75	.91	1.00
	800	380	24.3	7.1	1.51	.76	.91	1.00	23.4	6.9	1.70	.77	.93	1.00	22.6	6.6	1.91	.79	.94	1.00	21.6	6.3	2.17	.81	.97	1.00
	950	450	24.9	7.3	1.51	.81	.97	1.00	24.1	7.1	1.70	.83	.98	1.00	23.3	6.8	1.91	.84	.99	1.00	22.3	6.5	2.17	.86	1.00	1.00
67°F (19°C)	650	305	25.0	7.3	1.51	.56	.69	.82	24.1	7.1	1.70	.57	.70	.83	23.2	6.8	1.91	.57	.71	.85	22.2	6.5	2.17	.58	.73	.87
	800	380	25.7	7.5	1.51	.59	.74	.88	24.8	7.3	1.70	.59	.75	.90	23.8	7.0	1.92	.60	.77	.92	22.8	6.7	2.18	.61	.78	.94
	950	450	26.2	7.7	1.52	.62	.79	.94	25.3	7.4	1.70	.62	.80	.96	24.3	7.1	1.92	.63	.82	.97	23.2	6.8	2.18	.64	.84	.99
71°F (22°C)	650	305	26.7	7.8	1.52	.42	.54	.66	25.8	7.6	1.71	.42	.55	.68	24.8	7.3	1.92	.42	.55	.69	23.7	6.9	2.18	.43	.56	.70
	800	380	27.4	8.0	1.52	.43	.57	.71	26.4	7.7	1.71	.44	.58	.73	25.4	7.4	1.93	.44	.59	.74	24.3	7.1	2.18	.44	.60	.76
	950	450	27.9	8.2	1.53	.44	.60	.76	26.9	7.9	1.72	.45	.61	.78	25.9	7.6	1.93	.45	.62	.80	24.7	7.2	2.18	.45	.64	.82
13ACC-024 — C33-24A/B/C TXV and RFC COOLING CAPACITY																										
63°F (17°C)	650	305	23.8	7.0	1.50	.72	.86	.98	23.0	6.7	1.69	.74	.88	1.00	22.1	6.5	1.91	.75	.90	1.00	21.2	6.2	2.17	.76	.92	1.00
	800	380	24.6	7.2	1.51	.77	.93	1.00	23.7	6.9	1.70	.78	.95	1.00	22.9	6.7	1.91	.80	.96	1.00	21.9	6.4	2.17	.82	.98	1.00
	950	450	25.3	7.4	1.51	.82	.98	1.00	24.4	7.2	1.70	.84	.99	1.00	23.6	6.9	1.91	.86	1.00	1.00	22.7	6.7	2.17	.87	1.00	1.00
67°F (19°C)	650	305	25.3	7.4	1.51	.56	.70	.83	24.4	7.2	1.70	.57	.71	.85	23.5	6.9	1.91	.58	.72	.86	22.4	6.6	2.18	.59	.74	.89
	800	380	25.9	7.6	1.51	.60	.75	.90	25.0	7.3	1.70	.60	.76	.91	24.1	7.1	1.92	.61	.78	.93	23.0	6.7	2.18	.62	.80	.95
	950	450	26.4	7.7	1.52	.62	.80	.95	25.5	7.5	1.70	.63	.82	.97	24.5	7.2	1.92	.64	.83	.98	23.5	6.9	2.18	.66	.85	1.00
71°F (22°C)	650	305	26.9	7.9	1.52	.42	.55	.68	26.0	7.6	1.70	.43	.56	.69	25.0	7.3	1.92	.43	.56	.70	23.9	7.0	2.18	.43	.58	.71
	800	380	27.6	8.1	1.52	.43	.58	.73	26.6	7.8	1.71	.44	.59	.74	25.6	7.5	1.92	.44	.60	.76	24.5	7.2	2.18	.44	.61	.78
	950	450	28.0	8.2	1.52	.44	.62	.78	27.1	7.9	1.71	.45	.62	.79	26.0	7.6	1.93	.45	.64	.81	24.9	7.3	2.18	.46	.65	.83
13ACC-024 — C33-30A/B/C TXV and RFC COOLING CAPACITY																										
63°F (17°C)	650	305	24.1	7.1	1.51	.72	.86	.98	23.3	6.8	1.69	.73	.88	.99	22.4	6.6	1.91	.74	.89	1.00	21.4	6.3	2.17	.76	.91	1.00
	800	380	25.0	7.3	1.51	.77	.93	1.00	24.1	7.1	1.70	.79	.94	1.00	23.2	6.8	1.91	.80	.96	1.00	22.2	6.5	2.17	.82	.98	1.00
	950	450	25.7	7.5	1.51	.82	.98	1.00	24.8	7.3	1.70	.84	.99	1.00	23.9	7.0	1.92	.85	1.00	1.00	23.0	6.7	2.17	.87	1.00	1.00
67°F (19°C)	650	305	25.6	7.5	1.51	.56	.70	.83	24.7	7.2	1.70	.57	.71	.85	23.8	7.0	1.92	.58	.72	.86	22.7	6.7	2.18	.59	.74	.88
	800	380	26.4	7.7	1.52	.59	.75	.89	25.4	7.4	1.71	.60	.76	.91	24.4	7.2	1.92	.61	.78	.93	23.3	6.8	2.18	.62	.80	.95
	950	450	26.9	7.9	1.52	.62	.80	.95	25.9	7.6	1.71	.63	.82	.97	24.9	7.3	1.92	.64	.83	.98	23.8	7.0	2.18	.66	.85	1.00
71°F (22°C)	650	305	27.4	8.0	1.52	.42	.55	.67	26.4	7.7	1.71	.42	.56	.68	25.4	7.4	1.93	.42	.56	.69	24.3	7.1	2.18	.43	.57	.71
	800	380	28.1	8.2	1.53	.43	.58	.73	27.1	7.9	1.72	.43	.59	.74	26.0	7.6	1.93	.44	.60	.75	24.9	7.3	2.19	.44	.61	.77
	950	450	28.6	8.4	1.53	.44	.61	.78	27.5	8.1	1.72	.45	.62	.79	26.5	7.8	1.93	.45	.63	.81	25.3	7.4	2.19	.46	.65	.83
13ACC-024 — C33-36A/B/C TXV and RFC COOLING CAPACITY																										
63°F (17°C)	650	305	24.2	7.1	1.51	.72	.86	.98	23.3	6.8	1.70	.73	.88	1.00	22.4	6.6	1.91	.74	.89	1.00	21.4	6.3	2.17	.76	.91	1.00
	800	380	25.0	7.3	1.51	.77	.93	1.00	24.2	7.1	1.70	.78	.94	1.00	23.2	6.8	1.92	.80	.96	1.00	22.2	6.5	2.18	.82	.98	1.00
	950	450	25.8	7.6	1.52	.82	.98	1.00	24.9	7.3	1.70	.84	.99	1.00	24.0	7.0	1.92	.85	1.00	1.00	23.1	6.8	2.18	.87	1.00	1.00
67°F (19°C)	650	305	25.7	7.5	1.52	.56	.70	.83	24.8	7.3	1.71	.57	.71	.84	23.9	7.0	1.92	.58	.72	.86	22.8	6.7	2.18	.59	.73	.88
	800	380	26.5	7.8	1.52	.59	.75	.89	25.6	7.5	1.71	.60	.76	.91	24.5	7.2	1.92	.61	.78	.93	23.4	6.9	2.18	.62	.80	.95
	950	450	27.1	7.9	1.53	.62	.80	.95	26.1	7.6	1.71	.63	.81	.97	25.0	7.3	1.93	.64	.83	.98	23.9	7.0	2.19	.66	.85	1.00
71°F (22°C)	650	305	27.5	8.1	1.53	.42	.54	.67	26.5	7.8	1.72	.43	.55	.68	25.5	7.5	1.93	.43	.56	.69	24.4	7.2	2.19	.43	.57	.71
	800	380	28.2	8.3	1.54	.43	.58	.72	27.2	8.0	1.72	.44	.59	.74	26.1	7.6	1.94	.44	.60	.75	24.9	7.3	2.19	.45	.61	.77
	950	450	28.8	8.4	1.54	.44	.61	.77	27.7	8.1	1.73	.45	.62	.79	26.6	7.8	1.94	.45	.63	.81	25.4	7.4	2.19	.46	.65	.83
13ACC-024 — C26-31 TXV and RFC COOLING CAPACITY																										
63°F (17°C)	650	305	24.0	7.0	1.51	.72	.86	.98	23.1	6.8	1.70	.73	.87	.99	22.3	6.5	1.91	.74	.89	1.00	21.3	6.2	2.17	.76	.91	1.00
	800	380	24.8	7.3	1.51	.77	.92	1.00	24.0	7.0	1.70	.78	.94	1.00	23.1	6.8	1.92	.80	.95	1.00	22.0	6.4	2.17	.81	.98	1.00
	950	450	25.6	7.5	1.52	.82	.97	1.00	24.7	7.2	1.70	.83	.99	1.00	23.8	7.0	1.92	.85	1.00	1.00	22.9	6.7	2.18	.87	1.00	1.00
67°F (19°C)	650	305	25.6	7.5	1.52	.56	.69	.82	24.7	7.2	1.70	.57	.70	.84	23.7	6.9	1.92	.58	.71	.85	22.6	6.6	2.18	.58	.73	.87
	800	380	26.3	7.7	1.52	.59	.74	.89	25.4	7.4	1.71	.60	.75	.91	24.4	7.2	1.92	.60	.77	.92	23.3	6.8	2.18	.62	.79	.95
	950	450	26.9	7.9	1.52	.62	.79	.95	25.9	7.6	1.71	.63	.81	.96	24.9	7.3	1.93	.64	.83	.98	23.7	6.9	2.18	.65	.85	1.00
71°F (22°C)	650	305	27.3	8.0	1.53	.42	.54	.67	26.3	7.7	1.72	.43	.55	.68	25.3	7.4	1.93	.43	.56	.69	24.2	7.1	2.18	.43	.57	.70
	800	380	28.0	8.2	1.53	.43	.58	.72	27.0	7.9	1.72	.44	.58	.73	26.0	7.6	1.93	.44	.59	.75	24.8	7.3	2.19	.44	.60	.77
	950	450	28.6	8.4	1.54	.44	.61	.77	27.5	8.1	1.72	.45	.62	.78	26.4	7.7	1.94	.45	.63	.80	25.2	7.4	2.19	.46	.64	.82
13ACC-024 — C33-38A/B TXV and RFC COOLING CAPACITY																										
63°F (17°C)	650	305	24.8	7.3	1.51	.71	.85	.98	23.9	7.0	1.70	.72	.87	.99	23.0	6.7	1.92	.74	.89	1.00	21.9	6.4	2.18	.75	.91	1.00
	800	380	25.8	7.6	1.52	.77	.92	1.00	24.8	7.3	1.71	.78	.94	1.00	23.8	7.0	1.92	.79	.96	1.00	22.8	6.7	2.18	.81	.98	1.00
	950	450	26.6	7.8	1.53	.81	.98	1.00	25.6	7.5	1.71	.83	1.00	1.00	24.7	7.2	1.93	.85	1.00	1.00	23.7	6.9	2.18	.87	1.00	1.00
67°F (19°C)	650	305	26.5	7.8	1.52	.56	.69	.82	25.6	7.5	1.71	.56	.70	.83	24.5	7.2	1.93	.57	.71	.85	23.4	6.9	2.18	.58	.73	.87
	800	380	27.4	8.0	1.53	.59	.74	.89	26.4	7.7	1.72	.60	.75	.91	25.3	7.4	1.93	.60	.77	.93	24.1	7.1	2.19	.62	.79	.95
	950	450	28.0	8.2	1.54	.62	.79	.95	26.9	7.9	1.72	.63	.81	.97	25.8	7.6	1.94	.64	.83	.99	24.6	7.2	2.19	.65	.85	1.00
71°F (22°C)	650	305	28.3	8.3	1.54	.42	.54	.66	27.3	8.0	1.72	.42	.55	.67	26.2	7.7	1.94	.43	.56	.69	25.0	7.3	2.19	.43	.57	.70
	800	380	29.2	8.6	1.55	.43	.57	.72	28.1	8.2	1.73	.43	.58	.73	27.0	7.9	1.94	.44	.59	.74	25.7	7.5	2.20	.44	.60	.76
	950	450	29.8	8.7	1.55	.44	.60	.77	28.7	8.4	1.74	.44	.62	.78	27.5	8.1	1.95	.45	.63	.80	26.2	7.7	2.20	.46	.64	.83

NOTE - For Temperatures and Capacities not shown in tables, see bulletin - Cooling Unit Rating Table Correction Factor Data in Miscellaneous Engineering Data section.

Entering Wet Bulb Temperature	Total Air Volume		Outdoor Air Temperature Entering Outdoor Coil																							
			85°F (29°C)						95°F (35°C)						105°F (41°C)						115°F (46°C)					
			Total Cooling Capacity		Comp Motor kW Input	Sensible To Total Ratio (S/T) Dry Bulb			Total Cooling Capacity		Comp Motor kW Input	Sensible To Total Ratio (S/T) Dry Bulb			Total Cooling Capacity		Comp Motor kW Input	Sensible To Total Ratio (S/T) Dry Bulb			Total Cooling Capacity		Comp Motor kW Input	Sensible To Total Ratio (S/T) Dry Bulb		
	cfm	L/s	kBtuh	kW		75°F 24°C	80°F 27°C	85°F 29°C	kBtuh	kW		75°F 24°C	80°F 27°C	85°F 29°C	kBtuh	kW		75°F 24°C	80°F 27°C	85°F 29°C	kBtuh	kW		75°F 24°C	80°F 27°C	85°F 29°C
13ACC-024 — C33-18A TXV with G60UHV-36A-070 COOLING CAPACITY																										
63°F (17°C)	710	335	22.7	6.7	1.50	.71	.87	.99	22.0	6.4	1.69	.72	.89	1.00	21.2	6.2	1.91	.73	.91	1.00	20.3	5.9	2.17	.74	.93	1.00
	860	405	23.4	6.9	1.50	.75	.94	1.00	22.6	6.6	1.69	.76	.96	1.00	21.8	6.4	1.91	.79	.98	1.00	21.0	6.2	2.17	.81	.99	1.00
	1010	475	24.0	7.0	1.50	.80	.98	1.00	23.3	6.8	1.69	.82	.99	1.00	22.5	6.6	1.91	.84	1.00	1.00	21.6	6.3	2.17	.86	1.00	1.00
67°F (19°C)	710	335	24.0	7.0	1.50	.55	.68	.83	23.2	6.8	1.69	.55	.69	.85	22.4	6.6	1.91	.56	.71	.87	21.4	6.3	2.17	.57	.72	.90
	860	405	24.5	7.2	1.51	.57	.73	.90	23.7	6.9	1.69	.58	.74	.92	22.8	6.7	1.91	.59	.76	.94	21.9	6.4	2.17	.60	.78	.96
	1010	475	24.9	7.3	1.51	.60	.78	.96	24.1	7.1	1.70	.61	.80	.98	23.2	6.8	1.91	.62	.82	.99	22.2	6.5	2.17	.63	.84	1.00
71°F (22°C)	710	335	25.5	7.5	1.51	.40	.53	.66	24.7	7.2	1.70	.40	.54	.67	23.8	7.0	1.91	.41	.55	.68	22.8	6.7	2.17	.41	.55	.70
	860	405	26.0	7.6	1.51	.41	.56	.71	25.2	7.4	1.70	.41	.57	.72	24.2	7.1	1.92	.42	.58	.73	23.2	6.8	2.17	.42	.59	.76
	1010	475	26.4	7.7	1.51	.42	.59	.76	25.5	7.5	1.70	.43	.60	.77	24.6	7.2	1.92	.43	.61	.80	23.5	6.9	2.17	.44	.62	.82
13ACC-024 — C33-24A/B TXV with G60UHV-36A/B COOLING CAPACITY																										
63°F (17°C)	710	335	24.2	7.1	1.50	.75	.89	1.00	23.4	6.9	1.69	.76	.91	1.00	22.5	6.6	1.91	.77	.93	1.00	21.5	6.3	2.17	.79	.95	1.00
	860	405	24.9	7.3	1.50	.79	.95	1.00	24.1	7.1	1.69	.80	.97	1.00	23.2	6.8	1.91	.82	.98	1.00	22.3	6.5	2.17	.84	.99	1.00
	1010	475	25.6	7.5	1.51	.84	.99	1.00	24.8	7.3	1.69	.85	1.00	1.00	24.0	7.0	1.91	.87	1.00	1.00	23.0	6.7	2.17	.89	1.00	1.00
67°F (19°C)	710	335	25.6	7.5	1.51	.58	.72	.86	24.7	7.2	1.69	.59	.73	.87	23.8	7.0	1.91	.59	.74	.89	22.7	6.7	2.17	.60	.76	.91
	860	405	26.2	7.7	1.51	.60	.77	.92	25.3	7.4	1.70	.61	.78	.94	24.3	7.1	1.91	.62	.80	.95	23.3	6.8	2.17	.64	.82	.97
	1010	475	26.7	7.8	1.51	.64	.82	.97	25.7	7.5	1.70	.64	.83	.98	24.8	7.3	1.92	.65	.85	.99	23.7	6.9	2.17	.67	.87	1.00
71°F (22°C)	710	335	27.3	8.0	1.51	.43	.56	.70	26.4	7.7	1.70	.43	.57	.71	25.4	7.4	1.92	.43	.58	.72	24.2	7.1	2.18	.44	.59	.74
	860	405	27.9	8.2	1.52	.44	.59	.75	26.9	7.9	1.70	.44	.60	.76	25.9	7.6	1.92	.44	.61	.78	24.7	7.2	2.18	.45	.63	.79
	1010	475	28.3	8.3	1.52	.45	.63	.80	27.3	8.0	1.71	.45	.63	.81	26.2	7.7	1.92	.46	.65	.83	25.1	7.4	2.18	.47	.66	.85
13ACC-024 — C33-30A/B TXV with G60UHV-36A/B COOLING CAPACITY																										
63°F (17°C)	710	335	24.5	7.2	1.51	.70	.86	.99	23.7	6.9	1.70	.71	.88	1.00	22.8	6.7	1.91	.72	.90	1.00	21.8	6.4	2.17	.74	.93	1.00
	860	405	25.3	7.4	1.51	.75	.94	1.00	24.5	7.2	1.70	.76	.95	1.00	23.6	6.9	1.91	.78	.97	1.00	22.6	6.6	2.17	.80	.99	1.00
	1010	475	26.0	7.6	1.51	.80	.99	1.00	25.2	7.4	1.70	.82	1.00	1.00	24.3	7.1	1.92	.84	1.00	1.00	23.4	6.9	2.18	.87	1.00	1.00
67°F (19°C)	710	335	26.0	7.6	1.52	.54	.68	.82	25.1	7.4	1.70	.55	.69	.84	24.1	7.1	1.92	.56	.70	.86	23.1	6.8	2.17	.56	.71	.89
	860	405	26.7	7.8	1.52	.57	.72	.90	25.7	7.5	1.71	.58	.73	.92	24.7	7.2	1.92	.58	.75	.94	23.6	6.9	2.18	.60	.78	.97
	1010	475	27.2	8.0	1.52	.60	.78	.96	26.2	7.7	1.71	.61	.79	.98	25.2	7.4	1.92	.62	.82	.99	24.0	7.0	2.18	.63	.84	1.00
71°F (22°C)	710	335	27.8	8.1	1.53	.40	.53	.65	26.8	7.9	1.71	.40	.53	.66	25.7	7.5	1.93	.41	.54	.67	24.6	7.2	2.18	.41	.55	.69
	860	405	28.4	8.3	1.53	.41	.56	.70	27.4	8.0	1.72	.41	.56	.71	26.3	7.7	1.93	.42	.57	.73	25.1	7.4	2.19	.42	.59	.75
	1010	475	28.8	8.4	1.53	.42	.59	.75	27.8	8.1	1.72	.42	.60	.77	26.7	7.8	1.94	.43	.61	.79	25.5	7.5	2.19	.43	.62	.82
13ACC-024 — C33-36A/B TXV with G60UHV-36A/B COOLING CAPACITY																										
63°F (17°C)	710	335	24.6	7.2	1.51	.74	.89	1.00	23.8	7.0	1.70	.75	.90	1.00	22.8	6.7	1.91	.76	.92	1.00	21.8	6.4	2.17	.78	.94	1.00
	860	405	25.4	7.4	1.51	.79	.95	1.00	24.5	7.2	1.70	.80	.97	1.00	23.6	6.9	1.92	.82	.98	1.00	22.6	6.6	2.18	.84	1.00	1.00
	1010	475	26.2	7.7	1.52	.84	.99	1.00	25.3	7.4	1.71	.85	1.00	1.00	24.4	7.2	1.92	.87	1.00	1.00	23.5	6.9	2.18	.89	1.00	1.00
67°F (19°C)	710	335	26.2	7.7	1.52	.58	.71	.85	25.2	7.4	1.71	.58	.73	.87	24.2	7.1	1.92	.59	.74	.89	23.1	6.8	2.18	.60	.76	.91
	860	405	26.8	7.9	1.52	.61	.77	.92	25.9	7.6	1.71	.61	.78	.94	24.8	7.3	1.93	.62	.80	.96	23.7	6.9	2.18	.63	.82	.97
	1010	475	27.3	8.0	1.53	.63	.82	.97	26.3	7.7	1.72	.65	.83	.99	25.3	7.4	1.93	.66	.85	1.00	24.1	7.1	2.19	.67	.87	1.00
71°F (22°C)	710	335	27.9	8.2	1.53	.43	.56	.69	26.9	7.9	1.72	.43	.57	.70	25.9	7.6	1.93	.43	.57	.71	24.7	7.2	2.19	.44	.59	.73
	860	405	28.5	8.4	1.54	.44	.59	.74	27.5	8.1	1.72	.44	.60	.76	26.4	7.7	1.94	.45	.61	.77	25.2	7.4	2.19	.45	.62	.79
	1010	475	29.0	8.5	1.54	.45	.62	.79	27.9	8.2	1.73	.45	.64	.81	26.8	7.9	1.94	.46	.65	.83	25.6	7.5	2.19	.46	.66	.85
13ACC-024 — C33-38A/B TXV with G60UHV-36A/B COOLING CAPACITY																										
63°F (17°C)	376	175	23.7	6.9	1.51	.64	.73	.83	22.9	6.7	1.70	.64	.74	.84	22.1	6.5	1.92	.65	.75	.85	21.1	6.2	2.18	.66	.76	.87
	526	250	25.8	7.6	1.52	.68	.80	.92	24.9	7.3	1.71	.68	.81	.93	24.0	7.0	1.93	.70	.82	.95	22.9	6.7	2.18	.71	.84	.96
	676	320	27.2	8.0	1.52	.72	.86	.99	26.2	7.7	1.71	.74	.88	1.00	25.1	7.4	1.93	.75	.90	1.00	24.0	7.0	2.19	.77	.92	1.00
67°F (19°C)	376	175	25.5	7.5	1.52	.52	.61	.70	24.7	7.2	1.71	.53	.61	.70	23.8	7.0	1.92	.52	.62	.71	22.8	6.7	2.18	.53	.63	.72
	526	250	27.7	8.1	1.53	.54	.65	.76	26.7	7.8	1.72	.55	.66	.77	25.7	7.5	1.93	.55	.67	.79	24.5	7.2	2.19	.56	.68	.80
	676	320	29.0	8.5	1.54	.57	.70	.83	27.9	8.2	1.72	.57	.71	.85	26.8	7.9	1.94	.58	.73	.87	25.6	7.5	2.20	.59	.74	.89
71°F (22°C)	376	175	27.4	8.0	1.53	.42	.50	.58	26.5	7.8	1.71	.42	.50	.58	25.6	7.5	1.93	.42	.50	.59	24.5	7.2	2.19	.42	.51	.60
	526	250	29.7	8.7	1.54	.42	.52	.62	28.6	8.4	1.73	.42	.53	.63	27.5	8.1	1.95	.42	.53	.64	26.3	7.7	2.20	.42	.54	.65
	676	320	31.0	9.1	1.55	.42	.55	.67	29.9	8.8	1.74	.42	.55	.68	28.7	8.4	1.95	.43	.56	.70	27.4	8.0	2.21	.43	.57	.71
13ACC-024 — CR26-30N-F TXV and RFC COOLING CAPACITY																										
63°F (17°C)	650	305	24.0	7.0	1.51	.72	.86	.98	23.1	6.8	1.70	.73	.87	.99	22.3	6.5	1.91	.74	.89	1.00	21.3	6.2	2.17	.76	.91	1.00
	800	380	24.8	7.3	1.51	.77	.92	1.00	24.0	7.0	1.70	.78	.94	1.00	23.1	6.8	1.92	.80	.95	1.00	22.0	6.4	2.17	.81	.98	1.00
	950	450	25.6	7.5	1.52	.82	.97	1.00	24.7	7.2	1.70	.83	.99	1.00	23.8	7.0	1.92	.85	1.00	1.00	22.9	6.7	2.18	.87	1.00	1.00
67°F (19°C)	650	305	25.6	7.5	1.52	.56	.69	.82	24.7	7.2	1.70	.57	.70	.84	23.7	6.9	1.92	.58	.71	.85	22.6	6.6	2.18	.58	.73	.87
	800	380	26.3	7.7	1.52	.59	.74	.89	25.4	7.4	1.71	.60	.75	.91	24.4	7.2	1.92	.60	.77	.92	23.3	6.8	2.18	.62	.79	.95
	950	450	26.9	7.9	1.52	.62	.79	.95	25.9	7.6	1.71	.63	.81	.96	24.9	7.3	1.93	.64	.83	.98	23.7	6.9	2.18	.65	.85	1.00
71°F (22°C)	650	305	27.3	8.0	1.53	.42	.54	.67	26.3	7.7	1.72	.43	.55	.68	25.3	7.4	1.93	.43	.56	.69	24.2	7.1	2.18	.43	.57	.70
	800	380	28.0	8.2	1.53	.43	.58	.72	27.0	7.9	1.72	.44	.58	.73	26.0	7.6	1.93	.44	.59	.75	24.8	7.3	2.19	.44	.60	.77
	950	450	28.6	8.4	1.54	.44	.61	.77	27.5	8.1	1.72	.45	.62	.78	26.4	7.7	1.94	.45	.63	.80	25.2	7.4	2.19	.46	.64	.82
13ACC-024 — CR26-30N-F TXV with G60DFV-36A-070 COOLING CAPACITY																										
63°F (17°C)	710	335	24.5	7.2	1.51	.69	.86	.99	23.7	6.9	1.70	.70	.87	1.00	22.8	6.7	1.91	.72	.90	1.00	21.8	6.4	2.17	.73	.92	1.00
	860	405	25.3	7.4	1.51	.74	.93	1.00	24.5	7.2	1.70	.76	.95	1.00	23.5	6.9	1.92	.78	.97	1.00	22.5	6.6	2.17	.80	.99	1.00
	1010	475	26.1	7.6	1.52	.80	.98	1.00	25.2	7.4	1.70	.81	.99	1.00	24.3	7.1	1.92	.84	1.00	1.00	23.4	6.9	2.18	.86	1.00	1.00
67°F (19°C)	710	335	26.1	7.6	1.52	.54	.67	.81	25.2	7.4	1.71	.54	.68	.83	24.2	7.1	1.92	.55	.69	.86	23.1	6.8	2.18	.56	.71	.88
	860	405	26.8	7.9	1.52	.56	.71	.89	25.8	7.6	1.71	.57	.73	.91	24.8	7.3	1.92	.58	.75	.94	23.6	6.9	2.18	.59	.77	.96
	1010	475	27.3	8.0	1.53	.59	.77	.96	26.3	7.7	1.71	.60	.79	.98	25.2	7.4	1.93	.61	.81	.99	24.1	7.1	2.19	.62	.84	1.00
71°F (22°C)	710	335	27.8	8.1	1.53	.40	.52	.65	26.8	7.9	1.72	.40	.53	.66	25.8	7.6	1.93	.40	.54	.67	24.7	7.2	2.19	.41	.55	.69
	860	405	28.5	8.4	1.54	.41	.55	.70	27.5	8.1	1.72	.41	.56	.71	26.4	7.7	1.94	.42	.57	.72	25.2	7.4	2.19	.42	.58	.75
	1010	475	29.0	8.5	1.54	.42	.58	.74	27.9	8.2	1.72	.42	.59	.76	26.8	7.9	1.94	.43	.60	.78	25.6	7.5	2.19	.43	.61	.82

NOTE - For Temperatures and Capacities not shown in tables, see bulletin - Cooling Unit Rating Table Correction Factor Data in Miscellaneous Engineering Data section.

Entering Wet Bulb Temperature	Total Air Volume		Outdoor Air Temperature Entering Outdoor Coil																							
			85°F (29°C)						95°F (35°C)						105°F (41°C)						115°F (46°C)					
			Total Cooling Capacity		Comp Motor kW Input	Sensible To Total Ratio (S/T) Dry Bulb			Total Cooling Capacity		Comp Motor kW Input	Sensible To Total Ratio (S/T) Dry Bulb			Total Cooling Capacity		Comp Motor kW Input	Sensible To Total Ratio (S/T) Dry Bulb			Total Cooling Capacity		Comp Motor kW Input	Sensible To Total Ratio (S/T) Dry Bulb		
	cfm	L/s	kBtuh	kW		75°F 24°C	80°F 27°C	85°F 29°C	kBtuh	kW		75°F 24°C	80°F 27°C	85°F 29°C	kBtuh	kW		75°F 24°C	80°F 27°C	85°F 29°C	kBtuh	kW		75°F 24°C	80°F 27°C	85°F 29°C
13ACC-024 — CH33-18A-2F TXV COOLING CAPACITY																										
63°F (17°C)	650	305	22.1	6.5	1.49	.73	.88	.98	21.4	6.3	1.68	.74	.89	1.00	20.7	6.1	1.90	.76	.90	1.00	19.8	5.8	2.16	.77	.93	1.00
	800	380	22.8	6.7	1.49	.78	.94	1.00	22.1	6.5	1.68	.80	.95	1.00	21.3	6.2	1.90	.81	.97	1.00	20.5	6.0	2.16	.83	.97	1.00
	950	450	23.4	6.9	1.49	.83	.98	1.00	22.7	6.7	1.68	.84	.99	1.00	21.9	6.4	1.90	.86	1.00	1.00	21.1	6.2	2.16	.88	1.00	1.00
67°F (19°C)	650	305	23.4	6.9	1.49	.57	.71	.85	22.7	6.7	1.68	.58	.72	.86	21.8	6.4	1.90	.58	.74	.88	20.9	6.1	2.16	.60	.75	.90
	800	380	23.9	7.0	1.49	.60	.76	.91	23.2	6.8	1.68	.61	.77	.92	22.3	6.5	1.90	.62	.79	.94	21.4	6.3	2.16	.62	.81	.96
	950	450	24.4	7.2	1.50	.63	.81	.96	23.6	6.9	1.69	.64	.82	.97	22.7	6.7	1.90	.65	.84	.98	21.8	6.4	2.16	.66	.86	1.00
71°F (22°C)	650	305	24.9	7.3	1.50	.43	.56	.69	24.1	7.1	1.69	.43	.56	.70	23.2	6.8	1.90	.43	.57	.71	22.3	6.5	2.16	.44	.58	.72
	800	380	25.4	7.4	1.50	.44	.59	.74	24.6	7.2	1.69	.44	.60	.75	23.7	6.9	1.90	.44	.61	.77	22.7	6.7	2.16	.45	.61	.79
	950	450	25.8	7.6	1.50	.45	.62	.79	25.0	7.3	1.69	.45	.63	.80	24.1	7.1	1.90	.46	.64	.82	23.1	6.8	2.16	.46	.65	.84
13ACC-024 — CH33-18A-2F RFC COOLING CAPACITY																										
63°F (17°C)	650	305	21.9	6.4	1.49	.74	.88	.99	21.2	6.2	1.68	.75	.89	.99	20.5	6.0	1.90	.76	.91	1.00	19.7	5.8	2.16	.77	.93	1.00
	800	380	22.6	6.6	1.49	.78	.94	1.00	21.9	6.4	1.68	.80	.95	1.00	21.2	6.2	1.90	.81	.96	1.00	20.3	5.9	2.16	.83	.98	1.00
	950	450	23.2	6.8	1.49	.83	.98	1.00	22.5	6.6	1.68	.84	.99	1.00	21.7	6.4	1.90	.86	1.00	1.00	20.9	6.1	2.16	.88	1.00	1.00
67°F (19°C)	650	305	23.2	6.8	1.49	.57	.71	.85	22.5	6.6	1.68	.58	.72	.86	21.7	6.4	1.90	.58	.73	.88	20.8	6.1	2.16	.59	.75	.90
	800	380	23.7	6.9	1.49	.60	.76	.91	23.0	6.7	1.68	.61	.77	.92	22.2	6.5	1.90	.62	.79	.94	21.2	6.2	2.16	.63	.81	.95
	950	450	24.2	7.1	1.50	.63	.81	.96	23.4	6.9	1.69	.64	.82	.97	22.5	6.6	1.90	.65	.84	.98	21.6	6.3	2.16	.66	.86	1.00
71°F (22°C)	650	305	24.7	7.2	1.50	.42	.56	.69	23.9	7.0	1.69	.43	.56	.70	23.0	6.7	1.90	.43	.57	.71	22.1	6.5	2.16	.43	.58	.73
	800	380	25.2	7.4	1.50	.44	.59	.74	24.4	7.2	1.69	.44	.60	.75	23.5	6.9	1.90	.44	.61	.77	22.6	6.6	2.16	.45	.61	.78
	950	450	25.6	7.5	1.50	.45	.62	.79	24.8	7.3	1.69	.45	.63	.80	23.9	7.0	1.90	.46	.64	.82	22.9	6.7	2.16	.46	.65	.84
13ACC-024 — CH23-21 TXV and RFC COOLING CAPACITY																										
63°F (17°C)	650	305	22.9	6.7	1.49	.72	.86	.98	22.1	6.5	1.68	.73	.87	.99	21.3	6.2	1.90	.75	.89	1.00	20.3	5.9	2.16	.76	.91	1.00
	800	380	23.7	6.9	1.50	.77	.92	1.00	22.9	6.7	1.69	.79	.94	1.00	22.0	6.4	1.90	.80	.96	1.00	21.1	6.2	2.16	.82	.98	1.00
	950	450	24.4	7.2	1.50	.81	.97	1.00	23.6	6.9	1.69	.83	.98	1.00	22.7	6.7	1.90	.85	1.00	1.00	21.8	6.4	2.16	.87	1.00	1.00
67°F (19°C)	650	305	24.3	7.1	1.50	.57	.70	.83	23.5	6.9	1.69	.57	.71	.84	22.6	6.6	1.90	.58	.72	.86	21.6	6.3	2.16	.59	.73	.88
	800	380	25.0	7.3	1.50	.59	.74	.89	24.2	7.1	1.69	.60	.76	.91	23.2	6.8	1.91	.61	.77	.92	22.2	6.5	2.16	.62	.79	.94
	950	450	25.5	7.5	1.51	.62	.80	.95	24.6	7.2	1.69	.63	.81	.96	23.7	6.9	1.91	.64	.83	.98	22.6	6.6	2.16	.65	.85	.99
71°F (22°C)	650	305	26.0	7.6	1.51	.42	.54	.67	25.1	7.4	1.70	.42	.55	.68	24.1	7.1	1.91	.43	.56	.69	23.1	6.8	2.17	.43	.57	.71
	800	380	26.7	7.8	1.51	.43	.57	.72	25.7	7.5	1.70	.44	.59	.74	24.7	7.2	1.92	.44	.60	.75	23.6	6.9	2.17	.44	.61	.77
	950	450	27.1	7.9	1.52	.45	.61	.77	26.2	7.7	1.71	.45	.62	.79	25.2	7.4	1.92	.45	.63	.81	24.0	7.0	2.17	.46	.64	.83
13ACC-024 — CH23-31 TXV and RFC COOLING CAPACITY																										
63°F (17°C)	650	305	23.1	6.8	1.50	.72	.86	.98	22.3	6.5	1.69	.73	.87	.99	21.4	6.3	1.90	.74	.89	1.00	20.5	6.0	2.16	.76	.91	1.00
	800	380	23.9	7.0	1.50	.77	.92	1.00	23.1	6.8	1.69	.78	.94	1.00	22.2	6.5	1.90	.79	.96	1.00	21.3	6.2	2.16	.81	.97	1.00
	950	450	24.6	7.2	1.50	.81	.97	1.00	23.8	7.0	1.69	.83	.99	1.00	23.0	6.7	1.91	.85	1.00	1.00	22.0	6.4	2.16	.87	1.00	1.00
67°F (19°C)	650	305	24.6	7.2	1.50	.56	.69	.83	23.7	6.9	1.69	.57	.71	.84	22.8	6.7	1.91	.58	.72	.86	21.8	6.4	2.16	.59	.73	.88
	800	380	25.3	7.4	1.51	.59	.74	.89	24.4	7.2	1.70	.60	.76	.91	23.5	6.9	1.91	.61	.77	.93	22.4	6.6	2.16	.62	.79	.94
	950	450	25.8	7.6	1.51	.62	.80	.95	24.9	7.3	1.70	.63	.81	.96	23.9	7.0	1.91	.64	.83	.98	22.9	6.7	2.17	.65	.85	.99
71°F (22°C)	650	305	26.2	7.7	1.51	.42	.54	.67	25.3	7.4	1.70	.42	.55	.68	24.4	7.2	1.92	.43	.56	.69	23.3	6.8	2.17	.43	.57	.71
	800	380	27.0	7.9	1.52	.43	.58	.72	26.0	7.6	1.71	.43	.58	.73	25.0	7.3	1.92	.44	.59	.75	23.9	7.0	2.17	.44	.60	.77
	950	450	27.5	8.1	1.53	.44	.61	.77	26.5	7.8	1.71	.45	.62	.79	25.4	7.4	1.92	.45	.63	.81	24.3	7.1	2.18	.46	.64	.83
13ACC-024 — CH33-24/30A-2F TXV and RFC COOLING CAPACITY																										
63°F (17°C)	650	305	23.9	7.0	1.50	.72	.87	.98	23.1	6.8	1.69	.73	.88	.99	22.2	6.5	1.91	.74	.90	1.00	21.3	6.2	2.17	.76	.91	1.00
	800	380	24.7	7.2	1.51	.77	.93	1.00	23.9	7.0	1.70	.79	.94	1.00	23.0	6.7	1.91	.80	.96	1.00	22.0	6.4	2.17	.82	.98	1.00
	950	450	25.4	7.4	1.51	.82	.98	1.00	24.6	7.2	1.70	.84	.99	1.00	23.7	6.9	1.91	.85	1.00	1.00	22.8	6.7	2.17	.87	1.00	1.00
67°F (19°C)	650	305	25.4	7.4	1.51	.57	.70	.83	24.5	7.2	1.70	.57	.71	.85	23.6	6.9	1.91	.58	.72	.86	22.6	6.6	2.17	.59	.74	.88
	800	380	26.1	7.6	1.51	.60	.75	.90	25.2	7.4	1.70	.60	.76	.91	24.2	7.1	1.92	.61	.78	.93	23.1	6.8	2.18	.62	.80	.95
	950	450	26.6	7.8	1.52	.62	.80	.95	25.7	7.5	1.71	.63	.81	.97	24.7	7.2	1.92	.64	.83	.98	23.6	6.9	2.18	.66	.85	1.00
71°F (22°C)	650	305	27.1	7.9	1.52	.42	.55	.67	26.2	7.7	1.71	.42	.56	.68	25.2	7.4	1.92	.43	.56	.70	24.1	7.1	2.18	.43	.57	.71
	800	380	27.8	8.1	1.52	.43	.58	.73	26.8	7.9	1.71	.44	.59	.74	25.8	7.6	1.93	.44	.60	.76	24.6	7.2	2.19	.44	.61	.77
	950	450	28.3	8.3	1.53	.44	.61	.78	27.3	8.0	1.72	.45	.62	.79	26.2	7.7	1.93	.45	.63	.81	25.1	7.4	2.18	.46	.65	.83
13ACC-024 — CH33-36A/B/C-2F TXV and RFC COOLING CAPACITY																										
63°F (17°C)	650	305	24.1	7.1	1.51	.71	.85	.97	23.3	6.8	1.70	.72	.86	.99	22.4	6.6	1.91	.73	.88	1.00	21.4	6.3	2.17	.75	.90	1.00
	800	380	25.0	7.3	1.51	.76	.91	1.00	24.1	7.1	1.70	.77	.93	1.00	23.2	6.8	1.91	.78	.95	1.00	22.2	6.5	2.17	.81	.97	1.00
	950	450	25.7	7.5	1.51	.80	.97	1.00	24.8	7.3	1.70	.82	.98	1.00	23.9	7.0	1.92	.84	1.00	1.00	23.0	6.7	2.18	.86	1.00	1.00
67°F (19°C)	650	305	25.7	7.5	1.52	.56	.69	.82	24.8	7.3	1.70	.57	.70	.83	23.9	7.0	1.92	.57	.71	.85	22.8	6.7	2.17	.58	.73	.87
	800	380	26.5	7.8	1.52	.59	.74	.88	25.6	7.5	1.71	.59	.75	.90	24.6	7.2	1.92	.60	.76	.92	23.5	6.9	2.18	.61	.78	.94
	950	450	27.1	7.9	1.52	.61	.78	.94	26.1	7.6	1.71	.62	.80	.96	25.1	7.4	1.93	.63	.81	.98	23.9	7.0	2.18	.64	.84	.99
71°F (22°C)	650	305	27.5	8.1	1.53	.42	.54	.66	26.5	7.8	1.71	.42	.55	.67	25.5	7.5	1.93	.42	.56	.68	24.4	7.2	2.18	.43	.56	.70
	800	380	28.3	8.3	1.53	.43	.57	.71	27.3	8.0	1.72	.43	.58	.72	26.2	7.7	1.93	.43	.59	.74	25.0	7.3	2.19	.44	.60	.75
	950	450	28.9	8.5	1.54	.44	.60	.76	27.8	8.1	1.72	.45	.61	.78	26.7	7.8	1.94	.45	.62	.80	25.5	7.5	2.19	.45	.63	.81
13ACC-024 — CH23-41 TXV and RFC COOLING CAPACITY																										
63°F (17°C)	650	305	24.3	7.1	1.50	.72	.86	.98	23.5	6.9	1.69	.73	.87	1.00	22.5	6.6	1.90	.74	.89	1.00	21.5	6.3	2.16	.75	.91	1.00
	800	380	25.2	7.4	1.51	.77	.93	1.00	24.3	7.1	1.70	.78	.94	1.00	23.4	6.9	1.91	.80	.96	1.00	22.4	6.6	2.17	.82	.98	1.00
	950	450	26.0	7.6	1.51	.82	.98	1.00	25.1	7.4	1.70	.84	1.00	1.00	24.2	7.1	1.91	.86	1.00	1.00	23.3	6.8	2.17	.88	1.00	1.00
67°F (19°C)	650	305	25.9	7.6	1.51	.56	.69	.82	25.0	7.3	1.70	.57	.70	.84	24.0	7.0	1.91	.57	.72	.86	22.9	6.7	2.17	.58	.73	.88
	800	380	26.7	7.8	1.52	.59	.75	.90	25.8	7.6	1.71	.60	.76	.91	24.7	7.2	1.92	.61	.77	.93	23.6	6.9	2.17	.62	.79	.96
	950	450	27.3	8.0	1.53	.62	.80	.95	26.3	7.7	1.71	.63	.82	.97	25.2	7.4	1.92	.64	.84	.99	24.1	7.1	2.18	.66	.85	1.00
71°F (22°C)	650	305	27.7	8.1	1.53	.42	.54	.66	26.7	7.8	1.71	.42	.55	.68	25.7	7.5	1.92	.42	.56	.69	24.5	7.2	2.18	.43	.57	.71
	800	380	28.5	8.4	1.53	.43	.58	.72	27.5	8.1	1.72	.44	.58	.73	26.4	7.7	1.93	.44	.60	.75	25.1	7.4	2.18	.45	.61	.77
	950	450	29.1	8.5	1.54	.44	.61	.78	28.0	8.2	1.72	.45	.62	.79	26.8	7.9	1.93	.45	.64	.81	25.6	7.5	2.19	.46	.65	.83

NOTE - For Temperatures and Capacities not shown in tables, see bulletin - Cooling Unit Rating Table Correction Factor Data in Miscellaneous Engineering Data section.

Entering Wet Bulb Temperature	Total Air Volume		Outdoor Air Temperature Entering Outdoor Coil																							
			85°F (29°C)						95°F (35°C)						105°F (41°C)						115°F (46°C)					
			Total Cooling Capacity		Comp Motor kW Input	Sensible To Total Ratio (S/T) Dry Bulb			Total Cooling Capacity		Comp Motor kW Input	Sensible To Total Ratio (S/T) Dry Bulb			Total Cooling Capacity		Comp Motor kW Input	Sensible To Total Ratio (S/T) Dry Bulb			Total Cooling Capacity		Comp Motor kW Input	Sensible To Total Ratio (S/T) Dry Bulb		
	cfm	L/s	kBtuh	kW		75°F 24°C	80°F 27°C	85°F 29°C	kBtuh	kW		75°F 24°C	80°F 27°C	85°F 29°C	kBtuh	kW		75°F 24°C	80°F 27°C	85°F 29°C	kBtuh	kW		75°F 24°C	80°F 27°C	85°F 29°C
13ACC-024 — CH33-42B-2F TXV and RFC COOLING CAPACITY																										
63°F (17°C)	650	305	24.6	7.2	1.51	.71	.85	.97	23.7	6.9	1.70	.72	.86	.99	22.8	6.7	1.91	.73	.88	1.00	21.8	6.4	2.17	.75	.90	1.00
	800	380	25.5	7.5	1.52	.76	.91	1.00	24.6	7.2	1.70	.77	.93	1.00	23.6	6.9	1.92	.79	.95	1.00	22.6	6.6	2.18	.81	.97	1.00
	950	450	26.3	7.7	1.52	.81	.97	1.00	25.4	7.4	1.71	.82	.98	1.00	24.4	7.2	1.92	.84	1.00	1.00	23.4	6.9	2.18	.86	1.00	1.00
67°F (19°C)	650	305	26.3	7.7	1.52	.56	.69	.82	25.4	7.4	1.71	.56	.69	.83	24.4	7.2	1.92	.57	.71	.85	23.2	6.8	2.18	.58	.73	.87
	800	380	27.2	8.0	1.53	.58	.73	.88	26.2	7.7	1.71	.59	.74	.90	25.1	7.4	1.93	.60	.76	.92	23.9	7.0	2.18	.61	.78	.94
	950	450	27.8	8.1	1.53	.61	.78	.94	26.7	7.8	1.72	.62	.80	.96	25.6	7.5	1.93	.63	.82	.98	24.4	7.2	2.19	.65	.84	.99
71°F (22°C)	650	305	28.1	8.2	1.53	.42	.54	.66	27.1	7.9	1.72	.42	.55	.67	26.1	7.6	1.93	.42	.55	.68	24.9	7.3	2.19	.43	.56	.70
	800	380	29.0	8.5	1.54	.43	.57	.71	27.9	8.2	1.73	.43	.58	.72	26.8	7.9	1.94	.44	.59	.74	25.6	7.5	2.19	.44	.60	.75
	950	450	29.6	8.7	1.55	.44	.60	.76	28.5	8.4	1.73	.44	.61	.78	27.3	8.0	1.95	.45	.62	.80	26.0	7.6	2.20	.45	.64	.81
13ACC-024 — CH33-24/30A-2F TXV with G60UHV-36A-070 COOLING CAPACITY																										
63°F (17°C)	710	335	24.4	7.2	1.51	.74	.89	1.00	23.5	6.9	1.70	.76	.91	1.00	22.6	6.6	1.92	.77	.93	1.00	21.7	6.4	2.18	.79	.94	1.00
	860	405	25.1	7.4	1.52	.79	.95	1.00	24.3	7.1	1.71	.80	.96	1.00	23.4	6.9	1.92	.82	.98	1.00	22.4	6.6	2.18	.84	1.00	1.00
	1010	475	25.8	7.6	1.52	.84	.99	1.00	25.0	7.3	1.71	.85	1.00	1.00	24.1	7.1	1.93	.87	1.00	1.00	23.2	6.8	2.18	.89	1.00	1.00
67°F (19°C)	710	335	25.8	7.6	1.52	.58	.72	.86	24.9	7.3	1.71	.58	.73	.87	24.0	7.0	1.93	.59	.74	.89	22.9	6.7	2.19	.60	.76	.91
	860	405	26.4	7.7	1.52	.61	.77	.92	25.5	7.5	1.71	.61	.78	.94	24.5	7.2	1.93	.62	.80	.95	23.4	6.9	2.19	.63	.82	.97
	1010	475	26.9	7.9	1.53	.64	.82	.97	26.0	7.6	1.72	.64	.83	.98	25.0	7.3	1.93	.66	.85	.99	23.8	7.0	2.19	.67	.87	1.00
71°F (22°C)	710	335	27.5	8.1	1.53	.43	.56	.69	26.6	7.8	1.72	.43	.57	.71	25.5	7.5	1.94	.43	.58	.72	24.4	7.2	2.19	.43	.59	.74
	860	405	28.1	8.2	1.53	.44	.59	.75	27.1	7.9	1.72	.44	.60	.76	26.1	7.6	1.94	.44	.61	.78	24.9	7.3	2.20	.45	.62	.80
	1010	475	28.5	8.4	1.54	.45	.63	.80	27.5	8.1	1.73	.45	.63	.81	26.4	7.7	1.94	.46	.65	.83	25.3	7.4	2.20	.46	.66	.85
13ACC-024 — CH33-36A/B-2F TXV with G60UHV-36A/B COOLING CAPACITY																										
63°F (17°C)	710	335	24.6	7.2	1.51	.73	.87	.99	23.7	6.9	1.70	.74	.89	1.00	22.8	6.7	1.91	.75	.91	1.00	21.8	6.4	2.17	.77	.93	1.00
	860	405	25.4	7.4	1.51	.78	.93	1.00	24.5	7.2	1.70	.79	.95	1.00	23.6	6.9	1.92	.81	.97	1.00	22.5	6.6	2.17	.83	.99	1.00
	1010	475	26.1	7.6	1.52	.82	.98	1.00	25.2	7.4	1.70	.84	1.00	1.00	24.3	7.1	1.92	.86	1.00	1.00	23.4	6.9	2.18	.88	1.00	1.00
67°F (19°C)	710	335	26.2	7.7	1.52	.57	.71	.84	25.3	7.4	1.71	.58	.72	.86	24.3	7.1	1.92	.58	.73	.88	23.2	6.8	2.18	.59	.75	.90
	860	405	26.9	7.9	1.52	.60	.75	.90	25.9	7.6	1.71	.60	.77	.92	24.9	7.3	1.92	.61	.78	.94	23.8	7.0	2.18	.63	.80	.97
	1010	475	27.4	8.0	1.53	.62	.80	.96	26.4	7.7	1.71	.63	.82	.97	25.3	7.4	1.93	.65	.84	.99	24.2	7.1	2.19	.66	.86	1.00
71°F (22°C)	710	335	28.0	8.2	1.53	.42	.55	.68	27.0	7.9	1.72	.43	.56	.69	25.9	7.6	1.93	.43	.57	.71	24.8	7.3	2.19	.43	.57	.72
	860	405	28.6	8.4	1.54	.44	.58	.73	27.6	8.1	1.72	.44	.59	.74	26.5	7.8	1.94	.44	.60	.76	25.3	7.4	2.19	.45	.61	.78
	1010	475	29.1	8.5	1.54	.45	.61	.78	28.1	8.2	1.72	.45	.62	.79	27.0	7.9	1.94	.45	.63	.81	25.7	7.5	2.19	.46	.65	.84
13ACC-024 — CH33-42B-2F TXV with G60UHV-36B-090 COOLING CAPACITY																										
63°F (17°C)	710	335	25.1	7.4	1.51	.73	.88	1.00	24.2	7.1	1.70	.74	.89	1.00	23.2	6.8	1.92	.75	.91	1.00	22.2	6.5	2.18	.77	.93	1.00
	860	405	25.9	7.6	1.52	.78	.94	1.00	25.0	7.3	1.71	.79	.95	1.00	24.0	7.0	1.92	.81	.97	1.00	23.0	6.7	2.18	.83	.99	1.00
	1010	475	26.7	7.8	1.52	.83	.98	1.00	25.8	7.6	1.71	.84	1.00	1.00	24.9	7.3	1.92	.86	1.00	1.00	23.9	7.0	2.18	.88	1.00	1.00
67°F (19°C)	710	335	26.8	7.9	1.52	.57	.71	.84	25.8	7.6	1.71	.58	.72	.86	24.8	7.3	1.93	.58	.73	.87	23.6	6.9	2.18	.59	.75	.90
	860	405	27.5	8.1	1.53	.60	.75	.91	26.5	7.8	1.72	.61	.77	.92	25.4	7.4	1.93	.62	.78	.95	24.2	7.1	2.19	.63	.81	.97
	1010	475	28.1	8.2	1.53	.63	.80	.96	27.0	7.9	1.72	.63	.82	.98	25.9	7.6	1.93	.65	.84	.99	24.7	7.2	2.19	.66	.86	1.00
71°F (22°C)	710	335	28.6	8.4	1.54	.42	.55	.68	27.6	8.1	1.72	.43	.56	.69	26.5	7.8	1.94	.43	.57	.70	25.3	7.4	2.19	.43	.58	.72
	860	405	29.3	8.6	1.54	.44	.58	.73	28.2	8.3	1.73	.44	.59	.74	27.1	7.9	1.94	.44	.60	.76	25.9	7.6	2.20	.44	.61	.78
	1010	475	29.9	8.8	1.55	.44	.61	.78	28.7	8.4	1.73	.45	.62	.80	27.6	8.1	1.95	.45	.63	.82	26.3	7.7	2.20	.46	.65	.84
13ACC-024 — CB28UH-030 - CB29M-31 COOLING CAPACITY																										
63°F (17°C)	600	285	22.9	6.7	1.53	.71	.83	.94	22.1	6.5	1.72	.71	.84	.96	21.3	6.2	1.95	.72	.86	.97	20.3	5.9	2.23	.74	.88	.99
	800	380	24.1	7.1	1.52	.76	.91	1.00	23.2	6.8	1.72	.78	.93	1.00	22.4	6.6	1.95	.79	.94	1.00	21.4	6.3	2.22	.81	.96	1.00
	1000	470	25.0	7.3	1.52	.82	.97	1.00	24.2	7.1	1.71	.84	.98	1.00	23.3	6.8	1.94	.85	1.00	1.00	22.4	6.6	2.21	.87	1.00	1.00
67°F (19°C)	600	285	24.5	7.2	1.52	.56	.67	.80	23.6	6.9	1.72	.56	.69	.81	22.7	6.7	1.94	.57	.70	.82	21.7	6.4	2.21	.57	.71	.84
	800	380	25.5	7.5	1.52	.59	.74	.88	24.6	7.2	1.71	.60	.75	.90	23.7	6.9	1.94	.60	.76	.91	22.6	6.6	2.21	.62	.78	.93
	1000	470	26.2	7.7	1.52	.63	.80	.95	25.3	7.4	1.71	.63	.81	.96	24.3	7.1	1.93	.65	.83	.98	23.2	6.8	2.20	.66	.85	.99
71°F (22°C)	600	285	26.2	7.7	1.52	.42	.53	.65	25.3	7.4	1.71	.42	.54	.66	24.4	7.2	1.93	.43	.55	.67	23.3	6.8	2.20	.43	.55	.68
	800	380	27.3	8.0	1.52	.43	.57	.71	26.3	7.7	1.71	.44	.58	.73	25.3	7.4	1.93	.44	.59	.74	24.2	7.1	2.19	.44	.60	.76
	1000	470	27.9	8.2	1.51	.45	.61	.78	27.0	7.9	1.70	.45	.62	.79	25.9	7.6	1.92	.46	.63	.81	24.8	7.3	2.19	.46	.65	.83
13ACC-024 — CB30M-21/26 - CB30U-21/26 COOLING CAPACITY																										
63°F (17°C)	600	285	23.5	6.9	1.54	.70	.83	.95	22.7	6.7	1.73	.71	.84	.96	21.8	6.4	1.96	.72	.86	.97	20.8	6.1	2.24	.73	.88	.99
	800	380	24.8	7.3	1.53	.76	.91	1.00	24.0	7.0	1.73	.77	.93	1.00	23.0	6.7	1.96	.79	.94	1.00	22.0	6.4	2.23	.81	.96	1.00
	1000	470	25.8	7.6	1.53	.82	.98	1.00	24.9	7.3	1.72	.84	.99	1.00	24.1	7.1	1.95	.86	1.00	1.00	23.1	6.8	2.22	.88	1.00	1.00
67°F (19°C)	600	285	25.2	7.4	1.53	.56	.67	.79	24.4	7.2	1.73	.56	.68	.80	23.4	6.9	1.95	.56	.69	.82	22.4	6.6	2.22	.57	.71	.84
	800	380	26.4	7.7	1.53	.59	.73	.88	25.5	7.5	1.72	.60	.75	.89	24.5	7.2	1.95	.60	.76	.91	23.4	6.9	2.22	.61	.78	.93
	1000v	470	27.2	8.0	1.53	.63	.80	.95	26.2	7.7	1.72	.63	.81	.97	25.2	7.4	1.94	.65	.83	.98	24.0	7.0	2.21	.66	.85	1.00
71°F (22°C)	600	285	27.0	7.9	1.53	.42	.53	.65	26.1	7.6	1.72	.43	.54	.66	25.1	7.4	1.94	.43	.55	.67	24.0	7.0	2.21	.43	.55	.68
	800	380	28.2	8.3	1.53	.43	.57	.71	27.3	8.0	1.72	.44	.58	.72	26.2	7.7	1.94	.44	.59	.74	25.0	7.3	2.20	.44	.60	.76
	1000	470	29.0	8.5	1.53	.45	.61	.78	28.0	8.2	1.72	.45	.62	.79	26.9	7.9	1.94	.45	.63	.81	25.6	7.5	2.20	.46	.65	.83
13ACC-024 — CB30M-31 - CB30U-31 COOLING CAPACITY																										
63°F (17°C)	600	285	23.7	6.9	1.54	.70	.83	.94	22.9	6.7	1.73	.71	.84	.96	22.0	6.4	1.96	.72	.85	.98	21.0	6.2	2.23	.73	.87	.99
	800	380	25.1	7.4	1.53	.76	.91	1.00	24.2	7.1	1.73	.78	.93	1.00	23.2	6.8	1.95	.78	.94	1.00	22.2	6.5	2.22	.80	.96	1.00
	1000	470	26.1	7.6	1.53	.82	.98	1.00	25.2	7.4	1.72	.83	.99	1.00	24.3	7.1	1.95	.85	1.00	1.00	23.3	6.8	2.21	.88	1.00	1.00
67°F (19°C)	600	285	25.5	7.5	1.53	.55	.67	.79	24.6	7.2	1.72	.56	.68	.80	23.6	6.9	1.95	.56	.69	.81	22.6	6.6	2.22	.57	.70	.84
	800	380	26.7	7.8	1.53	.59	.73	.87	25.8	7.6	1.72	.59	.74	.89	24.8	7.3	1.94	.60	.76	.91	23.6	6.9	2.21	.61	.78	.93
	1000	470	27.6	8.1	1.53	.63	.80	.95	26.5	7.8	1.72	.63	.82	.97	25.5	7.5	1.94	.65	.83	.98	24.3	7.1	2.20	.66	.85	1.00
71°F (22°C)	600	285	27.3	8.0	1.53	.42	.53	.64	26.4	7.7	1.72	.42	.54	.65	25.4	7.4	1.94	.43	.54	.66	24.3	7.1	2.21	.42	.55	.67
	800	380	28.6	8.4	1.53	.43	.57	.71	27.6	8.1	1.72	.43	.58	.72	26.5	7.8	1.94	.44	.59	.74	25.3	7.4	2.20	.44	.60	.75
	1000	470	29.4	8.6	1.53	.45	.61	.78	28.3	8.3	1.72	.45	.62	.79	27.2	8.0	1.93	.46	.63	.81	25.9	7.6	2.19	.46	.65	.83

RATINGS — 2 TON

NOTE - For Temperatures and Capacities not shown in tables, see bulletin - Cooling Unit Rating Table Correction Factor Data in Miscellaneous Engineering Data section.

Entering Wet Bulb Temperature	Total Air Volume		Outdoor Air Temperature Entering Outdoor Coil																							
			85°F (29°C)						95°F (35°C)						105°F (41°C)						115°F (46°C)					
			Total Cooling Capacity		Comp Motor kW Input	Sensible To Total Ratio (S/T) Dry Bulb			Total Cooling Capacity		Comp Motor kW Input	Sensible To Total Ratio (S/T) Dry Bulb			Total Cooling Capacity		Comp Motor kW Input	Sensible To Total Ratio (S/T) Dry Bulb			Total Cooling Capacity		Comp Motor kW Input	Sensible To Total Ratio (S/T) Dry Bulb		
	cfm	L/s	kBtuh	kW		75°F 24°C	80°F 27°C	85°F 29°C	kBtuh	kW		75°F 24°C	80°F 27°C	85°F 29°C	kBtuh	kW		75°F 24°C	80°F 27°C	85°F 29°C	kBtuh	kW		75°F 24°C	80°F 27°C	85°F 29°C
13ACC-024 — CVP10-26/EC10Q2 COOLING CAPACITY																										
63°F (17°C)	600	285	22.5	6.6	1.53	.70	.83	.94	21.8	6.4	1.72	.71	.84	.95	20.9	6.1	1.95	.72	.86	.97	20.0	5.9	2.22	.73	.87	.99
	800	380	23.8	7.0	1.52	.76	.91	1.00	23.0	6.7	1.71	.77	.92	1.00	22.1	6.5	1.94	.79	.94	1.00	21.1	6.2	2.21	.81	.96	1.00
	1000	470	24.7	7.2	1.52	.82	.98	1.00	23.9	7.0	1.71	.83	.99	1.00	23.1	6.8	1.93	.85	1.00	1.00	22.1	6.5	2.20	.87	1.00	1.00
67°F (19°C)	600	285	24.1	7.1	1.52	.56	.67	.79	23.3	6.8	1.71	.56	.68	.81	22.4	6.6	1.94	.56	.69	.82	21.4	6.3	2.21	.57	.71	.83
	800	380	25.3	7.4	1.52	.58	.74	.87	24.4	7.2	1.71	.59	.75	.89	23.4	6.9	1.93	.60	.76	.91	22.4	6.6	2.20	.61	.78	.93
	1000	470	26.0	7.6	1.52	.62	.80	.95	25.1	7.4	1.71	.63	.81	.96	24.1	7.1	1.93	.64	.83	.98	23.0	6.7	2.19	.66	.85	1.00
71°F (22°C)	600	285	25.9	7.6	1.52	.42	.53	.64	25.0	7.3	1.71	.42	.54	.65	24.0	7.0	1.93	.43	.55	.67	23.0	6.7	2.19	.43	.55	.68
	800	380	27.0	7.9	1.51	.43	.57	.71	26.1	7.6	1.70	.43	.58	.72	25.1	7.4	1.92	.44	.59	.74	24.0	7.0	2.19	.44	.60	.75
	1000	470	27.8	8.1	1.51	.45	.61	.77	26.8	7.9	1.70	.45	.62	.79	25.7	7.5	1.92	.46	.63	.81	24.6	7.2	2.18	.46	.65	.83

RATINGS — 2.5 TON

Entering Wet Bulb Temperature	Total Air Volume		Outdoor Air Temperature Entering Outdoor Coil																							
			85°F (29°C)						95°F (35°C)						105°F (41°C)						115°F (46°C)					
			Total Cooling Capacity		Comp Motor kW Input	Sensible To Total Ratio (S/T) Dry Bulb			Total Cooling Capacity		Comp Motor kW Input	Sensible To Total Ratio (S/T) Dry Bulb			Total Cooling Capacity		Comp Motor kW Input	Sensible To Total Ratio (S/T) Dry Bulb			Total Cooling Capacity		Comp Motor kW Input	Sensible To Total Ratio (S/T) Dry Bulb		
	cfm	L/s	kBtuh	kW		75°F 24°C	80°F 27°C	85°F 29°C	kBtuh	kW		75°F 24°C	80°F 27°C	85°F 29°C	kBtuh	kW		75°F 24°C	80°F 27°C	85°F 29°C	kBtuh	kW		75°F 24°C	80°F 27°C	85°F 29°C
13ACC-030 — C33-30A/B/C TXV and RFC COOLING CAPACITY																										
63°F (17°C)	850	400	30.5	8.9	1.90	.71	.86	.98	29.5	8.6	2.14	.72	.88	.99	28.5	8.4	2.41	.73	.89	1.00	27.4	8.0	2.72	.75	.91	1.00
	1000	470	31.3	9.2	1.90	.74	.91	1.00	30.3	8.9	2.15	.76	.93	1.00	29.2	8.6	2.41	.77	.94	1.00	28.1	8.2	2.72	.79	.96	1.00
	1150	545	32.1	9.4	1.91	.78	.95	1.00	31.0	9.1	2.15	.80	.97	1.00	29.9	8.8	2.42	.82	.98	1.00	28.8	8.4	2.72	.84	1.00	1.00
67°F (19°C)	850	400	32.4	9.5	1.91	.55	.68	.82	31.3	9.2	2.15	.56	.69	.84	30.2	8.9	2.42	.56	.71	.86	29.0	8.5	2.72	.57	.72	.87
	1000	470	33.1	9.7	1.91	.57	.72	.88	32.0	9.4	2.16	.58	.73	.90	30.8	9.0	2.42	.59	.75	.91	29.5	8.6	2.73	.60	.77	.93
	1150	545	33.7	9.9	1.91	.59	.76	.93	32.5	9.5	2.16	.60	.78	.94	31.3	9.2	2.43	.61	.79	.96	30.0	8.8	2.73	.62	.81	.98
71°F (22°C)	850	400	34.7	10.2	1.92	.41	.53	.66	33.4	9.8	2.16	.41	.54	.67	32.2	9.4	2.43	.41	.55	.68	30.9	9.1	2.73	.42	.56	.70
	1000	470	35.4	10.4	1.92	.42	.56	.70	34.0	10.0	2.17	.42	.57	.71	32.8	9.6	2.44	.42	.57	.73	31.4	9.2	2.74	.43	.59	.74
	1150	545	35.9	10.5	1.92	.43	.58	.74	34.5	10.1	2.17	.43	.59	.75	33.2	9.7	2.44	.43	.60	.77	31.9	9.3	2.74	.44	.61	.79
13ACC-030 — C33-36A/B/C TXV and RFC COOLING CAPACITY																										
63°F (17°C)	850	400	30.9	9.1	1.90	.70	.86	.98	29.8	8.7	2.14	.71	.87	.99	28.8	8.4	2.41	.73	.89	1.00	27.6	8.1	2.72	.74	.91	1.00
	1000	470	31.8	9.3	1.91	.74	.91	1.00	30.7	9.0	2.15	.76	.92	1.00	29.6	8.7	2.41	.77	.95	1.00	28.4	8.3	2.72	.79	.96	1.00
	1150	545	32.5	9.5	1.91	.78	.96	1.00	31.4	9.2	2.15	.80	.97	1.00	30.3	8.9	2.42	.82	.98	1.00	29.2	8.6	2.72	.84	1.00	1.00
67°F (19°C)	850	400	32.9	9.6	1.91	.55	.68	.82	31.7	9.3	2.15	.56	.69	.83	30.5	8.9	2.42	.56	.71	.85	29.3	8.6	2.73	.57	.72	.87
	1000	470	33.7	9.9	1.91	.57	.72	.87	32.4	9.5	2.16	.58	.73	.89	31.2	9.1	2.43	.59	.75	.91	29.9	8.8	2.73	.59	.76	.93
	1150	545	34.3	10.1	1.92	.59	.76	.92	33.0	9.7	2.16	.60	.77	.94	31.7	9.3	2.43	.61	.79	.96	30.4	8.9	2.73	.62	.81	.98
71°F (22°C)	850	400	35.2	10.3	1.92	.41	.53	.65	33.9	9.9	2.17	.41	.54	.67	32.6	9.6	2.44	.42	.55	.68	31.3	9.2	2.74	.42	.56	.69
	1000	470	36.0	10.6	1.92	.42	.55	.69	34.6	10.1	2.18	.42	.56	.71	33.2	9.7	2.44	.43	.58	.72	31.9	9.3	2.74	.43	.58	.74
	1150	545	36.5	10.7	1.92	.43	.58	.73	35.1	10.3	2.18	.43	.59	.75	33.7	9.9	2.45	.43	.60	.77	32.3	9.5	2.75	.44	.61	.79
13ACC-030 — C33-42B TXV and RFC COOLING CAPACITY																										
63°F (17°C)	850	400	30.9	9.1	1.90	.70	.86	.98	29.8	8.7	2.14	.71	.87	.99	28.8	8.4	2.41	.73	.89	1.00	27.6	8.1	2.72	.74	.91	1.00
	1000	470	31.8	9.3	1.91	.74	.91	1.00	30.7	9.0	2.15	.76	.92	1.00	29.6	8.7	2.41	.77	.95	1.00	28.4	8.3	2.72	.79	.96	1.00
	1150	545	32.5	9.5	1.91	.78	.96	1.00	31.4	9.2	2.15	.80	.97	1.00	30.3	8.9	2.42	.82	.98	1.00	29.2	8.6	2.72	.84	1.00	1.00
67°F (19°C)	850	400	32.9	9.6	1.91	.55	.68	.82	31.7	9.3	2.15	.56	.69	.83	30.5	8.9	2.42	.56	.71	.85	29.3	8.6	2.73	.57	.72	.87
	1000	470	33.7	9.9	1.91	.57	.72	.87	32.4	9.5	2.16	.58	.73	.89	31.2	9.1	2.43	.59	.75	.91	29.9	8.8	2.73	.59	.76	.93
	1150	545	34.3	10.1	1.92	.59	.76	.92	33.0	9.7	2.16	.60	.77	.94	31.7	9.3	2.43	.61	.79	.96	30.4	8.9	2.73	.62	.81	.98
71°F (22°C)	850	400	35.2	10.3	1.92	.41	.53	.65	33.9	9.9	2.17	.41	.54	.67	32.6	9.6	2.44	.42	.55	.68	31.3	9.2	2.74	.42	.56	.69
	1000	470	36.0	10.6	1.92	.42	.55	.69	34.6	10.1	2.18	.42	.56	.71	33.2	9.7	2.44	.43	.58	.72	31.9	9.3	2.74	.43	.58	.74
	1150	545	36.5	10.7	1.92	.43	.58	.73	35.1	10.3	2.18	.43	.59	.75	33.7	9.9	2.45	.43	.60	.77	32.3	9.5	2.75	.44	.61	.79
13ACC-030 — C26-31 TXV and RFC COOLING CAPACITY																										
63°F (17°C)	850	400	31.0	9.1	1.91	.70	.85	.98	29.9	8.8	2.15	.71	.87	1.00	28.8	8.4	2.41	.72	.88	1.00	27.6	8.1	2.72	.74	.90	1.00
	1000	470	31.9	9.3	1.91	.74	.90	1.00	30.7	9.0	2.15	.75	.92	1.00	29.6	8.7	2.42	.77	.94	1.00	28.4	8.3	2.72	.78	.96	1.00
	1150	545	32.7	9.6	1.91	.78	.95	1.00	31.5	9.2	2.16	.80	.97	1.00	30.3	8.9	2.43	.81	.99	1.00	29.2	8.6	2.73	.83	1.00	1.00
67°F (19°C)	850	400	33.1	9.7	1.91	.55	.67	.81	31.8	9.3	2.16	.55	.69	.83	30.6	9.0	2.43	.56	.70	.85	29.4	8.6	2.73	.57	.71	.87
	1000	470	33.9	9.9	1.92	.57	.71	.87	32.6	9.6	2.17	.57	.72	.89	31.3	9.2	2.43	.58	.74	.91	30.0	8.8	2.73	.59	.76	.93
	1150	545	34.5	10.1	1.92	.59	.75	.92	33.2	9.7	2.17	.60	.77	.94	31.8	9.3	2.44	.61	.79	.96	30.5	8.9	2.74	.62	.81	.98
71°F (22°C)	850	400	35.4	10.4	1.92	.41	.53	.65	34.0	10.0	2.18	.41	.54	.66	32.7	9.6	2.45	.41	.54	.68	31.4	9.2	2.74	.42	.55	.69
	1000	470	36.2	10.6	1.92	.42	.55	.69	34.8	10.2	2.18	.42	.56	.70	33.4	9.8	2.45	.42	.57	.72	32.0	9.4	2.75	.43	.58	.73
	1150	545	36.9	10.8	1.92	.42	.57	.73	35.4	10.4	2.18	.43	.59	.74	33.9	9.9	2.45	.43	.60	.76	32.4	9.5	2.76	.44	.61	.78
13ACC-030 — C26-41 TXV and RFC COOLING CAPACITY																										
63°F (17°C)	850	400	31.2	9.1	1.91	.70	.85	.98	30.0	8.8	2.15	.71	.87	1.00	28.9	8.5	2.42	.73	.89	1.00	27.7	8.1	2.72	.74	.91	1.00
	1000	470	32.1	9.4	1.91	.74	.91	1.00	30.9	9.1	2.16	.76	.93	1.00	29.7	8.7	2.43	.77	.95	1.00	28.5	8.4	2.73	.79	.97	1.00
	1150	545	32.9	9.6	1.91	.78	.96	1.00	31.7	9.3	2.16	.80	.98	1.00	30.5	8.9	2.43	.82	.99	1.00	29.4	8.6	2.73	.84	1.00	1.00
67°F (19°C)	850	400	33.3	9.8	1.92	.55	.67	.81	32.0	9.4	2.17	.56	.69	.83	30.8	9.0	2.43	.56	.70	.85	29.5	8.6	2.73	.57	.71	.87
	1000	470	34.1	10.0	1.92	.57	.72	.87	32.8	9.6	2.17	.58	.73	.89	31.5	9.2	2.44	.59	.75	.91	30.1	8.8	2.74	.60	.76	.94
	1150	545	34.8	10.2	1.92	.59	.76	.92	33.4	9.8	2.18	.60	.77	.95	32.0	9.4	2.44	.61	.79	.97	30.7	9.0	2.74	.62	.81	.99
71°F (22°C)	850	400	35.6	10.4	1.92	.41	.53	.65	34.2	10.0	2.18	.41	.54	.66	32.9	9.6	2.45	.41	.55	.67	31.5	9.2	2.75	.42	.55	.69
	1000	470	36.5	10.7	1.92	.42	.55	.69	35.0	10.3	2.18	.42	.56	.70	33.6	9.8	2.46	.42	.57	.72	32.1	9.4	2.76	.43	.58	.74
	1150	545	37.1	10.9	1.93	.43	.58	.73	35.6	10.4	2.19	.43	.59	.75	34.1	10.0	2.46	.43	.60	.77	32.6	9.6	2.76	.44	.61	.79
13ACC-030 — C33-38A/B TXV and RFC COOLING CAPACITY																										
63°F (17°C)	850	400	31.7	9.3	1.91	.70	.85	.98	30.5	8.9	2.15	.71	.87	.99	29.4	8.6	2.42	.72	.88	1.00	28.2	8.3	2.72	.73	.90	1.00
	1000	470	32.7	9.6	1.91	.74	.90	1.00	31.4	9.2	2.16	.75	.92	1.00	30.2	8.9	2.43	.77	.94	1.00	29.0	8.5	2.73	.78	.96	1.00
	1150	545	33.5	9.8	1.91	.78	.95	1.00	32.2	9.4	2.16	.79	.97	1.00	31.0	9.1	2.43	.81	.99	1.00	29.8	8.7	2.73	.83	1.00	1.00
67°F (19°C)	850	400	33.9	9.9	1.92	.55	.67	.81	32.6	9.6	2.17	.55	.68	.83	31.3	9.2	2.43	.56	.70	.85	30.0	8.8	2.73	.57	.71	.86
	1000	470	34.7	10.2	1.92	.57	.71	.87	33.4	9.8	2.17	.57	.72	.89	32.0	9.4	2.44	.59	.74	.91	30.7	9.0	2.74	.59	.76	.93
	1150	545	35.4	10.4	1.92	.59	.75	.92	34.0	10.0	2.18	.60	.77	.94	32.6	9.6	2.44	.61	.79	.96	31.2	9.1	2.74	.62	.81	.98
71°F (22°C)	850	400	36.3	10.6	1.92	.41	.53	.65	34.9	10.2	2.18	.41	.53	.66	33.5	9.8	2.45	.41	.54	.67	32.1	9.4	2.75	.42	.55	.68
	1000	470	37.2	10.9	1.92	.42	.55	.69	35.7	10.5	2.18	.42	.56	.70	34.2	10.0	2.46	.42	.57	.72	32.7	9.6	2.76	.43	.58	.73
	1150	545	37.9	11.1	1.93	.42	.57	.72	36.3	10.6	2.19	.43	.58	.74	34.8	10.2	2.46	.43	.60	.76	33.2	9.7	2.76	.44	.61	.79

NOTE - For Temperatures and Capacities not shown in tables, see bulletin - Cooling Unit Rating Table Correction Factor Data in Miscellaneous Engineering Data section.

Entering Wet Bulb Temperature	Total Air Volume		Outdoor Air Temperature Entering Outdoor Coil																							
			85°F (29°C)						95°F (35°C)						105°F (41°C)						115°F (46°C)					
			Total Cooling Capacity		Comp Motor kW Input	Sensible To Total Ratio (S/T) Dry Bulb			Total Cooling Capacity		Comp Motor kW Input	Sensible To Total Ratio (S/T) Dry Bulb			Total Cooling Capacity		Comp Motor kW Input	Sensible To Total Ratio (S/T) Dry Bulb			Total Cooling Capacity		Comp Motor kW Input	Sensible To Total Ratio (S/T) Dry Bulb		
	cfm	L/s	kBtuh	kW		75°F 24°C	80°F 27°C	85°F 29°C	kBtuh	kW		75°F 24°C	80°F 27°C	85°F 29°C	kBtuh	kW		75°F 24°C	80°F 27°C	85°F 29°C	kBtuh	kW		75°F 24°C	80°F 27°C	85°F 29°C
13ACC-030 — C33-30A/B TXV with G60UHV-36A/B COOLING CAPACITY																										
63°F (17°C)	805	380	30.1	8.8	1.90	.70	.84	.97	29.1	8.5	2.14	.71	.86	.98	28.1	8.2	2.41	.72	.87	.99	27.0	7.9	2.73	.73	.89	1.00
	955	450	31.0	9.1	1.91	.73	.90	1.00	30.0	8.8	2.15	.75	.91	1.00	28.9	8.5	2.42	.76	.93	1.00	27.8	8.1	2.73	.78	.95	1.00
	1105	520	31.8	9.3	1.91	.77	.94	1.00	30.7	9.0	2.16	.79	.96	1.00	29.6	8.7	2.42	.81	.98	1.00	28.5	8.4	2.73	.82	.99	1.00
67°F (19°C)	805	380	32.1	9.4	1.91	.54	.67	.81	31.0	9.1	2.15	.55	.68	.82	29.9	8.8	2.42	.56	.69	.84	28.7	8.4	2.73	.56	.71	.85
	955	450	32.9	9.6	1.91	.57	.71	.86	31.7	9.3	2.16	.57	.72	.88	30.5	8.9	2.43	.58	.74	.90	29.3	8.6	2.74	.59	.75	.92
	1105	520	33.5	9.8	1.92	.59	.75	.91	32.2	9.4	2.16	.60	.77	.93	31.0	9.1	2.44	.60	.78	.95	29.8	8.7	2.74	.61	.80	.97
71°F (22°C)	805	380	34.3	10.1	1.92	.41	.53	.65	33.1	9.7	2.17	.41	.53	.66	31.9	9.3	2.44	.41	.54	.67	30.6	9.0	2.74	.41	.55	.68
	955	450	35.1	10.3	1.92	.42	.55	.68	33.8	9.9	2.17	.42	.56	.70	32.5	9.5	2.44	.42	.57	.71	31.2	9.1	2.75	.42	.58	.73
	1105	520	35.7	10.5	1.93	.42	.57	.72	34.3	10.1	2.18	.43	.58	.74	33.0	9.7	2.45	.43	.59	.76	31.7	9.3	2.75	.44	.60	.78
13ACC-030 — C33-42B TXV with G60UHV-36B-090 COOLING CAPACITY																										
63°F (17°C)	805	380	30.4	8.9	1.90	.69	.84	.97	29.3	8.6	2.14	.70	.85	.98	28.3	8.3	2.41	.71	.87	1.00	27.1	7.9	2.72	.73	.89	1.00
	955	450	31.3	9.2	1.91	.73	.89	1.00	30.2	8.9	2.15	.74	.91	1.00	29.1	8.5	2.41	.76	.93	1.00	27.9	8.2	2.72	.78	.95	1.00
	1105	520	32.0	9.4	1.91	.78	.95	1.00	30.9	9.1	2.15	.79	.96	1.00	29.8	8.7	2.42	.81	.98	1.00	28.7	8.4	2.72	.82	.99	1.00
67°F (19°C)	805	380	32.4	9.5	1.91	.54	.67	.80	31.2	9.1	2.15	.55	.68	.82	30.0	8.8	2.42	.56	.69	.83	28.8	8.4	2.73	.56	.70	.85
	955	450	33.2	9.7	1.91	.56	.71	.86	31.9	9.3	2.16	.57	.72	.88	30.7	9.0	2.43	.58	.73	.90	29.5	8.6	2.73	.59	.75	.92
	1105	520	33.8	9.9	1.91	.59	.75	.91	32.5	9.5	2.16	.59	.76	.93	31.3	9.2	2.43	.60	.78	.95	30.0	8.8	2.73	.62	.80	.97
71°F (22°C)	805	380	34.6	10.1	1.92	.41	.53	.64	33.3	9.8	2.17	.41	.53	.65	32.1	9.4	2.44	.41	.54	.67	30.8	9.0	2.74	.41	.55	.68
	955	450	35.5	10.4	1.92	.41	.55	.68	34.1	10.0	2.17	.42	.56	.70	32.8	9.6	2.44	.42	.56	.71	31.4	9.2	2.74	.42	.57	.73
	1105	520	36.1	10.6	1.92	.42	.57	.72	34.7	10.2	2.18	.43	.58	.74	33.3	9.8	2.45	.43	.59	.76	31.9	9.3	2.74	.44	.60	.77
13ACC-030 — C33-36A/B TXV with G60UHV-36A/B COOLING CAPACITY																										
63°F (17°C)	850	400	30.9	9.1	1.90	.70	.86	.98	29.8	8.7	2.14	.71	.87	.99	28.8	8.4	2.41	.73	.89	1.00	27.6	8.1	2.72	.74	.91	1.00
	1000	470	31.8	9.3	1.91	.74	.91	1.00	30.7	9.0	2.15	.76	.92	1.00	29.6	8.7	2.41	.77	.95	1.00	28.4	8.3	2.72	.79	.96	1.00
	1150	545	32.5	9.5	1.91	.78	.96	1.00	31.4	9.2	2.15	.80	.97	1.00	30.3	8.9	2.42	.82	.98	1.00	29.2	8.6	2.72	.84	1.00	1.00
67°F (19°C)	850	400	32.9	9.6	1.91	.55	.68	.82	31.7	9.3	2.15	.56	.69	.83	30.5	8.9	2.42	.56	.71	.85	29.3	8.6	2.73	.57	.72	.87
	1000	470	33.7	9.9	1.91	.57	.72	.87	32.4	9.5	2.16	.58	.73	.89	31.2	9.1	2.43	.59	.75	.91	29.9	8.8	2.73	.59	.76	.93
	1150	545	34.3	10.1	1.92	.59	.76	.92	33.0	9.7	2.16	.60	.77	.94	31.7	9.3	2.43	.61	.79	.96	30.4	8.9	2.73	.62	.81	.98
71°F (22°C)	850	400	35.2	10.3	1.92	.41	.53	.65	33.9	9.9	2.17	.41	.54	.67	32.6	9.6	2.44	.42	.55	.68	31.3	9.2	2.74	.42	.56	.69
	1000	470	36.0	10.6	1.92	.42	.55	.69	34.6	10.1	2.18	.42	.56	.71	33.2	9.7	2.44	.43	.58	.72	31.9	9.3	2.74	.43	.58	.74
	1150	545	36.5	10.7	1.92	.43	.58	.73	35.1	10.3	2.18	.43	.59	.75	33.7	9.9	2.45	.43	.60	.77	32.3	9.5	2.75	.44	.61	.79
13ACC-030 — C33-38A/B TXV with G60UHV-36A/B COOLING CAPACITY																										
63°F (17°C)	805	380	31.5	9.2	1.91	.69	.83	.96	30.3	8.9	2.15	.70	.85	.98	29.2	8.6	2.42	.71	.86	1.00	28.0	8.2	2.72	.72	.89	1.00
	955	450	32.5	9.5	1.91	.73	.89	1.00	31.3	9.2	2.15	.74	.91	1.00	30.1	8.8	2.42	.75	.93	1.00	28.9	8.5	2.73	.77	.94	1.00
	1105	520	33.4	9.8	1.91	.77	.94	1.00	32.1	9.4	2.16	.78	.96	1.00	30.9	9.1	2.43	.80	.98	1.00	29.7	8.7	2.73	.82	.99	1.00
67°F (19°C)	805	380	33.7	9.9	1.91	.54	.66	.79	32.4	9.5	2.16	.55	.67	.81	31.2	9.1	2.43	.55	.68	.83	29.9	8.8	2.73	.56	.70	.85
	955	450	34.6	10.1	1.92	.56	.70	.85	33.3	9.8	2.17	.57	.71	.87	32.0	9.4	2.44	.58	.73	.89	30.6	9.0	2.74	.58	.74	.91
	1105	520	35.4	10.4	1.92	.58	.74	.90	34.0	10.0	2.18	.59	.76	.92	32.6	9.6	2.45	.60	.78	.95	31.2	9.1	2.74	.61	.79	.97
71°F (22°C)	805	380	36.1	10.6	1.92	.41	.52	.64	34.7	10.2	2.18	.41	.53	.65	33.4	9.8	2.45	.41	.53	.66	32.0	9.4	2.75	.41	.54	.67
	955	450	37.1	10.9	1.92	.41	.54	.67	35.6	10.4	2.18	.42	.55	.69	34.2	10.0	2.45	.42	.56	.70	32.7	9.6	2.75	.42	.57	.72
	1105	520	37.8	11.1	1.93	.42	.57	.71	36.3	10.6	2.19	.43	.58	.73	34.8	10.2	2.46	.43	.59	.75	33.2	9.7	2.76	.43	.60	.77
13ACC-030 — CR26-36N/W-F TXV and RFC COOLING CAPACITY																										
63°F (17°C)	850	400	31.0	9.1	1.91	.70	.85	.98	29.9	8.8	2.15	.71	.86	1.00	28.8	8.4	2.41	.72	.88	1.00	27.6	8.1	2.72	.74	.90	1.00
	1000	470	31.9	9.3	1.91	.74	.90	1.00	30.7	9.0	2.15	.75	.92	1.00	29.6	8.7	2.42	.76	.94	1.00	28.4	8.3	2.72	.79	.96	1.00
	1150	545	32.7	9.6	1.91	.78	.95	1.00	31.5	9.2	2.16	.80	.97	1.00	30.3	8.9	2.43	.81	.99	1.00	29.2	8.6	2.73	.83	1.00	1.00
67°F (19°C)	850	400	33.1	9.7	1.91	.55	.67	.81	31.8	9.3	2.16	.55	.69	.83	30.6	9.0	2.43	.56	.70	.85	29.3	8.6	2.73	.57	.71	.87
	1000	470	33.9	9.9	1.92	.57	.71	.87	32.6	9.6	2.17	.57	.72	.89	31.3	9.2	2.44	.58	.74	.91	30.0	8.8	2.73	.59	.76	.93
	1150	545	34.5	10.1	1.92	.59	.75	.92	33.2	9.7	2.17	.60	.77	.94	31.8	9.3	2.44	.61	.79	.96	30.5	8.9	2.74	.62	.81	.98
71°F (22°C)	850	400	35.4	10.4	1.92	.41	.53	.65	34.0	10.0	2.18	.41	.54	.66	32.7	9.6	2.45	.41	.54	.67	31.4	9.2	2.74	.42	.55	.69
	1000	470	36.2	10.6	1.92	.42	.55	.69	34.8	10.2	2.18	.42	.56	.70	33.4	9.8	2.45	.42	.57	.72	32.0	9.4	2.75	.43	.58	.73
	1150	545	36.9	10.8	1.92	.42	.57	.73	35.4	10.4	2.18	.43	.59	.74	33.9	9.9	2.46	.43	.60	.76	32.4	9.5	2.76	.44	.61	.78
13ACC-030 — CR26-36N-F TXV with G60DFV-36A-070 COOLING CAPACITY																										
63°F (17°C)	805	380	30.8	9.0	1.91	.69	.83	.97	29.8	8.7	2.15	.70	.85	.98	28.7	8.4	2.42	.71	.87	.99	27.6	8.1	2.73	.73	.88	1.00
	955	450	31.7	9.3	1.91	.73	.89	1.00	30.6	9.0	2.16	.74	.91	1.00	29.5	8.6	2.43	.75	.93	1.00	28.4	8.3	2.73	.77	.94	1.00
	1105	520	32.5	9.5	1.92	.77	.94	1.00	31.4	9.2	2.16	.78	.95	1.00	30.3	8.9	2.43	.80	.97	1.00	29.1	8.5	2.73	.82	.99	1.00
67°F (19°C)	805	380	32.9	9.6	1.91	.54	.67	.80	31.7	9.3	2.16	.55	.68	.81	30.5	8.9	2.43	.55	.69	.83	29.3	8.6	2.74	.56	.70	.85
	955	450	33.7	9.9	1.92	.56	.70	.85	32.5	9.5	2.17	.57	.71	.87	31.2	9.1	2.44	.58	.73	.89	30.0	8.8	2.74	.59	.75	.91
	1105	520	34.3	10.1	1.92	.58	.74	.90	33.0	9.7	2.17	.59	.76	.92	31.8	9.3	2.44	.60	.77	.94	30.5	8.9	2.74	.61	.79	.96
71°F (22°C)	805	380	35.2	10.3	1.92	.41	.52	.64	33.9	9.9	2.17	.41	.53	.65	32.6	9.6	2.44	.41	.54	.66	31.3	9.2	2.75	.41	.55	.67
	955	450	36.0	10.6	1.93	.41	.55	.68	34.6	10.1	2.18	.42	.55	.69	33.3	9.8	2.45	.42	.56	.71	32.0	9.4	2.75	.42	.57	.72
	1105	520	36.6	10.7	1.93	.42	.57	.72	35.2	10.3	2.18	.43	.58	.73	33.8	9.9	2.46	.43	.59	.75	32.5	9.5	2.76	.43	.60	.77
13ACC-030 — CR26-36W-F TXV with G60DFV-36B-090 COOLING CAPACITY																										
63°F (17°C)	805	380	31.0	9.1	1.91	.69	.84	.97	29.9	8.8	2.15	.70	.85	.98	28.9	8.5	2.42	.71	.87	.99	27.7	8.1	2.73	.72	.89	1.00
	955	450	31.9	9.3	1.91	.73	.89	1.00	30.8	9.0	2.16	.74	.91	1.00	29.7	8.7	2.43	.76	.93	1.00	28.6	8.4	2.73	.77	.94	1.00
	1105	520	32.7	9.6	1.92	.77	.94	1.00	31.6	9.3	2.16	.78	.95	1.00	30.5	8.9	2.43	.80	.97	1.00	29.3	8.6	2.73	.82	.99	1.00
67°F (19°C)	805	380	33.1	9.7	1.91	.54	.66	.80	31.9	9.3	2.16	.55	.68	.81	30.7	9.0	2.43	.55	.69	.83	29.5	8.6	2.74	.56	.70	.85
	955	450	33.9	9.9	1.92	.56	.70	.85	32.7	9.6	2.17	.57	.71	.87	31.4	9.2	2.44	.58	.73	.89	30.2	8.9	2.74	.59	.74	.91
	1105	520	34.6	10.1	1.92	.58	.74	.91	33.3	9.8	2.17	.59	.76	.92	32.0	9.4	2.44	.60	.78	.94	30.7	9.0	2.74	.61	.79	.96
71°F (22°C)	805	380	35.4	10.4	1.92	.41	.52	.64	34.1	10.0	2.17	.41	.53	.65	32.8	9.6	2.44	.41	.54	.66	31.5	9.2	2.75	.41	.55	.68
	955	450	36.2	10.6	1.93	.41	.55	.68	34.9	10.2	2.18	.42	.55	.69	33.5	9.8	2.45	.42	.56	.70	32.2	9.4	2.75	.42	.57	.72
	1105	520	36.9	10.8	1.93	.42	.57	.72	35.5	10.4	2.18	.43	.58	.73	34.1	10.0	2.46	.43	.59	.75	32.7	9.6	2.76	.43	.60	.77

NOTE - For Temperatures and Capacities not shown in tables, see bulletin - Cooling Unit Rating Table Correction Factor Data in Miscellaneous Engineering Data section.

Entering Wet Bulb Temperature	Total Air Volume		Outdoor Air Temperature Entering Outdoor Coil																							
			85°F (29°C)						95°F (35°C)						105°F (41°C)						115°F (46°C)					
			Total Cooling Capacity		Comp Motor kW Input	Sensible To Total Ratio (S/T) Dry Bulb			Total Cooling Capacity		Comp Motor kW Input	Sensible To Total Ratio (S/T) Dry Bulb			Total Cooling Capacity		Comp Motor kW Input	Sensible To Total Ratio (S/T) Dry Bulb			Total Cooling Capacity		Comp Motor kW Input	Sensible To Total Ratio (S/T) Dry Bulb		
	cfm	L/s	kBtuh	kW		75°F 24°C	80°F 27°C	85°F 29°C	kBtuh	kW		75°F 24°C	80°F 27°C	85°F 29°C	kBtuh	kW		75°F 24°C	80°F 27°C	85°F 29°C	kBtuh	kW		75°F 24°C	80°F 27°C	85°F 29°C
13ACC-030 — CH33-24/30A-2F TXV and RFC COOLING CAPACITY																										
63°F (17°C)	850	400	30.2	8.9	1.90	.71	.86	.98	29.2	8.6	2.14	.72	.87	.99	28.2	8.3	2.41	.73	.89	1.00	27.1	7.9	2.72	.75	.91	1.00
	1000	470	31.0	9.1	1.91	.75	.91	1.00	30.0	8.8	2.15	.76	.93	1.00	28.9	8.5	2.42	.78	.95	1.00	27.8	8.1	2.73	.79	.97	1.00
	1150	545	31.7	9.3	1.91	.78	.96	1.00	30.6	9.0	2.15	.80	.97	1.00	29.6	8.7	2.42	.82	.98	1.00	28.5	8.4	2.73	.84	1.00	1.00
67°F (19°C)	850	400	32.0	9.4	1.91	.55	.69	.82	30.9	9.1	2.15	.56	.70	.84	29.9	8.8	2.42	.57	.71	.86	28.7	8.4	2.73	.57	.72	.88
	1000	470	32.7	9.6	1.91	.57	.72	.88	31.6	9.3	2.16	.58	.74	.89	30.4	8.9	2.42	.59	.75	.91	29.2	8.6	2.73	.60	.77	.93
	1150	545	33.3	9.8	1.91	.60	.76	.92	32.1	9.4	2.16	.60	.78	.95	30.9	9.1	2.43	.61	.80	.96	29.7	8.7	2.74	.62	.82	.98
71°F (22°C)	850	400	34.2	10.0	1.92	.41	.54	.66	33.0	9.7	2.17	.41	.54	.67	31.8	9.3	2.43	.42	.55	.69	30.6	9.0	2.74	.42	.56	.70
	1000	470	34.9	10.2	1.92	.42	.56	.70	33.6	9.8	2.17	.42	.57	.71	32.4	9.5	2.44	.42	.57	.73	31.1	9.1	2.74	.43	.59	.75
	1150	545	35.4	10.4	1.92	.43	.58	.74	34.1	10.0	2.17	.43	.59	.75	32.8	9.6	2.44	.44	.60	.77	31.5	9.2	2.74	.44	.61	.79
13ACC-030 — CH33-36A/B/C-2F TXV COOLING CAPACITY																										
63°F (17°C)	850	400	30.8	9.0	1.90	.69	.84	.97	29.7	8.7	2.14	.71	.86	.98	28.6	8.4	2.41	.72	.88	1.00	27.5	8.1	2.71	.73	.90	1.00
	1000	470	31.6	9.3	1.90	.73	.90	1.00	30.5	8.9	2.15	.74	.91	1.00	29.4	8.6	2.41	.76	.93	1.00	28.3	8.3	2.72	.77	.95	1.00
	1150	545	32.4	9.5	1.91	.77	.94	1.00	31.2	9.1	2.15	.78	.96	1.00	30.1	8.8	2.42	.80	.98	1.00	29.0	8.5	2.72	.82	.99	1.00
67°F (19°C)	850	400	32.9	9.6	1.90	.54	.67	.80	31.7	9.3	2.15	.55	.68	.82	30.5	8.9	2.42	.56	.69	.84	29.3	8.6	2.72	.56	.70	.86
	1000	470	33.6	9.8	1.91	.57	.71	.86	32.4	9.5	2.16	.57	.72	.88	31.1	9.1	2.43	.58	.73	.89	29.9	8.8	2.73	.59	.75	.92
	1150	545	34.2	10.0	1.91	.58	.74	.91	32.9	9.6	2.16	.59	.76	.93	31.7	9.3	2.43	.60	.78	.95	30.4	8.9	2.73	.61	.80	.97
71°F (22°C)	850	400	35.1	10.3	1.92	.41	.53	.65	33.8	9.9	2.16	.41	.53	.66	32.6	9.6	2.43	.41	.54	.67	31.3	9.2	2.74	.41	.55	.68
	1000	470	35.9	10.5	1.92	.41	.55	.68	34.6	10.1	2.17	.42	.55	.69	33.2	9.7	2.44	.42	.57	.71	31.9	9.3	2.74	.42	.57	.72
	1150	545	36.5	10.7	1.92	.42	.57	.72	35.1	10.3	2.18	.43	.58	.73	33.7	9.9	2.44	.43	.59	.75	32.4	9.5	2.74	.43	.60	.77
13ACC-030 — CH33-36A/B/C-2F RFC COOLING CAPACITY																										
63°F (17°C)	850	400	30.6	9.0	1.90	.70	.84	.97	29.5	8.6	2.14	.71	.86	.98	28.4	8.3	2.41	.72	.88	1.00	27.3	8.0	2.71	.73	.90	1.00
	1000	470	31.4	9.2	1.90	.73	.89	1.00	30.3	8.9	2.15	.74	.91	1.00	29.2	8.6	2.41	.76	.93	1.00	28.1	8.2	2.72	.78	.95	1.00
	1150	545	32.1	9.4	1.91	.77	.94	1.00	31.0	9.1	2.15	.79	.96	1.00	29.9	8.8	2.42	.80	.98	1.00	28.8	8.4	2.72	.82	.99	1.00
67°F (19°C)	850	400	32.6	9.6	1.90	.54	.67	.80	31.5	9.2	2.15	.55	.68	.82	30.3	8.9	2.42	.56	.69	.84	29.1	8.5	2.72	.56	.71	.86
	1000	470	33.4	9.8	1.91	.56	.70	.86	32.2	9.4	2.16	.57	.72	.88	30.9	9.1	2.43	.58	.74	.89	29.7	8.7	2.73	.59	.75	.92
	1150	545	34.0	10.0	1.91	.58	.74	.91	32.7	9.6	2.16	.59	.76	.93	31.5	9.2	2.43	.60	.77	.95	30.2	8.9	2.73	.61	.79	.97
71°F (22°C)	850	400	34.9	10.2	1.92	.41	.53	.64	33.6	9.8	2.16	.41	.53	.66	32.4	9.5	2.43	.41	.54	.67	31.1	9.1	2.74	.41	.55	.68
	1000	470	35.7	10.5	1.92	.41	.55	.68	34.3	10.1	2.17	.42	.56	.69	33.0	9.7	2.44	.42	.56	.71	31.7	9.3	2.74	.42	.58	.72
	1150	545	36.3	10.6	1.92	.42	.57	.72	34.9	10.2	2.18	.43	.58	.73	33.5	9.8	2.44	.43	.59	.75	32.1	9.4	2.74	.43	.60	.77
13ACC-030 — CH23-41 TXV and RFC COOLING CAPACITY																										
63°F (17°C)	850	400	31.2	9.1	1.91	.70	.85	.99	30.1	8.8	2.15	.72	.87	1.00	29.0	8.5	2.41	.73	.89	1.00	27.8	8.1	2.72	.74	.91	1.00
	1000	470	32.2	9.4	1.91	.74	.91	1.00	31.0	9.1	2.15	.76	.93	1.00	29.8	8.7	2.42	.77	.95	1.00	28.6	8.4	2.73	.79	.97	1.00
	1150	545	33.0	9.7	1.91	.78	.96	1.00	31.8	9.3	2.16	.80	.97	1.00	30.6	9.0	2.43	.82	.99	1.00	29.5	8.6	2.73	.84	1.00	1.00
67°F (19°C)	850	400	33.3	9.8	1.91	.55	.68	.82	32.0	9.4	2.16	.56	.69	.83	30.8	9.0	2.43	.56	.70	.85	29.5	8.6	2.73	.57	.72	.87
	1000	470	34.1	10.0	1.92	.57	.72	.87	32.8	9.6	2.17	.58	.73	.89	31.5	9.2	2.44	.59	.75	.91	30.2	8.9	2.73	.59	.76	.94
	1150	545	34.8	10.2	1.92	.59	.76	.92	33.4	9.8	2.17	.60	.78	.95	32.1	9.4	2.44	.61	.79	.96	30.7	9.0	2.74	.62	.81	.99
71°F (22°C)	850	400	35.6	10.4	1.92	.41	.53	.65	34.3	10.1	2.18	.41	.54	.66	32.9	9.6	2.45	.41	.55	.68	31.6	9.3	2.74	.42	.55	.69
	1000	470	36.5	10.7	1.92	.42	.55	.69	35.0	10.3	2.18	.42	.57	.71	33.6	9.8	2.45	.42	.57	.72	32.2	9.4	2.75	.43	.58	.74
	1150	545	37.1	10.9	1.92	.43	.58	.73	35.6	10.4	2.18	.43	.59	.75	34.1	10.0	2.46	.43	.60	.77	32.6	9.6	2.76	.44	.62	.79
13ACC-030 — CH33-42B-2F TXV and RFC COOLING CAPACITY																										
63°F (17°C)	850	400	31.6	9.3	1.91	.69	.84	.97	30.5	8.9	2.15	.70	.86	.99	29.4	8.6	2.41	.71	.88	1.00	28.2	8.3	2.72	.73	.89	1.00
	1000	470	32.6	9.6	1.91	.73	.89	1.00	31.4	9.2	2.15	.74	.91	1.00	30.2	8.9	2.42	.76	.93	1.00	29.0	8.5	2.72	.78	.95	1.00
	1150	545	33.4	9.8	1.91	.77	.94	1.00	32.1	9.4	2.16	.78	.96	1.00	31.0	9.1	2.43	.80	.98	1.00	29.8	8.7	2.73	.82	.99	1.00
67°F (19°C)	850	400	33.9	9.9	1.91	.54	.67	.80	32.6	9.6	2.16	.55	.68	.82	31.3	9.2	2.43	.56	.69	.84	30.1	8.8	2.73	.56	.70	.86
	1000	470	34.7	10.2	1.92	.56	.71	.86	33.4	9.8	2.17	.57	.72	.88	32.1	9.4	2.43	.58	.73	.90	30.7	9.0	2.73	.59	.75	.92
	1150	545	35.4	10.4	1.92	.58	.74	.91	34.0	10.0	2.17	.59	.76	.93	32.6	9.6	2.44	.60	.78	.95	31.2	9.1	2.74	.61	.80	.97
71°F (22°C)	850	400	36.3	10.6	1.92	.41	.53	.64	34.9	10.2	2.18	.41	.53	.65	33.5	9.8	2.45	.41	.54	.67	32.2	9.4	2.74	.41	.55	.68
	1000	470	37.2	10.9	1.92	.42	.55	.68	35.7	10.5	2.18	.42	.55	.69	34.3	10.1	2.45	.42	.56	.71	32.8	9.6	2.75	.42	.57	.72
	1150	545	37.9	11.1	1.92	.42	.57	.71	36.3	10.6	2.18	.43	.58	.73	34.8	10.2	2.46	.43	.59	.75	33.3	9.8	2.76	.44	.60	.77
13ACC-030 — CH33-24/30A-2F TXV with G60UHV-36A-070 COOLING CAPACITY																										
63°F (17°C)	805	380	29.8	8.7	1.90	.70	.85	.97	28.9	8.5	2.14	.71	.86	.98	27.9	8.2	2.41	.72	.88	1.00	26.8	7.9	2.72	.73	.89	1.00
	955	450	30.7	9.0	1.91	.74	.90	1.00	29.7	8.7	2.15	.75	.91	1.00	28.7	8.4	2.42	.76	.93	1.00	27.6	8.1	2.73	.78	.95	1.00
	1105	520	31.4	9.2	1.91	.77	.94	1.00	30.4	8.9	2.15	.79	.96	1.00	29.3	8.6	2.42	.81	.98	1.00	28.2	8.3	2.73	.82	.99	1.00
67°F (19°C)	805	380	31.7	9.3	1.91	.55	.68	.81	30.7	9.0	2.15	.55	.68	.82	29.6	8.7	2.42	.56	.69	.84	28.4	8.3	2.73	.56	.71	.86
	955	450	32.5	9.5	1.91	.57	.71	.86	31.3	9.2	2.16	.57	.72	.88	30.2	8.9	2.43	.58	.74	.90	29.0	8.5	2.73	.59	.76	.92
	1105	520	33.0	9.7	1.91	.59	.75	.91	31.9	9.3	2.16	.60	.77	.93	30.7	9.0	2.43	.60	.78	.95	29.5	8.6	2.74	.62	.80	.97
71°F (22°C)	805	380	33.9	9.9	1.92	.41	.53	.65	32.7	9.6	2.17	.41	.54	.66	31.5	9.2	2.43	.41	.54	.67	30.3	8.9	2.74	.42	.55	.68
	955	450	34.6	10.1	1.92	.42	.55	.69	33.4	9.8	2.17	.42	.56	.70	32.2	9.4	2.44	.42	.57	.71	30.9	9.1	2.74	.43	.58	.73
	1105	520	35.2	10.3	1.92	.43	.58	.73	33.9	9.9	2.17	.43	.58	.74	32.6	9.6	2.44	.43	.59	.76	31.3	9.2	2.75	.44	.61	.78
13ACC-030 — CH33-36A/B-2F TXV with G60UHV-36A/B COOLING CAPACITY																										
63°F (17°C)	805	380	30.2	8.9	1.90	.69	.83	.96	29.2	8.6	2.14	.70	.84	.97	28.2	8.3	2.41	.70	.86	.99	27.0	7.9	2.72	.72	.88	1.00
	955	450	31.1	9.1	1.90	.72	.88	1.00	30.1	8.8	2.15	.73	.90	1.00	29.0	8.5	2.41	.75	.91	1.00	27.8	8.1	2.72	.76	.94	1.00
	1105	520	31.9	9.3	1.91	.76	.93	1.00	30.8	9.0	2.15	.77	.94	1.00	29.7	8.7	2.42	.79	.96	1.00	28.6	8.4	2.72	.81	.98	1.00
67°F (19°C)	805	380	32.3	9.5	1.91	.54	.66	.79	31.2	9.1	2.15	.54	.67	.81	30.0	8.8	2.42	.55	.68	.82	28.8	8.4	2.73	.56	.69	.84
	955	450	33.2	9.7	1.91	.56	.69	.84	31.9	9.3	2.16	.56	.71	.86	30.7	9.0	2.43	.57	.72	.88	29.5	8.6	2.73	.58	.74	.90
	1105	520	33.8	9.9	1.91	.58	.73	.90	32.5	9.5	2.17	.58	.75	.91	31.3	9.2	2.43	.60	.76	.93	30.0	8.8	2.73	.60	.78	.95
71°F (22°C)	805	380	34.6	10.1	1.92	.41	.52	.64	33.3	9.8	2.17	.41	.53	.65	32.1	9.4	2.44	.41	.53	.65	30.8	9.0	2.74	.41	.54	.67
	955	450	35.4	10.4	1.92	.41	.54	.67	34.1	10.0	2.17	.42	.55	.68	32.8	9.6	2.44	.42	.56	.70	31.5	9.2	2.74	.42	.57	.71
	1105	520	36.1	10.6	1.92	.42	.56	.71	34.7	10.2	2.18	.42	.57	.72	33.4	9.8	2.45	.43	.58	.74	32.0	9.4	2.75	.43	.59	.76

RATINGS — 2.5 TON

NOTE - For Temperatures and Capacities not shown in tables, see bulletin - Cooling Unit Rating Table Correction Factor Data in Miscellaneous Engineering Data section.

Entering Wet Bulb Temperature	Total Air Volume		Outdoor Air Temperature Entering Outdoor Coil																							
			85°F (29°C)						95°F (35°C)						105°F (41°C)						115°F (46°C)					
			Total Cooling Capacity		Comp Motor kW Input	Sensible To Total Ratio (S/T) Dry Bulb			Total Cooling Capacity		Comp Motor kW Input	Sensible To Total Ratio (S/T) Dry Bulb			Total Cooling Capacity		Comp Motor kW Input	Sensible To Total Ratio (S/T) Dry Bulb			Total Cooling Capacity		Comp Motor kW Input	Sensible To Total Ratio (S/T) Dry Bulb		
	cfm	L/s	kBtuh	kW		75°F 24°C	80°F 27°C	85°F 29°C	kBtuh	kW		75°F 24°C	80°F 27°C	85°F 29°C	kBtuh	kW		75°F 24°C	80°F 27°C	85°F 29°C	kBtuh	kW		75°F 24°C	80°F 27°C	85°F 29°C
13ACC-030 — CH33-42B-2F TXV with G60UHV-36B-090 COOLING CAPACITY																										
63°F (17°C)	805	380	31.1	9.1	1.90	.68	.83	.96	30.0	8.8	2.15	.69	.84	.97	28.9	8.5	2.41	.70	.86	.99	27.7	8.1	2.72	.72	.88	1.00
	955	450	32.0	9.4	1.91	.72	.88	1.00	30.9	9.1	2.15	.73	.90	1.00	29.7	8.7	2.42	.75	.92	1.00	28.5	8.4	2.72	.76	.94	1.00
	1105	520	32.9	9.6	1.91	.76	.93	1.00	31.7	9.3	2.15	.77	.95	1.00	30.5	8.9	2.42	.79	.97	1.00	29.3	8.6	2.73	.81	.98	1.00
67°F (19°C)	805	380	33.3	9.8	1.91	.54	.66	.79	32.0	9.4	2.16	.54	.67	.80	30.8	9.0	2.43	.55	.68	.82	29.6	8.7	2.73	.55	.69	.84
	955	450	34.2	10.0	1.92	.56	.69	.84	32.9	9.6	2.17	.56	.71	.86	31.6	9.3	2.43	.57	.72	.88	30.3	8.9	2.73	.58	.74	.90
	1105	520	34.9	10.2	1.92	.58	.73	.89	33.5	9.8	2.17	.58	.75	.91	32.2	9.4	2.44	.59	.76	.93	30.8	9.0	2.74	.60	.79	.96
71°F (22°C)	805	380	35.7	10.5	1.92	.41	.52	.63	34.3	10.1	2.18	.41	.53	.64	33.0	9.7	2.44	.41	.53	.65	31.6	9.3	2.74	.41	.54	.67
	955	450	36.6	10.7	1.92	.41	.54	.67	35.2	10.3	2.18	.41	.55	.68	33.8	9.9	2.45	.42	.56	.69	32.4	9.5	2.75	.42	.57	.71
	1105	520	37.3	10.9	1.92	.42	.56	.71	35.8	10.5	2.18	.42	.57	.72	34.4	10.1	2.45	.43	.58	.74	32.9	9.6	2.75	.43	.59	.76
13ACC-030 — CB30M-21/26 - CB30U-21/26 COOLING CAPACITY																										
63°F (17°C)	800	380	29.5	8.6	2.04	.71	.84	.96	28.5	8.4	2.30	.72	.86	.97	27.5	8.1	2.59	.73	.87	.98	26.4	7.7	2.93	.74	.89	1.00
	1000	470	30.7	9.0	2.04	.76	.91	1.00	29.7	8.7	2.29	.77	.92	1.00	28.6	8.4	2.58	.78	.94	1.00	27.5	8.1	2.91	.80	.95	1.00
	1200	565	31.7	9.3	2.04	.81	.96	1.00	30.6	9.0	2.29	.82	.97	1.00	29.6	8.7	2.58	.84	.99	1.00	28.4	8.3	2.91	.85	1.00	1.00
67°F (19°C)	800	380	31.6	9.3	2.03	.56	.69	.81	30.5	8.9	2.29	.56	.70	.82	29.4	8.6	2.58	.57	.70	.83	28.2	8.3	2.91	.58	.72	.85
	1000	470	32.7	9.6	2.04	.59	.73	.88	31.5	9.2	2.30	.59	.75	.89	30.3	8.9	2.59	.60	.76	.91	29.1	8.5	2.91	.61	.78	.92
	1200	565	33.4	9.8	2.05	.61	.78	.93	32.2	9.4	2.31	.63	.80	.95	31.0	9.1	2.59	.63	.81	.96	29.7	8.7	2.92	.65	.83	.98
71°F (22°C)	800	380	33.8	9.9	2.05	.42	.54	.66	32.6	9.6	2.31	.42	.55	.67	31.4	9.2	2.60	.43	.55	.68	30.1	8.8	2.92	.43	.56	.69
	1000	470	34.9	10.2	2.06	.43	.57	.71	33.6	9.8	2.32	.43	.58	.72	32.3	9.5	2.61	.44	.59	.74	31.0	9.1	2.92	.44	.60	.75
	1200	565	35.6	10.4	2.06	.44	.60	.76	34.3	10.1	2.33	.45	.61	.78	32.9	9.6	2.61	.45	.62	.79	31.6	9.3	2.93	.46	.63	.81
13ACC-030 — CB30M-31 - CB30U-31 COOLING CAPACITY																										
63°F (17°C)	800	380	30.0	8.8	2.03	.71	.84	.96	28.9	8.5	2.28	.72	.85	.97	27.9	8.2	2.57	.73	.87	.99	26.7	7.8	2.90	.74	.89	1.00
	1000	470	31.2	9.1	2.03	.76	.91	1.00	30.1	8.8	2.28	.77	.92	1.00	29.0	8.5	2.57	.78	.94	1.00	27.8	8.1	2.89	.80	.96	1.00
	1200	565	32.2	9.4	2.04	.80	.96	1.00	31.1	9.1	2.29	.82	.97	1.00	30.0	8.8	2.57	.83	.99	1.00	28.9	8.5	2.90	.85	1.00	1.00
67°F (19°C)	800	380	32.1	9.4	2.03	.56	.68	.81	30.9	9.1	2.29	.56	.69	.82	29.8	8.7	2.57	.57	.70	.83	28.6	8.4	2.89	.58	.71	.85
	1000	470	33.2	9.7	2.04	.59	.73	.87	32.0	9.4	2.30	.59	.74	.89	30.8	9.0	2.59	.60	.76	.91	29.5	8.6	2.91	.61	.77	.93
	1200	565	34.0	10.0	2.05	.61	.78	.93	32.7	9.6	2.31	.62	.80	.95	31.5	9.2	2.59	.63	.81	.97	30.1	8.8	2.91	.64	.83	.98
71°F (22°C)	800	380	34.4	10.1	2.05	.42	.54	.65	33.1	9.7	2.31	.42	.54	.66	31.9	9.3	2.60	.43	.55	.67	30.6	9.0	2.91	.43	.56	.69
	1000	470	35.5	10.4	2.06	.43	.57	.71	34.2	10.0	2.32	.44	.58	.72	32.8	9.6	2.60	.44	.59	.73	31.5	9.2	2.92	.44	.60	.75
	1200	565	36.3	10.6	2.06	.44	.60	.76	34.9	10.2	2.33	.45	.61	.77	33.5	9.8	2.61	.45	.62	.79	32.1	9.4	2.93	.45	.63	.81
13ACC-030 — CB30M-41 - CB30U-41/46 COOLING CAPACITY																										
63°F (17°C)	800	380	30.0	8.8	2.02	.71	.84	.96	28.9	8.5	2.27	.72	.85	.97	27.9	8.2	2.56	.73	.86	.99	26.7	7.8	2.89	.74	.88	1.00
	1000	470	31.3	9.2	2.02	.76	.90	1.00	30.1	8.8	2.28	.77	.92	1.00	29.0	8.5	2.56	.78	.94	1.00	27.8	8.1	2.88	.80	.96	1.00
	1200	565	32.3	9.5	2.03	.81	.96	1.00	31.1	9.1	2.29	.82	.98	1.00	30.0	8.8	2.57	.83	.99	1.00	28.8	8.4	2.89	.85	1.00	1.00
67°F (19°C)	800	380	32.1	9.4	2.03	.56	.68	.80	30.9	9.1	2.29	.56	.69	.82	29.8	8.7	2.57	.57	.70	.83	28.6	8.4	2.88	.58	.71	.85
	1000	470	33.3	9.8	2.03	.59	.73	.87	32.0	9.4	2.30	.59	.74	.89	30.8	9.0	2.58	.60	.76	.91	29.5	8.6	2.90	.61	.77	.93
	1200	565	34.1	10.0	2.04	.61	.78	.93	32.8	9.6	2.30	.62	.80	.95	31.5	9.2	2.58	.63	.81	.97	30.2	8.9	2.90	.64	.83	.98
71°F (22°C)	800	380	34.4	10.1	2.04	.42	.54	.65	33.1	9.7	2.31	.42	.54	.66	31.9	9.3	2.59	.43	.55	.67	30.6	9.0	2.90	.43	.56	.69
	1000	470	35.6	10.4	2.05	.43	.57	.71	34.2	10.0	2.32	.44	.58	.72	32.8	9.6	2.60	.44	.59	.73	31.5	9.2	2.91	.44	.60	.75
	1200	565	36.4	10.7	2.05	.44	.60	.76	34.9	10.2	2.32	.45	.61	.77	33.5	9.8	2.61	.45	.62	.79	32.1	9.4	2.92	.45	.64	.81
13ACC-030 — CB31MV-41 COOLING CAPACITY																										
63°F (17°C)	800	380	30.1	8.8	2.02	.71	.84	.96	29.0	8.5	2.27	.72	.85	.97	27.9	8.2	2.56	.73	.87	.99	26.8	7.9	2.89	.74	.88	1.00
	1000	470	31.4	9.2	2.02	.76	.90	1.00	30.2	8.9	2.28	.77	.92	1.00	29.1	8.5	2.56	.78	.94	1.00	27.9	8.2	2.88	.80	.96	1.00
	1200	565	32.4	9.5	2.03	.80	.96	1.00	31.2	9.1	2.29	.82	.98	1.00	30.1	8.8	2.57	.83	.99	1.00	28.9	8.5	2.89	.86	1.00	1.00
67°F (19°C)	800	380	32.2	9.4	2.03	.56	.68	.80	31.0	9.1	2.29	.56	.69	.82	29.9	8.8	2.57	.57	.70	.83	28.7	8.4	2.88	.57	.71	.85
	1000	470	33.4	9.8	2.03	.58	.73	.87	32.1	9.4	2.30	.59	.74	.89	30.9	9.1	2.58	.60	.76	.90	29.6	8.7	2.90	.61	.77	.93
	1200	565	34.2	10.0	2.04	.61	.78	.93	32.9	9.6	2.30	.63	.80	.95	31.6	9.3	2.58	.63	.81	.97	30.2	8.9	2.90	.65	.83	.99
71°F (22°C)	800	380	34.5	10.1	2.04	.42	.54	.66	33.2	9.7	2.31	.42	.55	.66	32.0	9.4	2.59	.43	.55	.68	30.7	9.0	2.90	.43	.56	.69
	1000	470	35.7	10.5	2.05	.43	.57	.71	34.3	10.1	2.32	.43	.58	.72	32.9	9.6	2.60	.44	.59	.73	31.6	9.3	2.91	.44	.59	.75
	1200	565	36.6	10.7	2.05	.44	.60	.76	35.1	10.3	2.32	.45	.61	.77	33.6	9.8	2.61	.45	.62	.79	32.2	9.4	2.92	.46	.63	.81
13ACC-030 — CVP10-41/EC10Q2 COOLING CAPACITY																										
63°F (17°C)	800	380	29.4	8.6	2.03	.71	.84	.95	28.4	8.3	2.28	.71	.85	.97	27.4	8.0	2.57	.73	.86	.98	26.2	7.7	2.90	.74	.88	1.00
	1000	470	30.7	9.0	2.03	.75	.90	1.00	29.6	8.7	2.28	.77	.92	1.00	28.5	8.4	2.57	.78	.93	1.00	27.4	8.0	2.89	.80	.95	1.00
	1200	565	31.7	9.3	2.04	.80	.96	1.00	30.6	9.0	2.29	.82	.97	1.00	29.5	8.6	2.57	.83	.99	1.00	28.4	8.3	2.90	.85	1.00	1.00
67°F (19°C)	800	380	31.5	9.2	2.03	.56	.68	.80	30.4	8.9	2.29	.56	.69	.82	29.3	8.6	2.57	.57	.70	.83	28.1	8.2	2.89	.57	.71	.84
	1000	470	32.7	9.6	2.04	.58	.73	.87	31.5	9.2	2.30	.59	.74	.88	30.3	8.9	2.59	.60	.76	.90	29.0	8.5	2.91	.61	.77	.92
	1200	565	33.6	9.8	2.05	.61	.78	.93	32.3	9.5	2.31	.62	.79	.94	31.0	9.1	2.60	.63	.81	.96	29.7	8.7	2.91	.65	.83	.98
71°F (22°C)	800	380	33.8	9.9	2.05	.42	.54	.65	32.5	9.5	2.31	.42	.54	.66	31.3	9.2	2.60	.42	.55	.67	30.1	8.8	2.91	.43	.56	.68
	1000	470	35.0	10.3	2.06	.43	.57	.70	33.6	9.8	2.32	.43	.58	.72	32.3	9.5	2.61	.44	.59	.73	31.0	9.1	2.92	.44	.59	.75
	1200	565	35.8	10.5	2.06	.44	.60	.75	34.4	10.1	2.33	.44	.61	.77	33.0	9.7	2.61	.45	.62	.79	31.6	9.3	2.93	.46	.63	.80

RATINGS — 3 TON (-036)

13ACC-036 — C23-41 TXV and RFC COOLING CAPACITY																										
63°F (17°C)	1050	495	33.7	9.9	2.34	.71	.86	.98	32.6	9.6	2.64	.72	.88	.99	31.4	9.2	2.98	.73	.89	1.00	30.1	8.8	3.37	.75	.92	1.00
	1200	565	34.4	10.1	2.35	.74	.90	1.00	33.3	9.8	2.64	.75	.92	1.00	32.1	9.4	2.99	.77	.94	1.00	30.8	9.0	3.38	.78	.95	1.00
	1350	635	35.1	10.3	2.35	.77	.94	1.00	33.9	9.9	2.65	.79	.96	1.00	32.7	9.6	2.99	.80	.97	1.00	31.4	9.2	3.39	.82	.99	1.00
67°F (19°C)	1050	495	35.8	10.5	2.35	.55	.68	.83	34.6	10.1	2.65	.56	.69	.84	33.3	9.8	2.99	.57	.71	.86	31.9	9.3	3.39	.57	.72	.88
	1200	565	36.4	10.7	2.36	.57	.71	.87	35.1	10.3	2.65	.58	.73	.89	33.8	9.9	3.00	.59	.74	.91	32.4	9.5	3.39	.59	.76	.93
	1350	635	36.9	10.8	2.36	.59	.75	.91	35.6	10.4	2.66	.59	.76	.93	34.2	10.0	3.00	.60	.78	.95	32.8	9.6	3.40	.61	.80	.96
71°F (22°C)	1050	495	38.1	11.2	2.37	.41	.54	.66	36.8	10.8	2.67	.41	.54	.67	35.5	10.4	3.02	.41	.55	.68	34.0	10.0	3.41	.42	.56	.70
	1200	565	38.7	11.3	2.38	.42	.56	.69	37.4	11.0	2.68	.42	.56	.70	36.0	10.6	3.02	.42	.57	.72	34.5	10.1	3.42	.43	.58	.74
	1350	635	39.2	11.5	2.38	.42	.57	.72	37.9	11.1	2.68	.43	.58	.74	36.4	10.7	3.03	.43	.59	.75	34.9	10.2	3.42	.43	.60	.78

NOTE - For Temperatures and Capacities not shown in tables, see bulletin - Cooling Unit Rating Table Correction Factor Data in Miscellaneous Engineering Data section.

Entering Wet Bulb Temperature	Total Air Volume		Outdoor Air Temperature Entering Outdoor Coil																							
			85°F (29°C)						95°F (35°C)						105°F (41°C)						115°F (46°C)					
			Total Cooling Capacity		Comp Motor kW Input	Sensible To Total Ratio (S/T) Dry Bulb			Total Cooling Capacity		Comp Motor kW Input	Sensible To Total Ratio (S/T) Dry Bulb			Total Cooling Capacity		Comp Motor kW Input	Sensible To Total Ratio (S/T) Dry Bulb			Total Cooling Capacity		Comp Motor kW Input	Sensible To Total Ratio (S/T) Dry Bulb		
	cfm	L/s	kBtuh	kW		75°F 24°C	80°F 27°C	85°F 29°C	kBtuh	kW		75°F 24°C	80°F 27°C	85°F 29°C	kBtuh	kW		75°F 24°C	80°F 27°C	85°F 29°C	kBtuh	kW		75°F 24°C	80°F 27°C	85°F 29°C
13ACC-036 — C23-46 TXV and RFC COOLING CAPACITY																										
63°F (17°C)	1050	495	34.0	10.0	2.34	.71	.86	.98	32.8	9.6	2.63	.72	.87	.99	31.6	9.3	2.98	.73	.89	1.00	30.3	8.9	3.37	.74	.91	1.00
	1200	565	34.7	10.2	2.35	.74	.90	1.00	33.6	9.8	2.64	.75	.91	1.00	32.3	9.5	2.98	.76	.94	1.00	31.0	9.1	3.38	.78	.96	1.00
	1350	635	35.4	10.4	2.35	.77	.94	1.00	34.2	10.0	2.65	.78	.95	1.00	33.0	9.7	2.99	.80	.97	1.00	31.7	9.3	3.38	.82	.99	1.00
67°F (19°C)	1050	495	36.2	10.6	2.36	.55	.68	.82	34.9	10.2	2.65	.56	.69	.84	33.6	9.8	2.99	.56	.70	.85	32.2	9.4	3.39	.57	.72	.87
	1200	565	36.8	10.8	2.36	.57	.71	.86	35.5	10.4	2.66	.57	.72	.88	34.1	10.0	3.00	.58	.74	.90	32.7	9.6	3.40	.59	.76	.92
	1350	635	37.3	10.9	2.36	.58	.74	.91	36.0	10.6	2.66	.59	.76	.92	34.6	10.1	3.01	.60	.77	.94	33.1	9.7	3.41	.61	.79	.96
71°F (22°C)	1050	495	38.6	11.3	2.37	.41	.53	.66	37.2	10.9	2.67	.41	.54	.67	35.8	10.5	3.02	.42	.55	.68	34.4	10.1	3.41	.42	.56	.69
	1200	565	39.2	11.5	2.38	.42	.55	.69	37.8	11.1	2.68	.42	.56	.70	36.4	10.7	3.02	.42	.57	.71	34.9	10.2	3.42	.43	.58	.73
	1350	635	39.7	11.6	2.38	.42	.57	.72	38.3	11.2	2.68	.43	.58	.73	36.8	10.8	3.03	.43	.59	.75	35.3	10.3	3.43	.43	.60	.77
13ACC-036 — C33-36A/B/C TXV and RFC COOLING CAPACITY																										
63°F (17°C)	1050	495	34.7	10.2	2.29	.71	.87	.99	33.5	9.8	2.57	.72	.88	1.00	32.2	9.4	2.91	.74	.90	1.00	30.9	9.1	3.29	.76	.92	1.00
	1200	565	35.4	10.4	2.29	.75	.91	1.00	34.2	10.0	2.58	.76	.93	1.00	32.9	9.6	2.92	.78	.95	1.00	31.6	9.3	3.30	.79	.97	1.00
	1350	635	36.1	10.6	2.30	.78	.95	1.00	34.9	10.2	2.59	.79	.96	1.00	33.6	9.8	2.92	.81	.98	1.00	32.3	9.5	3.30	.83	1.00	1.00
67°F (19°C)	1050	495	36.8	10.8	2.30	.56	.69	.83	35.5	10.4	2.59	.56	.70	.85	34.1	10.0	2.92	.57	.72	.87	32.7	9.6	3.31	.58	.73	.89
	1200	565	37.4	11.0	2.30	.57	.72	.88	36.1	10.6	2.59	.58	.73	.90	34.7	10.2	2.93	.59	.75	.92	33.2	9.7	3.32	.60	.77	.93
	1350	635	37.9	11.1	2.31	.59	.75	.92	36.6	10.7	2.60	.60	.77	.94	35.1	10.3	2.94	.61	.79	.95	33.7	9.9	3.32	.62	.81	.98
71°F (22°C)	1050	495	39.2	11.5	2.32	.41	.54	.67	37.8	11.1	2.61	.41	.55	.68	36.4	10.7	2.95	.42	.55	.69	34.9	10.2	3.33	.42	.56	.70
	1200	565	39.8	11.7	2.32	.42	.56	.70	38.4	11.3	2.61	.42	.57	.71	36.9	10.8	2.95	.42	.58	.73	35.4	10.4	3.34	.43	.59	.74
	1350	635	40.3	11.8	2.33	.43	.58	.73	38.9	11.4	2.62	.43	.59	.75	37.3	10.9	2.96	.43	.60	.77	35.8	10.5	3.35	.44	.61	.78
13ACC-036 — C33-42B TXV and RFC COOLING CAPACITY																										
63°F (17°C)	1050	495	34.7	10.2	2.34	.71	.87	.99	33.5	9.8	2.64	.72	.88	1.00	32.2	9.4	2.98	.74	.90	1.00	30.9	9.1	3.38	.76	.92	1.00
	1200	565	35.4	10.4	2.35	.75	.91	1.00	34.2	10.0	2.65	.76	.93	1.00	32.9	9.6	2.99	.78	.95	1.00	31.6	9.3	3.38	.79	.97	1.00
	1350	635	36.1	10.6	2.36	.78	.95	1.00	34.9	10.2	2.65	.79	.96	1.00	33.6	9.8	2.99	.81	.98	1.00	32.3	9.5	3.39	.83	1.00	1.00
67°F (19°C)	1050	495	36.8	10.8	2.36	.56	.69	.83	35.5	10.4	2.65	.56	.70	.85	34.1	10.0	3.00	.57	.72	.87	32.7	9.6	3.40	.58	.73	.89
	1200	565	37.4	11.0	2.36	.57	.72	.88	36.1	10.6	2.66	.58	.73	.90	34.7	10.2	3.01	.59	.75	.92	33.2	9.7	3.40	.60	.77	.93
	1350	635	37.9	11.1	2.37	.59	.75	.92	36.6	10.7	2.66	.60	.77	.94	35.1	10.3	3.01	.61	.79	.95	33.7	9.9	3.41	.62	.81	.98
71°F (22°C)	1050	495	39.2	11.5	2.38	.41	.54	.67	37.8	11.1	2.68	.41	.55	.68	36.4	10.7	3.02	.42	.55	.69	34.9	10.2	3.42	.42	.56	.70
	1200	565	39.8	11.7	2.38	.42	.56	.70	38.4	11.3	2.68	.42	.57	.71	36.9	10.8	3.02	.42	.58	.73	35.4	10.4	3.43	.43	.59	.74
	1350	635	40.3	11.8	2.39	.43	.58	.73	38.9	11.4	2.68	.43	.59	.75	37.3	10.9	3.03	.43	.60	.77	35.8	10.5	3.43	.44	.61	.78
13ACC-036 — C26-31 TXV and RFC COOLING CAPACITY																										
63°F (17°C)	1050	495	34.9	10.2	2.35	.71	.86	.99	33.7	9.9	2.65	.72	.88	1.00	32.4	9.5	2.99	.73	.90	1.00	31.1	9.1	3.38	.75	.92	1.00
	1200	565	35.7	10.5	2.35	.74	.91	1.00	34.5	10.1	2.65	.75	.92	1.00	33.2	9.7	2.99	.77	.94	1.00	31.8	9.3	3.38	.79	.96	1.00
	1350	635	36.4	10.7	2.36	.77	.95	1.00	35.2	10.3	2.65	.79	.96	1.00	33.9	9.9	3.00	.81	.98	1.00	32.5	9.5	3.39	.82	1.00	1.00
67°F (19°C)	1050	495	37.2	10.9	2.36	.55	.68	.82	35.8	10.5	2.66	.56	.69	.84	34.4	10.1	3.01	.57	.71	.86	33.0	9.7	3.40	.57	.72	.88
	1200	565	37.8	11.1	2.37	.57	.72	.87	36.5	10.7	2.67	.58	.73	.89	35.0	10.3	3.01	.58	.75	.91	33.5	9.8	3.41	.60	.76	.93
	1350	635	38.4	11.3	2.38	.59	.75	.92	37.0	10.8	2.67	.60	.76	.93	35.5	10.4	3.02	.61	.78	.95	34.0	10.0	3.41	.62	.80	.97
71°F (22°C)	1050	495	39.6	11.6	2.38	.41	.54	.66	38.2	11.2	2.68	.41	.54	.67	36.7	10.8	3.03	.42	.55	.69	35.2	10.3	3.43	.42	.56	.70
	1200	565	40.3	11.8	2.39	.42	.56	.69	38.8	11.4	2.69	.42	.56	.70	37.3	10.9	3.04	.42	.57	.72	35.7	10.5	3.44	.43	.58	.74
	1350	635	40.8	12.0	2.39	.43	.58	.72	39.4	11.5	2.70	.43	.58	.74	37.8	11.1	3.04	.43	.59	.76	36.2	10.6	3.44	.43	.60	.78
13ACC-036 — C26-46 TXV and RFC COOLING CAPACITY																										
63°F (17°C)	1050	495	35.1	10.3	2.34	.71	.86	.99	33.9	9.9	2.63	.72	.88	1.00	32.6	9.6	2.98	.73	.90	1.00	31.2	9.1	3.37	.75	.92	1.00
	1200	565	36.0	10.6	2.35	.74	.91	1.00	34.7	10.2	2.64	.76	.93	1.00	33.3	9.8	2.99	.77	.95	1.00	31.9	9.3	3.38	.79	.97	1.00
	1350	635	36.7	10.8	2.35	.78	.95	1.00	35.4	10.4	2.65	.79	.97	1.00	34.1	10.0	2.99	.81	.99	1.00	32.7	9.6	3.39	.83	1.00	1.00
67°F (19°C)	1050	495	37.4	11.0	2.36	.55	.69	.83	36.0	10.6	2.66	.56	.70	.84	34.6	10.1	3.00	.57	.71	.86	33.1	9.7	3.40	.57	.73	.89
	1200	565	38.1	11.2	2.37	.57	.72	.87	36.7	10.8	2.67	.58	.73	.89	35.2	10.3	3.01	.59	.75	.92	33.7	9.9	3.41	.60	.76	.94
	1350	635	38.7	11.3	2.37	.59	.75	.92	37.3	10.9	2.67	.60	.77	.94	35.8	10.5	3.01	.61	.79	.96	34.2	10.0	3.41	.62	.81	.98
71°F (22°C)	1050	495	39.9	11.7	2.38	.41	.54	.66	38.5	11.3	2.68	.41	.54	.67	37.0	10.8	3.02	.42	.55	.68	35.4	10.4	3.43	.42	.56	.70
	1200	565	40.7	11.9	2.39	.42	.56	.69	39.2	11.5	2.69	.42	.56	.71	37.6	11.0	3.04	.42	.57	.72	35.9	10.5	3.43	.43	.59	.74
	1350	635	41.2	12.1	2.40	.43	.58	.73	39.7	11.6	2.70	.43	.59	.74	38.1	11.2	3.04	.43	.60	.76	36.4	10.7	3.44	.44	.61	.79
13ACC-036 — C26-41 TXV and RFC COOLING CAPACITY																										
63°F (17°C)	1050	495	35.3	10.3	2.35	.71	.87	.99	34.1	10.0	2.64	.72	.88	1.00	32.8	9.6	2.98	.74	.90	1.00	31.4	9.2	3.37	.75	.92	1.00
	1200	565	36.2	10.6	2.35	.74	.91	1.00	34.9	10.2	2.65	.76	.93	1.00	33.6	9.8	2.99	.77	.95	1.00	32.2	9.4	3.39	.80	.97	1.00
	1350	635	36.9	10.8	2.36	.78	.95	1.00	35.6	10.4	2.66	.80	.97	1.00	34.3	10.1	3.00	.81	.99	1.00	33.0	9.7	3.39	.83	1.00	1.00
67°F (19°C)	1050	495	37.5	11.0	2.36	.56	.69	.83	36.2	10.6	2.66	.56	.70	.85	34.8	10.2	3.00	.57	.71	.87	33.3	9.8	3.40	.58	.73	.89
	1200	565	38.3	11.2	2.37	.57	.72	.88	36.9	10.8	2.67	.58	.73	.89	35.4	10.4	3.01	.59	.75	.92	33.9	9.9	3.41	.60	.77	.94
	1350	635	38.8	11.4	2.37	.59	.76	.92	37.4	11.0	2.67	.60	.77	.94	35.9	10.5	3.02	.61	.79	.96	34.4	10.1	3.42	.62	.81	.98
71°F (22°C)	1050	495	40.1	11.8	2.38	.41	.54	.66	38.6	11.3	2.69	.42	.54	.67	37.1	10.9	3.03	.42	.55	.69	35.5	10.4	3.43	.42	.56	.70
	1200	565	40.8	12.0	2.39	.42	.56	.70	39.3	11.5	2.69	.42	.57	.71	37.7	11.0	3.04	.43	.58	.72	36.1	10.6	3.43	.43	.59	.74
	1350	635	41.3	12.1	2.40	.43	.58	.73	39.8	11.7	2.70	.43	.59	.75	38.2	11.2	3.05	.43	.60	.77	36.5	10.7	3.45	.44	.61	.79
13ACC-036 — C23-51 TXV and RFC COOLING CAPACITY																										
63°F (17°C)	1050	495	35.8	10.5	2.36	.70	.86	.98	34.6	10.1	2.65	.71	.87	1.00	33.3	9.8	2.99	.73	.89	1.00	31.9	9.3	3.39	.74	.91	1.00
	1200	565	36.7	10.8	2.36	.73	.90	1.00	35.4	10.4	2.66	.75	.92	1.00	34.0	10.0	3.00	.77	.94	1.00	32.6	9.6	3.40	.78	.96	1.00
	1350	635	37.4	11.0	2.37	.77	.94	1.00	36.1	10.6	2.67	.78	.96	1.00	34.7	10.2	3.01	.80	.98	1.00	33.3	9.8	3.40	.82	.99	1.00
67°F (19°C)	1050	495	38.2	11.2	2.37	.55	.68	.82	36.8	10.8	2.67	.56	.69	.84	35.4	10.4	3.02	.56	.70	.86	33.9	9.9	3.41	.57	.72	.88
	1200	565	38.9	11.4	2.38	.57	.71	.87	37.5	11.0	2.68	.57	.72	.88	36.0	10.6	3.02	.58	.74	.91	34.5	10.1	3.42	.59	.76	.93
	1350	635	39.5	11.6	2.38	.58	.74	.91	38.1	11.2	2.68	.59	.76	.93	36.5	10.7	3.03	.60	.78	.95	35.0	10.3	3.43	.61	.80	.97
71°F (22°C)	1050	495	40.8	12.0	2.39	.41	.53	.65	39.3	11.5	2.70	.41	.54	.67	37.8	11.1	3.04	.41	.55	.68	36.2	10.6	3.44	.42	.55	.69
	1200	565	41.5	12.2	2.40	.42	.55	.69	40.0	11.7	2.70	.42	.56	.70	38.4	11.3	3.05	.42	.57	.71	36.8	10.8	3.45	.43	.58	.73
	1350	635	42.1	12.3	2.41	.42	.57	.72	40.6	11.9	2.71	.43	.58	.73	39.0	11.4	3.06	.43	.59	.75	37.2	10.9	3.46	.43	.60	.77

NOTE - For Temperatures and Capacities not shown in tables, see bulletin - Cooling Unit Rating Table Correction Factor Data in Miscellaneous Engineering Data section.

Entering Wet Bulb Temperature	Total Air Volume		Outdoor Air Temperature Entering Outdoor Coil																							
			85°F (29°C)						95°F (35°C)						105°F (41°C)						115°F (46°C)					
			Total Cooling Capacity		Comp Motor kW Input	Sensible To Total Ratio (S/T) Dry Bulb			Total Cooling Capacity		Comp Motor kW Input	Sensible To Total Ratio (S/T) Dry Bulb			Total Cooling Capacity		Comp Motor kW Input	Sensible To Total Ratio (S/T) Dry Bulb			Total Cooling Capacity		Comp Motor kW Input	Sensible To Total Ratio (S/T) Dry Bulb		
	cfm	L/s	kBtuh	kW		75°F 24°C	80°F 27°C	85°F 29°C	kBtuh	kW		75°F 24°C	80°F 27°C	85°F 29°C	kBtuh	kW		75°F 24°C	80°F 27°C	85°F 29°C	kBtuh	kW		75°F 24°C	80°F 27°C	85°F 29°C
13ACC-036 — C33-48B TXV COOLING CAPACITY																										
63°F (17°C)	1050	495	36.2	10.6	2.37	.70	.85	.98	34.9	10.2	2.67	.71	.87	.99	33.6	9.8	3.01	.72	.89	1.00	32.2	9.4	3.41	.74	.91	1.00
	1200	565	37.0	10.8	2.37	.73	.90	1.00	35.7	10.5	2.67	.74	.91	1.00	34.4	10.1	3.02	.76	.93	1.00	32.9	9.6	3.41	.78	.95	1.00
	1350	635	37.7	11.0	2.38	.77	.94	1.00	36.4	10.7	2.68	.78	.96	1.00	35.0	10.3	3.02	.80	.97	1.00	33.6	9.8	3.42	.82	.99	1.00
67°F (19°C)	1050	495	38.6	11.3	2.38	.55	.68	.81	37.2	10.9	2.69	.55	.69	.83	35.7	10.5	3.03	.56	.70	.85	34.2	10.0	3.43	.57	.71	.87
	1200	565	39.3	11.5	2.39	.56	.71	.86	37.9	11.1	2.69	.57	.72	.88	36.4	10.7	3.04	.58	.73	.90	34.8	10.2	3.44	.59	.75	.92
	1350	635	39.9	11.7	2.40	.58	.74	.90	38.5	11.3	2.70	.59	.75	.92	36.9	10.8	3.04	.60	.77	.94	35.3	10.3	3.45	.61	.79	.96
71°F (22°C)	1050	495	41.2	12.1	2.41	.41	.53	.65	39.7	11.6	2.71	.41	.54	.66	38.2	11.2	3.06	.41	.55	.68	36.6	10.7	3.46	.42	.55	.69
	1200	565	42.0	12.3	2.41	.42	.55	.68	40.4	11.8	2.72	.42	.56	.70	38.9	11.4	3.06	.42	.57	.71	37.2	10.9	3.47	.42	.58	.73
	1350	635	42.5	12.5	2.42	.42	.57	.71	41.0	12.0	2.72	.43	.58	.73	39.4	11.5	3.07	.43	.58	.75	37.7	11.0	3.48	.43	.60	.77
13ACC-036 — C33-48B RFC COOLING CAPACITY																										
63°F (17°C)	1050	495	36.1	10.6	2.36	.70	.85	.98	34.8	10.2	2.66	.71	.87	.99	33.5	9.8	3.00	.72	.88	1.00	32.1	9.4	3.39	.74	.91	1.00
	1200	565	36.9	10.8	2.36	.73	.89	1.00	35.6	10.4	2.66	.75	.91	1.00	34.2	10.0	3.00	.76	.93	1.00	32.8	9.6	3.40	.78	.95	1.00
	1350	635	37.6	11.0	2.37	.76	.94	1.00	36.3	10.6	2.67	.78	.95	1.00	34.9	10.2	3.01	.80	.97	1.00	33.5	9.8	3.41	.82	.99	1.00
67°F (19°C)	1050	495	38.4	11.3	2.37	.55	.68	.81	37.1	10.9	2.68	.55	.69	.83	35.6	10.4	3.02	.56	.70	.85	34.1	10.0	3.41	.57	.71	.87
	1200	565	39.2	11.5	2.38	.56	.71	.86	37.7	11.0	2.68	.57	.72	.88	36.3	10.6	3.03	.58	.73	.90	34.7	10.2	3.42	.59	.75	.92
	1350	635	39.7	11.6	2.39	.58	.74	.90	38.3	11.2	2.69	.59	.75	.92	36.8	10.8	3.03	.60	.77	.94	35.2	10.3	3.43	.61	.79	.96
71°F (22°C)	1050	495	41.0	12.0	2.40	.41	.53	.65	39.6	11.6	2.70	.41	.54	.66	38.0	11.1	3.05	.41	.55	.67	36.5	10.7	3.44	.42	.55	.69
	1200	565	41.8	12.3	2.40	.42	.55	.68	40.3	11.8	2.71	.42	.56	.70	38.7	11.3	3.05	.42	.57	.71	37.0	10.8	3.45	.43	.58	.73
	1350	635	42.4	12.4	2.41	.42	.57	.71	40.8	12.0	2.71	.43	.58	.73	39.2	11.5	3.06	.43	.59	.75	37.5	11.0	3.46	.43	.60	.77
13ACC-036 — C33-38A/B TXV COOLING CAPACITY																										
63°F (17°C)	1050	495	36.4	10.7	2.36	.71	.86	.99	35.1	10.3	2.66	.72	.88	1.00	33.7	9.9	3.00	.73	.90	1.00	32.3	9.5	3.40	.75	.92	1.00
	1200	565	37.2	10.9	2.37	.74	.91	1.00	35.9	10.5	2.67	.75	.92	1.00	34.5	10.1	3.01	.77	.94	1.00	33.1	9.7	3.41	.79	.96	1.00
	1350	635	38.0	11.1	2.37	.77	.95	1.00	36.6	10.7	2.67	.79	.97	1.00	35.3	10.3	3.02	.81	.98	1.00	33.8	9.9	3.42	.83	1.00	1.00
67°F (19°C)	1050	495	38.7	11.3	2.38	.55	.68	.82	37.3	10.9	2.68	.56	.69	.84	35.8	10.5	3.02	.57	.71	.86	34.3	10.1	3.42	.57	.72	.88
	1200	565	39.4	11.5	2.39	.57	.72	.87	38.0	11.1	2.69	.58	.73	.89	36.5	10.7	3.03	.58	.74	.91	34.9	10.2	3.43	.60	.76	.93
	1350	635	40.0	11.7	2.39	.59	.75	.91	38.6	11.3	2.69	.60	.76	.93	37.0	10.8	3.04	.60	.78	.95	35.4	10.4	3.44	.62	.80	.97
71°F (22°C)	1050	495	41.3	12.1	2.40	.41	.53	.66	39.8	11.7	2.71	.41	.54	.67	38.3	11.2	3.05	.42	.55	.68	36.6	10.7	3.45	.42	.56	.70
	1200	565	42.0	12.3	2.41	.42	.56	.69	40.5	11.9	2.71	.42	.56	.70	38.9	11.4	3.06	.42	.57	.72	37.2	10.9	3.46	.43	.58	.74
	1350	635	42.7	12.5	2.41	.42	.57	.72	41.1	12.0	2.72	.43	.58	.74	39.4	11.5	3.07	.43	.59	.76	37.7	11.0	3.47	.44	.61	.78
13ACC-036 — C33-38A/B RFC COOLING CAPACITY																										
63°F (17°C)	1050	495	36.3	10.6	2.36	.71	.86	.99	35.0	10.3	2.66	.72	.88	1.00	33.7	9.9	3.00	.73	.89	1.00	32.3	9.5	3.40	.75	.91	1.00
	1200	565	37.1	10.9	2.37	.74	.91	1.00	35.8	10.5	2.67	.76	.93	1.00	34.4	10.1	3.01	.77	.95	1.00	33.0	9.7	3.41	.79	.96	1.00
	1350	635	37.9	11.1	2.37	.77	.95	1.00	36.6	10.7	2.67	.79	.96	1.00	35.2	10.3	3.02	.81	.98	1.00	33.8	9.9	3.42	.83	1.00	1.00
67°F (19°C)	1050	495	38.6	11.3	2.38	.55	.68	.82	37.2	10.9	2.68	.56	.69	.84	35.8	10.5	3.02	.56	.71	.86	34.2	10.0	3.42	.57	.72	.88
	1200	565	39.4	11.5	2.39	.57	.71	.87	37.9	11.1	2.69	.58	.73	.89	36.4	10.7	3.03	.59	.74	.91	34.8	10.2	3.43	.60	.76	.93
	1350	635	40.0	11.7	2.39	.59	.75	.92	38.5	11.3	2.69	.60	.77	.93	36.9	10.8	3.04	.61	.78	.96	35.3	10.3	3.44	.62	.80	.97
71°F (22°C)	1050	495	41.2	12.1	2.40	.41	.54	.66	39.7	11.6	2.71	.41	.54	.67	38.2	11.2	3.05	.41	.55	.68	36.6	10.7	3.45	.42	.56	.70
	1200	565	42.0	12.3	2.41	.42	.55	.69	40.4	11.8	2.71	.42	.56	.70	38.8	11.4	3.06	.42	.57	.72	37.2	10.9	3.46	.43	.58	.74
	1350	635	42.6	12.5	2.41	.42	.57	.72	41.0	12.0	2.72	.43	.58	.74	39.3	11.5	3.07	.43	.59	.76	37.6	11.0	3.47	.44	.61	.78
13ACC-036 — CR26-30N-F TXV and RFC COOLING CAPACITY																										
63°F (17°C)	1050	495	34.2	10.0	2.35	.71	.86	.99	33.1	9.7	2.64	.72	.88	1.00	31.8	9.3	2.99	.73	.90	1.00	30.6	9.0	3.38	.75	.92	1.00
	1200	565	35.0	10.3	2.35	.74	.90	1.00	33.8	9.9	2.65	.75	.92	1.00	32.5	9.5	3.00	.77	.94	1.00	31.2	9.1	3.39	.79	.96	1.00
	1350	635	35.6	10.4	2.36	.77	.94	1.00	34.4	10.1	2.66	.79	.96	1.00	33.2	9.7	3.00	.81	.98	1.00	31.9	9.3	3.39	.83	.99	1.00
67°F (19°C)	1050	495	36.3	10.6	2.36	.55	.69	.83	35.1	10.3	2.66	.56	.70	.84	33.7	9.9	3.00	.57	.71	.86	32.4	9.5	3.40	.57	.72	.88
	1200	565	37.0	10.8	2.37	.57	.72	.87	35.7	10.5	2.66	.58	.73	.89	34.3	10.1	3.01	.58	.75	.91	32.9	9.6	3.41	.60	.76	.93
	1350	635	37.5	11.0	2.37	.59	.75	.91	36.1	10.6	2.67	.60	.76	.93	34.7	10.2	3.02	.61	.78	.95	33.3	9.8	3.41	.62	.80	.97
71°F (22°C)	1050	495	38.7	11.3	2.38	.41	.54	.66	37.4	11.0	2.68	.41	.54	.67	36.0	10.6	3.02	.42	.55	.69	34.5	10.1	3.42	.42	.56	.70
	1200	565	39.3	11.5	2.39	.42	.56	.69	38.0	11.1	2.69	.42	.56	.70	36.5	10.7	3.03	.42	.57	.72	35.0	10.3	3.44	.43	.58	.74
	1350	635	39.8	11.7	2.39	.42	.58	.73	38.4	11.3	2.69	.43	.59	.74	37.0	10.8	3.04	.43	.59	.76	35.4	10.4	3.44	.44	.60	.78
13ACC-036 — CR26-36N/W-F TXV and RFC COOLING CAPACITY																										
63°F (17°C)	1050	495	34.9	10.2	2.35	.71	.86	.99	33.7	9.9	2.65	.72	.88	1.00	32.4	9.5	2.99	.73	.90	1.00	31.1	9.1	3.38	.75	.92	1.00
	1200	565	35.7	10.5	2.36	.74	.91	1.00	34.5	10.1	2.65	.75	.92	1.00	33.2	9.7	2.99	.77	.94	1.00	31.8	9.3	3.39	.79	.96	1.00
	1350	635	36.4	10.7	2.36	.77	.95	1.00	35.2	10.3	2.66	.79	.96	1.00	33.9	9.9	3.00	.81	.98	1.00	32.5	9.5	3.40	.82	1.00	1.00
67°F (19°C)	1050	495	37.2	10.9	2.36	.55	.68	.82	35.8	10.5	2.66	.56	.69	.84	34.4	10.1	3.01	.57	.71	.86	33.0	9.7	3.40	.57	.72	.88
	1200	565	37.8	11.1	2.37	.57	.72	.87	36.5	10.7	2.67	.58	.73	.89	35.1	10.3	3.01	.58	.74	.91	33.5	9.8	3.41	.60	.76	.93
	1350	635	38.4	11.3	2.38	.59	.75	.91	37.0	10.8	2.67	.59	.76	.93	35.5	10.4	3.02	.61	.78	.95	34.0	10.0	3.41	.62	.80	.97
71°F (22°C)	1050	495	39.6	11.6	2.38	.41	.54	.66	38.2	11.2	2.69	.41	.54	.67	36.7	10.8	3.03	.41	.55	.69	35.2	10.3	3.43	.42	.56	.70
	1200	565	40.3	11.8	2.39	.42	.56	.69	38.9	11.4	2.69	.42	.56	.71	37.3	10.9	3.04	.42	.57	.72	35.8	10.5	3.44	.43	.58	.74
	1350	635	40.9	12.0	2.40	.42	.58	.72	39.4	11.5	2.70	.43	.58	.74	37.8	11.1	3.04	.43	.59	.76	36.2	10.6	3.44	.43	.60	.78
13ACC-036 — CR26-48N/W-F TXV and RFC COOLING CAPACITY																										
63°F (17°C)	1050	495	35.0	10.3	2.34	.70	.85	.98	33.7	9.9	2.64	.71	.87	.99	32.4	9.5	2.98	.72	.89	1.00	31.1	9.1	3.37	.74	.90	1.00
	1200	565	35.8	10.5	2.35	.73	.89	1.00	34.5	10.1	2.64	.74	.91	1.00	33.2	9.7	2.99	.76	.93	1.00	31.8	9.3	3.38	.78	.95	1.00
	1350	635	36.5	10.7	2.35	.76	.93	1.00	35.2	10.3	2.65	.78	.95	1.00	33.8	9.9	2.99	.79	.97	1.00	32.4	9.5	3.39	.82	.99	1.00
67°F (19°C)	1050	495	37.3	10.9	2.36	.55	.67	.81	36.0	10.6	2.66	.55	.69	.83	34.6	10.1	3.00	.56	.70	.85	33.1	9.7	3.40	.57	.71	.87
	1200	565	38.1	11.2	2.37	.56	.70	.86	36.7	10.8	2.67	.57	.71	.88	35.2	10.3	3.01	.58	.73	.90	33.7	9.9	3.41	.59	.75	.92
	1350	635	38.6	11.3	2.37	.58	.74	.90	37.2	10.9	2.67	.59	.75	.92	35.7	10.5	3.02	.60	.77	.94	34.1	10.0	3.42	.61	.79	.96
71°F (22°C)	1050	495	39.9	11.7	2.38	.41	.53	.65	38.4	11.3	2.69	.41	.54	.66	37.0	10.8	3.03	.41	.54	.67	35.4	10.4	3.43	.42	.55	.69
	1200	565	40.6	11.9	2.39	.42	.55	.68	39.2	11.5	2.69	.42	.55	.69	37.6	11.0	3.04	.42	.56	.71	36.0	10.6	3.44	.42	.57	.72
	1350	635	41.2	12.1	2.39	.42	.57	.71	39.7	11.6	2.70	.42	.57	.72	38.1	11.2	3.05	.43	.58	.74	36.4	10.7	3.45	.43	.60	.77

NOTE - For Temperatures and Capacities not shown in tables, see bulletin - Cooling Unit Rating Table Correction Factor Data in Miscellaneous Engineering Data section.

Entering Wet Bulb Temperature	Total Air Volume		Outdoor Air Temperature Entering Outdoor Coil																							
			85°F (29°C)						95°F (35°C)						105°F (41°C)						115°F (46°C)					
			Total Cooling Capacity		Comp Motor kW Input	Sensible To Total Ratio (S/T) Dry Bulb			Total Cooling Capacity		Comp Motor kW Input	Sensible To Total Ratio (S/T) Dry Bulb			Total Cooling Capacity		Comp Motor kW Input	Sensible To Total Ratio (S/T) Dry Bulb			Total Cooling Capacity		Comp Motor kW Input	Sensible To Total Ratio (S/T) Dry Bulb		
	cfm	L/s	kBtuh	kW		75°F 24°C	80°F 27°C	85°F 29°C	kBtuh	kW		75°F 24°C	80°F 27°C	85°F 29°C	kBtuh	kW		75°F 24°C	80°F 27°C	85°F 29°C	kBtuh	kW		75°F 24°C	80°F 27°C	85°F 29°C
13ACC-036 — CH33-36A/B/C-2F TXV and RFC COOLING CAPACITY																										
63°F (17°C)	1050	495	34.5	10.1	2.35	.70	.85	.98	33.4	9.8	2.64	.71	.87	.99	32.1	9.4	2.98	.72	.89	1.00	30.8	9.0	3.38	.74	.91	1.00
	1200	565	35.3	10.3	2.35	.73	.90	1.00	34.1	10.0	2.65	.75	.91	1.00	32.8	9.6	2.99	.76	.93	1.00	31.5	9.2	3.39	.78	.95	1.00
	1350	635	36.0	10.6	2.36	.77	.93	1.00	34.7	10.2	2.66	.78	.95	1.00	33.5	9.8	3.00	.80	.97	1.00	32.2	9.4	3.39	.82	.98	1.00
67°F (19°C)	1050	495	36.7	10.8	2.36	.55	.68	.82	35.5	10.4	2.66	.55	.69	.83	34.1	10.0	3.00	.56	.70	.85	32.7	9.6	3.40	.57	.72	.87
	1200	565	37.4	11.0	2.37	.56	.71	.86	36.1	10.6	2.66	.57	.72	.88	34.7	10.2	3.01	.58	.73	.90	33.2	9.7	3.41	.59	.76	.92
	1350	635	37.9	11.1	2.37	.58	.74	.90	36.6	10.7	2.67	.59	.75	.92	35.2	10.3	3.01	.60	.77	.94	33.7	9.9	3.41	.61	.79	.96
71°F (22°C)	1050	495	39.2	11.5	2.38	.41	.53	.65	37.8	11.1	2.68	.41	.54	.67	36.4	10.7	3.02	.41	.55	.68	34.9	10.2	3.42	.42	.56	.69
	1200	565	39.8	11.7	2.39	.42	.55	.69	38.5	11.3	2.69	.42	.56	.70	37.0	10.8	3.03	.42	.57	.71	35.4	10.4	3.43	.43	.58	.73
	1350	635	40.4	11.8	2.39	.42	.57	.72	38.9	11.4	2.69	.43	.58	.73	37.4	11.0	3.04	.43	.59	.75	35.9	10.5	3.44	.43	.60	.77
13ACC-036 — CH23-41 TXV and RFC COOLING CAPACITY																										
63°F (17°C)	1050	495	35.4	10.4	2.35	.71	.87	.99	34.1	10.0	2.65	.72	.89	1.00	32.9	9.6	2.99	.74	.90	1.00	31.5	9.2	3.38	.75	.92	1.00
	1200	565	36.2	10.6	2.36	.75	.91	1.00	34.9	10.2	2.65	.76	.93	1.00	33.6	9.8	2.99	.77	.95	1.00	32.3	9.5	3.39	.80	.97	1.00
	1350	635	36.9	10.8	2.36	.78	.95	1.00	35.7	10.5	2.66	.80	.97	1.00	34.3	10.1	3.00	.81	.99	1.00	33.0	9.7	3.40	.84	1.00	1.00
67°F (19°C)	1050	495	37.5	11.0	2.36	.56	.69	.83	36.2	10.6	2.66	.56	.70	.85	34.8	10.2	3.01	.57	.71	.87	33.3	9.8	3.40	.58	.73	.89
	1200	565	38.2	11.2	2.37	.57	.72	.88	36.9	10.8	2.67	.58	.73	.90	35.4	10.4	3.01	.59	.75	.92	33.9	9.9	3.41	.60	.77	.94
	1350	635	38.8	11.4	2.38	.59	.76	.92	37.4	11.0	2.67	.60	.77	.94	35.9	10.5	3.02	.61	.79	.96	34.4	10.1	3.42	.62	.81	.98
71°F (22°C)	1050	495	40.0	11.7	2.38	.41	.54	.66	38.6	11.3	2.69	.42	.54	.68	37.1	10.9	3.03	.42	.55	.69	35.5	10.4	3.43	.42	.56	.70
	1200	565	40.7	11.9	2.39	.42	.56	.70	39.2	11.5	2.69	.42	.57	.71	37.7	11.0	3.04	.43	.58	.73	36.1	10.6	3.44	.43	.59	.74
	1350	635	41.3	12.1	2.40	.43	.58	.73	39.8	11.7	2.70	.43	.59	.75	38.2	11.2	3.04	.43	.60	.77	36.5	10.7	3.44	.44	.61	.79
13ACC-036 — CH23-51 TXV and RFC COOLING CAPACITY																										
63°F (17°C)	1050	495	35.5	10.4	2.35	.71	.86	.99	34.3	10.1	2.64	.72	.88	1.00	33.0	9.7	2.98	.73	.90	1.00	31.6	9.3	3.37	.75	.92	1.00
	1200	565	36.4	10.7	2.35	.74	.91	1.00	35.1	10.3	2.65	.76	.93	1.00	33.8	9.9	2.99	.77	.95	1.00	32.4	9.5	3.38	.79	.97	1.00
	1350	635	37.1	10.9	2.36	.78	.95	1.00	35.8	10.5	2.66	.79	.97	1.00	34.5	10.1	3.00	.81	.99	1.00	33.1	9.7	3.39	.83	1.00	1.00
67°F (19°C)	1050	495	37.8	11.1	2.36	.55	.69	.83	36.4	10.7	2.66	.56	.70	.84	35.0	10.3	3.00	.57	.71	.87	33.5	9.8	3.40	.58	.73	.88
	1200	565	38.5	11.3	2.37	.57	.72	.88	37.1	10.9	2.67	.58	.73	.90	35.6	10.4	3.01	.59	.75	.92	34.1	10.0	3.41	.60	.77	.94
	1350	635	39.1	11.5	2.37	.59	.75	.92	37.7	11.0	2.67	.60	.77	.94	36.1	10.6	3.02	.61	.79	.96	34.6	10.1	3.42	.62	.81	.98
71°F (22°C)	1050	495	40.3	11.8	2.38	.41	.54	.66	38.9	11.4	2.69	.41	.54	.67	37.4	11.0	3.03	.42	.55	.69	35.8	10.5	3.43	.42	.56	.70
	1200	565	41.0	12.0	2.39	.42	.56	.70	39.5	11.6	2.69	.42	.57	.71	38.0	11.1	3.04	.42	.57	.73	36.3	10.6	3.44	.43	.59	.74
	1350	635	41.6	12.2	2.40	.43	.58	.73	40.1	11.8	2.70	.43	.59	.75	38.5	11.3	3.05	.43	.60	.76	36.7	10.8	3.45	.44	.61	.78
13ACC-036 — CH33-42B-2F TXV and RFC COOLING CAPACITY																										
63°F (17°C)	1050	495	35.8	10.5	2.36	.70	.85	.98	34.6	10.1	2.65	.71	.87	.99	33.3	9.8	3.00	.73	.89	1.00	31.9	9.3	3.39	.74	.91	1.00
	1200	565	36.7	10.8	2.36	.73	.89	1.00	35.4	10.4	2.66	.74	.91	1.00	34.0	10.0	3.00	.76	.93	1.00	32.6	9.6	3.40	.78	.95	1.00
	1350	635	37.4	11.0	2.37	.77	.94	1.00	36.1	10.6	2.66	.78	.95	1.00	34.7	10.2	3.01	.80	.97	1.00	33.3	9.8	3.41	.82	.99	1.00
67°F (19°C)	1050	495	38.2	11.2	2.37	.55	.68	.81	36.8	10.8	2.67	.55	.69	.83	35.4	10.4	3.02	.56	.70	.85	33.9	9.9	3.42	.57	.71	.87
	1200	565	38.9	11.4	2.38	.57	.71	.86	37.5	11.0	2.68	.57	.72	.88	36.0	10.6	3.02	.58	.74	.90	34.5	10.1	3.42	.59	.75	.92
	1350	635	39.5	11.6	2.39	.58	.74	.90	38.1	11.2	2.68	.59	.75	.92	36.6	10.7	3.03	.60	.77	.94	35.0	10.3	3.43	.61	.79	.96
71°F (22°C)	1050	495	40.8	12.0	2.39	.41	.53	.65	39.3	11.5	2.69	.41	.54	.66	37.8	11.1	3.04	.41	.55	.68	36.2	10.6	3.45	.42	.55	.69
	1200	565	41.5	12.2	2.40	.42	.55	.68	40.0	11.7	2.70	.42	.56	.70	38.5	11.3	3.05	.42	.57	.71	36.8	10.8	3.45	.43	.58	.73
	1350	635	42.1	12.3	2.41	.42	.57	.71	40.6	11.9	2.71	.43	.58	.73	39.0	11.4	3.06	.43	.59	.75	37.3	10.9	3.46	.43	.60	.77
13ACC-036 — CH33-44/48B-2F TXV and RFC COOLING CAPACITY																										
63°F (17°C)	1050	495	36.1	10.6	2.36	.70	.85	.98	34.8	10.2	2.66	.71	.87	1.00	33.5	9.8	3.00	.72	.89	1.00	32.0	9.4	3.40	.74	.91	1.00
	1200	565	37.0	10.8	2.37	.73	.89	1.00	35.6	10.4	2.67	.75	.92	1.00	34.2	10.0	3.01	.76	.94	1.00	32.8	9.6	3.41	.78	.95	1.00
	1350	635	37.7	11.0	2.38	.76	.94	1.00	36.3	10.6	2.68	.78	.96	1.00	34.9	10.2	3.02	.80	.98	1.00	33.5	9.8	3.42	.82	.99	1.00
67°F (19°C)	1050	495	38.5	11.3	2.38	.55	.68	.81	37.1	10.9	2.68	.55	.69	.83	35.7	10.5	3.03	.56	.70	.85	34.1	10.0	3.43	.57	.72	.87
	1200	565	39.3	11.5	2.39	.56	.71	.86	37.9	11.1	2.69	.57	.72	.88	36.3	10.6	3.04	.58	.73	.90	34.7	10.2	3.44	.59	.75	.92
	1350	635	39.9	11.7	2.39	.58	.74	.90	38.4	11.3	2.70	.59	.75	.92	36.9	10.8	3.05	.60	.77	.94	35.2	10.3	3.44	.61	.79	.96
71°F (22°C)	1050	495	41.2	12.1	2.41	.41	.53	.65	39.7	11.6	2.71	.41	.54	.66	38.1	11.2	3.06	.41	.54	.68	36.5	10.7	3.46	.42	.55	.69
	1200	565	41.9	12.3	2.41	.41	.55	.68	40.4	11.8	2.72	.42	.56	.69	38.8	11.4	3.06	.42	.56	.71	37.1	10.9	3.47	.42	.57	.73
	1350	635	42.6	12.5	2.42	.42	.57	.71	41.0	12.0	2.72	.42	.58	.73	39.3	11.5	3.07	.43	.59	.75	37.6	11.0	3.47	.43	.60	.77
13ACC-036 — C33-36A/B TXV with G60UHV-36A/B COOLING CAPACITY																										
63°F (17°C)	1070	505	34.7	10.2	2.34	.72	.87	.99	33.5	9.8	2.64	.73	.89	1.00	32.3	9.5	2.98	.74	.91	1.00	31.0	9.1	3.38	.76	.93	1.00
	1220	575	35.5	10.4	2.35	.75	.91	1.00	34.3	10.1	2.65	.76	.93	1.00	33.0	9.7	2.99	.78	.95	1.00	31.7	9.3	3.38	.80	.97	1.00
	1370	645	36.1	10.6	2.36	.78	.95	1.00	34.9	10.2	2.65	.80	.97	1.00	33.7	9.9	2.99	.82	.98	1.00	32.4	9.5	3.39	.84	1.00	1.00
67°F (19°C)	1070	505	36.8	10.8	2.36	.56	.69	.84	35.5	10.4	2.65	.57	.71	.85	34.2	10.0	3.00	.57	.72	.88	32.7	9.6	3.40	.58	.73	.89
	1220	575	37.4	11.0	2.36	.57	.73	.88	36.1	10.6	2.66	.58	.74	.90	34.7	10.2	3.01	.59	.75	.92	33.3	9.8	3.40	.60	.77	.94
	1370	645	37.9	11.1	2.37	.59	.76	.92	36.6	10.7	2.66	.60	.78	.94	35.2	10.3	3.01	.61	.79	.96	33.7	9.9	3.41	.62	.81	.98
71°F (22°C)	1070	505	39.2	11.5	2.38	.41	.54	.67	37.9	11.1	2.68	.42	.55	.68	36.4	10.7	3.02	.42	.56	.70	34.9	10.2	3.42	.42	.57	.71
	1220	575	39.8	11.7	2.38	.42	.56	.70	38.4	11.3	2.68	.42	.57	.72	36.9	10.8	3.03	.43	.58	.73	35.4	10.4	3.43	.43	.59	.75
	1370	645	40.3	11.8	2.39	.43	.58	.74	38.9	11.4	2.68	.43	.59	.75	37.4	11.0	3.03	.43	.60	.77	35.8	10.5	3.43	.44	.61	.79
13ACC-036 — C33-42B TXV with G60UHV-36B-090 COOLING CAPACITY																										
63°F (17°C)	1070	505	34.7	10.2	2.34	.72	.87	.99	33.5	9.8	2.64	.73	.89	1.00	32.3	9.5	2.98	.74	.91	1.00	31.0	9.1	3.38	.76	.93	1.00
	1220	575	35.5	10.4	2.35	.75	.91	1.00	34.3	10.1	2.65	.76	.93	1.00	33.0	9.7	2.99	.78	.95	1.00	31.7	9.3	3.38	.80	.97	1.00
	1370	645	36.1	10.6	2.36	.78	.95	1.00	34.9	10.2	2.65	.80	.97	1.00	33.7	9.9	2.99	.82	.98	1.00	32.4	9.5	3.39	.84	1.00	1.00
67°F (19°C)	1070	505	36.8	10.8	2.36	.56	.69	.84	35.5	10.4	2.65	.57	.71	.85	34.2	10.0	3.00	.57	.72	.88	32.7	9.6	3.40	.58	.73	.89
	1220	575	37.4	11.0	2.36	.57	.73	.88	36.1	10.6	2.66	.58	.74	.90	34.7	10.2	3.01	.59	.75	.92	33.3	9.8	3.40	.60	.77	.94
	1370	645	37.9	11.1	2.37	.59	.76	.92	36.6	10.7	2.66	.60	.78	.94	35.2	10.3	3.01	.61	.79	.96	33.7	9.9	3.41	.62	.81	.98
71°F (22°C)	1070	505	39.2	11.5	2.38	.41	.54	.67	37.9	11.1	2.68	.42	.55	.68	36.4	10.7	3.02	.42	.56	.70	34.9	10.2	3.42	.42	.57	.71
	1220	575	39.8	11.7	2.38	.42	.56	.70	38.4	11.3	2.68	.42	.57	.72	36.9	10.8	3.03	.43	.58	.73	35.4	10.4	3.43	.43	.59	.75
	1370	645	40.3	11.8	2.39	.43	.58	.74	38.9	11.4	2.68	.43	.59	.75	37.4	11.0	3.03	.43	.60	.77	35.8	10.5	3.43	.44	.61	.79

NOTE - For Temperatures and Capacities not shown in tables, see bulletin - Cooling Unit Rating Table Correction Factor Data in Miscellaneous Engineering Data section.

Entering Wet Bulb Temperature	Total Air Volume		Outdoor Air Temperature Entering Outdoor Coil																							
			85°F (29°C)						95°F (35°C)						105°F (41°C)						115°F (46°C)					
			Total Cooling Capacity		Comp Motor kW Input	Sensible To Total Ratio (S/T) Dry Bulb			Total Cooling Capacity		Comp Motor kW Input	Sensible To Total Ratio (S/T) Dry Bulb			Total Cooling Capacity		Comp Motor kW Input	Sensible To Total Ratio (S/T) Dry Bulb			Total Cooling Capacity		Comp Motor kW Input	Sensible To Total Ratio (S/T) Dry Bulb		
	cfm	L/s	kBtuh	kW		75°F 24°C	80°F 27°C	85°F 29°C	kBtuh	kW		75°F 24°C	80°F 27°C	85°F 29°C	kBtuh	kW		75°F 24°C	80°F 27°C	85°F 29°C	kBtuh	kW		75°F 24°C	80°F 27°C	85°F 29°C
13ACC-036 — C33-48B TXV with G60UHV-36B-090 COOLING CAPACITY																										
63°F (17°C)	1070	505	36.0	10.6	2.35	.71	.86	.99	34.8	10.2	2.65	.72	.87	1.00	33.4	9.8	2.99	.73	.89	1.00	32.0	9.4	3.38	.75	.92	1.00
	1220	575	36.8	10.8	2.36	.74	.90	1.00	35.5	10.4	2.65	.75	.92	1.00	34.2	10.0	3.00	.76	.94	1.00	32.8	9.6	3.39	.78	.96	1.00
	1370	645	37.5	11.0	2.36	.77	.94	1.00	36.2	10.6	2.66	.78	.96	1.00	34.9	10.2	3.00	.80	.97	1.00	33.5	9.8	3.40	.82	.99	1.00
67°F (19°C)	1070	505	38.4	11.3	2.37	.55	.68	.82	37.0	10.8	2.67	.56	.69	.84	35.6	10.4	3.01	.56	.70	.86	34.0	10.0	3.41	.57	.72	.88
	1220	575	39.1	11.5	2.38	.57	.71	.87	37.7	11.0	2.68	.57	.72	.89	36.2	10.6	3.02	.58	.74	.90	34.6	10.1	3.42	.59	.76	.93
	1370	645	39.7	11.6	2.38	.58	.74	.91	38.2	11.2	2.68	.59	.76	.93	36.7	10.8	3.02	.60	.78	.95	35.1	10.3	3.43	.61	.80	.97
71°F (22°C)	1070	505	41.0	12.0	2.39	.41	.53	.66	39.5	11.6	2.69	.41	.54	.67	38.0	11.1	3.04	.41	.55	.68	36.4	10.7	3.43	.42	.56	.69
	1220	575	41.7	12.2	2.40	.42	.55	.69	40.2	11.8	2.70	.42	.56	.70	38.6	11.3	3.04	.42	.57	.71	37.0	10.8	3.44	.43	.58	.73
	1370	645	42.3	12.4	2.40	.42	.57	.72	40.7	11.9	2.70	.43	.58	.73	39.1	11.5	3.05	.43	.59	.75	37.4	11.0	3.45	.43	.60	.77
13ACC-036 — C33-38A/B TXV with G60UHV-36A/B COOLING CAPACITY																										
63°F (17°C)	1070	505	36.3	10.6	2.36	.71	.87	.99	35.0	10.3	2.66	.72	.88	1.00	33.7	9.9	3.00	.74	.90	1.00	32.3	9.5	3.40	.75	.92	1.00
	1220	575	37.1	10.9	2.37	.75	.91	1.00	35.8	10.5	2.67	.76	.93	1.00	34.4	10.1	3.01	.77	.95	1.00	33.0	9.7	3.41	.79	.97	1.00
	1370	645	37.9	11.1	2.37	.78	.95	1.00	36.5	10.7	2.67	.79	.97	1.00	35.2	10.3	3.02	.81	.98	1.00	33.8	9.9	3.42	.83	1.00	1.00
67°F (19°C)	1070	505	38.6	11.3	2.38	.55	.69	.83	37.2	10.9	2.68	.56	.70	.85	35.8	10.5	3.02	.57	.71	.87	34.2	10.0	3.42	.58	.73	.89
	1220	575	39.3	11.5	2.39	.57	.72	.88	37.9	11.1	2.69	.58	.73	.89	36.4	10.7	3.03	.59	.75	.92	34.8	10.2	3.44	.60	.77	.94
	1370	645	39.9	11.7	2.39	.59	.75	.92	38.5	11.3	2.69	.60	.77	.94	36.9	10.8	3.04	.61	.79	.96	35.3	10.3	3.44	.62	.81	.98
71°F (22°C)	1070	505	41.2	12.1	2.40	.41	.54	.66	39.7	11.6	2.71	.41	.54	.67	38.2	11.2	3.05	.42	.55	.69	36.6	10.7	3.45	.42	.56	.70
	1220	575	41.9	12.3	2.41	.42	.56	.70	40.4	11.8	2.71	.42	.57	.71	38.8	11.4	3.06	.43	.57	.72	37.1	10.9	3.46	.43	.58	.74
	1370	645	42.5	12.5	2.41	.42	.58	.73	40.9	12.0	2.72	.43	.59	.74	39.3	11.5	3.07	.43	.60	.76	37.5	11.0	3.47	.44	.61	.79
13ACC-036 — CR26-30N-F TXV with G60DFV-36A-070 COOLING CAPACITY																										
63°F (17°C)	1070	505	34.3	10.1	2.34	.71	.87	.99	33.2	9.7	2.64	.72	.89	1.00	31.9	9.3	2.98	.74	.91	1.00	30.7	9.0	3.38	.75	.92	1.00
	1220	575	35.1	10.3	2.35	.74	.91	1.00	33.9	9.9	2.64	.76	.93	1.00	32.6	9.6	2.99	.77	.95	1.00	31.3	9.2	3.39	.79	.97	1.00
	1370	645	35.7	10.5	2.35	.78	.95	1.00	34.5	10.1	2.65	.79	.96	1.00	33.3	9.8	2.99	.81	.98	1.00	32.0	9.4	3.39	.83	.99	1.00
67°F (19°C)	1070	505	36.4	10.7	2.36	.56	.69	.83	35.2	10.3	2.65	.56	.70	.85	33.8	9.9	2.99	.57	.72	.87	32.4	9.5	3.39	.58	.73	.89
	1220	575	37.0	10.8	2.36	.57	.72	.88	35.7	10.5	2.66	.58	.73	.90	34.4	10.1	3.00	.59	.75	.91	32.9	9.6	3.40	.60	.77	.94
	1370	645	37.5	11.0	2.36	.59	.76	.92	36.2	10.6	2.66	.60	.77	.94	34.8	10.2	3.01	.61	.79	.95	33.4	9.8	3.40	.62	.81	.97
71°F (22°C)	1070	505	38.8	11.4	2.38	.41	.54	.67	37.5	11.0	2.68	.41	.55	.68	36.1	10.6	3.02	.42	.55	.69	34.6	10.1	3.41	.42	.56	.70
	1220	575	39.4	11.5	2.38	.42	.56	.70	38.0	11.1	2.68	.42	.57	.71	36.6	10.7	3.02	.42	.57	.73	35.1	10.3	3.43	.43	.59	.74
	1370	645	39.9	11.7	2.38	.43	.58	.73	38.5	11.3	2.69	.43	.59	.74	37.0	10.8	3.03	.43	.60	.76	35.4	10.4	3.43	.44	.61	.78
13ACC-036 — CR26-36N-F TXV with G60DFV-36A-070 COOLING CAPACITY																										
63°F (17°C)	1070	505	35.2	10.3	2.35	.71	.87	.99	33.9	9.9	2.65	.72	.88	1.00	32.7	9.6	2.99	.74	.90	1.00	31.3	9.2	3.38	.75	.92	1.00
	1220	575	35.9	10.5	2.36	.75	.91	1.00	34.7	10.2	2.65	.76	.93	1.00	33.4	9.8	2.99	.77	.95	1.00	32.0	9.4	3.39	.79	.97	1.00
	1370	645	36.6	10.7	2.36	.78	.95	1.00	35.4	10.4	2.66	.79	.97	1.00	34.1	10.0	3.00	.81	.98	1.00	32.7	9.6	3.40	.83	1.00	1.00
67°F (19°C)	1070	505	37.4	11.0	2.36	.55	.69	.83	36.0	10.6	2.67	.56	.70	.85	34.6	10.1	3.01	.57	.71	.87	33.2	9.7	3.40	.58	.73	.89
	1220	575	38.0	11.1	2.37	.57	.72	.88	36.7	10.8	2.67	.58	.73	.89	35.2	10.3	3.01	.59	.75	.92	33.7	9.9	3.41	.60	.77	.94
	1370	645	38.6	11.3	2.38	.59	.75	.92	37.2	10.9	2.67	.60	.77	.94	35.7	10.5	3.02	.61	.79	.96	34.2	10.0	3.42	.62	.81	.98
71°F (22°C)	1070	505	39.9	11.7	2.39	.41	.54	.66	38.4	11.3	2.69	.42	.55	.68	37.0	10.8	3.03	.42	.55	.69	35.4	10.4	3.43	.42	.56	.71
	1220	575	40.5	11.9	2.39	.42	.56	.70	39.1	11.5	2.69	.42	.56	.71	37.5	11.0	3.04	.42	.58	.72	35.9	10.5	3.44	.43	.59	.74
	1370	645	41.0	12.0	2.40	.43	.58	.73	39.5	11.6	2.70	.43	.59	.74	38.0	11.1	3.04	.43	.60	.76	36.4	10.7	3.44	.44	.61	.78
13ACC-036 — CR26-36W-F TXV with G60DFV-36B-090 COOLING CAPACITY																										
63°F (17°C)	1070	505	35.1	10.3	2.35	.71	.87	.99	33.9	9.9	2.65	.72	.88	1.00	32.6	9.6	2.99	.74	.90	1.00	31.2	9.1	3.38	.75	.93	1.00
	1220	575	35.9	10.5	2.36	.74	.91	1.00	34.6	10.1	2.65	.76	.93	1.00	33.3	9.8	2.99	.78	.95	1.00	32.0	9.4	3.39	.79	.97	1.00
	1370	645	36.6	10.7	2.36	.78	.95	1.00	35.3	10.3	2.66	.79	.97	1.00	34.0	10.0	3.00	.81	.98	1.00	32.7	9.6	3.40	.83	1.00	1.00
67°F (19°C)	1070	505	37.3	10.9	2.36	.55	.69	.83	36.0	10.6	2.67	.56	.70	.85	34.6	10.1	3.01	.57	.71	.86	33.1	9.7	3.40	.58	.73	.89
	1220	575	37.9	11.1	2.37	.57	.72	.88	36.6	10.7	2.67	.58	.73	.89	35.2	10.3	3.01	.59	.75	.92	33.6	9.8	3.41	.60	.77	.94
	1370	645	38.5	11.3	2.38	.59	.75	.92	37.1	10.9	2.67	.60	.77	.94	35.6	10.4	3.02	.61	.79	.96	34.1	10.0	3.42	.62	.81	.98
71°F (22°C)	1070	505	39.8	11.7	2.39	.41	.54	.66	38.4	11.3	2.69	.42	.55	.68	36.9	10.8	3.03	.42	.55	.69	35.3	10.3	3.43	.42	.56	.70
	1220	575	40.4	11.8	2.39	.42	.56	.70	39.0	11.4	2.69	.42	.57	.71	37.5	11.0	3.04	.42	.57	.72	35.9	10.5	3.44	.43	.59	.74
	1370	645	41.0	12.0	2.40	.42	.58	.73	39.5	11.6	2.70	.43	.59	.75	37.9	11.1	3.04	.43	.60	.76	36.3	10.6	3.44	.44	.61	.78
13ACC-036 — CR26-48N-F TXV with G60DFV-36B-090 COOLING CAPACITY																										
63°F (17°C)	1070	505	35.3	10.3	2.35	.70	.85	.99	34.1	10.0	2.64	.71	.87	1.00	32.7	9.6	2.98	.73	.89	1.00	31.4	9.2	3.38	.74	.91	1.00
	1220	575	36.1	10.6	2.35	.73	.90	1.00	34.8	10.2	2.65	.75	.92	1.00	33.5	9.8	2.99	.76	.93	1.00	32.0	9.4	3.39	.78	.96	1.00
	1370	645	36.8	10.8	2.36	.77	.94	1.00	35.5	10.4	2.66	.78	.95	1.00	34.1	10.0	3.00	.80	.98	1.00	32.7	9.6	3.39	.82	.99	1.00
67°F (19°C)	1070	505	37.7	11.0	2.37	.55	.68	.82	36.3	10.6	2.66	.56	.69	.83	34.9	10.2	3.01	.56	.70	.85	33.4	9.8	3.40	.57	.72	.88
	1220	575	38.4	11.3	2.37	.57	.71	.86	37.0	10.8	2.67	.57	.72	.88	35.5	10.4	3.01	.58	.74	.90	33.9	9.9	3.41	.59	.76	.93
	1370	645	38.9	11.4	2.38	.58	.74	.91	37.5	11.0	2.67	.59	.75	.92	36.0	10.6	3.02	.60	.77	.95	34.4	10.1	3.42	.61	.79	.97
71°F (22°C)	1070	505	40.2	11.8	2.39	.41	.53	.65	38.8	11.4	2.69	.41	.54	.67	37.3	10.9	3.03	.41	.55	.68	35.7	10.5	3.43	.42	.55	.69
	1220	575	40.9	12.0	2.40	.42	.55	.68	39.5	11.6	2.69	.42	.56	.70	37.9	11.1	3.04	.42	.57	.71	36.2	10.6	3.44	.42	.58	.73
	1370	645	41.5	12.2	2.40	.42	.57	.71	40.0	11.7	2.70	.42	.58	.73	38.4	11.3	3.05	.43	.59	.75	36.7	10.8	3.45	.43	.60	.77
13ACC-036 — CH33-36A/B-2F TXV with G60UHV-36A/B COOLING CAPACITY																										
63°F (17°C)	1070	505	34.5	10.1	2.35	.71	.86	.99	33.4	9.8	2.64	.72	.88	.99	32.1	9.4	2.99	.73	.90	1.00	30.8	9.0	3.38	.75	.91	1.00
	1220	575	35.3	10.3	2.35	.73	.90	1.00	34.1	10.0	2.65	.75	.92	1.00	32.8	9.6	3.00	.77	.94	1.00	31.5	9.2	3.39	.79	.96	1.00
	1370	645	35.9	10.5	2.36	.77	.94	1.00	34.7	10.2	2.66	.78	.96	1.00	33.4	9.8	3.00	.80	.97	1.00	32.2	9.4	3.39	.82	.99	1.00
67°F (19°C)	1070	505	36.7	10.8	2.36	.55	.68	.82	35.5	10.4	2.66	.56	.69	.84	34.1	10.0	3.00	.56	.71	.86	32.7	9.6	3.40	.57	.72	.88
	1220	575	37.4	11.0	2.37	.57	.71	.87	36.1	10.6	2.66	.57	.72	.89	34.7	10.2	3.01	.58	.74	.90	33.2	9.7	3.41	.59	.76	.93
	1370	645	37.9	11.1	2.37	.59	.74	.91	36.5	10.7	2.67	.59	.76	.93	35.1	10.3	3.02	.60	.78	.94	33.7	9.9	3.41	.61	.79	.96
71°F (22°C)	1070	505	39.2	11.5	2.38	.41	.53	.66	37.8	11.1	2.68	.41	.54	.67	36.4	10.7	3.02	.41	.55	.68	34.9	10.2	3.42	.42	.56	.70
	1220	575	39.8	11.7	2.39	.42	.55	.69	38.4	11.3	2.69	.42	.56	.70	36.9	10.8	3.03	.42	.57	.72	35.4	10.4	3.44	.43	.58	.73
	1370	645	40.3	11.8	2.39	.42	.57	.72	38.9	11.4	2.69	.43	.58	.73	37.4	11.0	3.04	.43	.59	.75	35.8	10.5	3.44	.43	.60	.77

NOTE - For Temperatures and Capacities not shown in tables, see bulletin - Cooling Unit Rating Table Correction Factor Data in Miscellaneous Engineering Data section.

Entering Wet Bulb Temperature	Total Air Volume		Outdoor Air Temperature Entering Outdoor Coil																							
			85°F (29°C)						95°F (35°C)						105°F (41°C)						115°F (46°C)					
			Total Cooling Capacity		Comp Motor kW Input	Sensible To Total Ratio (S/T) Dry Bulb			Total Cooling Capacity		Comp Motor kW Input	Sensible To Total Ratio (S/T) Dry Bulb			Total Cooling Capacity		Comp Motor kW Input	Sensible To Total Ratio (S/T) Dry Bulb			Total Cooling Capacity		Comp Motor kW Input	Sensible To Total Ratio (S/T) Dry Bulb		
	cfm	L/s	kBtuh	kW		75°F 24°C	80°F 27°C	85°F 29°C	kBtuh	kW		75°F 24°C	80°F 27°C	85°F 29°C	kBtuh	kW		75°F 24°C	80°F 27°C	85°F 29°C	kBtuh	kW		75°F 24°C	80°F 27°C	85°F 29°C
13ACC-036 — CH23-41 TXV with G60UHV-36A/B COOLING CAPACITY																										
63°F (17°C)	1070	505	35.7	10.5	2.35	.72	.87	1.00	34.4	10.1	2.65	.73	.89	1.00	33.1	9.7	2.98	.74	.91	1.00	31.8	9.3	3.38	.76	.93	1.00
	1220	575	36.5	10.7	2.36	.75	.92	1.00	35.2	10.3	2.65	.76	.94	1.00	33.9	9.9	2.99	.78	.96	1.00	32.5	9.5	3.39	.80	.97	1.00
	1370	645	37.2	10.9	2.36	.79	.96	1.00	36.0	10.6	2.66	.80	.97	1.00	34.6	10.1	3.00	.82	.99	1.00	33.3	9.8	3.40	.84	1.00	1.00
67°F (19°C)	1070	505	37.8	11.1	2.37	.56	.69	.84	36.5	10.7	2.67	.56	.70	.85	35.1	10.3	3.01	.57	.72	.87	33.6	9.8	3.40	.58	.73	.89
	1220	575	38.5	11.3	2.37	.58	.73	.88	37.1	10.9	2.67	.58	.74	.90	35.7	10.5	3.01	.59	.75	.92	34.1	10.0	3.41	.60	.78	.95
	1370	645	39.1	11.5	2.38	.60	.76	.93	37.7	11.0	2.68	.60	.78	.95	36.2	10.6	3.02	.61	.79	.97	34.6	10.1	3.42	.63	.82	.98
71°F (22°C)	1070	505	40.3	11.8	2.39	.41	.54	.67	38.9	11.4	2.69	.41	.55	.68	37.4	11.0	3.03	.42	.56	.70	35.8	10.5	3.43	.42	.57	.71
	1220	575	41.0	12.0	2.39	.42	.56	.70	39.5	11.6	2.70	.42	.57	.72	38.0	11.1	3.04	.43	.58	.73	36.3	10.6	3.44	.43	.59	.75
	1370	645	41.5	12.2	2.40	.43	.58	.74	40.0	11.7	2.70	.43	.59	.75	38.4	11.3	3.04	.44	.60	.77	36.8	10.8	3.44	.44	.62	.79
13ACC-036 — CH23-51 TXV with G60UHV-36A/B COOLING CAPACITY																										
63°F (17°C)	1070	505	35.6	10.4	2.35	.72	.87	1.00	34.3	10.1	2.64	.73	.89	1.00	33.0	9.7	2.98	.74	.91	1.00	31.6	9.3	3.37	.76	.93	1.00
	1220	575	36.4	10.7	2.35	.75	.92	1.00	35.1	10.3	2.65	.76	.94	1.00	33.8	9.9	2.99	.78	.96	1.00	32.4	9.5	3.39	.80	.97	1.00
	1370	645	37.2	10.9	2.36	.78	.96	1.00	35.9	10.5	2.66	.80	.97	1.00	34.5	10.1	3.00	.82	.99	1.00	33.2	9.7	3.39	.84	1.00	1.00
67°F (19°C)	1070	505	37.8	11.1	2.37	.56	.69	.83	36.4	10.7	2.66	.56	.70	.85	35.0	10.3	3.00	.57	.72	.87	33.5	9.8	3.40	.58	.73	.89
	1220	575	38.5	11.3	2.37	.57	.72	.88	37.1	10.9	2.67	.58	.74	.90	35.6	10.4	3.01	.59	.75	.92	34.1	10.0	3.41	.60	.77	.95
	1370	645	39.1	11.5	2.37	.59	.76	.93	37.6	11.0	2.68	.60	.78	.95	36.1	10.6	3.02	.61	.79	.97	34.6	10.1	3.42	.63	.81	.99
71°F (22°C)	1070	505	40.3	11.8	2.38	.41	.54	.67	38.9	11.4	2.69	.41	.55	.68	37.3	10.9	3.03	.42	.56	.69	35.8	10.5	3.43	.42	.56	.71
	1220	575	41.0	12.0	2.39	.42	.56	.70	39.5	11.6	2.69	.42	.57	.71	38.0	11.1	3.04	.42	.58	.73	36.3	10.6	3.44	.43	.59	.75
	1370	645	41.6	12.2	2.39	.43	.58	.73	40.1	11.8	2.70	.43	.59	.75	38.4	11.3	3.05	.44	.60	.77	36.8	10.8	3.44	.44	.61	.79
13ACC-036 — CH33-42B-2F TXV with G60UHV-36B-090 COOLING CAPACITY																										
63°F (17°C)	1070	505	35.9	10.5	2.36	.71	.86	.98	34.6	10.1	2.66	.72	.87	1.00	33.3	9.8	3.00	.73	.89	1.00	31.9	9.3	3.39	.74	.92	1.00
	1220	575	36.7	10.8	2.36	.74	.90	1.00	35.4	10.4	2.66	.75	.92	1.00	34.1	10.0	3.00	.77	.94	1.00	32.7	9.6	3.40	.78	.96	1.00
	1370	645	37.4	11.0	2.37	.77	.94	1.00	36.1	10.6	2.67	.78	.96	1.00	34.7	10.2	3.01	.80	.98	1.00	33.3	9.8	3.41	.82	.99	1.00
67°F (19°C)	1070	505	38.2	11.2	2.37	.55	.68	.82	36.9	10.8	2.67	.56	.69	.84	35.4	10.4	3.02	.56	.71	.86	33.9	9.9	3.41	.57	.72	.88
	1220	575	38.9	11.4	2.38	.57	.71	.87	37.5	11.0	2.68	.57	.72	.88	36.0	10.6	3.02	.58	.74	.90	34.5	10.1	3.42	.59	.76	.93
	1370	645	39.5	11.6	2.39	.58	.74	.91	38.1	11.2	2.68	.59	.76	.93	36.6	10.7	3.03	.60	.77	.95	35.0	10.3	3.43	.61	.80	.97
71°F (22°C)	1070	505	40.8	12.0	2.39	.41	.53	.66	39.4	11.5	2.70	.41	.54	.67	37.8	11.1	3.05	.42	.55	.68	36.2	10.6	3.44	.42	.56	.69
	1220	575	41.5	12.2	2.40	.42	.55	.69	40.0	11.7	2.71	.42	.56	.70	38.5	11.3	3.05	.42	.57	.71	36.8	10.8	3.45	.43	.58	.73
	1370	645	42.1	12.3	2.41	.42	.57	.72	40.5	11.9	2.71	.43	.58	.73	39.0	11.4	3.06	.43	.59	.75	37.3	10.9	3.46	.43	.60	.77
13ACC-036 — CH33-44/48B-2F TXV with G60UHV-36B-090 COOLING CAPACITY																										
63°F (17°C)	1070	505	36.4	10.7	2.37	.70	.86	.99	35.1	10.3	2.66	.72	.87	1.00	33.8	9.9	3.00	.73	.89	1.00	32.3	9.5	3.40	.74	.91	1.00
	1220	575	37.2	10.9	2.37	.74	.90	1.00	35.9	10.5	2.67	.75	.92	1.00	34.5	10.1	3.02	.77	.94	1.00	33.0	9.7	3.41	.78	.96	1.00
	1370	645	38.0	11.1	2.38	.77	.94	1.00	36.6	10.7	2.68	.78	.96	1.00	35.2	10.3	3.02	.80	.98	1.00	33.8	9.9	3.42	.82	.99	1.00
67°F (19°C)	1070	505	38.8	11.4	2.38	.55	.68	.82	37.4	11.0	2.68	.56	.69	.84	35.9	10.5	3.03	.56	.70	.85	34.4	10.1	3.43	.57	.72	.88
	1220	575	39.6	11.6	2.39	.56	.71	.87	38.1	11.2	2.69	.57	.72	.89	36.6	10.7	3.04	.58	.74	.91	35.0	10.3	3.44	.59	.76	.93
	1370	645	40.2	11.8	2.40	.58	.74	.91	38.7	11.3	2.70	.59	.76	.93	37.1	10.9	3.05	.60	.78	.95	35.5	10.4	3.44	.61	.80	.97
71°F (22°C)	1070	505	41.5	12.2	2.41	.41	.53	.65	40.0	11.7	2.71	.41	.54	.66	38.4	11.3	3.06	.42	.55	.68	36.8	10.8	3.46	.42	.56	.69
	1220	575	42.2	12.4	2.41	.42	.55	.69	40.7	11.9	2.72	.42	.56	.70	39.1	11.5	3.07	.42	.57	.71	37.3	10.9	3.47	.43	.58	.73
	1370	645	42.9	12.6	2.42	.42	.57	.72	41.3	12.1	2.72	.43	.58	.73	39.6	11.6	3.07	.43	.59	.75	37.8	11.1	3.47	.43	.60	.77
13ACC-036 — CB28UH-030 - CB29M-31 TXV COOLING CAPACITY																										
63°F (17°C)	950	450	33.5	9.8	2350	.72	.85	.96	32.4	9.5	2650	.73	.86	.97	31.2	9.1	3000	.74	.88	.99	30.0	8.8	3400	.75	.89	.99
	1050	495	34.1	10.0	2340	.74	.88	.98	32.9	9.6	2650	.75	.89	.99	31.7	9.3	3000	.76	.91	1.00	30.5	8.9	3390	.77	.92	1.00
	1150	540	34.6	10.1	2340	.76	.90	1.00	33.4	9.8	2650	.77	.92	1.00	32.2	9.4	2990	.78	.93	1.00	31.0	9.1	3390	.80	.95	1.00
67°F (19°C)	950	450	35.7	10.5	2340	.56	.69	.82	34.5	10.1	2640	.57	.70	.83	33.2	9.7	2990	.57	.71	.85	31.9	9.3	3390	.58	.72	.86
	1050	495	36.1	10.6	2340	.57	.71	.85	35.0	10.3	2640	.58	.72	.86	33.7	9.9	2990	.59	.73	.87	32.4	9.5	3380	.60	.75	.89
	1150	540	36.6	10.7	2340	.59	.73	.87	35.3	10.3	2640	.59	.74	.89	34.1	10.0	2990	.60	.76	.90	32.7	9.6	3380	.61	.77	.92
71°F (22°C)	950	450	37.9	11.1	2350	.42	.55	.67	36.7	10.8	2650	.43	.55	.68	35.4	10.4	3000	.43	.56	.69	34.0	10.0	3400	.43	.57	.70
	1050	495	38.4	11.3	2360	.43	.56	.69	37.2	10.9	2660	.43	.56	.70	35.8	10.5	3000	.43	.57	.71	34.5	10.1	3400	.44	.58	.73
	1150	540	38.8	11.4	2360	.43	.57	.71	37.6	11.0	2660	.43	.58	.72	36..	10.6	3010	.44	.59	.73	34.8	10.2	3400	.44	.60	.75
13ACC-036 — CB28UH-036 - CB29M-41 TXV COOLING CAPACITY																										
63°F (17°C)	1000	470	34.1	10.0	2330	.72	.86	.97	32.9	9.6	2640	.73	.87	.98	31.7	9.3	2980	.75	.89	.99	30.5	8.9	3380	.76	.91	1.00
	1200	565	35.1	10.3	2340	.76	.91	1.00	33.9	9.9	2640	.78	.93	1.00	32.7	9.6	2980	.79	.94	1.00	31.4	9.2	3380	.81	.96	1.00
	1400	660	36.0	10.6	2340	.80	.95	1.00	34.8	10.2	2640	.82	.97	1.00	33.6	9.8	2990	.83	.98	1.00	32.3	9.5	3390	.85	.99	1.00
67°F (19°C)	1000	470	36.2	10.6	2340	.57	.70	.83	35.0	10.3	2650	.57	.71	.84	33.7	9.9	2990	.58	.72	.86	32.4	9.5	3390	.59	.73	.87
	1200	565	37.1	10.9	2350	.59	.74	.88	35.9	10.5	2650	.60	.75	.90	34.5	10.1	3000	.61	.77	.91	33.1	9.7	3390	.61	.78	.93
	1400	660	37.8	11.1	2360	.61	.78	.93	36.5	10.7	2660	.62	.80	.94	35.1	10.3	3000	.63	.81	.96	33.7	9.9	3400	.64	.83	.97
71°F (22°C)	1000	470	38.6	11.3	2360	.43	.55	.67	37.3	10.9	2670	.43	.56	.68	35.9	10.5	3010	.43	.56	.70	34.5	10.1	3410	.43	.57	.71
	1200	565	39.5	11.6	2370	.43	.58	.72	38.2	11.2	2670	.44	.58	.73	36.7	10.8	3020	.44	.59	.74	35.2	10.3	3420	.44	.60	.76
	1400	660	40.1	11.8	2380	.44	.60	.76	38.8	11.4	2680	.45	.61	.77	37.3	10.9	3030	.45	.62	.79	35.8	10.5	3430	.45	.63	.81
13ACC-036 — CB28UH-042 - CB29M-46 TXV COOLING CAPACITY																										
63°F (17°C)	1000	470	35.0	10.3	2360	.72	.86	.97	33.8	9.9	2660	.73	.87	.98	32.5	9.5	3000	.74	.89	1.00	31.2	9.1	3400	.76	.90	1.00
	1200	565	36.1	10.6	2370	.76	.91	1.00	34.8	10.2	2670	.77	.93	1.00	33.5	9.8	3020	.79	.94	1.00	32.2	9.4	3410	.80	.96	1.00
	1400	660	37.0	10.8	2370	.80	.96	1.00	35.7	10.5	2680	.82	.97	1.00	34.4	10.1	3020	.83	.98	1.00	33.1	9.7	3420	.85	1.00	1.00
67°F (19°C)	1000	470	37.3	10.9	2380	.57	.70	.82	36.0	10.6	2680	.57	.71	.84	34.6	10.1	3030	.58	.72	.85	33.1	9.7	3430	.59	.73	.87
	1200	565	38.2	11.2	2390	.59	.74	.88	36.9	10.8	2690	.60	.75	.89	35.4	10.4	3040	.60	.76	.91	33.9	9.9	3440	.61	.78	.93
	1400	660	39.0	11.4	2390	.61	.78	.93	37.6	11.0	2700	.62	.79	.94	36.1	10.6	3050	.63	.81	.96	34.6	10.1	3440	.64	.83	.98
71°F (22°C)	1000	470	39.8	11.7	2400	.43	.55	.67	38.4	11.3	2700	.43	.55	.68	36.9	10.8	3050	.43	.56	.69	35.4	10.4	3450	.43	.57	.71
	1200	565	40.7	11.9	2410	.43	.57	.71	39.3	11.5	2710	.44	.58	.73	37.8	11.1	3060	.44	.59	.74	36.2	10.6	3470	.44	.60	.76
	1400	660	41.5	12.2	2420	.44	.60	.76	40.0	11.7	2720	.45	.61	.77	38.4	11.3	3070	.45	.62	.79	36.8	10.8	3470	.45	.63	.81

NOTE - For Temperatures and Capacities not shown in tables, see bulletin - Cooling Unit Rating Table Correction Factor Data in Miscellaneous Engineering Data section.

Entering Wet Bulb Temperature	Total Air Volume		Outdoor Air Temperature Entering Outdoor Coil																							
			85°F (29°C)						95°F (35°C)						105°F (41°C)						115°F (46°C)					
			Total Cooling Capacity		Comp Motor kW Input	Sensible To Total Ratio (S/T) Dry Bulb			Total Cooling Capacity		Comp Motor kW Input	Sensible To Total Ratio (S/T) Dry Bulb			Total Cooling Capacity		Comp Motor kW Input	Sensible To Total Ratio (S/T) Dry Bulb			Total Cooling Capacity		Comp Motor kW Input	Sensible To Total Ratio (S/T) Dry Bulb		
	cfm	L/s	kBtuh	kW		75°F 24°C	80°F 27°C	85°F 29°C	kBtuh	kW		75°F 24°C	80°F 27°C	85°F 29°C	kBtuh	kW		75°F 24°C	80°F 27°C	85°F 29°C	kBtuh	kW		75°F 24°C	80°F 27°C	85°F 29°C
13ACC-036 — CB30M-31 - CB30U-31 TXV COOLING CAPACITY																										
63°F (17°C)	1050	495	35.4	10.4	2440	.73	.87	.98	34.2	10.0	2750	.74	.88	.99	32.9	9.6	3110	.75	.90	1.00	31.5	9.2	3520	.77	.92	1.00
	1150	540	35.9	10.5	2440	.75	.90	1.00	34.7	10.2	2760	.76	.91	1.00	33.4	9.8	3110	.78	.93	1.00	32.0	9.4	3520	.79	.95	1.00
	1250	590	36.4	10.7	2450	.77	.92	1.00	35.2	10.3	2760	.78	.94	1.00	33.9	9.9	3120	.80	.95	1.00	32.5	9.5	3530	.82	.97	1.00
67°F (19°C)	1050	495	37.6	11.0	2460	.57	.71	.84	36.3	10.6	2770	.58	.72	.85	34.9	10.2	3130	.58	.73	.87	33.5	9.8	3540	.59	.74	.89
	1150	540	38.1	11.2	2460	.58	.73	.86	36.8	10.8	2780	.59	.74	.88	35.4	10.4	3140	.60	.75	.90	33.9	9.9	3550	.61	.77	.92
	1250	590	38.6	11.3	2460	.59	.75	.89	37.2	10.9	2780	.60	.76	.91	35.7	10.5	3140	.61	.78	.93	34.2	10.0	3550	.62	.79	.94
71°F (22°C)	1050	495	40.2	11.8	2480	.43	.55	.68	38.8	11.4	2800	.43	.56	.69	37.3	10.9	3160	.43	.57	.70	35.7	10.5	3570	.43	.58	.72
	1150	540	40.7	11.9	2490	.43	.57	.70	39.2	11.5	2800	.43	.57	.71	37.7	11.0	3160	.44	.58	.73	36.1	10.6	3580	.44	.59	.75
	1250	590	41.1	12.0	2490	.44	.58	.72	39.6	11.6	2800	.44	.59	.74	38.1	11.2	3170	.44	.60	.75	36.5	10.7	3580	.45	.61	.77
13ACC-036 — CB30M-41 - CB30U-41/46 TXV COOLING CAPACITY																										
63°F (17°C)	1000	470	35.4	10.4	2340	.72	.86	.97	34.2	10.0	2640	.73	.87	.99	32.9	9.6	2980	.74	.89	1.00	31.5	9.2	3370	.76	.90	1.00
	1200	565	36.5	10.7	2350	.76	.91	1.00	35.3	10.3	2650	.77	.93	1.00	33.9	9.9	2990	.79	.94	1.00	32.5	9.5	3390	.80	.96	1.00
	1400	660	37.5	11.0	2360	.80	.96	1.00	36.2	10.6	2660	.82	.97	1.00	34.8	10.2	3000	.83	.99	1.00	33.5	9.8	3400	.85	1.00	1.00
67°F (19°C)	1000	470	37.7	11.0	2360	.56	.69	.82	36.4	10.7	2660	.57	.70	.84	35.0	10.3	3000	.58	.72	.85	33.5	9.8	3400	.58	.73	.87
	1200	565	38.8	11.4	2370	.59	.74	.88	37.4	11.0	2670	.60	.75	.89	35.9	10.5	3010	.60	.76	.91	34.4	10.1	3410	.61	.78	.93
	1400	660	39.5	11.6	2370	.61	.78	.93	38.1	11.2	2680	.62	.79	.95	36.6	10.7	3020	.63	.81	.96	35.0	10.3	3420	.64	.83	.98
71°F (22°C)	1000	470	40.3	11.8	2380	.42	.55	.67	38.9	11.4	2680	.43	.55	.68	37.4	11.0	3030	.43	.56	.69	35.9	10.5	3430	.43	.57	.71
	1200	565	41.3	12.1	2390	.43	.57	.71	39.9	11.7	2690	.44	.58	.73	38.3	11.2	3040	.44	.59	.74	36.7	10.8	3440	.44	.60	.76
	1400	660	42.1	12.3	2400	.44	.60	.76	40.6	11.9	2700	.45	.61	.77	38.9	11.4	3050	.45	.62	.79	37.3	10.9	3450	.45	.63	.81
13ACC-036 — CB30M-46 TXV COOLING CAPACITY																										
63°F (17°C)	1000	470	35.5	10.4	2340	.72	.86	.97	34.2	10.0	2640	.73	.87	.99	32.9	9.6	2990	.74	.89	1.00	31.5	9.2	3380	.76	.90	1.00
	1200	565	36.6	10.7	2350	.76	.91	1.00	35.3	10.3	2650	.77	.93	1.00	33.9	9.9	3000	.79	.94	1.00	32.6	9.6	3390	.80	.96	1.00
	1400	660	37.5	11.0	2360	.80	.96	1.00	36.2	10.6	2660	.82	.97	1.00	34.9	10.2	3010	.83	.99	1.00	33.5	9.8	3410	.85	1.00	1.00
67°F (19°C)	1000	470	37.8	11.1	2360	.56	.69	.82	36.5	10.7	2660	.57	.70	.84	35.0	10.3	3010	.58	.72	.85	33.6	9.8	3410	.58	.73	.87
	1200	565	38.8	11.4	2370	.59	.74	.88	37.4	11.0	2670	.60	.75	.89	35.9	10.5	3020	.60	.76	.91	34.4	10.1	3420	.61	.78	.93
	1400	660	39.6	11.6	2380	.61	.78	.93	38.1	11.2	2680	.62	.79	.95	36.6	10.7	3030	.63	.81	.96	35.1	10.3	3420	.64	.83	.98
71°F (22°C)	1000	470	40.3	11.8	2390	.42	.55	.67	38.9	11.4	2690	.43	.55	.68	37.4	11.0	3040	.43	.56	.69	35.9	10.5	3440	.43	.57	.71
	1200	565	41.4	12.1	2400	.43	.57	.71	39.9	11.7	2700	.44	.58	.73	38.3	11.2	3050	.44	.59	.74	36.7	10.8	3450	.44	.60	.76
	1400	660	42.1	12.3	2400	.44	.60	.76	40.6	11.9	2710	.45	.61	.77	39.0	11.4	3060	.45	.62	.79	37.3	10.9	3450	.45	.63	.81
13ACC-036 — CB31MV-41 TXV COOLING CAPACITY																										
63°F (17°C)	1135	535	35.9	10.5	2340	.75	.90	1.00	34.6	10.1	2640	.76	.91	1.00	33.3	9.8	2990	.78	.93	1.00	31.9	9.3	3380	.79	.95	1.00
	1275	600	36.5	10.7	2350	.78	.93	1.00	35.2	10.3	2650	.79	.94	1.00	33.9	9.9	2990	.80	.96	1.00	32.5	9.5	3390	.82	.98	1.00
	1400	660	37.1	10.9	2350	.80	.96	1.00	35.8	10.5	2650	.82	.97	1.00	34.5	10.1	3000	.83	.99	1.00	33.1	9.7	3400	.85	1.00	1.00
67°F (19°C)	1135	535	38.1	11.2	2360	.58	.73	.86	36.7	10.8	2660	.59	.74	.88	35.3	10.3	3010	.60	.75	.90	33.8	9.9	3410	.61	.77	.92
	1275	600	38.7	11.3	2370	.60	.75	.90	37.2	10.9	2670	.61	.77	.91	35.8	10.5	3020	.61	.78	.93	34.2	10.0	3410	.63	.80	.95
	1400	660	39.1	11.5	2370	.61	.78	.93	37.6	11.0	2670	.62	.79	.95	36.2	10.6	3020	.63	.81	.96	34.6	10.1	3410	.64	.83	.98
71°F (22°C)	1135	535	40.6	11.9	2390	.43	.57	.70	39.2	11.5	2690	.43	.57	.71	37.7	11.0	3040	.44	.58	.73	36.1	10.6	3430	.44	.59	.74
	1275	600	41.2	12.1	2390	.44	.58	.73	39.7	11.6	2690	.44	.59	.74	38.1	11.2	3040	.44	.60	.76	36.5	10.7	3440	.45	.61	.78
	1400	660	41.6	12.2	2390	.44	.60	.76	40.1	11.8	2700	.45	.61	.77	38.5	11.3	3050	.45	.62	.79	36.8	10.8	3440	.45	.63	.81
13ACC-036 — CB30M-51 - CB30U-51 TXV COOLING CAPACITY																										
63°F (17°C)	1000	470	36.1	10.6	2350	.72	.85	.97	34.8	10.2	2660	.73	.87	.99	33.4	9.8	3000	.74	.88	1.00	32.0	9.4	3400	.75	.90	1.00
	1200	565	37.3	10.9	2370	.76	.91	1.00	35.9	10.5	2670	.77	.93	1.00	34.5	10.1	3010	.79	.94	1.00	33.0	9.7	3410	.80	.96	1.00
	1400	660	38.3	11.2	2370	.80	.96	1.00	36.9	10.8	2680	.82	.98	1.00	35.5	10.4	3020	.83	.99	1.00	34.1	10.0	3420	.85	1.00	1.00
67°F (19°C)	1000	470	38.5	11.3	2380	.56	.69	.82	37.1	10.9	2680	.57	.70	.83	35.7	10.5	3030	.58	.71	.85	34.1	10.0	3420	.58	.73	.87
	1200	565	39.6	11.6	2390	.59	.73	.88	38.2	11.2	2690	.59	.75	.89	36.6	10.7	3040	.60	.76	.91	35.0	10.3	3440	.61	.78	.93
	1400	660	40.5	11.9	2390	.61	.78	.93	39.0	11.4	2700	.62	.79	.95	37.3	10.9	3050	.63	.81	.97	35.7	10.5	3440	.64	.83	.99
71°F (22°C)	1000	470	41.2	12.1	2400	.42	.54	.66	39.7	11.6	2710	.43	.55	.68	38.1	11.2	3060	.43	.56	.69	36.5	10.7	3460	.43	.57	.70
	1200	565	42.3	12.4	2410	.43	.57	.71	40.8	12.0	2720	.44	.58	.72	39.1	11.5	3070	.44	.59	.74	37.4	11.0	3470	.44	.60	.76
	1400	660	43.1	12.6	2420	.44	.60	.75	41.5	12.2	2720	.45	.61	.77	39.8	11.7	3080	.45	.62	.79	38.0	11.1	3480	.45	.63	.81
13ACC-036 — CB31MV-51 TXV COOLING CAPACITY																										
63°F (17°C)	1205	570	37.0	10.8	2360	.76	.91	1.00	35.7	10.5	2660	.77	.93	1.00	34.3	10.1	3010	.79	.95	1.00	32.8	9.6	3400	.80	.97	1.00
	1375	650	37.9	11.1	2370	.80	.95	1.00	36.5	10.7	2670	.81	.97	1.00	35.1	10.3	3020	.83	.99	1.00	33.7	9.9	3420	.85	1.00	1.00
67°F (19°C)	1205	570	39.4	11.5	2380	.59	.74	.88	37.9	11.1	2680	.59	.75	.89	36.4	10.7	3030	.60	.76	.91	34.8	10.2	3430	.61	.78	.94
	1375	650	40.1	11.8	2390	.61	.77	.92	38.6	11.3	2690	.62	.79	.94	37.0	10.8	3040	.63	.80	.96	35.3	10.3	3440	.64	.82	.98
71°F (22°C)	1205	570	42.0	12.3	2410	.43	.57	.71	40.5	11.9	2710	.44	.58	.72	38.9	11.4	3060	.44	.59	.74	37.1	10.9	3460	.44	.60	.76
	1375	650	42.7	12.5	2420	.44	.60	.75	41.1	12.0	2720	.44	.60	.76	39.5	11.6	3070	.45	.62	.78	37.7	11.0	3470	.45	.63	.80
13ACC-036 — CVP10-46/EC10Q4 TXV COOLING CAPACITY																										
63°F (17°C)	1050	495	34.3	10.1	2300	.75	.89	1.00	33.1	9.7	2590	.76	.91	1.00	31.8	9.3	2930	.78	.93	1.00	30.4	8.9	3320	.79	.95	1.00
	1200	565	35.1	10.3	2310	.78	.94	1.00	33.9	9.9	2600	.80	.95	1.00	32.5	9.5	2940	.81	.97	1.00	31.1	9.1	3330	.83	.99	1.00
	1350	635	35.8	10.5	2310	.82	.97	1.00	34.6	10.1	2610	.83	.99	1.00	33.2	9.7	2950	.85	1.00	1.00	31.9	9.3	3330	.87	1.00	1.00
67°F (19°C)	1050	495	36.5	10.7	2320	.59	.73	.86	35.2	10.3	2610	.59	.74	.88	33.8	9.9	2950	.60	.75	.90	32.3	9.5	3340	.61	.77	.92
	1200	565	37.3	10.9	2320	.61	.76	.90	35.9	10.5	2620	.61	.77	.92	34.4	10.1	2960	.62	.79	.94	32.9	9.6	3350	.63	.81	.96
	1350	635	37.8	11.1	2330	.62	.79	.94	36.4	10.7	2620	.63	.81	.96	34.9	10.2	2960	.64	.83	.98	33.3	9.8	3350	.66	.85	1.00
71°F (22°C)	1050	495	39.0	11.4	2340	.44	.57	.70	37.6	11.0	2630	.44	.58	.71	36.1	10.6	2980	.44	.58	.73	34.5	10.1	3370	.45	.59	.74
	1200	565	39.7	11.6	2340	.44	.59	.73	38.2	11.2	2640	.45	.60	.75	36.7	10.8	2980	.45	.61	.76	35.1	10.3	3380	.45	.62	.78
	1350	635	40.3	11.8	2350	.45	.61	.77	38.8	11.4	2650	.46	.62	.78	37.2	10.9	2990	.46	.63	.80	35.5	10.4	3380	.46	.64	.82

RATINGS — 3 TON (-036)

NOTE - For Temperatures and Capacities not shown in tables, see bulletin - Cooling Unit Rating Table Correction Factor Data in Miscellaneous Engineering Data section.

Entering Wet Bulb Temperature	Total Air Volume		Outdoor Air Temperature Entering Outdoor Coil																							
			85°F (29°C)						95°F (35°C)						105°F (41°C)						115°F (46°C)					
			Total Cooling Capacity		Comp Motor kW Input	Sensible To Total Ratio (S/T) Dry Bulb			Total Cooling Capacity		Comp Motor kW Input	Sensible To Total Ratio (S/T) Dry Bulb			Total Cooling Capacity		Comp Motor kW Input	Sensible To Total Ratio (S/T) Dry Bulb			Total Cooling Capacity		Comp Motor kW Input	Sensible To Total Ratio (S/T) Dry Bulb		
	cfm	L/s	kBtuh	kW		75°F 24°C	80°F 27°C	85°F 29°C	kBtuh	kW		75°F 24°C	80°F 27°C	85°F 29°C	kBtuh	kW		75°F 24°C	80°F 27°C	85°F 29°C	kBtuh	kW		75°F 24°C	80°F 27°C	85°F 29°C
13ACC-036 — CVP10-41/EC10Q3 TXV COOLING CAPACITY																										
63°F (17°C)	1050	495	34.6	10.1	2300	.75	.90	1.00	33.3	9.8	2600	.77	.91	1.00	32.0	9.4	2940	.78	.93	1.00	30.6	9.0	3320	.80	.95	1.00
	1200	565	35.4	10.4	2310	.79	.94	1.00	34.1	10.0	2600	.80	.96	1.00	32.7	9.6	2940	.82	.98	1.00	31.4	9.2	3330	.84	1.00	1.00
	1350	635	36.1	10.6	2310	.82	.98	1.00	34.8	10.2	2610	.84	.99	1.00	33.5	9.8	2950	.85	1.00	1.00	32.1	9.4	3340	.87	1.00	1.00
67°F (19°C)	1050	495	36.7	10.8	2320	.59	.73	.86	35.4	10.4	2620	.60	.74	.88	34.0	10.0	2950	.60	.76	.90	32.5	9.5	3340	.61	.77	.92
	1200	565	37.5	11.0	2320	.61	.76	.91	36.1	10.6	2620	.62	.78	.93	34.6	10.1	2960	.63	.79	.95	33.0	9.7	3350	.64	.81	.97
	1350	635	38.0	11.1	2330	.63	.80	.95	36.6	10.7	2620	.64	.81	.97	35.1	10.3	2970	.65	.83	.99	33.5	9.8	3360	.66	.85	1.00
71°F (22°C)	1050	495	39.2	11.5	2340	.44	.57	.70	37.8	11.1	2640	.44	.58	.72	36.3	10.6	2980	.44	.59	.73	34.7	10.2	3370	.45	.60	.75
	1200	565	39.9	11.7	2350	.45	.59	.74	38.5	11.3	2640	.45	.60	.75	36.9	10.8	2990	.45	.61	.77	35.2	10.3	3380	.46	.62	.79
	1350	635	40.5	11.9	2350	.45	.61	.77	39.0	11.4	2650	.46	.62	.79	37.3	10.9	2990	.46	.64	.81	35.7	10.5	3380	.47	.65	.83

RATINGS — 3 TON (-037)

Entering Wet Bulb Temperature	Total Air Volume		85°F (29°C)						95°F (35°C)						105°F (41°C)						115°F (46°C)					
	cfm	L/s	kBtuh	kW	kW Input	75°F 24°C	80°F 27°C	85°F 29°C	kBtuh	kW	kW Input	75°F 24°C	80°F 27°C	85°F 29°C	kBtuh	kW	kW Input	75°F 24°C	80°F 27°C	85°F 29°C	kBtuh	kW	kW Input	75°F 24°C	80°F 27°C	85°F 29°C
13ACC-037 — C23-41 TXV and RFC COOLING CAPACITY																										
63°F (17°C)	1050	495	33.1	9.7	2.17	.71	.88	1.00	32.0	9.4	2.45	.73	.90	1.00	30.9	9.1	2.77	.74	.91	1.00	29.6	8.7	3.13	.76	.94	1.00
	1200	565	33.9	9.9	2.18	.75	.92	1.00	32.7	9.6	2.46	.76	.94	1.00	31.5	9.2	2.78	.78	.96	1.00	30.3	8.9	3.13	.80	.98	1.00
	1350	635	34.5	10.1	2.18	.78	.96	1.00	33.4	9.8	2.46	.80	.97	1.00	32.2	9.4	2.78	.82	.99	1.00	31.0	9.1	3.13	.84	1.00	1.00
67°F (19°C)	1050	495	35.1	10.3	2.18	.55	.69	.84	33.9	9.9	2.46	.56	.71	.86	32.6	9.6	2.78	.57	.72	.88	31.3	9.2	3.13	.58	.73	.90
	1200	565	35.7	10.5	2.18	.57	.73	.89	34.5	10.1	2.46	.58	.74	.91	33.2	9.7	2.78	.59	.76	.93	31.8	9.3	3.14	.60	.77	.95
	1350	635	36.2	10.6	2.19	.59	.76	.93	34.9	10.2	2.47	.60	.78	.95	33.6	9.8	2.79	.61	.80	.97	32.2	9.4	3.14	.62	.82	.99
71°F (22°C)	1050	495	37.5	11.0	2.20	.41	.54	.67	36.2	10.6	2.48	.41	.55	.68	34.8	10.2	2.79	.41	.55	.69	33.4	9.8	3.15	.42	.56	.71
	1200	565	38.0	11.1	2.20	.42	.56	.70	36.7	10.8	2.48	.42	.57	.72	35.3	10.3	2.80	.42	.58	.73	33.9	9.9	3.15	.43	.59	.75
	1350	635	38.5	11.3	2.20	.42	.58	.74	37.1	10.9	2.48	.43	.59	.75	35.7	10.5	2.80	.43	.60	.77	34.2	10.0	3.16	.44	.61	.79
13ACC-037 — C23-46 TXV COOLING CAPACITY																										
63°F (17°C)	1050	495	33.5	9.8	2.16	.71	.87	1.00	32.3	9.5	2.44	.72	.90	1.00	31.1	9.1	2.76	.74	.91	1.00	29.9	8.8	3.11	.75	.93	1.00
	1200	565	34.2	10.0	2.17	.74	.92	1.00	33.1	9.7	2.44	.76	.94	1.00	31.8	9.3	2.76	.78	.96	1.00	30.6	9.0	3.11	.80	.98	1.00
	1350	635	34.9	10.2	2.17	.78	.96	1.00	33.7	9.9	2.45	.80	.97	1.00	32.5	9.5	2.76	.81	.99	1.00	31.3	9.2	3.11	.84	1.00	1.00
67°F (19°C)	1050	495	35.6	10.4	2.17	.55	.69	.84	34.3	10.1	2.45	.56	.70	.85	33.0	9.7	2.77	.57	.71	.88	31.6	9.3	3.12	.58	.73	.90
	1200	565	36.2	10.6	2.17	.57	.72	.88	34.9	10.2	2.46	.58	.73	.90	33.6	9.8	2.77	.59	.75	.93	32.2	9.4	3.12	.60	.77	.95
	1350	635	36.7	10.8	2.18	.59	.76	.93	35.4	10.4	2.46	.60	.77	.95	34.0	10.0	2.78	.61	.79	.96	32.6	9.6	3.13	.62	.81	.99
71°F (22°C)	1050	495	38.0	11.1	2.19	.41	.54	.67	36.6	10.7	2.47	.41	.55	.68	35.2	10.3	2.78	.42	.55	.69	33.8	9.9	3.14	.42	.56	.71
	1200	565	38.6	11.3	2.19	.42	.56	.70	37.2	10.9	2.47	.42	.56	.71	35.8	10.5	2.79	.42	.57	.73	34.3	10.1	3.14	.43	.58	.74
	1350	635	39.1	11.5	2.19	.42	.58	.73	37.7	11.0	2.48	.43	.58	.75	36.2	10.6	2.79	.43	.60	.77	34.7	10.2	3.14	.44	.61	.79
13ACC-037 — C23-46 RFC COOLING CAPACITY																										
63°F (17°C)	1050	495	35.3	10.3	2.18	.71	.87	1.00	34.0	10.0	2.46	.73	.89	1.00	32.8	9.6	2.78	.74	.91	1.00	31.4	9.2	3.13	.75	.93	1.00
	1200	565	36.0	10.6	2.18	.74	.92	1.00	34.8	10.2	2.46	.76	.94	1.00	33.5	9.8	2.78	.78	.96	1.00	32.2	9.4	3.14	.79	.97	1.00
	1350	635	36.7	10.8	2.19	.78	.96	1.00	35.5	10.4	2.46	.80	.98	1.00	34.2	10.0	2.78	.82	.99	1.00	32.9	9.6	3.14	.84	1.00	1.00
67°F (19°C)	1050	495	37.5	11.0	2.19	.55	.69	.84	36.1	10.6	2.47	.56	.70	.86	34.7	10.2	2.79	.57	.71	.88	33.3	9.8	3.15	.58	.73	.90
	1200	565	38.1	11.2	2.19	.57	.72	.88	36.7	10.8	2.48	.58	.74	.91	35.3	10.3	2.79	.59	.75	.93	33.8	9.9	3.15	.60	.77	.95
	1350	635	38.6	11.3	2.20	.59	.76	.93	37.2	10.9	2.48	.60	.77	.95	35.8	10.5	2.80	.61	.79	.96	34.3	10.1	3.15	.62	.81	.99
71°F (22°C)	1050	495	40.0	11.7	2.20	.41	.54	.67	38.6	11.3	2.49	.41	.54	.68	37.1	10.9	2.80	.41	.55	.69	35.5	10.4	3.16	.42	.56	.71
	1200	565	40.6	11.9	2.21	.42	.56	.70	39.2	11.5	2.49	.42	.56	.71	37.6	11.0	2.81	.42	.58	.73	36.0	10.6	3.17	.43	.59	.74
	1350	635	41.1	12.0	2.21	.42	.58	.73	39.6	11.6	2.50	.43	.59	.75	38.1	11.2	2.81	.43	.60	.77	36.5	10.7	3.17	.43	.61	.79
13ACC-037 — C33-36A/B/C TXV and RFC COOLING CAPACITY																										
63°F (17°C)	1050	495	34.2	10.0	2.16	.72	.89	1.00	33.0	9.7	2.44	.73	.90	1.00	31.8	9.3	2.75	.75	.92	1.00	30.5	8.9	3.10	.76	.94	1.00
	1200	565	34.9	10.2	2.17	.76	.93	1.00	33.7	9.9	2.44	.77	.95	1.00	32.5	9.5	2.76	.79	.97	1.00	31.2	9.1	3.11	.81	.99	1.00
	1350	635	35.6	10.4	2.17	.79	.97	1.00	34.4	10.1	2.45	.81	.99	1.00	33.2	9.7	2.76	.83	1.00	1.00	31.9	9.3	3.12	.85	1.00	1.00
67°F (19°C)	1050	495	36.2	10.6	2.17	.56	.70	.85	34.9	10.2	2.45	.57	.71	.87	33.5	9.8	2.77	.57	.73	.89	32.1	9.4	3.12	.58	.74	.91
	1200	565	36.8	10.8	2.17	.58	.73	.90	35.5	10.4	2.46	.59	.74	.92	34.1	10.0	2.77	.60	.76	.94	32.6	9.6	3.12	.61	.78	.96
	1350	635	37.3	10.9	2.18	.60	.77	.94	35.9	10.5	2.46	.61	.79	.96	34.5	10.1	2.77	.62	.81	.98	33.1	9.7	3.13	.63	.83	.99
71°F (22°C)	1050	495	38.6	11.3	2.18	.41	.54	.67	37.2	10.9	2.47	.41	.55	.69	35.7	10.5	2.78	.42	.56	.70	34.3	10.1	3.14	.42	.57	.72
	1200	565	39.1	11.5	2.19	.42	.57	.71	37.7	11.0	2.47	.42	.57	.72	36.3	10.6	2.79	.42	.58	.74	34.7	10.2	3.14	.43	.60	.76
	1350	635	39.6	11.6	2.19	.43	.59	.74	38.2	11.2	2.47	.43	.60	.76	36.7	10.8	2.79	.43	.61	.78	35.1	10.3	3.14	.44	.62	.80
13ACC-037 — C33-42B TXV and RFC COOLING CAPACITY																										
63°F (17°C)	1050	495	34.2	10.0	2.16	.72	.89	1.00	33.0	9.7	2.44	.73	.90	1.00	31.8	9.3	2.75	.75	.92	1.00	30.5	8.9	3.10	.76	.94	1.00
	1200	565	34.9	10.2	2.17	.76	.93	1.00	33.7	9.9	2.44	.77	.95	1.00	32.5	9.5	2.76	.79	.97	1.00	31.2	9.1	3.11	.81	.99	1.00
	1350	635	35.6	10.4	2.17	.79	.97	1.00	34.4	10.1	2.45	.81	.99	1.00	33.2	9.7	2.76	.83	1.00	1.00	31.9	9.3	3.12	.85	1.00	1.00
67°F (19°C)	1050	495	36.2	10.6	2.17	.56	.70	.85	34.9	10.2	2.45	.57	.71	.87	33.5	9.8	2.77	.57	.73	.89	32.1	9.4	3.12	.58	.74	.91
	1200	565	36.8	10.8	2.17	.58	.73	.90	35.5	10.4	2.46	.59	.74	.92	34.1	10.0	2.77	.60	.76	.94	32.6	9.6	3.12	.61	.78	.96
	1350	635	37.3	10.9	2.18	.60	.77	.94	35.9	10.5	2.46	.61	.79	.96	34.5	10.1	2.77	.62	.81	.98	33.1	9.7	3.13	.63	.83	.99
71°F (22°C)	1050	495	38.6	11.3	2.18	.41	.54	.67	37.2	10.9	2.47	.41	.55	.69	35.7	10.5	2.78	.42	.56	.70	34.3	10.1	3.14	.42	.57	.72
	1200	565	39.1	11.5	2.19	.42	.57	.71	37.7	11.0	2.47	.42	.57	.72	36.3	10.6	2.79	.42	.58	.74	34.7	10.2	3.14	.43	.60	.76
	1350	635	39.6	11.6	2.19	.43	.59	.74	38.2	11.2	2.47	.43	.60	.76	36.7	10.8	2.79	.43	.61	.78	35.1	10.3	3.14	.44	.62	.80
13ACC-037 — C26-31 TXV COOLING CAPACITY																										
63°F (17°C)	1050	495	34.3	10.1	2.17	.72	.88	1.00	33.1	9.7	2.45	.73	.90	1.00	31.8	9.3	2.77	.74	.92	1.00	30.5	8.9	3.12	.76	.94	1.00
	1200	565	35.1	10.3	2.18	.75	.93	1.00	33.8	9.9	2.46	.77	.95	1.00	32.5	9.5	2.77	.78	.97	1.00	31.2	9.1	3.13	.81	.99	1.00
	1350	635	35.7	10.5	2.18	.79	.97	1.00	34.5	10.1	2.46	.81	.99	1.00	33.3	9.8	2.78	.83	1.00	1.00	32.0	9.4	3.13	.85	1.00	1.00
67°F (19°C)	1050	495	36.4	10.7	2.19	.56	.69	.84	35.1	10.3	2.47	.56	.71	.86	33.7	9.9	2.78	.57	.72	.88	32.3	9.5	3.14	.58	.74	.90
	1200	565	37.0	10.8	2.19	.58	.73	.89	35.7	10.5	2.47	.58	.74	.92	34.3	10.1	2.79	.59	.76	.93	32.8	9.6	3.15	.60	.78	.96
	1350	635	37.6	11.0	2.19	.60	.76	.94	36.2	10.6	2.48	.60	.78	.96	34.7	10.2	2.79	.61	.80	.98	33.2	9.7	3.15	.63	.82	.99
71°F (22°C)	1050	495	38.8	11.4	2.20	.41	.54	.67	37.4	11.0	2.49	.41	.55	.68	36.0	10.6	2.80	.41	.56	.70	34.5	10.1	3.16	.42	.56	.71
	1200	565	39.5	11.6	2.21	.42	.56	.70	38.0	11.1	2.49	.42	.57	.72	36.5	10.7	2.81	.42	.58	.73	35.0	10.3	3.16	.43	.59	.75
	1350	635	40.0	11.7	2.21	.43	.58	.74	38.5	11.3	2.49	.43	.59	.76	37.0	10.8	2.81	.43	.60	.77	35.3	10.3	3.17	.44	.62	.80

NOTE - For Temperatures and Capacities not shown in tables, see bulletin - Cooling Unit Rating Table Correction Factor Data in Miscellaneous Engineering Data section.

Entering Wet Bulb Temperature	Total Air Volume		Outdoor Air Temperature Entering Outdoor Coil																							
			85°F (29°C)						95°F (35°C)						105°F (41°C)						115°F (46°C)					
			Total Cooling Capacity		Comp Motor kW Input	Sensible To Total Ratio (S/T) Dry Bulb			Total Cooling Capacity		Comp Motor kW Input	Sensible To Total Ratio (S/T) Dry Bulb			Total Cooling Capacity		Comp Motor kW Input	Sensible To Total Ratio (S/T) Dry Bulb			Total Cooling Capacity		Comp Motor kW Input	Sensible To Total Ratio (S/T) Dry Bulb		
	cfm	L/s	kBtuh	kW		75°F 24°C	80°F 27°C	85°F 29°C	kBtuh	kW		75°F 24°C	80°F 27°C	85°F 29°C	kBtuh	kW		75°F 24°C	80°F 27°C	85°F 29°C	kBtuh	kW		75°F 24°C	80°F 27°C	85°F 29°C
13ACC-037 — C26-31 RFC COOLING CAPACITY																										
63°F (17°C)	1050	495	33.3	9.8	2.17	.72	.88	1.00	32.1	9.4	2.44	.73	.90	1.00	30.9	9.1	2.76	.74	.92	1.00	29.6	8.7	3.11	.76	.94	1.00
	1200	565	34.1	10.0	2.17	.75	.93	1.00	32.9	9.6	2.45	.77	.94	1.00	31.6	9.3	2.76	.78	.97	1.00	30.3	8.9	3.12	.80	.99	1.00
	1350	635	34.7	10.2	2.17	.79	.97	1.00	33.5	9.8	2.45	.81	.99	1.00	32.3	9.5	2.77	.83	1.00	1.00	31.1	9.1	3.12	.85	1.00	1.00
67°F (19°C)	1050	495	35.4	10.4	2.18	.56	.69	.85	34.1	10.0	2.46	.56	.70	.86	32.7	9.6	2.77	.57	.72	.88	31.4	9.2	3.13	.58	.73	.91
	1200	565	36.0	10.6	2.18	.58	.73	.89	34.7	10.2	2.46	.58	.74	.91	33.3	9.8	2.78	.59	.76	.94	31.9	9.3	3.13	.60	.78	.96
	1350	635	36.5	10.7	2.19	.59	.76	.94	35.2	10.3	2.47	.60	.78	.96	33.8	9.9	2.78	.61	.80	.98	32.3	9.5	3.14	.63	.82	.99
71°F (22°C)	1050	495	37.7	11.0	2.19	.41	.54	.67	36.4	10.7	2.48	.41	.55	.68	35.0	10.3	2.79	.42	.56	.69	33.5	9.8	3.15	.42	.56	.71
	1200	565	38.3	11.2	2.20	.42	.56	.70	37.0	10.8	2.48	.42	.57	.72	35.5	10.4	2.80	.42	.58	.73	34.0	10.0	3.15	.43	.59	.75
	1350	635	38.8	11.4	2.21	.43	.58	.74	37.4	11.0	2.48	.43	.59	.75	35.9	10.5	2.80	.43	.60	.78	34.3	10.1	3.16	.44	.62	.80
13ACC-037 — C26-41 TXV COOLING CAPACITY																										
63°F (17°C)	1050	495	34.7	10.2	2.18	.72	.88	1.00	33.5	9.8	2.46	.73	.90	1.00	32.2	9.4	2.77	.75	.92	1.00	30.8	9.0	3.13	.76	.95	1.00
	1200	565	35.5	10.4	2.18	.76	.93	1.00	34.2	10.0	2.46	.77	.96	1.00	32.9	9.6	2.78	.79	.97	1.00	31.6	9.3	3.14	.81	.99	1.00
	1350	635	36.3	10.6	2.19	.80	.98	1.00	35.0	10.3	2.47	.81	.99	1.00	33.8	9.9	2.79	.83	1.00	1.00	32.5	9.5	3.14	.86	1.00	1.00
67°F (19°C)	1050	495	36.8	10.8	2.19	.56	.70	.84	35.5	10.4	2.47	.57	.71	.87	34.1	10.0	2.79	.57	.72	.89	32.6	9.6	3.15	.58	.74	.91
	1200	565	37.5	11.0	2.20	.58	.73	.90	36.1	10.6	2.48	.58	.74	.92	34.7	10.2	2.80	.60	.76	.94	33.2	9.7	3.15	.61	.79	.96
	1350	635	38.0	11.1	2.20	.60	.77	.95	36.6	10.7	2.48	.61	.79	.97	35.1	10.3	2.80	.62	.81	.99	33.6	9.8	3.16	.63	.83	1.00
71°F (22°C)	1050	495	39.3	11.5	2.21	.41	.54	.67	37.9	11.1	2.49	.41	.55	.68	36.4	10.7	2.81	.41	.56	.70	34.8	10.2	3.16	.42	.57	.71
	1200	565	40.0	11.7	2.21	.42	.56	.71	38.5	11.3	2.50	.42	.57	.72	36.9	10.8	2.82	.42	.58	.74	35.3	10.3	3.17	.43	.59	.76
	1350	635	40.5	11.9	2.22	.43	.59	.74	39.0	11.4	2.50	.43	.60	.76	37.3	10.9	2.82	.44	.61	.78	35.7	10.5	3.17	.44	.62	.81
13ACC-037 — C26-41 RFC COOLING CAPACITY																										
63°F (17°C)	1050	495	34.3	10.1	2.17	.72	.89	1.00	33.1	9.7	2.45	.73	.90	1.00	31.8	9.3	2.76	.74	.93	1.00	30.5	8.9	3.12	.76	.95	1.00
	1200	565	35.1	10.3	2.17	.76	.94	1.00	33.9	9.9	2.45	.77	.95	1.00	32.6	9.6	2.77	.79	.97	1.00	31.3	9.2	3.12	.81	.99	1.00
	1350	635	35.9	10.5	2.18	.79	.98	1.00	34.6	10.1	2.46	.81	.99	1.00	33.4	9.8	2.77	.83	1.00	1.00	32.1	9.4	3.13	.86	1.00	1.00
67°F (19°C)	1050	495	36.4	10.7	2.19	.56	.70	.85	35.1	10.3	2.46	.56	.71	.87	33.7	9.9	2.78	.57	.72	.89	32.2	9.4	3.13	.58	.74	.91
	1200	565	37.1	10.9	2.19	.58	.73	.90	35.7	10.5	2.47	.59	.75	.92	34.3	10.1	2.79	.59	.76	.94	32.8	9.6	3.14	.61	.79	.97
	1350	635	37.6	11.0	2.19	.60	.77	.95	36.2	10.6	2.47	.61	.79	.97	34.8	10.2	2.79	.62	.81	.98	33.2	9.7	3.15	.63	.83	1.00
71°F (22°C)	1050	495	38.9	11.4	2.20	.41	.54	.67	37.4	11.0	2.48	.41	.55	.68	36.0	10.6	2.80	.42	.56	.70	34.4	10.1	3.15	.42	.57	.72
	1200	565	39.5	11.6	2.20	.42	.57	.71	38.1	11.2	2.49	.42	.57	.72	36.5	10.7	2.80	.43	.58	.74	34.9	10.2	3.16	.43	.60	.76
	1350	635	40.0	11.7	2.21	.43	.59	.74	38.5	11.3	2.49	.43	.60	.76	36.9	10.8	2.81	.44	.61	.78	35.3	10.3	3.16	.44	.62	.80
13ACC-037 — C26-46 TXV and RFC COOLING CAPACITY																										
63°F (17°C)	1050	495	34.6	10.1	2.17	.72	.88	1.00	33.3	9.8	2.45	.73	.91	1.00	32.0	9.4	2.77	.75	.92	1.00	30.7	9.0	3.12	.77	.95	1.00
	1200	565	35.4	10.4	2.18	.75	.93	1.00	34.1	10.0	2.46	.77	.96	1.00	32.8	9.6	2.78	.79	.98	1.00	31.5	9.2	3.13	.81	.99	1.00
	1350	635	36.2	10.6	2.18	.79	.98	1.00	34.9	10.2	2.46	.81	.99	1.00	33.7	9.9	2.78	.83	1.00	1.00	32.4	9.5	3.13	.85	1.00	1.00
67°F (19°C)	1050	495	36.8	10.8	2.19	.56	.69	.84	35.4	10.4	2.47	.56	.71	.86	34.0	10.0	2.79	.57	.72	.89	32.5	9.5	3.14	.58	.74	.91
	1200	565	37.5	11.0	2.20	.58	.73	.90	36.1	10.6	2.48	.59	.74	.92	34.6	10.1	2.79	.59	.76	.94	33.1	9.7	3.14	.60	.78	.96
	1350	635	38.0	11.1	2.20	.60	.77	.95	36.6	10.7	2.48	.61	.79	.97	35.1	10.3	2.79	.62	.81	.99	33.5	9.8	3.15	.63	.83	1.00
71°F (22°C)	1050	495	39.3	11.5	2.21	.41	.54	.67	37.9	11.1	2.49	.41	.55	.68	36.3	10.6	2.81	.42	.56	.70	34.7	10.2	3.16	.42	.57	.71
	1200	565	40.0	11.7	2.22	.42	.56	.71	38.5	11.3	2.50	.42	.57	.72	36.9	10.8	2.81	.42	.58	.74	35.3	10.3	3.16	.43	.59	.76
	1350	635	40.5	11.9	2.22	.43	.59	.74	39.0	11.4	2.50	.43	.59	.76	37.3	10.9	2.81	.44	.61	.78	35.7	10.5	3.17	.44	.62	.81
13ACC-037 — C23-51 TXV COOLING CAPACITY																										
63°F (17°C)	1050	495	35.2	10.3	2.18	.71	.87	1.00	33.9	9.9	2.46	.72	.89	1.00	32.6	9.6	2.77	.74	.91	1.00	31.2	9.1	3.13	.76	.94	1.00
	1200	565	36.0	10.6	2.18	.74	.92	1.00	34.7	10.2	2.46	.76	.94	1.00	33.3	9.8	2.78	.78	.96	1.00	32.0	9.4	3.13	.80	.98	1.00
	1350	635	36.7	10.8	2.19	.78	.97	1.00	35.4	10.4	2.47	.80	.98	1.00	34.1	10.0	2.78	.82	1.00	1.00	32.8	9.6	3.14	.84	1.00	1.00
67°F (19°C)	1050	495	37.4	11.0	2.19	.55	.69	.84	36.1	10.6	2.47	.56	.70	.85	34.6	10.1	2.79	.57	.71	.88	33.1	9.7	3.15	.58	.73	.90
	1200	565	38.1	11.2	2.20	.57	.72	.89	36.7	10.8	2.48	.58	.74	.91	35.2	10.3	2.80	.59	.75	.93	33.7	9.9	3.15	.60	.77	.95
	1350	635	38.7	11.3	2.20	.59	.76	.93	37.2	10.9	2.48	.60	.77	.95	35.7	10.5	2.80	.61	.79	.97	34.2	10.0	3.16	.62	.82	.99
71°F (22°C)	1050	495	40.0	11.7	2.21	.41	.54	.67	38.6	11.3	2.49	.41	.54	.67	37.0	10.8	2.81	.41	.55	.69	35.4	10.4	3.16	.42	.56	.70
	1200	565	40.7	11.9	2.21	.42	.56	.70	39.2	11.5	2.50	.42	.56	.71	37.6	11.0	2.82	.42	.58	.73	36.0	10.6	3.17	.42	.59	.75
	1350	635	41.2	12.1	2.22	.42	.58	.73	39.7	11.6	2.50	.43	.59	.75	38.1	11.2	2.82	.43	.60	.77	36.4	10.7	3.17	.44	.61	.79
13ACC-037 — C23-51 RFC COOLING CAPACITY																										
63°F (17°C)	1050	495	34.6	10.1	2.17	.71	.88	1.00	33.3	9.8	2.45	.72	.90	1.00	32.0	9.4	2.77	.74	.92	1.00	30.7	9.0	3.12	.76	.94	1.00
	1200	565	35.4	10.4	2.18	.75	.92	1.00	34.1	10.0	2.46	.76	.94	1.00	32.8	9.6	2.78	.78	.96	1.00	31.4	9.2	3.13	.80	.98	1.00
	1350	635	36.1	10.6	2.18	.78	.96	1.00	34.8	10.2	2.47	.80	.98	1.00	33.5	9.8	2.78	.82	1.00	1.00	32.3	9.5	3.14	.84	1.00	1.00
67°F (19°C)	1050	495	36.8	10.8	2.19	.55	.69	.84	35.4	10.4	2.47	.56	.70	.86	34.0	10.0	2.79	.57	.72	.88	32.6	9.6	3.14	.58	.73	.90
	1200	565	37.5	11.0	2.19	.57	.72	.89	36.1	10.6	2.47	.58	.73	.91	34.6	10.1	2.79	.59	.75	.93	33.1	9.7	3.15	.60	.77	.95
	1350	635	38.0	11.1	2.20	.59	.76	.93	36.6	10.7	2.48	.60	.77	.95	35.1	10.3	2.80	.61	.79	.98	33.6	9.8	3.15	.62	.82	.99
71°F (22°C)	1050	495	39.3	11.5	2.21	.41	.54	.66	37.9	11.1	2.49	.41	.54	.68	36.4	10.7	2.80	.41	.55	.69	34.8	10.2	3.16	.42	.56	.71
	1200	565	40.0	11.7	2.21	.42	.56	.70	38.5	11.3	2.49	.42	.57	.71	37.0	10.8	2.81	.42	.58	.73	35.3	10.3	3.17	.43	.59	.75
	1350	635	40.5	11.9	2.22	.42	.58	.73	39.0	11.4	2.50	.43	.59	.75	37.4	11.0	2.82	.43	.60	.77	35.8	10.5	3.17	.44	.61	.79
13ACC-037 — C33-48B TXV COOLING CAPACITY																										
63°F (17°C)	1050	495	35.3	10.3	2.18	.71	.87	1.00	34.0	10.0	2.45	.72	.89	1.00	32.7	9.6	2.77	.73	.91	1.00	31.3	9.2	3.13	.75	.93	1.00
	1200	565	36.1	10.6	2.18	.74	.92	1.00	34.8	10.2	2.46	.76	.94	1.00	33.5	9.8	2.78	.78	.96	1.00	32.1	9.4	3.13	.79	.98	1.00
	1350	635	36.8	10.8	2.18	.78	.96	1.00	35.5	10.4	2.47	.79	.98	1.00	34.2	10.0	2.78	.81	.99	1.00	32.9	9.6	3.14	.84	1.00	1.00
67°F (19°C)	1050	495	37.6	11.0	2.19	.55	.68	.83	36.2	10.6	2.47	.56	.70	.85	34.8	10.2	2.79	.57	.71	.87	33.3	9.8	3.14	.57	.72	.90
	1200	565	38.3	11.2	2.20	.57	.72	.88	36.9	10.8	2.48	.58	.73	.90	35.4	10.4	2.79	.59	.75	.93	33.8	9.9	3.15	.60	.77	.95
	1350	635	38.8	11.4	2.20	.59	.75	.93	37.4	11.0	2.48	.59	.77	.95	35.9	10.5	2.80	.61	.79	.97	34.3	10.1	3.16	.62	.81	.99
71°F (22°C)	1050	495	40.1	11.8	2.21	.41	.54	.66	38.7	11.3	2.49	.41	.54	.67	37.2	10.9	2.81	.41	.55	.69	35.6	10.4	3.16	.42	.56	.70
	1200	565	40.8	12.0	2.21	.41	.55	.69	39.3	11.5	2.49	.42	.56	.71	37.8	11.1	2.81	.42	.57	.72	36.1	10.6	3.17	.43	.58	.74
	1350	635	41.4	12.1	2.22	.42	.57	.73	39.9	11.7	2.50	.43	.58	.74	38.3	11.2	2.82	.43	.60	.76	36.6	10.7	3.18	.43	.61	.79

NOTE - For Temperatures and Capacities not shown in tables, see bulletin - Cooling Unit Rating Table Correction Factor Data in Miscellaneous Engineering Data section.

Entering Wet Bulb Temperature	Total Air Volume		Outdoor Air Temperature Entering Outdoor Coil																							
			85°F (29°C)						95°F (35°C)						105°F (41°C)						115°F (46°C)					
			Total Cooling Capacity		Comp Motor kW Input	Sensible To Total Ratio (S/T) Dry Bulb			Total Cooling Capacity		Comp Motor kW Input	Sensible To Total Ratio (S/T) Dry Bulb			Total Cooling Capacity		Comp Motor kW Input	Sensible To Total Ratio (S/T) Dry Bulb			Total Cooling Capacity		Comp Motor kW Input	Sensible To Total Ratio (S/T) Dry Bulb		
	cfm	L/s	kBtuh	kW		75°F 24°C	80°F 27°C	85°F 29°C	kBtuh	kW		75°F 24°C	80°F 27°C	85°F 29°C	kBtuh	kW		75°F 24°C	80°F 27°C	85°F 29°C	kBtuh	kW		75°F 24°C	80°F 27°C	85°F 29°C
13ACC-037 — C33-48B RFC COOLING CAPACITY																										
63°F (17°C)	1050	495	34.3	10.1	2.18	.71	.87	1.00	33.1	9.7	2.45	.72	.89	1.00	31.8	9.3	2.77	.73	.91	1.00	30.5	8.9	3.13	.76	.93	1.00
	1200	565	35.1	10.3	2.18	.74	.92	1.00	33.9	9.9	2.46	.76	.94	1.00	32.6	9.6	2.78	.77	.96	1.00	31.2	9.1	3.13	.79	.98	1.00
	1350	635	35.8	10.5	2.18	.78	.96	1.00	34.6	10.1	2.47	.80	.98	1.00	33.3	9.8	2.78	.82	.99	1.00	32.0	9.4	3.14	.84	1.00	1.00
67°F (19°C)	1050	495	36.6	10.7	2.19	.55	.69	.83	35.2	10.3	2.47	.56	.70	.85	33.8	9.9	2.79	.56	.71	.87	32.4	9.5	3.14	.57	.72	.90
	1200	565	37.2	10.9	2.20	.57	.72	.88	35.9	10.5	2.48	.58	.73	.90	34.4	10.1	2.79	.59	.75	.93	32.9	9.6	3.15	.59	.77	.95
	1350	635	37.8	11.1	2.20	.59	.75	.93	36.4	10.7	2.48	.60	.77	.95	34.9	10.2	2.80	.60	.79	.97	33.4	9.8	3.16	.62	.81	.99
71°F (22°C)	1050	495	39.0	11.4	2.21	.41	.54	.66	37.6	11.0	2.49	.41	.54	.67	36.2	10.6	2.81	.41	.55	.68	34.6	10.1	3.16	.42	.56	.70
	1200	565	39.7	11.6	2.21	.42	.56	.69	38.3	11.2	2.49	.42	.56	.71	36.8	10.8	2.81	.42	.57	.72	35.2	10.3	3.17	.42	.58	.74
	1350	635	40.3	11.8	2.22	.42	.58	.73	38.8	11.4	2.50	.43	.59	.74	37.2	10.9	2.82	.43	.60	.76	35.6	10.4	3.18	.43	.61	.79
13ACC-037 — C33-38A/B TXV and RFC COOLING CAPACITY																										
63°F (17°C)	1050	495	35.6	10.4	2.18	.72	.88	1.00	34.3	10.1	2.46	.73	.90	1.00	33.0	9.7	2.77	.74	.92	1.00	31.6	9.3	3.13	.76	.94	1.00
	1200	565	36.5	10.7	2.18	.75	.93	1.00	35.1	10.3	2.46	.77	.95	1.00	33.8	9.9	2.78	.79	.97	1.00	32.4	9.5	3.14	.81	.99	1.00
	1350	635	37.2	10.9	2.19	.79	.97	1.00	35.9	10.5	2.47	.80	.99	1.00	34.6	10.1	2.79	.83	1.00	1.00	33.3	9.8	3.14	.85	1.00	1.00
67°F (19°C)	1050	495	37.9	11.1	2.19	.55	.69	.84	36.5	10.7	2.47	.56	.70	.86	35.0	10.3	2.79	.57	.72	.88	33.5	9.8	3.15	.58	.73	.91
	1200	565	38.6	11.3	2.20	.57	.73	.89	37.1	10.9	2.48	.58	.74	.91	35.6	10.4	2.80	.59	.76	.94	34.1	10.0	3.15	.60	.78	.96
	1350	635	39.1	11.5	2.20	.59	.76	.94	37.7	11.0	2.48	.60	.78	.96	36.1	10.6	2.80	.61	.80	.98	34.6	10.1	3.16	.63	.82	1.00
71°F (22°C)	1050	495	40.4	11.8	2.21	.41	.54	.67	38.9	11.4	2.49	.41	.55	.68	37.4	11.0	2.81	.42	.56	.70	35.8	10.5	3.16	.42	.57	.71
	1200	565	41.1	12.0	2.22	.42	.56	.70	39.6	11.6	2.50	.42	.57	.72	38.0	11.1	2.82	.43	.58	.73	36.3	10.6	3.17	.43	.59	.75
	1350	635	41.7	12.2	2.22	.42	.58	.74	40.1	11.8	2.50	.43	.59	.76	38.5	11.3	2.82	.43	.60	.78	36.8	10.8	3.17	.44	.62	.80
13ACC-037 — CR26-30N-F TXV and RFC COOLING CAPACITY																										
63°F (17°C)	1050	495	33.8	9.9	2.17	.72	.88	1.00	32.6	9.6	2.45	.73	.90	1.00	31.4	9.2	2.76	.74	.92	1.00	30.1	8.8	3.12	.76	.94	1.00
	1200	565	34.5	10.1	2.17	.75	.93	1.00	33.3	9.8	2.45	.77	.95	1.00	32.1	9.4	2.77	.79	.96	1.00	30.8	9.0	3.12	.80	.98	1.00
	1350	635	35.2	10.3	2.17	.79	.97	1.00	34.0	10.0	2.45	.80	.98	1.00	32.8	9.6	2.77	.82	.99	1.00	31.6	9.3	3.12	.84	1.00	1.00
67°F (19°C)	1050	495	35.8	10.5	2.18	.56	.70	.84	34.5	10.1	2.46	.56	.71	.86	33.2	9.7	2.77	.57	.72	.88	31.8	9.3	3.13	.58	.73	.91
	1200	565	36.4	10.7	2.18	.57	.73	.89	35.1	10.3	2.46	.58	.74	.91	33.7	9.9	2.78	.59	.76	.93	32.3	9.5	3.13	.60	.78	.96
	1350	635	36.9	10.8	2.18	.59	.76	.94	35.6	10.4	2.47	.60	.78	.95	34.2	10.0	2.78	.61	.80	.97	32.8	9.6	3.14	.62	.82	.99
71°F (22°C)	1050	495	38.2	11.2	2.19	.41	.54	.67	36.8	10.8	2.47	.41	.55	.68	35.4	10.4	2.79	.42	.56	.70	33.9	9.9	3.15	.42	.57	.71
	1200	565	38.7	11.3	2.19	.42	.56	.71	37.4	11.0	2.48	.42	.57	.72	35.9	10.5	2.80	.42	.58	.74	34.4	10.1	3.15	.43	.59	.75
	1350	635	39.2	11.5	2.20	.42	.58	.74	37.8	11.1	2.48	.43	.59	.76	36.3	10.6	2.80	.43	.60	.78	34.8	10.2	3.15	.44	.61	.80
13ACC-037 — CR26-36N/W-F TXV and RFC COOLING CAPACITY																										
63°F (17°C)	1050	495	34.4	10.1	2.17	.72	.88	1.00	33.2	9.7	2.45	.73	.90	1.00	32.0	9.4	2.77	.74	.92	1.00	30.6	9.0	3.12	.76	.94	1.00
	1200	565	35.2	10.3	2.18	.75	.93	1.00	34.0	10.0	2.46	.77	.95	1.00	32.7	9.6	2.77	.79	.97	1.00	31.4	9.2	3.13	.81	.98	1.00
	1350	635	35.9	10.5	2.18	.79	.97	1.00	34.7	10.2	2.46	.80	.99	1.00	33.4	9.8	2.78	.82	1.00	1.00	32.2	9.4	3.13	.85	1.00	1.00
67°F (19°C)	1050	495	36.6	10.7	2.19	.56	.69	.84	35.3	10.3	2.47	.56	.71	.86	33.9	9.9	2.78	.57	.72	.88	32.4	9.5	3.14	.58	.74	.91
	1200	565	37.2	10.9	2.19	.57	.73	.89	35.9	10.5	2.47	.58	.74	.91	34.4	10.1	2.79	.59	.76	.93	33.0	9.7	3.15	.60	.78	.96
	1350	635	37.8	11.1	2.20	.59	.76	.94	36.4	10.7	2.48	.60	.78	.96	34.9	10.2	2.80	.61	.80	.98	33.4	9.8	3.15	.62	.82	.99
71°F (22°C)	1050	495	39.0	11.4	2.20	.41	.54	.67	37.6	11.0	2.49	.41	.55	.68	36.2	10.6	2.80	.41	.56	.70	34.6	10.1	3.16	.42	.57	.71
	1200	565	39.7	11.6	2.21	.42	.56	.70	38.3	11.2	2.49	.42	.57	.72	36.7	10.8	2.81	.42	.58	.73	35.2	10.3	3.16	.43	.59	.75
	1350	635	40.2	11.8	2.21	.43	.58	.74	38.7	11.3	2.49	.43	.59	.75	37.2	10.9	2.81	.43	.60	.78	35.5	10.4	3.17	.44	.62	.80
13ACC-037 — CR26-48N/W-F TXV and RFC COOLING CAPACITY																										
63°F (17°C)	1050	495	34.3	10.1	2.17	.71	.87	1.00	33.1	9.7	2.45	.72	.89	1.00	31.8	9.3	2.76	.73	.91	1.00	30.4	8.9	3.11	.75	.93	1.00
	1200	565	35.1	10.3	2.17	.74	.92	1.00	33.8	9.9	2.45	.76	.94	1.00	32.5	9.5	2.77	.77	.96	1.00	31.1	9.1	3.12	.79	.98	1.00
	1350	635	35.8	10.5	2.18	.77	.96	1.00	34.5	10.1	2.46	.79	.98	1.00	33.2	9.7	2.77	.81	.99	1.00	31.9	9.3	3.13	.83	1.00	1.00
67°F (19°C)	1050	495	36.6	10.7	2.18	.55	.68	.83	35.2	10.3	2.46	.56	.70	.85	33.8	9.9	2.78	.56	.71	.87	32.4	9.5	3.14	.57	.72	.90
	1200	565	37.2	10.9	2.19	.57	.72	.88	35.9	10.5	2.47	.57	.73	.90	34.4	10.1	2.79	.58	.75	.92	32.9	9.6	3.14	.59	.77	.95
	1350	635	37.8	11.1	2.19	.59	.75	.92	36.4	10.7	2.48	.59	.77	.95	34.9	10.2	2.79	.61	.79	.97	33.3	9.8	3.14	.62	.81	.99
71°F (22°C)	1050	495	39.1	11.5	2.20	.41	.53	.66	37.7	11.0	2.48	.41	.54	.67	36.2	10.6	2.80	.41	.55	.68	34.6	10.1	3.16	.42	.56	.70
	1200	565	39.8	11.7	2.21	.42	.55	.69	38.3	11.2	2.49	.42	.56	.70	36.8	10.8	2.81	.42	.57	.72	35.1	10.3	3.16	.42	.58	.74
	1350	635	40.3	11.8	2.21	.42	.57	.72	38.8	11.4	2.49	.42	.58	.74	37.2	10.9	2.81	.43	.59	.76	35.6	10.4	3.16	.43	.61	.78
13ACC-037 — CH33-36A/B/C-2F TXV and RFC COOLING CAPACITY																										
63°F (17°C)	1050	495	34.0	10.0	2.16	.71	.87	.99	32.8	9.6	2.44	.72	.89	1.00	31.6	9.3	2.76	.74	.91	1.00	30.4	8.9	3.12	.75	.93	1.00
	1200	565	34.8	10.2	2.17	.74	.92	1.00	33.6	9.8	2.45	.76	.94	1.00	32.3	9.5	2.77	.78	.96	1.00	31.0	9.1	3.12	.80	.98	1.00
	1350	635	35.4	10.4	2.17	.78	.96	1.00	34.2	10.0	2.45	.80	.98	1.00	33.0	9.7	2.77	.81	.99	1.00	31.8	9.3	3.12	.84	1.00	1.00
67°F (19°C)	1050	495	36.2	10.6	2.17	.55	.69	.84	34.9	10.2	2.46	.56	.70	.85	33.5	9.8	2.77	.57	.71	.87	32.1	9.4	3.13	.57	.73	.89
	1200	565	36.8	10.8	2.18	.57	.72	.88	35.5	10.4	2.46	.58	.73	.90	34.1	10.0	2.78	.59	.75	.92	32.7	9.6	3.13	.60	.77	.94
	1350	635	37.3	10.9	2.18	.59	.75	.93	35.9	10.5	2.47	.60	.77	.94	34.5	10.1	2.78	.61	.79	.96	33.1	9.7	3.13	.62	.81	.98
71°F (22°C)	1050	495	38.6	11.3	2.19	.41	.54	.66	37.2	10.9	2.47	.41	.54	.67	35.8	10.5	2.79	.41	.55	.69	34.3	10.1	3.15	.42	.56	.70
	1200	565	39.2	11.5	2.19	.41	.55	.70	37.8	11.1	2.47	.42	.56	.71	36.3	10.6	2.80	.42	.57	.72	34.8	10.2	3.15	.43	.58	.74
	1350	635	39.7	11.6	2.20	.42	.57	.73	38.3	11.2	2.48	.42	.58	.74	36.8	10.8	2.80	.43	.59	.76	35.2	10.3	3.15	.43	.61	.79
13ACC-037 — CH23-41 TXV and RFC COOLING CAPACITY																										
63°F (17°C)	1050	495	34.7	10.2	2.18	.72	.89	1.00	33.5	9.8	2.45	.74	.91	1.00	32.2	9.4	2.77	.75	.93	1.00	30.9	9.1	3.12	.77	.95	1.00
	1200	565	35.6	10.4	2.18	.76	.93	1.00	34.3	10.1	2.46	.77	.96	1.00	33.0	9.7	2.77	.79	.97	1.00	31.7	9.3	3.13	.81	.99	1.00
	1350	635	36.3	10.6	2.18	.80	.98	1.00	35.1	10.3	2.46	.81	.99	1.00	33.8	9.9	2.78	.83	1.00	1.00	32.6	9.6	3.13	.86	1.00	1.00
67°F (19°C)	1050	495	36.8	10.8	2.19	.56	.70	.85	35.5	10.4	2.47	.56	.71	.87	34.1	10.0	2.79	.57	.72	.89	32.7	9.6	3.14	.58	.74	.91
	1200	565	37.5	11.0	2.19	.58	.73	.90	36.1	10.6	2.47	.59	.75	.92	34.7	10.2	2.79	.60	.76	.94	33.2	9.7	3.15	.61	.79	.96
	1350	635	38.1	11.2	2.20	.60	.77	.95	36.7	10.8	2.48	.61	.79	.96	35.2	10.3	2.80	.62	.81	.98	33.7	9.9	3.15	.63	.83	1.00
71°F (22°C)	1050	495	39.3	11.5	2.20	.41	.54	.67	37.9	11.1	2.49	.41	.55	.69	36.4	10.7	2.80	.42	.56	.70	34.9	10.2	3.16	.42	.57	.72
	1200	565	39.9	11.7	2.21	.42	.57	.71	38.5	11.3	2.49	.42	.57	.73	37.0	10.8	2.81	.43	.58	.74	35.4	10.4	3.16	.43	.60	.76
	1350	635	40.5	11.9	2.21	.43	.59	.75	39.0	11.4	2.49	.43	.60	.76	37.4	11.0	2.81	.43	.61	.78	35.8	10.5	3.17	.44	.62	.81

NOTE - For Temperatures and Capacities not shown in tables, see bulletin - Cooling Unit Rating Table Correction Factor Data in Miscellaneous Engineering Data section.

Entering Wet Bulb Temperature	Total Air Volume		Outdoor Air Temperature Entering Outdoor Coil																							
			85°F (29°C)						95°F (35°C)						105°F (41°C)						115°F (46°C)					
			Total Cooling Capacity		Comp Motor kW Input	Sensible To Total Ratio (S/T) Dry Bulb			Total Cooling Capacity		Comp Motor kW Input	Sensible To Total Ratio (S/T) Dry Bulb			Total Cooling Capacity		Comp Motor kW Input	Sensible To Total Ratio (S/T) Dry Bulb			Total Cooling Capacity		Comp Motor kW Input	Sensible To Total Ratio (S/T) Dry Bulb		
	cfm	L/s	kBtuh	kW		75°F 24°C	80°F 27°C	85°F 29°C	kBtuh	kW		75°F 24°C	80°F 27°C	85°F 29°C	kBtuh	kW		75°F 24°C	80°F 27°C	85°F 29°C	kBtuh	kW		75°F 24°C	80°F 27°C	85°F 29°C
13ACC-037 — CH23-51 TXV and RFC COOLING CAPACITY																										
63°F (17°C)	1050	495	34.8	10.2	2.18	.72	.89	1.00	33.6	9.8	2.46	.73	.90	1.00	32.3	9.5	2.77	.75	.92	1.00	30.9	9.1	3.13	.76	.95	1.00
	1200	565	35.6	10.4	2.18	.76	.94	1.00	34.4	10.1	2.47	.77	.95	1.00	33.1	9.7	2.78	.79	.97	1.00	31.7	9.3	3.14	.81	.99	1.00
	1350	635	36.4	10.7	2.19	.79	.98	1.00	35.1	10.3	2.47	.82	.99	1.00	33.9	9.9	2.79	.83	1.00	1.00	32.6	9.6	3.14	.86	1.00	1.00
67°F (19°C)	1050	495	37.0	10.8	2.19	.56	.70	.85	35.6	10.4	2.47	.56	.71	.87	34.2	10.0	2.79	.57	.72	.89	32.7	9.6	3.15	.58	.74	.91
	1200	565	37.7	11.0	2.20	.58	.73	.90	36.3	10.6	2.48	.59	.74	.92	34.8	10.2	2.80	.59	.77	.94	33.3	9.8	3.15	.61	.79	.96
	1350	635	38.2	11.2	2.20	.60	.77	.95	36.8	10.8	2.49	.61	.79	.97	35.3	10.3	2.80	.62	.81	.98	33.7	9.9	3.16	.63	.83	1.00
71°F (22°C)	1050	495	39.5	11.6	2.21	.41	.54	.67	38.0	11.1	2.49	.41	.55	.69	36.5	10.7	2.81	.42	.56	.70	34.9	10.2	3.17	.42	.57	.71
	1200	565	40.1	11.8	2.22	.42	.56	.71	38.6	11.3	2.50	.42	.57	.72	37.1	10.9	2.82	.43	.58	.74	35.4	10.4	3.18	.43	.60	.76
	1350	635	40.7	11.9	2.22	.43	.59	.74	39.1	11.5	2.50	.43	.60	.76	37.5	11.0	2.82	.44	.61	.78	35.9	10.5	3.18	.44	.62	.81
13ACC-037 — CH33-42B-2F TXV and RFC COOLING CAPACITY																										
63°F (17°C)	1050	495	35.2	10.3	2.18	.71	.87	1.00	33.9	9.9	2.47	.72	.89	1.00	32.6	9.6	2.78	.73	.91	1.00	31.3	9.2	3.14	.75	.93	1.00
	1200	565	35.9	10.5	2.19	.74	.92	1.00	34.7	10.2	2.47	.75	.94	1.00	33.4	9.8	2.79	.78	.96	1.00	32.0	9.4	3.15	.80	.98	1.00
	1350	635	36.7	10.8	2.19	.78	.96	1.00	35.4	10.4	2.48	.79	.98	1.00	34.1	10.0	2.79	.81	.99	1.00	32.8	9.6	3.15	.84	1.00	1.00
67°F (19°C)	1050	495	37.4	11.0	2.20	.55	.69	.84	36.1	10.6	2.48	.56	.70	.85	34.7	10.2	2.80	.56	.71	.87	33.2	9.7	3.15	.57	.72	.90
	1200	565	38.1	11.2	2.20	.57	.72	.88	36.7	10.8	2.48	.58	.73	.90	35.3	10.3	2.80	.59	.75	.92	33.7	9.9	3.16	.59	.77	.95
	1350	635	38.7	11.3	2.21	.59	.75	.93	37.2	10.9	2.49	.60	.77	.95	35.7	10.5	2.81	.61	.79	.97	34.2	10.0	3.17	.62	.81	.99
71°F (22°C)	1050	495	40.0	11.7	2.21	.41	.53	.66	38.5	11.3	2.50	.41	.54	.67	37.0	10.8	2.82	.41	.55	.69	35.5	10.4	3.17	.42	.56	.70
	1200	565	40.7	11.9	2.22	.42	.55	.69	39.2	11.5	2.50	.42	.56	.71	37.6	11.0	2.82	.42	.57	.72	36.0	10.6	3.18	.42	.58	.74
	1350	635	41.2	12.1	2.22	.42	.57	.73	39.7	11.6	2.51	.43	.58	.74	38.1	11.2	2.82	.43	.60	.77	36.4	10.7	3.19	.44	.61	.79
13ACC-037 — CH33-44/48B-2F TXV and RFC COOLING CAPACITY																										
63°F (17°C)	1050	495	35.5	10.4	2.19	.71	.87	1.00	34.2	10.0	2.47	.72	.89	1.00	32.9	9.6	2.79	.73	.91	1.00	31.5	9.2	3.14	.75	.93	1.00
	1200	565	36.3	10.6	2.19	.74	.92	1.00	35.0	10.3	2.48	.76	.94	1.00	33.6	9.8	2.79	.77	.96	1.00	32.3	9.5	3.15	.80	.98	1.00
	1350	635	37.1	10.9	2.20	.78	.96	1.00	35.7	10.5	2.48	.80	.98	1.00	34.4	10.1	2.80	.81	1.00	1.00	33.1	9.7	3.15	.84	1.00	1.00
67°F (19°C)	1050	495	37.8	11.1	2.20	.55	.69	.83	36.5	10.7	2.48	.56	.69	.85	35.0	10.3	2.80	.56	.71	.87	33.5	9.8	3.16	.57	.73	.90
	1200	565	38.6	11.3	2.21	.57	.72	.88	37.1	10.9	2.49	.58	.73	.90	35.6	10.4	2.81	.58	.75	.93	34.1	10.0	3.17	.60	.77	.95
	1350	635	39.1	11.5	2.21	.59	.75	.93	37.7	11.0	2.50	.59	.77	.95	36.1	10.6	2.81	.61	.79	.97	34.5	10.1	3.17	.62	.81	.99
71°F (22°C)	1050	495	40.5	11.9	2.22	.41	.53	.66	39.0	11.4	2.50	.41	.54	.67	37.4	11.0	2.82	.41	.55	.69	35.8	10.5	3.18	.42	.56	.70
	1200	565	41.2	12.1	2.23	.42	.55	.69	39.7	11.6	2.51	.42	.56	.71	38.0	11.1	2.83	.42	.57	.72	36.4	10.7	3.19	.43	.58	.74
	1350	635	41.8	12.3	2.23	.42	.58	.73	40.2	11.8	2.52	.43	.58	.74	38.5	11.3	2.83	.43	.59	.76	36.8	10.8	3.19	.44	.61	.79
13ACC-037 — C33-36A/B TXV with G60UHV-36A/B COOLING CAPACITY																										
63°F (17°C)	1070	505	34.3	10.1	2.17	.73	.89	1.00	33.1	9.7	2.45	.74	.91	1.00	31.8	9.3	2.77	.75	.93	1.00	30.6	9.0	3.12	.77	.95	1.00
	1220	575	35.0	10.3	2.17	.76	.94	1.00	33.8	9.9	2.45	.78	.96	1.00	32.6	9.6	2.77	.79	.97	1.00	31.3	9.2	3.12	.82	.99	1.00
	1370	645	35.7	10.5	2.18	.80	.98	1.00	34.5	10.1	2.46	.81	.99	1.00	33.3	9.8	2.77	.84	1.00	1.00	32.0	9.4	3.13	.86	1.00	1.00
67°F (19°C)	1070	505	36.3	10.6	2.18	.56	.70	.86	35.0	10.3	2.46	.57	.72	.88	33.6	9.8	2.78	.58	.73	.90	32.2	9.4	3.13	.58	.75	.92
	1220	575	36.8	10.8	2.18	.58	.74	.90	35.5	10.4	2.47	.59	.75	.92	34.1	10.0	2.78	.60	.77	.95	32.7	9.6	3.14	.61	.79	.97
	1370	645	37.3	10.9	2.19	.60	.77	.95	36.0	10.6	2.47	.61	.79	.97	34.6	10.1	2.78	.62	.81	.98	33.1	9.7	3.14	.63	.84	1.00
71°F (22°C)	1070	505	38.6	11.3	2.19	.41	.55	.68	37.3	10.9	2.48	.42	.55	.69	35.8	10.5	2.80	.42	.56	.71	34.3	10.1	3.15	.42	.57	.72
	1220	575	39.2	11.5	2.20	.42	.57	.71	37.8	11.1	2.48	.42	.58	.73	36.3	10.6	2.80	.43	.59	.74	34.8	10.2	3.15	.43	.60	.76
	1370	645	39.7	11.6	2.20	.43	.59	.75	38.2	11.2	2.48	.43	.60	.77	36.7	10.8	2.80	.43	.61	.79	35.2	10.3	3.16	.44	.62	.81
13ACC-037 — C33-42B TXV with G60UHV-36B-090 COOLING CAPACITY																										
63°F (17°C)	1070	505	34.3	10.1	2.17	.73	.89	1.00	33.1	9.7	2.45	.74	.91	1.00	31.8	9.3	2.77	.75	.93	1.00	30.6	9.0	3.12	.77	.95	1.00
	1220	575	35.0	10.3	2.17	.76	.94	1.00	33.8	9.9	2.45	.78	.96	1.00	32.6	9.6	2.77	.79	.97	1.00	31.3	9.2	3.12	.82	.99	1.00
	1370	645	35.7	10.5	2.18	.80	.98	1.00	34.5	10.1	2.46	.81	.99	1.00	33.3	9.8	2.77	.84	1.00	1.00	32.0	9.4	3.13	.86	1.00	1.00
67°F (19°C)	1070	505	36.3	10.6	2.18	.56	.70	.86	35.0	10.3	2.46	.57	.72	.88	33.6	9.8	2.78	.58	.73	.90	32.2	9.4	3.13	.58	.75	.92
	1220	575	36.8	10.8	2.18	.58	.74	.90	35.5	10.4	2.47	.59	.75	.92	34.1	10.0	2.78	.60	.77	.95	32.7	9.6	3.14	.61	.79	.97
	1370	645	37.3	10.9	2.19	.60	.77	.95	36.0	10.6	2.47	.61	.79	.97	34.6	10.1	2.78	.62	.81	.98	33.1	9.7	3.14	.63	.84	1.00
71°F (22°C)	1070	505	38.6	11.3	2.19	.41	.55	.68	37.3	10.9	2.48	.42	.55	.69	35.8	10.5	2.80	.42	.56	.71	34.3	10.1	3.15	.42	.57	.72
	1220	575	39.2	11.5	2.20	.42	.57	.71	37.8	11.1	2.48	.42	.58	.73	36.3	10.6	2.80	.43	.59	.74	34.8	10.2	3.15	.43	.60	.76
	1370	645	39.7	11.6	2.20	.43	.59	.75	38.2	11.2	2.48	.43	.60	.77	36.7	10.8	2.80	.43	.61	.79	35.2	10.3	3.16	.44	.62	.81
13ACC-037 — C33-48B TXV with G60UHV-36B-090 COOLING CAPACITY																										
63°F (17°C)	1070	505	35.4	10.4	2.18	.72	.88	1.00	34.1	10.0	2.46	.73	.90	1.00	32.8	9.6	2.77	.74	.92	1.00	31.5	9.2	3.13	.76	.94	1.00
	1220	575	36.2	10.6	2.18	.74	.92	1.00	34.9	10.2	2.46	.76	.94	1.00	33.6	9.8	2.78	.78	.96	1.00	32.2	9.4	3.13	.80	.98	1.00
	1370	645	36.9	10.8	2.19	.78	.96	1.00	35.6	10.4	2.47	.80	.98	1.00	34.3	10.1	2.78	.82	1.00	1.00	33.0	9.7	3.14	.84	1.00	1.00
67°F (19°C)	1070	505	37.7	11.0	2.19	.55	.69	.84	36.3	10.6	2.47	.56	.70	.86	34.9	10.2	2.79	.57	.71	.88	33.4	9.8	3.14	.58	.73	.90
	1220	575	38.4	11.3	2.19	.57	.72	.89	36.9	10.8	2.48	.58	.74	.91	35.5	10.4	2.79	.59	.75	.93	33.9	9.9	3.15	.60	.77	.95
	1370	645	38.9	11.4	2.20	.59	.76	.93	37.5	11.0	2.48	.60	.77	.95	35.9	10.5	2.80	.61	.80	.97	34.4	10.1	3.16	.62	.82	.99
71°F (22°C)	1070	505	40.2	11.8	2.21	.41	.54	.67	38.8	11.4	2.49	.41	.54	.68	37.3	10.9	2.81	.42	.55	.69	35.7	10.5	3.16	.42	.56	.71
	1220	575	40.9	12.0	2.21	.42	.56	.70	39.4	11.5	2.49	.42	.57	.71	37.9	11.1	2.81	.42	.57	.73	36.2	10.6	3.17	.43	.59	.75
	1370	645	41.5	12.2	2.22	.42	.58	.73	39.9	11.7	2.50	.43	.59	.75	38.3	11.2	2.82	.43	.60	.77	36.6	10.7	3.18	.44	.61	.79
13ACC-037 — C33-38A/B TXV with G60UHV-36A/B COOLING CAPACITY																										
63°F (17°C)	1070	505	35.6	10.4	2.18	.72	.89	1.00	34.4	10.1	2.46	.73	.90	1.00	33.0	9.7	2.77	.75	.93	1.00	31.6	9.3	3.13	.77	.95	1.00
	1220	575	36.5	10.7	2.18	.75	.93	1.00	35.1	10.3	2.46	.77	.95	1.00	33.8	9.9	2.78	.79	.97	1.00	32.4	9.5	3.14	.81	.99	1.00
	1370	645	37.2	10.9	2.19	.79	.98	1.00	35.9	10.5	2.47	.81	.99	1.00	34.6	10.1	2.79	.83	1.00	1.00	33.3	9.8	3.14	.85	1.00	1.00
67°F (19°C)	1070	505	37.9	11.1	2.19	.56	.70	.85	36.5	10.7	2.47	.56	.71	.87	35.0	10.3	2.79	.57	.72	.89	33.5	9.8	3.15	.58	.74	.91
	1220	575	38.5	11.3	2.20	.58	.73	.90	37.1	10.9	2.48	.58	.75	.92	35.6	10.4	2.80	.59	.76	.94	34.1	10.0	3.15	.61	.78	.96
	1370	645	39.1	11.5	2.20	.60	.77	.94	37.6	11.0	2.49	.61	.79	.96	36.1	10.6	2.80	.62	.81	.98	34.5	10.1	3.16	.63	.83	1.00
71°F (22°C)	1070	505	40.4	11.8	2.21	.41	.54	.67	38.9	11.4	2.49	.41	.55	.68	37.4	11.0	2.81	.42	.56	.70	35.8	10.5	3.17	.42	.57	.72
	1220	575	41.1	12.0	2.22	.42	.56	.71	39.6	11.6	2.50	.42	.57	.72	38.0	11.1	2.82	.43	.58	.74	36.3	10.6	3.17	.43	.59	.76
	1370	645	41.6	12.2	2.22	.43	.58	.74	40.1	11.8	2.50	.43	.59	.76	38.4	11.3	2.82	.44	.61	.78	36.7	10.8	3.18	.44	.62	.80

NOTE - For Temperatures and Capacities not shown in tables, see bulletin - Cooling Unit Rating Table Correction Factor Data in Miscellaneous Engineering Data section.

Entering Wet Bulb Temperature	Total Air Volume		Outdoor Air Temperature Entering Outdoor Coil																							
			85°F (29°C)						95°F (35°C)						105°F (41°C)						115°F (46°C)					
			Total Cooling Capacity		Comp Motor kW Input	Sensible To Total Ratio (S/T) Dry Bulb			Total Cooling Capacity		Comp Motor kW Input	Sensible To Total Ratio (S/T) Dry Bulb			Total Cooling Capacity		Comp Motor kW Input	Sensible To Total Ratio (S/T) Dry Bulb			Total Cooling Capacity		Comp Motor kW Input	Sensible To Total Ratio (S/T) Dry Bulb		
	cfm	L/s	kBtuh	kW		75°F 24°C	80°F 27°C	85°F 29°C	kBtuh	kW		75°F 24°C	80°F 27°C	85°F 29°C	kBtuh	kW		75°F 24°C	80°F 27°C	85°F 29°C	kBtuh	kW		75°F 24°C	80°F 27°C	85°F 29°C
13ACC-037 — CR26-30N-F TXV with G60DFV-36A-070 COOLING CAPACITY																										
63°F (17°C)	1070	505	33.8	9.9	2.17	.72	.89	1.00	32.6	9.6	2.45	.74	.91	1.00	31.4	9.2	2.76	.75	.93	1.00	30.1	8.8	3.12	.77	.95	1.00
	1220	575	34.5	10.1	2.17	.76	.93	1.00	33.3	9.8	2.45	.77	.95	1.00	32.1	9.4	2.77	.79	.97	1.00	30.8	9.0	3.12	.81	.99	1.00
	1370	645	35.1	10.3	2.18	.79	.97	1.00	34.0	10.0	2.45	.81	.98	1.00	32.8	9.6	2.77	.83	1.00	1.00	31.6	9.3	3.13	.85	1.00	1.00
67°F (19°C)	1070	505	35.8	10.5	2.18	.56	.70	.85	34.5	10.1	2.46	.56	.71	.87	33.2	9.7	2.78	.57	.72	.89	31.8	9.3	3.13	.58	.74	.91
	1220	575	36.4	10.7	2.18	.58	.73	.90	35.1	10.3	2.46	.59	.74	.92	33.7	9.9	2.78	.59	.76	.94	32.3	9.5	3.13	.60	.78	.96
	1370	645	36.8	10.8	2.18	.60	.77	.94	35.5	10.4	2.47	.60	.79	.96	34.1	10.0	2.78	.62	.80	.98	32.7	9.6	3.14	.63	.83	.99
71°F (22°C)	1070	505	38.1	11.2	2.19	.41	.54	.68	36.8	10.8	2.47	.41	.55	.69	35.4	10.4	2.79	.42	.56	.70	33.9	9.9	3.15	.42	.57	.72
	1220	575	38.7	11.3	2.19	.42	.56	.71	37.3	10.9	2.48	.42	.57	.72	35.9	10.5	2.80	.42	.58	.74	34.4	10.1	3.15	.43	.59	.76
	1370	645	39.2	11.5	2.20	.43	.58	.74	37.8	11.1	2.48	.43	.59	.76	36.3	10.6	2.80	.43	.60	.78	34.7	10.2	3.15	.44	.62	.80
13ACC-037 — CR26-36N-F TXV with G60DFV-36A-070 COOLING CAPACITY																										
63°F (17°C)	1070	505	34.5	10.1	2.18	.72	.89	1.00	33.2	9.7	2.45	.73	.91	1.00	32.0	9.4	2.77	.75	.93	1.00	30.7	9.0	3.12	.77	.95	1.00
	1220	575	35.2	10.3	2.18	.76	.94	1.00	34.0	10.0	2.46	.77	.95	1.00	32.7	9.6	2.77	.79	.97	1.00	31.4	9.2	3.13	.81	.99	1.00
	1370	645	35.9	10.5	2.18	.79	.98	1.00	34.7	10.2	2.46	.81	.99	1.00	33.5	9.8	2.78	.83	1.00	1.00	32.2	9.4	3.13	.85	1.00	1.00
67°F (19°C)	1070	505	36.6	10.7	2.19	.56	.70	.85	35.3	10.3	2.47	.57	.71	.87	33.9	9.9	2.79	.57	.72	.89	32.4	9.5	3.14	.58	.74	.91
	1220	575	37.2	10.9	2.19	.58	.73	.90	35.9	10.5	2.47	.59	.74	.92	34.4	10.1	2.79	.59	.77	.94	33.0	9.7	3.15	.60	.78	.96
	1370	645	37.7	11.0	2.20	.60	.77	.95	36.4	10.7	2.48	.60	.78	.96	34.9	10.2	2.80	.62	.81	.98	33.4	9.8	3.15	.63	.83	1.00
71°F (22°C)	1070	505	39.1	11.5	2.20	.41	.54	.67	37.6	11.0	2.49	.41	.55	.69	36.2	10.6	2.80	.42	.56	.70	34.6	10.1	3.16	.42	.57	.71
	1220	575	39.7	11.6	2.21	.42	.56	.71	38.2	11.2	2.49	.42	.57	.72	36.7	10.8	2.81	.42	.58	.74	35.1	10.3	3.16	.43	.60	.76
	1370	645	40.2	11.8	2.21	.43	.58	.74	38.7	11.3	2.49	.43	.59	.76	37.1	10.9	2.81	.44	.61	.78	35.5	10.4	3.17	.44	.62	.81
13ACC-037 — CR26-36W-F TXV with G60DFV-36B-090 COOLING CAPACITY																										
63°F (17°C)	1070	505	34.6	10.1	2.18	.72	.89	1.00	33.3	9.8	2.45	.73	.91	1.00	32.1	9.4	2.77	.75	.93	1.00	30.8	9.0	3.12	.77	.95	1.00
	1220	575	35.4	10.4	2.18	.75	.93	1.00	34.1	10.0	2.46	.77	.95	1.00	32.8	9.6	2.77	.79	.97	1.00	31.5	9.2	3.13	.81	.99	1.00
	1370	645	36.1	10.6	2.18	.79	.97	1.00	34.8	10.2	2.46	.81	.99	1.00	33.6	9.8	2.78	.83	1.00	1.00	32.3	9.5	3.13	.85	1.00	1.00
67°F (19°C)	1070	505	36.7	10.8	2.19	.56	.70	.85	35.4	10.4	2.47	.56	.71	.87	34.0	10.0	2.79	.57	.72	.89	32.5	9.5	3.14	.58	.74	.91
	1220	575	37.3	10.9	2.19	.58	.73	.90	36.0	10.6	2.47	.58	.74	.92	34.5	10.1	2.79	.59	.77	.94	33.1	9.7	3.15	.60	.78	.96
	1370	645	37.9	11.1	2.20	.60	.77	.94	36.5	10.7	2.48	.61	.78	.96	35.0	10.3	2.80	.62	.81	.98	33.5	9.8	3.15	.63	.83	1.00
71°F (22°C)	1070	505	39.2	11.5	2.20	.41	.54	.67	37.8	11.1	2.49	.41	.55	.69	36.3	10.6	2.80	.42	.56	.70	34.7	10.2	3.16	.42	.57	.72
	1220	575	39.8	11.7	2.21	.42	.56	.71	38.3	11.2	2.49	.42	.57	.72	36.8	10.8	2.81	.43	.58	.74	35.2	10.3	3.16	.43	.59	.76
	1370	645	40.3	11.8	2.21	.43	.58	.74	38.8	11.4	2.49	.43	.59	.76	37.2	10.9	2.81	.43	.61	.78	35.6	10.4	3.17	.44	.62	.81
13ACC-037 — CR26-48N-F TXV with G60DFV-36B-090 COOLING CAPACITY																										
63°F (17°C)	1070	505	34.4	10.1	2.17	.71	.88	1.00	33.2	9.7	2.45	.73	.90	1.00	31.9	9.3	2.76	.74	.92	1.00	30.5	8.9	3.12	.76	.94	1.00
	1220	575	35.2	10.3	2.17	.75	.92	1.00	33.9	9.9	2.46	.76	.94	1.00	32.6	9.6	2.77	.78	.96	1.00	31.3	9.2	3.12	.80	.98	1.00
	1370	645	35.9	10.5	2.18	.78	.96	1.00	34.6	10.1	2.46	.80	.98	1.00	33.3	9.8	2.77	.82	1.00	1.00	32.1	9.4	3.13	.84	1.00	1.00
67°F (19°C)	1070	505	36.7	10.8	2.18	.55	.69	.84	35.3	10.3	2.46	.56	.70	.86	33.9	9.9	2.78	.57	.71	.88	32.5	9.5	3.14	.58	.73	.90
	1220	575	37.4	11.0	2.19	.57	.72	.89	36.0	10.6	2.47	.58	.73	.91	34.5	10.1	2.79	.59	.75	.93	33.0	9.7	3.14	.60	.77	.95
	1370	645	37.9	11.1	2.20	.59	.75	.93	36.5	10.7	2.48	.60	.77	.95	35.0	10.3	2.79	.61	.79	.97	33.4	9.8	3.14	.62	.82	.99
71°F (22°C)	1070	505	39.2	11.5	2.21	.41	.54	.66	37.8	11.1	2.48	.41	.54	.68	36.3	10.6	2.80	.41	.55	.69	34.7	10.2	3.16	.42	.56	.71
	1220	575	39.9	11.7	2.21	.41	.55	.70	38.4	11.3	2.49	.42	.56	.71	36.8	10.8	2.81	.42	.58	.72	35.2	10.3	3.16	.43	.59	.74
	1370	645	40.4	11.8	2.21	.42	.58	.73	38.9	11.4	2.50	.42	.58	.74	37.3	10.9	2.81	.43	.60	.77	35.7	10.5	3.16	.43	.61	.79
13ACC-037 — CH33-36A/B-2F TXV with G60UHV-36A/B COOLING CAPACITY																										
63°F (17°C)	1070	505	33.9	9.9	2.16	.72	.88	1.00	32.7	9.6	2.45	.73	.90	1.00	31.5	9.2	2.76	.74	.92	1.00	30.2	8.9	3.12	.76	.94	1.00
	1220	575	34.6	10.1	2.17	.75	.92	1.00	33.5	9.8	2.45	.76	.94	1.00	32.2	9.4	2.77	.78	.96	1.00	30.9	9.1	3.12	.80	.98	1.00
	1370	645	35.3	10.3	2.17	.78	.96	1.00	34.1	10.0	2.45	.80	.97	1.00	32.9	9.6	2.77	.82	.99	1.00	31.6	9.3	3.12	.84	1.00	1.00
67°F (19°C)	1070	505	36.0	10.6	2.17	.55	.69	.84	34.7	10.2	2.46	.56	.70	.86	33.4	9.8	2.77	.57	.72	.88	32.0	9.4	3.13	.58	.73	.90
	1220	575	36.6	10.7	2.18	.57	.72	.89	35.3	10.3	2.46	.58	.74	.91	33.9	9.9	2.78	.59	.75	.93	32.5	9.5	3.13	.60	.77	.95
	1370	645	37.1	10.9	2.18	.59	.76	.93	35.8	10.5	2.47	.60	.77	.95	34.4	10.1	2.78	.61	.79	.97	32.9	9.6	3.13	.62	.82	.99
71°F (22°C)	1070	505	38.4	11.3	2.19	.41	.54	.67	37.1	10.9	2.47	.41	.55	.68	35.6	10.4	2.79	.42	.56	.69	34.2	10.0	3.15	.42	.56	.71
	1220	575	39.0	11.4	2.19	.42	.56	.70	37.6	11.0	2.48	.42	.57	.72	36.1	10.6	2.80	.42	.58	.73	34.6	10.1	3.15	.43	.59	.75
	1370	645	39.5	11.6	2.20	.42	.58	.73	38.0	11.1	2.48	.43	.59	.75	36.6	10.7	2.80	.43	.60	.77	35.0	10.3	3.15	.44	.61	.79
13ACC-037 — CH23-41 TXV with G60UHV-36A/B COOLING CAPACITY																										
63°F (17°C)	1070	505	34.8	10.2	2.18	.73	.89	1.00	33.5	9.8	2.46	.74	.91	1.00	32.3	9.5	2.77	.75	.93	1.00	30.9	9.1	3.12	.77	.96	1.00
	1220	575	35.6	10.4	2.18	.76	.94	1.00	34.3	10.1	2.46	.78	.96	1.00	33.0	9.7	2.77	.79	.98	1.00	31.7	9.3	3.13	.82	1.00	1.00
	1370	645	36.3	10.6	2.18	.80	.98	1.00	35.1	10.3	2.47	.82	.99	1.00	33.8	9.9	2.78	.84	1.00	1.00	32.6	9.6	3.14	.86	1.00	1.00
67°F (19°C)	1070	505	36.8	10.8	2.19	.56	.70	.86	35.5	10.4	2.47	.57	.71	.87	34.1	10.0	2.79	.58	.73	.90	32.7	9.6	3.14	.59	.74	.92
	1220	575	37.5	11.0	2.19	.58	.74	.91	36.1	10.6	2.47	.59	.75	.93	34.7	10.2	2.79	.60	.77	.95	33.2	9.7	3.15	.61	.79	.97
	1370	645	38.0	11.1	2.20	.60	.78	.95	36.6	10.7	2.48	.61	.79	.97	35.1	10.3	2.80	.62	.81	.99	33.6	9.8	3.15	.64	.84	1.00
71°F (22°C)	1070	505	39.3	11.5	2.21	.41	.55	.68	37.9	11.1	2.49	.41	.55	.69	36.4	10.7	2.80	.42	.56	.71	34.8	10.2	3.16	.42	.57	.72
	1220	575	39.9	11.7	2.21	.42	.57	.72	38.4	11.3	2.49	.42	.58	.73	36.9	10.8	2.81	.43	.59	.74	35.3	10.3	3.16	.43	.60	.77
	1370	645	40.4	11.8	2.21	.43	.59	.75	38.9	11.4	2.49	.43	.60	.77	37.3	10.9	2.81	.44	.61	.79	35.7	10.5	3.17	.44	.63	.81
13ACC-037 — CH23-51 TXV with G60UHV-36A/B COOLING CAPACITY																										
63°F (17°C)	1070	505	34.9	10.2	2.18	.72	.89	1.00	33.7	9.9	2.46	.74	.91	1.00	32.4	9.5	2.77	.75	.93	1.00	31.0	9.1	3.13	.77	.96	1.00
	1220	575	35.7	10.5	2.19	.76	.94	1.00	34.5	10.1	2.47	.78	.96	1.00	33.2	9.7	2.78	.79	.98	1.00	31.8	9.3	3.14	.82	1.00	1.00
	1370	645	36.5	10.7	2.19	.80	.98	1.00	35.3	10.3	2.47	.82	.99	1.00	34.0	10.0	2.79	.84	1.00	1.00	32.7	9.6	3.14	.86	1.00	1.00
67°F (19°C)	1070	505	37.1	10.9	2.19	.56	.70	.85	35.7	10.5	2.47	.57	.71	.87	34.3	10.1	2.79	.57	.73	.89	32.8	9.6	3.15	.59	.74	.92
	1220	575	37.7	11.0	2.20	.58	.74	.91	36.3	10.6	2.48	.59	.75	.93	34.9	10.2	2.80	.60	.77	.95	33.3	9.8	3.16	.61	.79	.97
	1370	645	38.3	11.2	2.20	.60	.77	.95	36.8	10.8	2.49	.61	.79	.97	35.3	10.3	2.80	.62	.82	.99	33.8	9.9	3.16	.64	.84	1.00
71°F (22°C)	1070	505	39.6	11.6	2.21	.41	.54	.68	38.1	11.2	2.49	.41	.55	.69	36.6	10.7	2.81	.42	.56	.71	35.0	10.3	3.17	.42	.57	.72
	1220	575	40.2	11.8	2.22	.42	.57	.71	38.7	11.3	2.50	.42	.58	.73	37.1	10.9	2.82	.43	.59	.74	35.5	10.4	3.18	.43	.60	.77
	1370	645	40.7	11.9	2.22	.43	.59	.75	39.2	11.5	2.50	.43	.60	.77	37.6	11.0	2.82	.43	.61	.79	35.9	10.5	3.18	.44	.62	.81

NOTE - For Temperatures and Capacities not shown in tables, see bulletin - Cooling Unit Rating Table Correction Factor Data in Miscellaneous Engineering Data section.

Entering Wet Bulb Temperature	Total Air Volume		Outdoor Air Temperature Entering Outdoor Coil																							
			85°F (29°C)						95°F (35°C)						105°F (41°C)						115°F (46°C)					
			Total Cooling Capacity		Comp Motor kW Input	Sensible To Total Ratio (S/T) Dry Bulb			Total Cooling Capacity		Comp Motor kW Input	Sensible To Total Ratio (S/T) Dry Bulb			Total Cooling Capacity		Comp Motor kW Input	Sensible To Total Ratio (S/T) Dry Bulb			Total Cooling Capacity		Comp Motor kW Input	Sensible To Total Ratio (S/T) Dry Bulb		
	cfm	L/s	kBtuh	kW		75°F 24°C	80°F 27°C	85°F 29°C	kBtuh	kW		75°F 24°C	80°F 27°C	85°F 29°C	kBtuh	kW		75°F 24°C	80°F 27°C	85°F 29°C	kBtuh	kW		75°F 24°C	80°F 27°C	85°F 29°C
13ACC-037 — CH33-42B-2F TXV with G60UHV-36B-090 COOLING CAPACITY																										
63°F (17°C)	1070	505	35.2	10.3	2.18	.71	.88	1.00	33.9	9.9	2.46	.73	.90	1.00	32.6	9.6	2.78	.74	.92	1.00	31.3	9.2	3.14	.76	.94	1.00
	1220	575	35.9	10.5	2.19	.74	.93	1.00	34.7	10.2	2.47	.76	.94	1.00	33.4	9.8	2.78	.78	.96	1.00	32.0	9.4	3.14	.80	.98	1.00
	1370	645	36.7	10.8	2.19	.78	.96	1.00	35.4	10.4	2.47	.80	.98	1.00	34.1	10.0	2.79	.82	.99	1.00	32.8	9.6	3.15	.84	1.00	1.00
67°F (19°C)	1070	505	37.4	11.0	2.20	.55	.69	.84	36.1	10.6	2.48	.56	.70	.86	34.6	10.1	2.79	.57	.72	.88	33.2	9.7	3.15	.58	.73	.90
	1220	575	38.1	11.2	2.20	.57	.72	.89	36.7	10.8	2.48	.58	.74	.91	35.2	10.3	2.80	.59	.75	.93	33.7	9.9	3.16	.60	.77	.95
	1370	645	38.6	11.3	2.20	.59	.76	.93	37.2	10.9	2.49	.60	.77	.95	35.7	10.5	2.81	.61	.79	.97	34.1	10.0	3.16	.62	.82	.99
71°F (22°C)	1070	505	40.0	11.7	2.21	.41	.54	.67	38.5	11.3	2.50	.41	.55	.68	37.0	10.8	2.81	.41	.55	.69	35.5	10.4	3.17	.42	.56	.71
	1220	575	40.6	11.9	2.22	.42	.56	.70	39.1	11.5	2.50	.42	.57	.71	37.6	11.0	2.82	.42	.58	.73	36.0	10.6	3.18	.43	.59	.75
	1370	645	41.2	12.1	2.22	.42	.58	.73	39.6	11.6	2.50	.43	.59	.75	38.0	11.1	2.83	.43	.60	.77	36.4	10.7	3.18	.44	.61	.79
13ACC-037 — CH33-44/48B-2F TXV with G60UHV-36B-090 COOLING CAPACITY																										
63°F (17°C)	1070	505	35.5	10.4	2.19	.71	.88	1.00	34.2	10.0	2.47	.72	.90	1.00	32.9	9.6	2.79	.74	.92	1.00	31.5	9.2	3.15	.76	.94	1.00
	1220	575	36.3	10.6	2.19	.75	.93	1.00	35.0	10.3	2.48	.76	.94	1.00	33.6	9.8	2.79	.78	.97	1.00	32.3	9.5	3.15	.80	.98	1.00
	1370	645	37.0	10.8	2.20	.78	.97	1.00	35.7	10.5	2.48	.80	.99	1.00	34.4	10.1	2.80	.82	1.00	1.00	33.1	9.7	3.15	.84	1.00	1.00
67°F (19°C)	1070	505	37.8	11.1	2.20	.55	.69	.84	36.5	10.7	2.49	.56	.70	.86	35.0	10.3	2.80	.57	.71	.88	33.4	9.8	3.16	.58	.73	.90
	1220	575	38.5	11.3	2.21	.57	.72	.89	37.1	10.9	2.49	.58	.73	.91	35.6	10.4	2.81	.59	.75	.93	34.0	10.0	3.17	.60	.77	.96
	1370	645	39.1	11.5	2.22	.59	.76	.94	37.6	11.0	2.50	.60	.77	.95	36.1	10.6	2.81	.61	.79	.98	34.5	10.1	3.17	.62	.82	.99
71°F (22°C)	1070	505	40.5	11.9	2.22	.41	.54	.66	39.0	11.4	2.50	.41	.54	.68	37.4	11.0	2.83	.41	.55	.69	35.8	10.5	3.18	.42	.56	.71
	1220	575	41.2	12.1	2.23	.42	.56	.70	39.6	11.6	2.51	.42	.57	.71	38.0	11.1	2.83	.42	.58	.73	36.3	10.6	3.19	.43	.59	.75
	1370	645	41.7	12.2	2.23	.42	.58	.73	40.1	11.8	2.52	.43	.59	.75	38.5	11.3	2.83	.43	.60	.77	36.8	10.8	3.19	.44	.61	.79
13ACC-037 — CB28UH-030 - CB29M-31 TXV COOLING CAPACITY																										
63°F (17°C)	1050	495	32.2	9.4	2.16	.72	.88	1.00	31.1	9.1	2.44	.73	.90	1.00	30.0	8.8	2.75	.75	.92	1.00	28.8	8.4	3.11	.76	.94	1.00
	1200	565	32.8	9.6	2.16	.75	.93	1.00	31.8	9.3	2.44	.77	.94	1.00	30.6	9.0	2.76	.79	.96	1.00	29.4	8.6	3.11	.81	.98	1.00
	1350	635	33.5	9.8	2.16	.79	.96	1.00	32.4	9.5	2.45	.81	.98	1.00	31.2	9.1	2.76	.83	.99	1.00	30.1	8.8	3.12	.84	1.00	1.00
67°F (19°C)	1050	495	34.0	10.0	2.16	.56	.70	.85	32.9	9.6	2.45	.56	.71	.87	31.6	9.3	2.76	.57	.72	.89	30.3	8.9	3.11	.58	.74	.91
	1200	565	34.6	10.1	2.17	.58	.73	.90	33.4	9.8	2.45	.58	.74	.92	32.1	9.4	2.76	.59	.76	.94	30.8	9.0	3.12	.60	.78	.95
	1350	635	35.0	10.3	2.17	.59	.77	.94	33.8	9.9	2.45	.60	.78	.96	32.5	9.5	2.77	.61	.80	.97	31.2	9.1	3.13	.63	.82	.98
71°F (22°C)	1050	495	36.2	10.6	2.18	.41	.54	.67	35.0	10.3	2.46	.41	.55	.69	33.7	9.9	2.77	.42	.56	.70	32.3	9.5	3.13	.42	.57	.72
	1200	565	36.8	10.8	2.18	.42	.56	.71	35.5	10.4	2.46	.42	.57	.72	34.2	10.0	2.78	.43	.58	.74	32.8	9.6	3.13	.43	.59	.76
	1350	635	37.2	10.9	2.19	.43	.58	.74	35.9	10.5	2.47	.43	.59	.76	34.5	10.1	2.78	.43	.61	.78	33.1	9.7	3.14	.44	.62	.80
13ACC-037 — CB28UH-036 - CB29M-41 TXV COOLING CAPACITY																										
63°F (17°C)	1050	495	33.3	9.8	2.16	.72	.88	1.00	32.1	9.4	2.44	.73	.90	1.00	30.9	9.1	2.76	.74	.92	1.00	29.7	8.7	3.12	.76	.94	1.00
	1200	565	34.0	10.0	2.17	.75	.93	1.00	32.8	9.6	2.45	.77	.95	1.00	31.6	9.3	2.77	.78	.97	1.00	30.4	8.9	3.12	.80	.98	1.00
	1350	635	34.7	10.2	2.17	.79	.96	1.00	33.5	9.8	2.45	.80	.98	1.00	32.3	9.5	2.77	.83	1.00	1.00	31.1	9.1	3.12	.85	1.00	1.00
67°F (19°C)	1050	495	35.3	10.3	2.17	.56	.69	.84	34.1	10.0	2.46	.56	.70	.86	32.7	9.6	2.77	.57	.72	.88	31.4	9.2	3.13	.58	.74	.90
	1200	565	35.9	10.5	2.18	.57	.73	.89	34.6	10.1	2.46	.58	.74	.91	33.3	9.8	2.78	.59	.76	.93	31.9	9.3	3.13	.60	.78	.95
	1350	635	36.4	10.7	2.18	.59	.76	.94	35.1	10.3	2.47	.60	.78	.96	33.7	9.9	2.78	.61	.80	.97	32.3	9.5	3.13	.63	.82	.99
71°F (22°C)	1050	495	37.6	11.0	2.19	.41	.54	.67	36.3	10.6	2.47	.41	.55	.68	34.9	10.2	2.79	.42	.56	.70	33.5	9.8	3.15	.42	.56	.71
	1200	565	38.2	11.2	2.20	.42	.56	.71	36.9	10.8	2.47	.42	.57	.72	35.4	10.4	2.79	.42	.58	.74	33.9	9.9	3.15	.43	.59	.75
	1350	635	38.7	11.3	2.20	.42	.58	.74	37.3	10.9	2.48	.43	.59	.76	35.8	10.5	2.80	.43	.60	.78	34.3	10.1	3.15	.44	.61	.80
13ACC-037 — CB28UH-042 - CB29M-46 TXV COOLING CAPACITY																										
63°F (17°C)	1050	495	34.5	10.1	2.17	.71	.88	1.00	33.2	9.7	2.45	.73	.90	1.00	32.0	9.4	2.76	.74	.92	1.00	30.6	9.0	3.11	.76	.94	1.00
	1200	565	35.3	10.3	2.17	.75	.93	1.00	34.0	10.0	2.45	.77	.95	1.00	32.7	9.6	2.77	.78	.97	1.00	31.4	9.2	3.12	.81	.98	1.00
	1350	635	36.0	10.6	2.18	.79	.97	1.00	34.7	10.2	2.46	.80	.99	1.00	33.5	9.8	2.77	.82	1.00	1.00	32.2	9.4	3.13	.85	1.00	1.00
67°F (19°C)	1050	495	36.6	10.7	2.18	.56	.69	.84	35.3	10.3	2.46	.56	.71	.86	33.9	9.9	2.78	.57	.72	.88	32.5	9.5	3.13	.58	.73	.91
	1200	565	37.3	10.9	2.19	.57	.73	.89	35.9	10.5	2.47	.58	.74	.91	34.5	10.1	2.78	.59	.76	.93	33.0	9.7	3.14	.60	.78	.96
	1350	635	37.8	11.1	2.19	.59	.76	.94	36.4	10.7	2.47	.60	.78	.96	34.9	10.2	2.79	.61	.80	.98	33.4	9.8	3.14	.62	.82	.99
71°F (22°C)	1050	495	39.1	11.5	2.20	.41	.54	.67	37.7	11.0	2.48	.41	.55	.68	36.2	10.6	2.80	.41	.56	.70	34.7	10.2	3.15	.42	.56	.71
	1200	565	39.8	11.7	2.20	.42	.56	.70	38.3	11.2	2.48	.42	.57	.72	36.8	10.8	2.80	.42	.58	.73	35.2	10.3	3.16	.43	.59	.75
	1350	635	40.3	11.8	2.21	.42	.58	.74	38.8	11.4	2.49	.43	.59	.76	37.2	10.9	2.81	.43	.60	.77	35.6	10.4	3.16	.44	.62	.80
13ACC-037 — CB30M-31 - CB30U-31 TXV COOLING CAPACITY																										
63°F (17°C)	1050	495	34.2	10.0	2.17	.72	.88	1.00	32.9	9.6	2.45	.73	.90	1.00	31.7	9.3	2.76	.74	.92	1.00	30.4	8.9	3.11	.76	.94	1.00
	1200	565	34.9	10.2	2.17	.75	.93	1.00	33.7	9.9	2.45	.77	.95	1.00	32.4	9.5	2.77	.79	.97	1.00	31.1	9.1	3.12	.81	.99	1.00
	1350	635	35.7	10.5	2.18	.79	.97	1.00	34.4	10.1	2.46	.81	.99	1.00	33.2	9.7	2.77	.83	1.00	1.00	31.9	9.3	3.13	.85	1.00	1.00
67°F (19°C)	1050	495	36.3	10.6	2.18	.55	.69	.84	35.0	10.3	2.46	.56	.70	.86	33.6	9.8	2.78	.57	.72	.88	32.2	9.4	3.13	.58	.73	.91
	1200	565	37.0	10.8	2.19	.57	.73	.89	35.6	10.4	2.47	.58	.74	.92	34.2	10.0	2.78	.59	.76	.93	32.7	9.6	3.14	.60	.78	.96
	1350	635	37.5	11.0	2.19	.59	.76	.94	36.1	10.6	2.47	.60	.78	.96	34.6	10.1	2.79	.61	.80	.98	33.1	9.7	3.14	.62	.82	1.00
71°F (22°C)	1050	495	38.8	11.4	2.20	.41	.54	.67	37.4	11.0	2.48	.41	.55	.68	35.9	10.5	2.80	.42	.56	.70	34.4	10.1	3.15	.42	.56	.71
	1200	565	39.4	11.5	2.20	.42	.56	.70	38.0	11.1	2.48	.42	.57	.72	36.5	10.7	2.80	.43	.58	.73	34.8	10.2	3.16	.43	.59	.75
	1350	635	39.9	11.7	2.21	.43	.58	.74	38.4	11.3	2.49	.43	.59	.76	36.9	10.8	2.81	.43	.60	.77	35.3	10.3	3.16	.44	.61	.80
13ACC-037 — CB30M-41 - CB30U-41/46 TXV COOLING CAPACITY																										
63°F (17°C)	1050	495	34.4	10.1	2.18	.72	.88	1.00	33.2	9.7	2.46	.73	.90	1.00	31.9	9.3	2.78	.74	.92	1.00	30.5	8.9	3.13	.76	.94	1.00
	1200	565	35.2	10.3	2.19	.75	.93	1.00	33.9	9.9	2.47	.77	.95	1.00	32.6	9.6	2.78	.78	.97	1.00	31.3	9.2	3.14	.81	.99	1.00
	1350	635	35.9	10.5	2.19	.79	.97	1.00	34.7	10.2	2.47	.81	.99	1.00	33.4	9.8	2.79	.83	1.00	1.00	32.2	9.4	3.14	.85	1.00	1.00
67°F (19°C)	1050	495	36.6	10.7	2.19	.56	.69	.84	35.2	10.3	2.48	.56	.70	.86	33.8	9.9	2.79	.57	.72	.88	32.3	9.5	3.15	.58	.74	.91
	1200	565	37.3	10.9	2.20	.57	.73	.89	35.9	10.5	2.48	.58	.74	.91	34.4	10.1	2.80	.59	.76	.94	32.9	9.6	3.16	.60	.78	.96
	1350	635	37.8	11.1	2.21	.59	.76	.94	36.4	10.7	2.49	.60	.78	.96	34.9	10.2	2.80	.61	.80	.98	33.4	9.8	3.16	.63	.82	1.00
71°F (22°C)	1050	495	39.1	11.5	2.21	.41	.54	.67	37.7	11.0	2.49	.41	.55	.68	36.2	10.6	2.81	.41	.55	.69	34.6	10.1	3.17	.42	.57	.71
	1200	565	39.8	11.7	2.22	.42	.56	.70	38.3	11.2	2.50	.42	.57	.72	36.7	10.8	2.82	.42	.58	.73	35.1	10.3	3.17	.43	.59	.75
	1350	635	40.3	11.8	2.23	.42	.58	.74	38.7	11.3	2.51	.43	.59	.75	37.2	10.9	2.82	.43	.60	.78	35.5	10.4	3.18	.44	.62	.80

NOTE - For Temperatures and Capacities not shown in tables, see bulletin - Cooling Unit Rating Table Correction Factor Data in Miscellaneous Engineering Data section.

Entering Wet Bulb Temperature	Total Air Volume		Outdoor Air Temperature Entering Outdoor Coil																							
			85°F (29°C)						95°F (35°C)						105°F (41°C)						115°F (46°C)					
			Total Cooling Capacity		Comp Motor kW Input	Sensible To Total Ratio (S/T) Dry Bulb			Total Cooling Capacity		Comp Motor kW Input	Sensible To Total Ratio (S/T) Dry Bulb			Total Cooling Capacity		Comp Motor kW Input	Sensible To Total Ratio (S/T) Dry Bulb			Total Cooling Capacity		Comp Motor kW Input	Sensible To Total Ratio (S/T) Dry Bulb		
	cfm	L/s	kBtuh	kW		75°F 24°C	80°F 27°C	85°F 29°C	kBtuh	kW		75°F 24°C	80°F 27°C	85°F 29°C	kBtuh	kW		75°F 24°C	80°F 27°C	85°F 29°C	kBtuh	kW		75°F 24°C	80°F 27°C	85°F 29°C
13ACC-037 — CB30M-46 TXV COOLING CAPACITY																										
63°F (17°C)	1050	495	34.5	10.1	2.18	.71	.87	1.00	33.1	9.7	2.46	.73	.90	1.00	31.8	9.3	2.77	.74	.92	1.00	30.4	8.9	3.12	.75	.95	1.00
	1200	565	35.3	10.3	2.19	.75	.93	1.00	33.9	9.9	2.46	.76	.96	1.00	32.6	9.6	2.78	.78	.98	1.00	31.2	9.1	3.13	.80	1.00	1.00
	1350	635	36.1	10.6	2.19	.79	.98	1.00	34.7	10.2	2.47	.81	1.00	1.00	33.5	9.8	2.79	.83	1.00	1.00	32.2	9.4	3.14	.85	1.00	1.00
67°F (19°C)	1050	495	36.8	10.8	2.20	.55	.69	.84	35.4	10.4	2.48	.56	.70	.86	33.9	9.9	2.79	.57	.71	.88	32.4	9.5	3.14	.57	.73	.91
	1200	565	37.6	11.0	2.20	.57	.72	.89	36.1	10.6	2.48	.58	.74	.92	34.6	10.1	2.80	.59	.76	.94	33.0	9.7	3.15	.60	.78	.97
	1350	635	38.2	11.2	2.21	.59	.76	.95	36.7	10.8	2.49	.60	.78	.97	35.1	10.3	2.80	.61	.80	.99	33.5	9.8	3.16	.63	.83	1.00
71°F (22°C)	1050	495	39.5	11.6	2.22	.41	.54	.66	38.0	11.1	2.50	.41	.54	.68	36.4	10.7	2.81	.41	.55	.69	34.7	10.2	3.17	.42	.56	.71
	1200	565	40.2	11.8	2.23	.42	.56	.70	38.7	11.3	2.51	.42	.56	.71	37.0	10.8	2.82	.42	.58	.73	35.3	10.3	3.17	.43	.59	.75
	1350	635	40.8	12.0	2.23	.42	.58	.73	39.2	11.5	2.51	.43	.59	.75	37.5	11.0	2.83	.43	.60	.77	35.8	10.5	3.18	.44	.62	.80
13ACC-037 — CB31MV-41 TXV COOLING CAPACITY																										
63°F (17°C)	1050	495	34.8	10.2	2.18	.72	.88	1.00	33.6	9.8	2.46	.73	.90	1.00	32.2	9.4	2.78	.74	.92	1.00	30.9	9.1	3.13	.76	.94	1.00
	1200	565	35.6	10.4	2.19	.75	.93	1.00	34.3	10.1	2.47	.77	.95	1.00	33.0	9.7	2.78	.78	.97	1.00	31.7	9.3	3.14	.80	.99	1.00
	1350	635	36.3	10.6	2.19	.79	.97	1.00	35.1	10.3	2.47	.80	.99	1.00	33.8	9.9	2.79	.83	1.00	1.00	32.5	9.5	3.14	.85	1.00	1.00
67°F (19°C)	1050	495	37.0	10.8	2.19	.55	.69	.84	35.7	10.5	2.48	.56	.70	.86	34.3	10.1	2.79	.57	.72	.88	32.7	9.6	3.15	.58	.74	.90
	1200	565	37.7	11.0	2.20	.57	.73	.89	36.3	10.6	2.48	.58	.74	.91	34.8	10.2	2.80	.59	.76	.94	33.3	9.8	3.16	.60	.78	.96
	1350	635	38.3	11.2	2.21	.59	.76	.94	36.8	10.8	2.49	.60	.78	.96	35.3	10.3	2.80	.61	.80	.98	33.8	9.9	3.16	.63	.82	1.00
71°F (22°C)	1050	495	39.6	11.6	2.21	.41	.54	.67	38.1	11.2	2.49	.41	.55	.68	36.6	10.7	2.81	.42	.56	.69	35.0	10.3	3.17	.42	.56	.71
	1200	565	40.2	11.8	2.22	.42	.56	.70	38.7	11.3	2.50	.42	.57	.71	37.1	10.9	2.82	.43	.58	.73	35.5	10.4	3.17	.43	.59	.75
	1350	635	40.8	12.0	2.23	.42	.58	.74	39.2	11.5	2.51	.43	.59	.75	37.6	11.0	2.82	.43	.60	.77	36.0	10.6	3.18	.44	.61	.80
13ACC-037 — CB30U-51 TXV COOLING CAPACITY																										
63°F (17°C)	1050	495	35.2	10.3	2.18	.71	.88	1.00	33.8	9.9	2.46	.72	.90	1.00	32.5	9.5	2.78	.74	.92	1.00	31.1	9.1	3.13	.76	.95	1.00
	1200	565	36.0	10.6	2.19	.75	.93	1.00	34.7	10.2	2.47	.77	.95	1.00	33.3	9.8	2.79	.78	.97	1.00	31.9	9.3	3.14	.81	1.00	1.00
	1350	635	36.8	10.8	2.19	.79	.98	1.00	35.5	10.4	2.47	.81	.99	1.00	34.2	10.0	2.79	.83	1.00	1.00	32.9	9.6	3.14	.85	1.00	1.00
67°F (19°C)	1050	495	37.5	11.0	2.20	.55	.69	.84	36.1	10.6	2.48	.56	.70	.86	34.6	10.1	2.79	.57	.72	.88	33.1	9.7	3.15	.58	.73	.91
	1200	565	38.3	11.2	2.20	.57	.72	.89	36.8	10.8	2.48	.58	.74	.92	35.2	10.3	2.80	.59	.76	.94	33.7	9.9	3.15	.60	.78	.97
	1350	635	38.9	11.4	2.21	.59	.76	.94	37.3	10.9	2.49	.60	.78	.96	35.8	10.5	2.80	.61	.80	.99	34.1	10.0	3.16	.63	.83	1.00
71°F (22°C)	1050	495	40.1	11.8	2.22	.41	.54	.66	38.6	11.3	2.50	.41	.54	.68	37.0	10.8	2.81	.42	.55	.69	35.4	10.4	3.17	.42	.56	.71
	1200	565	40.9	12.0	2.23	.42	.56	.70	39.3	11.5	2.51	.42	.57	.72	37.7	11.0	2.82	.42	.58	.73	36.0	10.6	3.18	.43	.59	.75
	1350	635	41.5	12.2	2.23	.42	.58	.73	39.8	11.7	2.51	.43	.59	.75	38.1	11.2	2.83	.43	.60	.78	36.4	10.7	3.18	.44	.62	.80
13ACC-037 — CB30M-51 TXV COOLING CAPACITY																										
63°F (17°C)	1050	495	35.9	10.5	2.19	.71	.88	1.00	34.6	10.1	2.47	.73	.90	1.00	33.2	9.7	2.79	.74	.92	1.00	31.7	9.3	3.15	.76	.95	1.00
	1200	565	36.8	10.8	2.20	.75	.93	1.00	35.4	10.4	2.48	.76	.95	1.00	34.0	10.0	2.80	.79	.97	1.00	32.6	9.6	3.15	.80	1.00	1.00
	1350	635	37.6	11.0	2.20	.79	.98	1.00	36.2	10.6	2.48	.81	.99	1.00	34.9	10.2	2.80	.83	1.00	1.00	33.6	9.8	3.15	.85	1.00	1.00
67°F (19°C)	1050	495	38.3	11.2	2.21	.55	.69	.84	36.9	10.8	2.49	.56	.70	.86	35.3	10.3	2.80	.57	.72	.88	33.8	9.9	3.16	.58	.73	.91
	1200	565	39.1	11.5	2.21	.57	.72	.89	37.6	11.0	2.49	.58	.74	.92	36.0	10.6	2.81	.59	.76	.94	34.4	10.1	3.17	.60	.78	.97
	1350	635	39.7	11.6	2.22	.59	.76	.94	38.1	11.2	2.50	.60	.78	.97	36.5	10.7	2.82	.61	.80	.99	34.9	10.2	3.17	.63	.83	1.00
71°F (22°C)	1050	495	41.0	12.0	2.23	.41	.54	.67	39.5	11.6	2.51	.41	.54	.68	37.8	11.1	2.83	.41	.55	.69	36.2	10.6	3.18	.42	.56	.71
	1200	565	41.7	12.2	2.23	.42	.56	.70	40.1	11.8	2.51	.42	.57	.71	38.5	11.3	2.83	.42	.58	.73	36.7	10.8	3.19	.43	.59	.75
	1350	635	42.3	12.4	2.24	.42	.58	.73	40.7	11.9	2.52	.43	.59	.75	39.0	11.4	2.84	.43	.60	.77	37.2	10.9	3.19	.44	.62	.80
13ACC-037 — CB31MV-51 TXV COOLING CAPACITY																										
63°F (17°C)	1050	495	36.1	10.6	2.19	.71	.88	1.00	34.8	10.2	2.47	.72	.90	1.00	33.3	9.8	2.79	.74	.92	1.00	31.9	9.3	3.15	.76	.95	1.00
	1200	565	36.9	10.8	2.20	.75	.93	1.00	35.6	10.4	2.48	.76	.95	1.00	34.2	10.0	2.80	.78	.98	1.00	32.8	9.6	3.15	.81	.99	1.00
	1350	635	37.8	11.1	2.20	.79	.98	1.00	36.4	10.7	2.48	.81	.99	1.00	35.1	10.3	2.80	.83	1.00	1.00	33.7	9.9	3.15	.85	1.00	1.00
67°F (19°C)	1050	495	38.5	11.3	2.21	.55	.69	.84	37.1	10.9	2.49	.56	.70	.86	35.5	10.4	2.80	.57	.72	.88	33.9	9.9	3.16	.58	.73	.91
	1200	565	39.3	11.5	2.21	.57	.72	.89	37.8	11.1	2.49	.58	.74	.92	36.2	10.6	2.81	.59	.76	.94	34.6	10.1	3.17	.60	.78	.97
	1350	635	39.9	11.7	2.22	.59	.76	.94	38.3	11.2	2.50	.60	.78	.97	36.7	10.8	2.82	.61	.80	.99	35.1	10.3	3.17	.62	.82	1.00
71°F (22°C)	1050	495	41.2	12.1	2.23	.41	.54	.66	39.7	11.6	2.51	.41	.54	.68	38.0	11.1	2.83	.42	.55	.69	36.4	10.7	3.18	.42	.56	.71
	1200	565	42.0	12.3	2.23	.42	.56	.70	40.4	11.8	2.51	.42	.57	.71	38.7	11.3	2.83	.42	.58	.73	36.9	10.8	3.19	.43	.59	.75
	1350	635	42.6	12.5	2.24	.42	.58	.74	40.9	12.0	2.52	.43	.59	.75	39.2	11.5	2.84	.43	.60	.77	37.4	11.0	3.19	.44	.61	.80
13ACC-037 — CVP10-46/EC10Q4 TXV COOLING CAPACITY																										
63°F (17°C)	1050	495	34.3	10.1	2300	.75	.89	1.00	33.1	9.7	2590	.76	.91	1.00	31.8	9.3	2930	.78	.93	1.00	30.4	8.9	3320	.79	.95	1.00
	1200	565	35.1	10.3	2310	.78	.94	1.00	33.9	9.9	2600	.80	.95	1.00	32.5	9.5	2940	.81	.97	1.00	31.1	9.1	3330	.83	.99	1.00
	1350	635	35.8	10.5	2310	.82	.97	1.00	34.6	10.1	2610	.83	.99	1.00	33.2	9.7	2950	.85	1.00	1.00	31.9	9.3	3330	.87	1.00	1.00
67°F (19°C)	1050	495	36.5	10.7	2320	.59	.73	.86	35.2	10.3	2610	.59	.74	.88	33.8	9.9	2950	.60	.75	.90	32.3	9.5	3340	.61	.77	.92
	1200	565	37.3	10.9	2320	.61	.76	.90	35.9	10.5	2620	.61	.77	.92	34.4	10.1	2960	.62	.79	.94	32.9	9.6	3350	.63	.81	.96
	1350	635	37.8	11.1	2330	.62	.79	.94	36.4	10.7	2620	.63	.81	.96	34.9	10.2	2960	.64	.83	.98	33.3	9.8	3350	.66	.85	1.00
71°F (22°C)	1050	495	39.0	11.4	2340	.44	.57	.70	37.6	11.0	2630	.44	.58	.71	36.1	10.6	2980	.44	.58	.73	34.5	10.1	3370	.45	.59	.74
	1200	565	39.7	11.6	2340	.44	.59	.73	38.2	11.2	2640	.45	.60	.75	36.7	10.8	2980	.45	.61	.76	35.1	10.3	3380	.45	.62	.78
	1350	635	40.3	11.8	2350	.45	.61	.77	38.8	11.4	2650	.46	.62	.78	37.2	10.9	2990	.46	.63	.80	35.5	10.4	3380	.46	.64	.82
13ACC-037 — CVP10-41/EC10Q3 TXV COOLING CAPACITY																										
63°F (17°C)	1050	495	34.6	10.1	2300	.75	.90	1.00	33.3	9.8	2600	.77	.91	1.00	32.0	9.4	2940	.78	.93	1.00	30.6	9.0	3320	.80	.95	1.00
	1200	565	35.4	10.4	2310	.79	.94	1.00	34.1	10.0	2600	.80	.96	1.00	32.7	9.6	2940	.82	.98	1.00	31.4	9.2	3330	.84	1.00	1.00
	1350	635	36.1	10.6	2310	.82	.98	1.00	34.8	10.2	2610	.84	.99	1.00	33.5	9.8	2950	.85	1.00	1.00	32.1	9.4	3340	.87	1.00	1.00
67°F (19°C)	1050	495	36.7	10.8	2320	.59	.73	.86	35.4	10.4	2620	.60	.74	.88	34.0	10.0	2950	.60	.76	.90	32.5	9.5	3340	.61	.77	.92
	1200	565	37.5	11.0	2320	.61	.76	.91	36.1	10.6	2620	.62	.78	.93	34.6	10.1	2960	.63	.79	.95	33.0	9.7	3350	.64	.81	.97
	1350	635	38.0	11.1	2330	.63	.80	.95	36.6	10.7	2620	.64	.81	.97	35.1	10.3	2970	.65	.83	.99	33.5	9.8	3360	.66	.85	1.00
71°F (22°C)	1050	495	39.2	11.5	2340	.44	.57	.70	37.8	11.1	2640	.44	.58	.72	36.3	10.6	2980	.44	.59	.73	34.7	10.2	3370	.45	.60	.75
	1200	565	39.9	11.7	2350	.45	.59	.74	38.5	11.3	2640	.45	.60	.75	36.9	10.8	2990	.45	.61	.77	35.2	10.3	3380	.46	.62	.79
	1350	635	40.5	11.9	2350	.45	.61	.77	39.0	11.4	2650	.46	.62	.79	37.3	10.9	2990	.46	.64	.81	35.7	10.5	3380	.47	.65	.83

NOTE - For Temperatures and Capacities not shown in tables, see bulletin - Cooling Unit Rating Table Correction Factor Data in Miscellaneous Engineering Data section.

Entering Wet Bulb Temperature	Total Air Volume		Outdoor Air Temperature Entering Outdoor Coil																							
			85°F (29°C)						95°F (35°C)						105°F (41°C)						115°F (46°C)					
			Total Cooling Capacity		Comp Motor kW Input	Sensible To Total Ratio (S/T) Dry Bulb			Total Cooling Capacity		Comp Motor kW Input	Sensible To Total Ratio (S/T) Dry Bulb			Total Cooling Capacity		Comp Motor kW Input	Sensible To Total Ratio (S/T) Dry Bulb			Total Cooling Capacity		Comp Motor kW Input	Sensible To Total Ratio (S/T) Dry Bulb		
	cfm	L/s	kBtuh	kW		75°F 24°C	80°F 27°C	85°F 29°C	kBtuh	kW		75°F 24°C	80°F 27°C	85°F 29°C	kBtuh	kW		75°F 24°C	80°F 27°C	85°F 29°C	kBtuh	kW		75°F 24°C	80°F 27°C	85°F 29°C
13ACC-042 — C33-42B TXV and RFC COOLING CAPACITY																										
63°F (17°C)	1250	590	38.2	11.2	2.42	.74	.91	1.00	36.9	10.8	2.74	.75	.93	1.00	35.6	10.4	3.11	.76	.94	1.00	34.2	10.0	3.52	.79	.96	1.00
	1400	660	38.9	11.4	2.43	.77	.95	1.00	37.6	11.0	2.75	.78	.96	1.00	36.3	10.6	3.11	.80	.98	1.00	34.9	10.2	3.53	.82	.99	1.00
	1550	730	39.6	11.6	2.43	.80	.97	1.00	38.3	11.2	2.75	.82	.99	1.00	37.0	10.8	3.12	.84	1.00	1.00	35.6	10.4	3.53	.86	1.00	1.00
67°F (19°C)	1250	590	40.4	11.8	2.43	.57	.71	.87	39.0	11.4	2.75	.57	.73	.89	37.5	11.0	3.12	.58	.74	.91	36.0	10.6	3.53	.59	.76	.93
	1400	660	40.9	12.0	2.44	.59	.75	.91	39.5	11.6	2.76	.59	.76	.93	38.0	11.1	3.12	.60	.78	.95	36.5	10.7	3.53	.61	.80	.97
	1550	730	41.4	12.1	2.44	.60	.77	.95	39.9	11.7	2.76	.61	.79	.97	38.5	11.3	3.12	.62	.81	.98	36.9	10.8	3.54	.63	.83	1.00
71°F (22°C)	1250	590	43.0	12.6	2.45	.42	.55	.69	41.6	12.2	2.77	.42	.56	.70	40.1	11.8	3.14	.42	.57	.72	38.4	11.3	3.55	.42	.58	.73
	1400	660	43.6	12.8	2.46	.42	.57	.72	42.1	12.3	2.78	.42	.58	.74	40.5	11.9	3.14	.43	.59	.75	38.8	11.4	3.55	.43	.60	.77
	1550	730	44.0	12.9	2.46	.43	.59	.75	42.5	12.5	2.78	.43	.60	.77	40.9	12.0	3.14	.44	.61	.79	39.2	11.5	3.55	.44	.62	.81
13ACC-042 — C26-41 TXV and RFC COOLING CAPACITY																										
63°F (17°C)	1250	590	38.2	11.2	2.43	.74	.91	1.00	36.9	10.8	2.75	.75	.93	1.00	35.6	10.4	3.11	.76	.94	1.00	34.1	10.0	3.52	.78	.97	1.00
	1400	660	39.0	11.4	2.43	.77	.95	1.00	37.7	11.0	2.75	.78	.97	1.00	36.3	10.6	3.12	.80	.99	1.00	34.9	10.2	3.52	.82	1.00	1.00
	1550	730	39.8	11.7	2.44	.80	.98	1.00	38.5	11.3	2.76	.82	.99	1.00	37.2	10.9	3.12	.84	1.00	1.00	35.8	10.5	3.53	.86	1.00	1.00
67°F (19°C)	1250	590	40.5	11.9	2.44	.57	.71	.87	39.1	11.5	2.76	.57	.72	.89	37.6	11.0	3.13	.58	.74	.91	36.0	10.6	3.54	.59	.75	.93
	1400	660	41.1	12.0	2.45	.58	.74	.91	39.7	11.6	2.76	.59	.76	.93	38.1	11.2	3.13	.60	.78	.96	36.5	10.7	3.54	.61	.80	.98
	1550	730	41.6	12.2	2.45	.60	.78	.95	40.2	11.8	2.77	.61	.79	.97	38.6	11.3	3.14	.62	.82	.99	37.0	10.8	3.54	.64	.84	1.00
71°F (22°C)	1250	590	43.3	12.7	2.47	.41	.55	.69	41.7	12.2	2.78	.42	.56	.70	40.1	11.8	3.14	.42	.57	.72	38.4	11.3	3.55	.42	.58	.73
	1400	660	43.8	12.8	2.48	.42	.57	.72	42.3	12.4	2.79	.42	.58	.74	40.6	11.9	3.15	.43	.59	.75	38.9	11.4	3.56	.43	.60	.77
	1550	730	44.3	13.0	2.48	.43	.59	.75	42.7	12.5	2.79	.43	.60	.77	41.1	12.0	3.15	.44	.61	.79	39.3	11.5	3.56	.44	.63	.81
13ACC-042 — C26-46 TXV and RFC COOLING CAPACITY																										
63°F (17°C)	1250	590	38.7	11.3	2.42	.73	.91	1.00	37.3	10.9	2.73	.74	.92	1.00	35.9	10.5	3.09	.76	.95	1.00	34.4	10.1	3.50	.78	.97	1.00
	1400	660	39.5	11.6	2.42	.76	.95	1.00	38.1	11.2	2.74	.78	.97	1.00	36.7	10.8	3.10	.80	.99	1.00	35.3	10.3	3.50	.82	1.00	1.00
	1550	730	40.2	11.8	2.43	.80	.98	1.00	38.9	11.4	2.74	.82	1.00	1.00	37.6	11.0	3.10	.84	1.00	1.00	36.2	10.6	3.51	.86	1.00	1.00
67°F (19°C)	1250	590	41.0	12.0	2.44	.57	.71	.87	39.6	11.6	2.75	.57	.72	.89	38.0	11.1	3.11	.58	.74	.91	36.4	10.7	3.52	.59	.75	.93
	1400	660	41.7	12.2	2.44	.58	.74	.91	40.2	11.8	2.76	.59	.75	.93	38.6	11.3	3.11	.60	.77	.95	36.9	10.8	3.52	.61	.79	.98
	1550	730	42.2	12.4	2.45	.60	.77	.95	40.7	11.9	2.76	.61	.79	.97	39.1	11.5	3.12	.62	.81	.99	37.4	11.0	3.53	.63	.84	1.00
71°F (22°C)	1250	590	43.8	12.8	2.46	.41	.55	.69	42.3	12.4	2.78	.42	.56	.70	40.6	11.9	3.13	.42	.57	.71	38.9	11.4	3.54	.42	.58	.73
	1400	660	44.4	13.0	2.47	.42	.57	.72	42.8	12.5	2.78	.42	.58	.73	41.2	12.1	3.14	.43	.59	.75	39.4	11.5	3.54	.43	.60	.77
	1550	730	44.9	13.2	2.48	.43	.59	.75	43.3	12.7	2.79	.43	.60	.77	41.6	12.2	3.14	.44	.61	.78	39.8	11.7	3.55	.44	.63	.81
13ACC-042 — C26-51/65 TXV and RFC COOLING CAPACITY																										
63°F (17°C)	1250	590	39.1	11.5	2.43	.73	.91	1.00	37.8	11.1	2.74	.74	.92	1.00	36.3	10.6	3.11	.76	.95	1.00	34.8	10.2	3.51	.78	.97	1.00
	1400	660	40.0	11.7	2.44	.76	.95	1.00	38.6	11.3	2.75	.78	.97	1.00	37.1	10.9	3.11	.80	.99	1.00	35.6	10.4	3.52	.82	1.00	1.00
	1550	730	40.7	11.9	2.44	.80	.98	1.00	39.4	11.5	2.76	.82	1.00	1.00	38.0	11.1	3.12	.84	1.00	1.00	36.6	10.7	3.52	.86	1.00	1.00
67°F (19°C)	1250	590	41.6	12.2	2.45	.56	.71	.87	40.1	11.8	2.76	.57	.72	.89	38.5	11.3	3.12	.58	.74	.91	36.8	10.8	3.53	.59	.75	.93
	1400	660	42.3	12.4	2.46	.58	.74	.91	40.7	11.9	2.77	.59	.75	.93	39.1	11.5	3.13	.60	.77	.96	37.4	11.0	3.54	.61	.79	.98
	1550	730	42.8	12.5	2.46	.60	.77	.95	41.3	12.1	2.78	.61	.79	.97	39.6	11.6	3.14	.62	.81	.99	37.8	11.1	3.54	.63	.84	1.00
71°F (22°C)	1250	590	44.5	13.0	2.48	.41	.55	.68	42.9	12.6	2.79	.42	.56	.70	41.2	12.1	3.15	.42	.56	.71	39.4	11.5	3.55	.42	.58	.73
	1400	660	45.1	13.2	2.49	.42	.57	.71	43.5	12.7	2.80	.42	.58	.73	41.8	12.3	3.15	.43	.59	.75	39.9	11.7	3.56	.43	.60	.77
	1550	730	45.6	13.4	2.49	.43	.59	.75	44.0	12.9	2.81	.43	.60	.76	42.2	12.4	3.16	.43	.61	.78	40.3	11.8	3.56	.44	.62	.81
13ACC-042 — C23-51 TXV and RFC COOLING CAPACITY																										
63°F (17°C)	1250	590	39.5	11.6	2.43	.73	.90	1.00	38.2	11.2	2.75	.74	.91	1.00	36.7	10.8	3.12	.75	.94	1.00	35.2	10.3	3.54	.77	.96	1.00
	1400	660	40.3	11.8	2.44	.76	.94	1.00	38.9	11.4	2.76	.77	.96	1.00	37.5	11.0	3.13	.79	.97	1.00	36.0	10.6	3.53	.81	.99	1.00
	1550	730	41.0	12.0	2.45	.79	.97	1.00	39.7	11.6	2.77	.80	.98	1.00	38.3	11.2	3.13	.83	1.00	1.00	36.9	10.8	3.54	.85	1.00	1.00
67°F (19°C)	1250	590	42.0	12.3	2.45	.56	.70	.86	40.6	11.9	2.77	.57	.71	.88	39.0	11.4	3.13	.57	.73	.90	37.3	10.9	3.55	.59	.74	.92
	1400	660	42.7	12.5	2.46	.58	.73	.90	41.2	12.1	2.77	.58	.74	.92	39.5	11.6	3.14	.59	.76	.94	37.8	11.1	3.55	.61	.79	.96
	1550	730	43.2	12.7	2.46	.59	.76	.94	41.7	12.2	2.78	.60	.78	.96	40.0	11.7	3.14	.61	.80	.98	38.3	11.2	3.55	.62	.82	.99
71°F (22°C)	1250	590	44.9	13.2	2.48	.41	.55	.68	43.4	12.7	2.79	.41	.55	.69	41.7	12.2	3.15	.42	.56	.70	39.9	11.7	3.57	.42	.57	.72
	1400	660	45.6	13.4	2.48	.42	.56	.71	43.9	12.9	2.80	.42	.57	.72	42.2	12.4	3.16	.43	.58	.74	40.4	11.8	3.57	.43	.59	.76
	1550	730	46.1	13.5	2.49	.42	.58	.74	44.4	13.0	2.80	.43	.59	.75	42.7	12.5	3.16	.43	.60	.77	40.9	12.0	3.57	.44	.61	.79
13ACC-042 — C33-44C TXV and RFC COOLING CAPACITY																										
63°F (17°C)	1250	590	39.6	11.6	2.43	.72	.89	1.00	38.2	11.2	2.75	.73	.91	1.00	36.8	10.8	3.11	.75	.93	1.00	35.3	10.3	3.53	.77	.95	1.00
	1400	660	40.3	11.8	2.44	.75	.93	1.00	39.0	11.4	2.76	.77	.95	1.00	37.6	11.0	3.12	.79	.97	1.00	36.0	10.6	3.53	.81	.99	1.00
	1550	730	41.1	12.0	2.44	.78	.96	1.00	39.7	11.6	2.76	.80	.98	1.00	38.3	11.2	3.12	.82	.99	1.00	36.9	10.8	3.53	.84	1.00	1.00
67°F (19°C)	1250	590	42.1	12.3	2.45	.56	.70	.85	40.6	11.9	2.77	.56	.71	.87	39.1	11.5	3.13	.57	.72	.89	37.4	11.0	3.54	.58	.74	.92
	1400	660	42.7	12.5	2.45	.57	.73	.90	41.2	12.1	2.77	.58	.74	.92	39.6	11.6	3.13	.59	.76	.93	37.9	11.1	3.55	.60	.78	.96
	1550	730	43.3	12.7	2.46	.59	.76	.93	41.7	12.2	2.77	.60	.78	.95	40.1	11.8	3.14	.61	.79	.97	38.4	11.3	3.55	.62	.82	.99
71°F (22°C)	1250	590	45.0	13.2	2.47	.41	.54	.68	43.5	12.7	2.79	.41	.55	.69	41.8	12.3	3.15	.42	.56	.70	40.0	11.7	3.56	.42	.57	.72
	1400	660	45.6	13.4	2.48	.42	.56	.70	44.0	12.9	2.79	.42	.57	.72	42.3	12.4	3.15	.42	.58	.73	40.5	11.9	3.57	.43	.59	.75
	1550	730	46.1	13.5	2.48	.42	.58	.73	44.5	13.0	2.80	.43	.59	.75	42.8	12.5	3.16	.43	.60	.77	41.0	12.0	3.57	.44	.61	.79
13ACC-042 — C33-48B/C TXV and RFC COOLING CAPACITY																										
63°F (17°C)	1250	590	39.5	11.6	2.43	.72	.89	1.00	38.2	11.2	2.75	.73	.91	1.00	36.8	10.8	3.11	.75	.93	1.00	35.2	10.3	3.53	.77	.95	1.00
	1400	660	40.3	11.8	2.44	.75	.93	1.00	38.9	11.4	2.76	.77	.95	1.00	37.5	11.0	3.12	.79	.97	1.00	36.0	10.6	3.53	.81	.99	1.00
	1550	730	41.0	12.0	2.44	.79	.96	1.00	39.7	11.6	2.76	.80	.98	1.00	38.3	11.2	3.12	.82	.99	1.00	36.8	10.8	3.53	.84	1.00	1.00
67°F (19°C)	1250	590	42.1	12.3	2.45	.56	.70	.86	40.6	11.9	2.77	.57	.71	.87	39.0	11.4	3.13	.57	.73	.89	37.4	11.0	3.54	.58	.74	.92
	1400	660	42.7	12.5	2.45	.57	.73	.90	41.2	12.1	2.77	.58	.74	.92	39.6	11.6	3.13	.59	.76	.94	37.9	11.1	3.55	.60	.78	.96
	1550	730	43.2	12.7	2.46	.59	.76	.93	41.7	12.2	2.77	.60	.77	.95	40.1	11.8	3.14	.61	.79	.97	38.3	11.2	3.55	.62	.82	.99
71°F (22°C)	1250	590	45.0	13.2	2.47	.41	.54	.67	43.4	12.7	2.79	.41	.55	.69	41.8	12.3	3.15	.42	.56	.70	40.0	11.7	3.56	.42	.57	.72
	1400	660	45.6	13.4	2.48	.42	.56	.70	44.0	12.9	2.79	.42	.57	.72	42.3	12.4	3.15	.42	.58	.73	40.5	11.9	3.57	.43	.59	.75
	1550	730	46.1	13.5	2.48	.42	.58	.73	44.5	13.0	2.80	.43	.59	.75	42.7	12.5	3.16	.43	.60	.77	40.9	12.0	3.57	.44	.61	.79

NOTE - For Temperatures and Capacities not shown in tables, see bulletin - Cooling Unit Rating Table Correction Factor Data in Miscellaneous Engineering Data section.

Entering Wet Bulb Temperature	Total Air Volume		Outdoor Air Temperature Entering Outdoor Coil																							
			85°F (29°C)						95°F (35°C)						105°F (41°C)						115°F (46°C)					
			Total Cooling Capacity		Comp Motor kW Input	Sensible To Total Ratio (S/T) Dry Bulb			Total Cooling Capacity		Comp Motor kW Input	Sensible To Total Ratio (S/T) Dry Bulb			Total Cooling Capacity		Comp Motor kW Input	Sensible To Total Ratio (S/T) Dry Bulb			Total Cooling Capacity		Comp Motor kW Input	Sensible To Total Ratio (S/T) Dry Bulb		
	cfm	L/s	kBtuh	kW		75°F 24°C	80°F 27°C	85°F 29°C	kBtuh	kW		75°F 24°C	80°F 27°C	85°F 29°C	kBtuh	kW		75°F 24°C	80°F 27°C	85°F 29°C	kBtuh	kW		75°F 24°C	80°F 27°C	85°F 29°C
13ACC-042 — C33-50/60C TXV and RFC COOLING CAPACITY																										
63°F (17°C)	1250	590	40.0	11.7	2.44	.72	.89	1.00	38.6	11.3	2.76	.73	.91	1.00	37.1	10.9	3.12	.75	.93	1.00	35.6	10.4	3.53	.77	.95	1.00
	1400	660	40.8	12.0	2.44	.75	.93	1.00	39.4	11.5	2.76	.77	.95	1.00	37.9	11.1	3.12	.78	.97	1.00	36.4	10.7	3.54	.81	.99	1.00
	1550	730	41.5	12.2	2.45	.79	.97	1.00	40.1	11.8	2.76	.80	.98	1.00	38.7	11.3	3.13	.82	1.00	1.00	37.2	10.9	3.54	.84	1.00	1.00
67°F (19°C)	1250	590	42.6	12.5	2.46	.56	.70	.85	41.1	12.0	2.77	.56	.71	.87	39.5	11.6	3.14	.57	.72	.89	37.8	11.1	3.55	.58	.74	.91
	1400	660	43.2	12.7	2.46	.57	.73	.90	41.7	12.2	2.78	.58	.74	.92	40.0	11.7	3.14	.59	.76	.94	38.3	11.2	3.55	.60	.78	.96
	1550	730	43.8	12.8	2.47	.59	.76	.94	42.2	12.4	2.79	.60	.78	.95	40.6	11.9	3.15	.61	.79	.97	38.8	11.4	3.56	.62	.82	.99
71°F (22°C)	1250	590	45.6	13.4	2.48	.41	.54	.67	43.9	12.9	2.80	.41	.55	.69	42.2	12.4	3.16	.42	.56	.70	40.4	11.8	3.57	.42	.57	.72
	1400	660	46.2	13.5	2.49	.42	.56	.70	44.5	13.0	2.80	.42	.57	.72	42.8	12.5	3.16	.42	.58	.73	41.0	12.0	3.57	.43	.59	.75
	1550	730	46.7	13.7	2.49	.42	.58	.73	45.0	13.2	2.81	.43	.59	.75	43.3	12.7	3.17	.43	.60	.77	41.4	12.1	3.58	.44	.61	.79
13ACC-042 — CR26-36N/W TXV and RFC COOLING CAPACITY																										
63°F (17°C)	1250	590	38.2	11.2	2.42	.73	.90	1.00	36.9	10.8	2.74	.74	.92	1.00	35.6	10.4	3.11	.76	.94	1.00	34.1	10.0	3.52	.78	.96	1.00
	1400	660	38.9	11.4	2.43	.76	.94	1.00	37.7	11.0	2.75	.78	.96	1.00	36.3	10.6	3.11	.80	.98	1.00	34.9	10.2	3.52	.82	.99	1.00
	1550	730	39.7	11.6	2.43	.79	.97	1.00	38.4	11.3	2.75	.81	.99	1.00	37.0	10.8	3.12	.83	1.00	1.00	35.7	10.5	3.52	.86	1.00	1.00
67°F (19°C)	1250	590	40.5	11.9	2.44	.56	.71	.86	39.1	11.5	2.76	.57	.72	.88	37.6	11.0	3.12	.58	.74	.90	36.0	10.6	3.53	.59	.75	.93
	1400	660	41.1	12.0	2.44	.58	.74	.91	39.7	11.6	2.76	.59	.75	.93	38.1	11.2	3.12	.60	.77	.95	36.5	10.7	3.54	.61	.79	.97
	1550	730	41.6	12.2	2.45	.60	.77	.94	40.1	11.8	2.76	.61	.79	.96	38.6	11.3	3.13	.62	.81	.98	37.0	10.8	3.54	.63	.83	.99
71°F (22°C)	1250	590	43.3	12.7	2.46	.41	.55	.68	41.8	12.3	2.78	.42	.56	.70	40.2	11.8	3.14	.42	.56	.71	38.5	11.3	3.54	.42	.57	.73
	1400	660	43.9	12.9	2.47	.42	.57	.71	42.3	12.4	2.78	.42	.58	.73	40.7	11.9	3.14	.43	.59	.74	39.0	11.4	3.55	.43	.60	.76
	1550	730	44.3	13.0	2.47	.43	.59	.75	42.8	12.5	2.79	.43	.59	.76	41.1	12.0	3.15	.43	.61	.78	39.3	11.5	3.56	.44	.62	.80
13ACC-042 — CR26-48N/W TXV and RFC COOLING CAPACITY																										
63°F (17°C)	1250	590	39.0	11.4	2.43	.72	.89	1.00	37.7	11.0	2.74	.73	.91	1.00	36.2	10.6	3.11	.75	.93	1.00	34.8	10.2	3.53	.77	.95	1.00
	1400	660	39.8	11.7	2.43	.75	.93	1.00	38.4	11.3	2.75	.76	.95	1.00	37.0	10.8	3.12	.78	.96	1.00	35.5	10.4	3.52	.80	.98	1.00
	1550	730	40.5	11.9	2.44	.78	.96	1.00	39.1	11.5	2.76	.80	.98	1.00	37.7	11.0	3.12	.82	.99	1.00	36.3	10.6	3.53	.84	1.00	1.00
67°F (19°C)	1250	590	41.6	12.2	2.45	.56	.70	.85	40.1	11.8	2.76	.56	.71	.87	38.5	11.3	3.13	.57	.72	.89	36.9	10.8	3.54	.58	.74	.91
	1400	660	42.2	12.4	2.45	.57	.72	.89	40.7	11.9	2.77	.58	.74	.91	39.1	11.5	3.13	.59	.76	.93	37.4	11.0	3.54	.60	.78	.96
	1550	730	42.7	12.5	2.45	.59	.75	.93	41.2	12.1	2.77	.60	.77	.95	39.6	11.6	3.13	.61	.79	.97	37.9	11.1	3.54	.62	.81	.99
71°F (22°C)	1250	590	44.5	13.0	2.47	.41	.54	.67	42.9	12.6	2.79	.41	.55	.68	41.3	12.1	3.14	.42	.56	.70	39.5	11.6	3.56	.42	.57	.71
	1400	660	45.1	13.2	2.48	.42	.56	.70	43.5	12.7	2.79	.42	.57	.71	41.8	12.3	3.15	.42	.58	.73	40.0	11.7	3.56	.43	.59	.75
	1550	730	45.6	13.4	2.48	.42	.58	.73	44.0	12.9	2.80	.43	.59	.74	42.3	12.4	3.16	.43	.60	.76	40.5	11.9	3.56	.43	.61	.78
13ACC-042 — CH23-41 TXV and RFC COOLING CAPACITY																										
63°F (17°C)	1250	590	38.8	11.4	2.43	.73	.90	1.00	37.5	11.0	2.75	.75	.92	1.00	36.1	10.6	3.11	.76	.94	1.00	34.6	10.1	3.53	.78	.96	1.00
	1400	660	39.5	11.6	2.43	.76	.94	1.00	38.2	11.2	2.75	.78	.96	1.00	36.8	10.8	3.12	.80	.98	1.00	35.4	10.4	3.53	.82	.99	1.00
	1550	730	40.2	11.8	2.44	.80	.98	1.00	38.9	11.4	2.76	.81	.99	1.00	37.6	11.0	3.12	.83	1.00	1.00	36.2	10.6	3.53	.86	1.00	1.00
67°F (19°C)	1250	590	41.1	12.0	2.44	.56	.71	.87	39.6	11.6	2.76	.57	.72	.88	38.1	11.2	3.12	.58	.74	.90	36.6	10.7	3.53	.59	.75	.93
	1400	660	41.6	12.2	2.45	.58	.74	.91	40.2	11.8	2.76	.59	.75	.93	38.7	11.3	3.13	.60	.77	.95	37.0	10.8	3.54	.61	.79	.97
	1550	730	42.2	12.4	2.45	.60	.77	.95	40.7	11.9	2.77	.61	.79	.96	39.1	11.5	3.13	.62	.81	.98	37.5	11.0	3.55	.63	.83	1.00
71°F (22°C)	1250	590	43.9	12.9	2.46	.41	.55	.69	42.3	12.4	2.78	.42	.56	.70	40.7	11.9	3.14	.42	.57	.71	39.0	11.4	3.55	.42	.58	.73
	1400	660	44.4	13.0	2.47	.42	.57	.72	42.9	12.6	2.78	.42	.58	.73	41.2	12.1	3.15	.43	.59	.75	39.5	11.6	3.56	.43	.60	.76
	1550	730	44.9	13.2	2.47	.43	.59	.75	43.3	12.7	2.79	.43	.60	.76	41.6	12.2	3.15	.44	.61	.78	39.9	11.7	3.56	.44	.62	.80
13ACC-042 — CH23-51 TXV and RFC COOLING CAPACITY																										
63°F (17°C)	1250	590	38.6	11.3	2.42	.73	.90	1.00	37.3	10.9	2.74	.74	.92	1.00	35.9	10.5	3.10	.75	.94	1.00	34.5	10.1	3.52	.77	.96	1.00
	1400	660	39.4	11.5	2.43	.76	.94	1.00	38.1	11.2	2.74	.77	.95	1.00	36.7	10.8	3.11	.79	.97	1.00	35.2	10.3	3.52	.81	.99	1.00
	1550	730	40.1	11.8	2.43	.79	.97	1.00	38.8	11.4	2.75	.81	.98	1.00	37.4	11.0	3.11	.83	1.00	1.00	36.0	10.6	3.52	.85	1.00	1.00
67°F (19°C)	1250	590	41.0	12.0	2.44	.56	.70	.86	39.6	11.6	2.75	.57	.72	.88	38.1	11.2	3.12	.58	.73	.90	36.5	10.7	3.52	.59	.74	.92
	1400	660	41.6	12.2	2.44	.58	.73	.90	40.2	11.8	2.76	.59	.75	.92	38.6	11.3	3.12	.60	.77	.94	37.0	10.8	3.53	.61	.78	.96
	1550	730	42.2	12.4	2.45	.60	.76	.94	40.7	11.9	2.76	.60	.78	.96	39.1	11.5	3.13	.61	.80	.98	37.4	11.0	3.54	.63	.82	.99
71°F (22°C)	1250	590	43.9	12.9	2.46	.41	.55	.68	42.3	12.4	2.78	.42	.55	.69	40.7	11.9	3.14	.42	.56	.71	39.0	11.4	3.54	.42	.57	.72
	1400	660	44.5	13.0	2.47	.42	.56	.71	42.9	12.6	2.78	.42	.57	.72	41.2	12.1	3.14	.43	.58	.74	39.5	11.6	3.55	.43	.59	.76
	1550	730	44.9	13.2	2.47	.43	.58	.74	43.3	12.7	2.78	.43	.59	.75	41.7	12.2	3.15	.43	.60	.77	39.9	11.7	3.55	.44	.61	.80
13ACC-042 — CH33-42B-2F TXV and RFC COOLING CAPACITY																										
63°F (17°C)	1250	590	39.5	11.6	2.43	.72	.89	1.00	38.2	11.2	2.75	.73	.91	1.00	36.7	10.8	3.11	.75	.93	1.00	35.2	10.3	3.53	.77	.95	1.00
	1400	660	40.3	11.8	2.43	.75	.93	1.00	38.9	11.4	2.75	.77	.95	1.00	37.5	11.0	3.12	.79	.97	1.00	36.0	10.6	3.54	.81	.99	1.00
	1550	730	41.0	12.0	2.44	.78	.96	1.00	39.6	11.6	2.76	.80	.98	1.00	38.2	11.2	3.13	.82	.99	1.00	36.8	10.8	3.53	.84	1.00	1.00
67°F (19°C)	1250	590	42.0	12.3	2.44	.56	.70	.85	40.6	11.9	2.76	.57	.71	.87	39.0	11.4	3.13	.57	.73	.89	37.4	11.0	3.54	.58	.74	.91
	1400	660	42.6	12.5	2.45	.57	.73	.89	41.2	12.1	2.77	.58	.74	.92	39.6	11.6	3.13	.59	.76	.93	37.9	11.1	3.55	.60	.78	.96
	1550	730	43.2	12.7	2.45	.59	.76	.93	41.7	12.2	2.77	.60	.77	.95	40.0	11.7	3.14	.61	.80	.97	38.3	11.2	3.55	.62	.82	.99
71°F (22°C)	1250	590	44.9	13.2	2.47	.41	.54	.67	43.4	12.7	2.78	.41	.55	.69	41.7	12.2	3.15	.42	.56	.70	40.0	11.7	3.55	.42	.57	.72
	1400	660	45.6	13.4	2.47	.42	.56	.70	44.0	12.9	2.79	.42	.57	.72	42.3	12.4	3.15	.42	.58	.73	40.5	11.9	3.56	.43	.59	.75
	1550	730	46.1	13.5	2.48	.42	.58	.73	44.4	13.0	2.79	.43	.59	.75	42.7	12.5	3.15	.43	.60	.77	40.9	12.0	3.57	.43	.61	.79
13ACC-042 — CH33-44/48B-2F TXV and RFC COOLING CAPACITY																										
63°F (17°C)	1250	590	40.0	11.7	2.43	.72	.89	1.00	38.6	11.3	2.75	.73	.91	1.00	37.1	10.9	3.11	.75	.93	1.00	35.6	10.4	3.52	.77	.95	1.00
	1400	660	40.8	12.0	2.43	.75	.93	1.00	39.4	11.5	2.75	.77	.95	1.00	37.9	11.1	3.11	.78	.97	1.00	36.4	10.7	3.52	.81	.99	1.00
	1550	730	41.5	12.2	2.44	.79	.97	1.00	40.1	11.8	2.75	.80	.98	1.00	38.7	11.3	3.12	.82	.99	1.00	37.2	10.9	3.53	.84	1.00	1.00
67°F (19°C)	1250	590	42.6	12.5	2.45	.56	.70	.85	41.1	12.0	2.76	.56	.71	.87	39.5	11.6	3.12	.57	.72	.89	37.8	11.1	3.54	.58	.74	.91
	1400	660	43.2	12.7	2.45	.57	.73	.90	41.7	12.2	2.77	.58	.74	.92	40.0	11.7	3.13	.59	.76	.93	38.3	11.2	3.54	.60	.78	.96
	1550	730	43.8	12.8	2.46	.59	.76	.94	42.2	12.4	2.77	.60	.78	.95	40.6	11.9	3.13	.61	.79	.97	38.8	11.4	3.54	.62	.82	.99
71°F (22°C)	1250	590	45.6	13.4	2.47	.41	.54	.67	43.9	12.9	2.79	.41	.55	.69	42.2	12.4	3.15	.42	.56	.70	40.4	11.8	3.56	.42	.57	.72
	1400	660	46.2	13.5	2.48	.42	.56	.70	44.5	13.0	2.79	.42	.57	.72	42.8	12.5	3.15	.42	.58	.73	41.0	12.0	3.56	.43	.59	.75
	1550	730	46.7	13.7	2.48	.42	.58	.73	45.0	13.2	2.80	.43	.59	.75	43.3	12.7	3.16	.43	.60	.77	41.4	12.1	3.56	.44	.61	.79

NOTE - For Temperatures and Capacities not shown in tables, see bulletin - Cooling Unit Rating Table Correction Factor Data in Miscellaneous Engineering Data section.

Entering Wet Bulb Temperature	Total Air Volume		Outdoor Air Temperature Entering Outdoor Coil																							
			85°F (29°C)						95°F (35°C)						105°F (41°C)						115°F (46°C)					
			Total Cooling Capacity		Comp Motor kW Input	Sensible To Total Ratio (S/T) Dry Bulb			Total Cooling Capacity		Comp Motor kW Input	Sensible To Total Ratio (S/T) Dry Bulb			Total Cooling Capacity		Comp Motor kW Input	Sensible To Total Ratio (S/T) Dry Bulb			Total Cooling Capacity		Comp Motor kW Input	Sensible To Total Ratio (S/T) Dry Bulb		
	cfm	L/s	kBtuh	kW		75°F 24°C	80°F 27°C	85°F 29°C	kBtuh	kW		75°F 24°C	80°F 27°C	85°F 29°C	kBtuh	kW		75°F 24°C	80°F 27°C	85°F 29°C	kBtuh	kW		75°F 24°C	80°F 27°C	85°F 29°C
13ACC-042 — CH33-48C-2F TXV and RFC COOLING CAPACITY																										
63°F (17°C)	1250	590	39.9	11.7	2.44	.72	.89	1.00	38.5	11.3	2.76	.73	.91	1.00	37.1	10.9	3.12	.75	.93	1.00	35.6	10.4	3.53	.77	.95	1.00
	1400	660	40.7	11.9	2.44	.75	.93	1.00	39.3	11.5	2.76	.77	.95	1.00	37.9	11.1	3.12	.78	.97	1.00	36.3	10.6	3.54	.81	.99	1.00
	1550	730	41.5	12.2	2.45	.79	.97	1.00	40.1	11.8	2.77	.80	.98	1.00	38.6	11.3	3.13	.82	1.00	1.00	37.2	10.9	3.54	.84	1.00	1.00
67°F (19°C)	1250	590	42.6	12.5	2.46	.56	.70	.85	41.0	12.0	2.77	.56	.71	.87	39.4	11.5	3.14	.57	.72	.89	37.7	11.0	3.55	.58	.74	.92
	1400	660	43.2	12.7	2.46	.57	.73	.89	41.7	12.2	2.78	.58	.74	.92	40.0	11.7	3.14	.59	.76	.94	38.3	11.2	3.55	.60	.78	.96
	1550	730	43.8	12.8	2.47	.59	.76	.93	42.2	12.4	2.79	.60	.77	.95	40.5	11.9	3.15	.61	.80	.97	38.8	11.4	3.56	.62	.82	.99
71°F (22°C)	1250	590	45.5	13.3	2.48	.41	.54	.67	43.9	12.9	2.80	.41	.55	.69	42.2	12.4	3.16	.42	.56	.70	40.4	11.8	3.57	.42	.57	.72
	1400	660	46.2	13.5	2.49	.42	.56	.70	44.5	13.0	2.80	.42	.57	.72	42.8	12.5	3.16	.42	.58	.73	41.0	12.0	3.57	.43	.59	.75
	1550	730	46.7	13.7	2.50	.42	.58	.73	45.0	13.2	2.81	.43	.59	.75	43.2	12.7	3.17	.43	.60	.77	41.4	12.1	3.58	.44	.61	.79
13ACC-042 — CH33-50/60C-2F TXV and RFC COOLING CAPACITY																										
63°F (17°C)	1250	590	40.4	11.8	2.44	.72	.89	1.00	39.0	11.4	2.75	.73	.91	1.00	37.5	11.0	3.11	.75	.93	1.00	35.9	10.5	3.52	.77	.96	1.00
	1400	660	41.2	12.1	2.44	.75	.94	1.00	39.8	11.7	2.76	.77	.95	1.00	38.2	11.2	3.12	.78	.97	1.00	36.7	10.8	3.53	.81	.99	1.00
	1550	730	42.0	12.3	2.45	.79	.97	1.00	40.5	11.9	2.76	.80	.99	1.00	39.0	11.4	3.13	.82	1.00	1.00	37.6	11.0	3.54	.85	1.00	1.00
67°F (19°C)	1250	590	43.1	12.6	2.46	.56	.70	.85	41.5	12.2	2.77	.57	.71	.87	39.9	11.7	3.13	.57	.72	.89	38.1	11.2	3.54	.58	.74	.92
	1400	660	43.8	12.8	2.46	.57	.73	.90	42.2	12.4	2.78	.58	.74	.92	40.5	11.9	3.14	.59	.76	.94	38.7	11.3	3.55	.60	.78	.96
	1550	730	44.3	13.0	2.47	.59	.76	.94	42.7	12.5	2.78	.60	.78	.96	41.0	12.0	3.15	.61	.79	.98	39.2	11.5	3.55	.62	.82	.99
71°F (22°C)	1250	590	46.1	13.5	2.49	.41	.54	.67	44.5	13.0	2.80	.41	.55	.69	42.7	12.5	3.15	.42	.56	.70	40.9	12.0	3.57	.42	.57	.72
	1400	660	46.8	13.7	2.50	.42	.56	.70	45.1	13.2	2.81	.42	.57	.72	43.3	12.7	3.16	.42	.58	.73	41.4	12.1	3.58	.43	.59	.75
	1550	730	47.4	13.9	2.50	.42	.58	.73	45.7	13.4	2.81	.43	.59	.75	43.8	12.8	3.17	.43	.60	.77	41.9	12.3	3.58	.44	.61	.79
13ACC-042 — C33-44C TXV with G60UHV-60C COOLING CAPACITY																										
63°F (17°C)	1185	560	38.8	11.4	2.43	.71	.87	1.00	37.5	11.0	2.75	.72	.89	1.00	36.1	10.6	3.11	.74	.91	1.00	34.6	10.1	3.53	.75	.93	1.00
	1335	630	39.6	11.6	2.43	.74	.92	1.00	38.3	11.2	2.75	.75	.93	1.00	36.8	10.8	3.12	.77	.95	1.00	35.3	10.3	3.54	.79	.97	1.00
	1485	700	40.3	11.8	2.44	.77	.95	1.00	39.0	11.4	2.76	.79	.97	1.00	37.5	11.0	3.13	.81	.99	1.00	36.1	10.6	3.53	.83	1.00	1.00
67°F (19°C)	1185	560	41.4	12.1	2.44	.55	.69	.83	39.9	11.7	2.76	.56	.70	.85	38.4	11.3	3.13	.56	.71	.87	36.7	10.8	3.54	.57	.73	.90
	1335	630	42.0	12.3	2.45	.57	.71	.88	40.6	11.9	2.77	.57	.73	.90	39.0	11.4	3.13	.58	.75	.92	37.3	10.9	3.55	.59	.76	.94
	1485	700	42.6	12.5	2.46	.58	.75	.92	41.1	12.0	2.77	.59	.76	.94	39.5	11.6	3.14	.60	.78	.96	37.8	11.1	3.55	.61	.80	.98
71°F (22°C)	1185	560	44.2	13.0	2.47	.41	.54	.66	42.7	12.5	2.78	.41	.54	.67	41.1	12.0	3.15	.41	.55	.69	39.4	11.5	3.55	.42	.56	.70
	1335	630	44.9	13.2	2.47	.41	.55	.69	43.3	12.7	2.79	.42	.56	.70	41.7	12.2	3.15	.42	.57	.72	39.9	11.7	3.56	.42	.58	.74
	1485	700	45.5	13.3	2.48	.42	.57	.72	43.9	12.9	2.80	.43	.58	.73	42.2	12.4	3.15	.43	.59	.75	40.4	11.8	3.57	.43	.60	.78
13ACC-042 — C33-48C TXV with G60UHV-60C COOLING CAPACITY																										
63°F (17°C)	1185	560	38.9	11.4	2.43	.71	.87	1.00	37.5	11.0	2.75	.72	.89	1.00	36.1	10.6	3.11	.74	.91	1.00	34.6	10.1	3.53	.75	.93	1.00
	1335	630	39.7	11.6	2.43	.74	.92	1.00	38.3	11.2	2.75	.75	.93	1.00	36.9	10.8	3.12	.77	.95	1.00	35.4	10.4	3.54	.79	.97	1.00
	1485	700	40.4	11.8	2.44	.77	.95	1.00	39.0	11.4	2.76	.79	.97	1.00	37.6	11.0	3.13	.81	.98	1.00	36.2	10.6	3.53	.83	1.00	1.00
67°F (19°C)	1185	560	41.5	12.2	2.44	.55	.69	.83	40.0	11.7	2.76	.56	.70	.85	38.4	11.3	3.13	.57	.71	.87	36.8	10.8	3.54	.57	.73	.89
	1335	630	42.1	12.3	2.45	.57	.72	.88	40.6	11.9	2.77	.57	.73	.90	39.1	11.5	3.13	.58	.74	.92	37.4	11.0	3.55	.59	.77	.94
	1485	700	42.7	12.5	2.46	.58	.75	.92	41.2	12.1	2.77	.59	.76	.94	39.6	11.6	3.14	.60	.78	.96	37.9	11.1	3.55	.61	.80	.98
71°F (22°C)	1185	560	44.3	13.0	2.47	.41	.54	.66	42.8	12.5	2.78	.41	.54	.67	41.2	12.1	3.15	.41	.55	.69	39.4	11.5	3.55	.42	.56	.70
	1335	630	45.0	13.2	2.47	.41	.55	.69	43.4	12.7	2.79	.42	.56	.70	41.8	12.3	3.15	.42	.57	.72	40.0	11.7	3.56	.43	.58	.74
	1485	700	45.6	13.4	2.48	.42	.57	.72	43.9	12.9	2.80	.42	.58	.74	42.2	12.4	3.15	.43	.59	.76	40.4	11.8	3.57	.43	.60	.77
13ACC-042 — C33-50/60C TXV with G60UHV-60C COOLING CAPACITY																										
63°F (17°C)	1185	560	39.3	11.5	2.42	.71	.88	1.00	38.0	11.1	2.74	.72	.89	1.00	36.5	10.7	3.11	.74	.91	1.00	35.0	10.3	3.52	.75	.93	1.00
	1335	630	40.2	11.8	2.43	.74	.91	1.00	38.8	11.4	2.75	.76	.93	1.00	37.3	10.9	3.11	.77	.95	1.00	35.8	10.5	3.52	.79	.97	1.00
	1485	700	40.9	12.0	2.44	.77	.95	1.00	39.5	11.6	2.75	.79	.97	1.00	38.1	11.2	3.12	.81	.99	1.00	36.6	10.7	3.52	.83	1.00	1.00
67°F (19°C)	1185	560	42.0	12.3	2.44	.55	.69	.83	40.5	11.9	2.76	.56	.70	.85	38.9	11.4	3.12	.56	.71	.87	37.2	10.9	3.53	.57	.73	.89
	1335	630	42.7	12.5	2.45	.57	.71	.88	41.1	12.0	2.77	.58	.73	.90	39.5	11.6	3.13	.58	.75	.92	37.8	11.1	3.54	.59	.76	.94
	1485	700	43.3	12.7	2.45	.58	.74	.92	41.7	12.2	2.77	.59	.76	.94	40.1	11.8	3.13	.60	.78	.96	38.3	11.2	3.54	.61	.80	.98
71°F (22°C)	1185	560	44.9	13.2	2.47	.41	.54	.66	43.3	12.7	2.78	.41	.54	.67	41.7	12.2	3.14	.41	.55	.69	39.9	11.7	3.55	.42	.56	.70
	1335	630	45.6	13.4	2.48	.41	.55	.69	44.0	12.9	2.79	.42	.56	.70	42.3	12.4	3.15	.42	.57	.72	40.5	11.9	3.56	.42	.58	.74
	1485	700	46.2	13.5	2.48	.42	.57	.72	44.5	13.0	2.80	.42	.58	.73	42.8	12.5	3.16	.43	.59	.75	41.0	12.0	3.56	.43	.60	.78
13ACC-042 — CR26-36N-F TXV with G60DFV-36A-070 COOLING CAPACITY																										
63°F (17°C)	1250	590	38.3	11.2	2.42	.73	.90	1.00	37.0	10.8	2.74	.74	.92	1.00	35.6	10.4	3.11	.76	.94	1.00	34.2	10.0	3.52	.78	.96	1.00
	1400	660	39.0	11.4	2.43	.76	.94	1.00	37.7	11.0	2.75	.78	.96	1.00	36.4	10.7	3.11	.80	.98	1.00	34.9	10.2	3.52	.82	.99	1.00
	1550	730	39.7	11.6	2.43	.80	.98	1.00	38.4	11.3	2.75	.81	.99	1.00	37.1	10.9	3.12	.83	1.00	1.00	35.7	10.5	3.52	.85	1.00	1.00
67°F (19°C)	1250	590	40.6	11.9	2.44	.56	.71	.86	39.2	11.5	2.76	.57	.72	.88	37.7	11.0	3.12	.58	.73	.90	36.1	10.6	3.53	.59	.75	.93
	1400	660	41.2	12.1	2.44	.58	.74	.91	39.8	11.7	2.76	.59	.75	.93	38.2	11.2	3.12	.60	.77	.95	36.6	10.7	3.54	.61	.79	.97
	1550	730	41.7	12.2	2.45	.60	.77	.94	40.2	11.8	2.76	.60	.79	.96	38.7	11.3	3.13	.62	.80	.98	37.0	10.8	3.54	.63	.83	.99
71°F (22°C)	1250	590	43.4	12.7	2.46	.41	.55	.69	41.9	12.3	2.78	.41	.56	.70	40.3	11.8	3.14	.42	.57	.71	38.6	11.3	3.54	.42	.58	.73
	1400	660	43.9	12.9	2.47	.42	.57	.72	42.4	12.4	2.78	.42	.58	.73	40.8	12.0	3.14	.43	.58	.75	39.0	11.4	3.55	.43	.60	.76
	1550	730	44.4	13.0	2.47	.43	.59	.74	42.8	12.5	2.79	.43	.60	.76	41.2	12.1	3.15	.43	.61	.78	39.4	11.5	3.56	.44	.62	.80
13ACC-042 — CR26-36W-F TXV with G60DFV-36B-090 or G60DFV-60C COOLING CAPACITY																										
63°F (17°C)	1200	565	37.7	11.0	2.42	.72	.89	1.00	36.4	10.7	2.74	.73	.91	1.00	35.0	10.3	3.10	.75	.93	1.00	33.6	9.8	3.52	.76	.95	1.00
	1350	635	38.4	11.3	2.43	.75	.93	1.00	37.2	10.9	2.75	.76	.94	1.00	35.8	10.5	3.11	.78	.97	1.00	34.3	10.1	3.53	.81	.99	1.00
	1500	710	39.1	11.5	2.43	.78	.97	1.00	37.8	11.1	2.75	.80	.98	1.00	36.5	10.7	3.12	.82	.99	1.00	35.1	10.3	3.52	.85	1.00	1.00
67°F (19°C)	1200	565	40.0	11.7	2.44	.56	.70	.85	38.6	11.3	2.75	.57	.71	.87	37.1	10.9	3.12	.57	.72	.89	35.6	10.4	3.53	.58	.74	.91
	1350	635	40.6	11.9	2.44	.58	.73	.89	39.2	11.5	2.76	.58	.74	.91	37.7	11.0	3.12	.59	.76	.94	36.1	10.6	3.53	.60	.78	.96
	1500	710	41.1	12.0	2.45	.59	.76	.94	39.7	11.6	2.76	.60	.78	.95	38.1	11.2	3.13	.61	.80	.97	36.5	10.7	3.54	.62	.82	.99
71°F (22°C)	1200	565	42.7	12.5	2.46	.41	.54	.67	41.3	12.1	2.77	.41	.55	.69	39.7	11.6	3.14	.42	.56	.70	38.0	11.1	3.55	.42	.57	.72
	1350	635	43.3	12.7	2.46	.42	.56	.71	41.8	12.3	2.78	.42	.57	.72	40.2	11.8	3.14	.42	.58	.73	38.5	11.3	3.55	.43	.59	.75
	1500	710	43.8	12.8	2.47	.43	.58	.74	42.3	12.4	2.78	.43	.59	.75	40.7	11.9	3.15	.43	.60	.77	38.9	11.4	3.55	.44	.61	.79

NOTE - For Temperatures and Capacities not shown in tables, see bulletin - Cooling Unit Rating Table Correction Factor Data in Miscellaneous Engineering Data section.

Entering Wet Bulb Temperature	Total Air Volume		Outdoor Air Temperature Entering Outdoor Coil																							
			85°F (29°C)						95°F (35°C)						105°F (41°C)						115°F (46°C)					
			Total Cooling Capacity		Comp Motor kW Input	Sensible To Total Ratio (S/T) Dry Bulb			Total Cooling Capacity		Comp Motor kW Input	Sensible To Total Ratio (S/T) Dry Bulb			Total Cooling Capacity		Comp Motor kW Input	Sensible To Total Ratio (S/T) Dry Bulb			Total Cooling Capacity		Comp Motor kW Input	Sensible To Total Ratio (S/T) Dry Bulb		
	cfm	L/s	kBtuh	kW		75°F 24°C	80°F 27°C	85°F 29°C	kBtuh	kW		75°F 24°C	80°F 27°C	85°F 29°C	kBtuh	kW		75°F 24°C	80°F 27°C	85°F 29°C	kBtuh	kW		75°F 24°C	80°F 27°C	85°F 29°C
13ACC-042 — CR26-48N-F TXV with G60DFV-36B-090 or G60DFV-60C COOLING CAPACITY																										
63°F (17°C)	1220	575	39.1	11.5	2.43	.72	.88	1.00	37.7	11.0	2.75	.73	.90	1.00	36.3	10.6	3.12	.74	.92	1.00	34.8	10.2	3.53	.76	.94	1.00
	1370	645	39.9	11.7	2.44	.74	.92	1.00	38.5	11.3	2.76	.76	.94	1.00	37.0	10.8	3.12	.78	.96	1.00	35.6	10.4	3.53	.80	.98	1.00
	1520	715	40.6	11.9	2.44	.77	.96	1.00	39.2	11.5	2.76	.79	.97	1.00	37.8	11.1	3.12	.81	.99	1.00	36.3	10.6	3.53	.83	1.00	1.00
67°F (19°C)	1220	575	41.7	12.2	2.45	.55	.69	.84	40.2	11.8	2.77	.56	.70	.86	38.7	11.3	3.13	.57	.71	.88	37.0	10.8	3.54	.58	.73	.90
	1370	645	42.3	12.4	2.46	.57	.72	.88	40.8	12.0	2.77	.58	.73	.90	39.2	11.5	3.14	.59	.75	.92	37.5	11.0	3.55	.60	.77	.95
	1520	715	42.9	12.6	2.46	.58	.75	.92	41.3	12.1	2.78	.59	.77	.94	39.7	11.6	3.14	.60	.78	.96	38.0	11.1	3.55	.61	.81	.98
71°F (22°C)	1220	575	44.6	13.1	2.47	.41	.54	.67	43.0	12.6	2.79	.41	.55	.68	41.4	12.1	3.15	.41	.55	.69	39.6	11.6	3.56	.42	.56	.71
	1370	645	45.2	13.2	2.48	.42	.55	.70	43.7	12.8	2.80	.42	.56	.71	41.9	12.3	3.16	.42	.57	.72	40.2	11.8	3.57	.43	.58	.74
	1520	715	45.8	13.4	2.49	.42	.57	.72	44.1	12.9	2.80	.42	.58	.74	42.4	12.4	3.16	.43	.59	.76	40.6	11.9	3.57	.43	.60	.78
13ACC-042 — CH23-41 TXV with G60UHV-60C/D COOLING CAPACITY																										
63°F (17°C)	1185	560	38.5	11.3	2.42	.72	.89	1.00	37.3	10.9	2.74	.73	.90	1.00	35.9	10.5	3.11	.75	.92	1.00	34.4	10.1	3.53	.76	.94	1.00
	1335	630	39.3	11.5	2.43	.75	.93	1.00	38.0	11.1	2.75	.77	.95	1.00	36.6	10.7	3.12	.78	.96	1.00	35.2	10.3	3.53	.80	.98	1.00
	1485	700	40.1	11.8	2.44	.79	.96	1.00	38.8	11.4	2.76	.80	.98	1.00	37.4	11.0	3.12	.82	.99	1.00	36.0	10.6	3.53	.84	1.00	1.00
67°F (19°C)	1185	560	40.9	12.0	2.44	.56	.70	.85	39.5	11.6	2.76	.57	.71	.86	38.0	11.1	3.12	.57	.72	.89	36.4	10.7	3.53	.58	.74	.91
	1335	630	41.6	12.2	2.44	.57	.73	.89	40.1	11.8	2.76	.58	.74	.91	38.6	11.3	3.12	.59	.76	.93	37.0	10.8	3.54	.60	.78	.95
	1485	700	42.1	12.3	2.45	.59	.76	.93	40.6	11.9	2.77	.60	.78	.95	39.1	11.5	3.13	.61	.79	.97	37.4	11.0	3.55	.62	.82	.98
71°F (22°C)	1185	560	43.7	12.8	2.46	.41	.54	.67	42.2	12.4	2.78	.41	.55	.68	40.6	11.9	3.14	.42	.56	.70	39.0	11.4	3.55	.42	.57	.71
	1335	630	44.4	13.0	2.47	.42	.56	.71	42.8	12.5	2.78	.42	.57	.72	41.2	12.1	3.15	.42	.58	.73	39.5	11.6	3.56	.43	.59	.75
	1485	700	44.9	13.2	2.47	.42	.58	.73	43.3	12.7	2.79	.43	.59	.75	41.6	12.2	3.15	.43	.60	.77	39.9	11.7	3.56	.44	.61	.79
13ACC-042 — CH23-51 TXV with G60UHV-60C/D COOLING CAPACITY																										
63°F (17°C)	1185	560	38.5	11.3	2.42	.71	.88	1.00	37.1	10.9	2.74	.73	.90	1.00	35.8	10.5	3.10	.74	.92	1.00	34.3	10.1	3.52	.76	.94	1.00
	1335	630	39.3	11.5	2.42	.75	.92	1.00	37.9	11.1	2.74	.76	.94	1.00	36.5	10.7	3.11	.78	.96	1.00	35.1	10.3	3.52	.80	.98	1.00
	1485	700	40.0	11.7	2.43	.78	.96	1.00	38.7	11.3	2.75	.79	.97	1.00	37.3	10.9	3.11	.81	.99	1.00	35.9	10.5	3.52	.83	1.00	1.00
67°F (19°C)	1185	560	40.9	12.0	2.43	.56	.69	.84	39.5	11.6	2.75	.56	.70	.86	38.0	11.1	3.11	.57	.72	.88	36.4	10.7	3.52	.58	.73	.90
	1335	630	41.6	12.2	2.44	.57	.72	.89	40.1	11.8	2.76	.58	.73	.90	38.6	11.3	3.12	.59	.75	.93	36.9	10.8	3.53	.60	.77	.95
	1485	700	42.1	12.3	2.44	.59	.75	.93	40.7	11.9	2.76	.60	.77	.94	39.1	11.5	3.12	.61	.79	.96	37.4	11.0	3.53	.62	.81	.98
71°F (22°C)	1185	560	43.8	12.8	2.46	.41	.54	.67	42.3	12.4	2.77	.41	.55	.68	40.7	11.9	3.13	.41	.55	.69	39.0	11.4	3.54	.42	.56	.71
	1335	630	44.4	13.0	2.46	.42	.56	.70	42.9	12.6	2.78	.42	.56	.71	41.2	12.1	3.14	.42	.57	.73	39.5	11.6	3.55	.43	.58	.74
	1485	700	45.0	13.2	2.47	.42	.57	.73	43.4	12.7	2.78	.42	.58	.74	41.7	12.2	3.14	.43	.59	.76	39.9	11.7	3.55	.43	.61	.78
13ACC-042 — CH33-48C-2F TXV with G60UHV-60C COOLING CAPACITY																										
63°F (17°C)	1185	560	39.3	11.5	2.42	.71	.87	1.00	37.9	11.1	2.74	.72	.89	1.00	36.4	10.7	3.11	.74	.91	1.00	34.9	10.2	3.52	.75	.93	1.00
	1335	630	40.1	11.8	2.43	.74	.92	1.00	38.7	11.3	2.75	.75	.93	1.00	37.3	10.9	3.11	.77	.95	1.00	35.7	10.5	3.52	.79	.98	1.00
	1485	700	40.8	12.0	2.44	.77	.96	1.00	39.4	11.5	2.75	.79	.97	1.00	38.0	11.1	3.12	.81	.99	1.00	36.5	10.7	3.52	.83	1.00	1.00
67°F (19°C)	1185	560	41.9	12.3	2.44	.55	.69	.83	40.4	11.8	2.76	.56	.70	.85	38.8	11.4	3.12	.57	.71	.87	37.2	10.9	3.53	.57	.73	.90
	1335	630	42.6	12.5	2.45	.57	.71	.88	41.1	12.0	2.77	.57	.73	.90	39.5	11.6	3.13	.58	.74	.92	37.8	11.1	3.54	.59	.76	.94
	1485	700	43.2	12.7	2.45	.58	.75	.92	41.6	12.2	2.77	.59	.76	.94	40.0	11.7	3.13	.60	.78	.96	38.3	11.2	3.54	.61	.80	.98
71°F (22°C)	1185	560	44.8	13.1	2.47	.41	.53	.66	43.3	12.7	2.78	.41	.54	.67	41.6	12.2	3.14	.41	.55	.69	39.8	11.7	3.55	.42	.56	.70
	1335	630	45.6	13.4	2.48	.41	.55	.69	43.9	12.9	2.79	.42	.56	.70	42.2	12.4	3.15	.42	.57	.72	40.4	11.8	3.56	.42	.58	.74
	1485	700	46.1	13.5	2.48	.42	.57	.72	44.5	13.0	2.80	.42	.58	.74	42.7	12.5	3.16	.43	.59	.75	40.9	12.0	3.56	.43	.60	.77
13ACC-042 — CH33-50/60C-2F TXV with G60UHV-60C COOLING CAPACITY																										
63°F (17°C)	1185	560	39.7	11.6	2.43	.71	.87	1.00	38.3	11.2	2.75	.72	.89	1.00	36.8	10.8	3.12	.74	.92	1.00	35.3	10.3	3.53	.75	.94	1.00
	1335	630	40.6	11.9	2.44	.74	.92	1.00	39.2	11.5	2.76	.76	.94	1.00	37.7	11.0	3.12	.77	.96	1.00	36.1	10.6	3.53	.79	.98	1.00
	1485	700	41.4	12.1	2.45	.77	.96	1.00	39.9	11.7	2.76	.79	.98	1.00	38.4	11.3	3.13	.81	.99	1.00	36.9	10.8	3.54	.83	1.00	1.00
67°F (19°C)	1185	560	42.5	12.5	2.45	.55	.68	.83	40.9	12.0	2.77	.56	.70	.85	39.3	11.5	3.13	.57	.71	.87	37.6	11.0	3.54	.57	.73	.90
	1335	630	43.2	12.7	2.46	.57	.71	.88	41.6	12.2	2.78	.58	.73	.90	40.0	11.7	3.14	.58	.74	.92	38.2	11.2	3.55	.59	.76	.94
	1485	700	43.8	12.8	2.47	.58	.74	.92	42.2	12.4	2.78	.59	.76	.94	40.5	11.9	3.15	.60	.78	.96	38.7	11.3	3.55	.61	.81	.98
71°F (22°C)	1185	560	45.5	13.3	2.48	.41	.53	.66	43.8	12.8	2.80	.41	.54	.67	42.1	12.3	3.16	.41	.55	.69	40.3	11.8	3.57	.42	.56	.70
	1335	630	46.2	13.5	2.49	.41	.55	.69	44.5	13.0	2.80	.42	.56	.70	42.8	12.5	3.16	.42	.57	.72	40.9	12.0	3.57	.42	.58	.74
	1485	700	46.8	13.7	2.50	.42	.57	.72	45.1	13.2	2.81	.42	.58	.73	43.3	12.7	3.17	.43	.59	.75	41.4	12.1	3.58	.43	.60	.77
13ACC-042 — CB28UH-036 - CB29M-41 TXV COOLING CAPACITY																										
63°F (17°C)	1250	590	39.6	11.6	2.43	.73	.90	1.00	38.2	11.2	2.75	.74	.92	1.00	36.8	10.8	3.11	.76	.94	1.00	35.3	10.3	3.52	.78	.96	1.00
	1400	660	40.3	11.8	2.44	.76	.95	1.00	39.0	11.4	2.75	.78	.96	1.00	37.5	11.0	3.12	.80	.98	1.00	36.1	10.6	3.53	.82	.99	1.00
	1550	730	41.1	12.0	2.44	.79	.98	1.00	39.8	11.7	2.76	.81	.99	1.00	38.3	11.2	3.12	.83	1.00	1.00	36.9	10.8	3.53	.85	1.00	1.00
67°F (19°C)	1250	590	42.0	12.3	2.45	.56	.71	.86	40.5	11.9	2.76	.57	.72	.88	39.0	11.4	3.13	.58	.73	.90	37.3	10.9	3.54	.59	.75	.93
	1400	660	42.7	12.5	2.45	.58	.73	.91	41.1	12.0	2.77	.59	.75	.93	39.5	11.6	3.14	.60	.77	.95	37.8	11.1	3.54	.61	.79	.97
	1550	730	43.2	12.7	2.46	.60	.77	.94	41.6	12.2	2.78	.61	.79	.97	40.0	11.7	3.14	.62	.81	.98	38.3	11.2	3.55	.63	.83	1.00
71°F (22°C)	1250	590	44.9	13.2	2.48	.41	.55	.68	43.3	12.7	2.79	.41	.56	.70	41.7	12.2	3.15	.42	.56	.71	39.9	11.7	3.56	.42	.57	.73
	1400	660	45.5	13.3	2.48	.42	.57	.71	43.9	12.9	2.80	.42	.58	.73	42.2	12.4	3.15	.43	.59	.74	40.4	11.8	3.56	.43	.60	.76
	1550	730	46.0	13.5	2.49	.43	.59	.74	44.4	13.0	2.80	.43	.59	.76	42.6	12.5	3.16	.43	.61	.78	40.8	12.0	3.57	.44	.62	.80
13ACC-042 — CB28UH-042 - CB29M-46 TXV COOLING CAPACITY																										
63°F (17°C)	1250	590	38.3	11.2	2.42	.73	.90	1.00	37.0	10.8	2.74	.74	.92	1.00	35.6	10.4	3.11	.76	.94	1.00	34.2	10.0	3.52	.78	.96	1.00
	1400	660	39.1	11.5	2.43	.76	.94	1.00	37.8	11.1	2.75	.78	.96	1.00	36.4	10.7	3.11	.79	.98	1.00	35.0	10.3	3.52	.82	.99	1.00
	1550	730	39.8	11.7	2.44	.79	.98	1.00	38.5	11.3	2.75	.81	.99	1.00	37.1	10.9	3.11	.83	1.00	1.00	35.8	10.5	3.53	.85	1.00	1.00
67°F (19°C)	1250	590	40.7	11.9	2.44	.56	.71	.86	39.3	11.5	2.76	.57	.72	.88	37.7	11.0	3.12	.58	.73	.90	36.1	10.6	3.53	.59	.75	.93
	1400	660	41.3	12.1	2.45	.58	.74	.91	39.8	11.7	2.76	.59	.75	.92	38.3	11.2	3.12	.60	.77	.95	36.6	10.7	3.54	.61	.79	.97
	1550	730	41.8	12.3	2.45	.60	.77	.95	40.3	11.8	2.77	.61	.79	.96	38.7	11.3	3.13	.62	.81	.98	37.1	10.9	3.54	.63	.83	.99
71°F (22°C)	1250	590	43.5	12.7	2.46	.41	.55	.68	42.0	12.3	2.78	.41	.56	.70	40.3	11.8	3.14	.42	.57	.71	38.6	11.3	3.55	.42	.58	.73
	1400	660	44.0	12.9	2.47	.42	.57	.71	42.5	12.5	2.78	.42	.57	.73	40.8	12.0	3.14	.43	.59	.74	39.1	11.5	3.55	.43	.60	.76
	1550	730	44.5	13.0	2.48	.43	.58	.74	42.9	12.6	2.79	.43	.60	.76	41.3	12.1	3.15	.43	.60	.78	39.5	11.6	3.56	.44	.62	.80

NOTE - For Temperatures and Capacities not shown in tables, see bulletin - Cooling Unit Rating Table Correction Factor Data in Miscellaneous Engineering Data section.

Entering Wet Bulb Temperature	Total Air Volume		Outdoor Air Temperature Entering Outdoor Coil																							
			85°F (29°C)						95°F (35°C)						105°F (41°C)						115°F (46°C)					
			Total Cooling Capacity		Comp Motor kW Input	Sensible To Total Ratio (S/T) Dry Bulb			Total Cooling Capacity		Comp Motor kW Input	Sensible To Total Ratio (S/T) Dry Bulb			Total Cooling Capacity		Comp Motor kW Input	Sensible To Total Ratio (S/T) Dry Bulb			Total Cooling Capacity		Comp Motor kW Input	Sensible To Total Ratio (S/T) Dry Bulb		
	cfm	L/s	kBtuh	kW		75°F 24°C	80°F 27°C	85°F 29°C	kBtuh	kW		75°F 24°C	80°F 27°C	85°F 29°C	kBtuh	kW		75°F 24°C	80°F 27°C	85°F 29°C	kBtuh	kW		75°F 24°C	80°F 27°C	85°F 29°C
13ACC-042 — CB30M-41 TXV COOLING CAPACITY																										
63°F (17°C)	1250	590	38.5	11.3	2.42	.73	.90	1.00	37.2	10.9	2.74	.74	.92	1.00	35.8	10.5	3.10	.76	.94	1.00	34.3	10.1	3.50	.78	.96	1.00
	1400	660	39.3	11.5	2.43	.76	.94	1.00	38.0	11.1	2.74	.78	.96	1.00	36.6	10.7	3.10	.80	.98	1.00	35.1	10.3	3.51	.81	1.00	1.00
	1550	730	40.0	11.7	2.43	.80	.98	1.00	38.7	11.3	2.75	.81	.99	1.00	37.3	10.9	3.10	.83	1.00	1.00	36.0	10.6	3.51	.85	1.00	1.00
67°F (19°C)	1250	590	40.9	12.0	2.44	.56	.71	.86	39.5	11.6	2.75	.57	.72	.88	37.9	11.1	3.11	.58	.73	.90	36.3	10.6	3.52	.59	.75	.93
	1400	660	41.5	12.2	2.44	.58	.74	.91	40.0	11.7	2.76	.59	.75	.92	38.5	11.3	3.12	.60	.77	.95	36.8	10.8	3.52	.61	.79	.97
	1550	730	42.0	12.3	2.45	.60	.77	.95	40.5	11.9	2.76	.61	.79	.96	39.0	11.4	3.12	.62	.80	.98	37.3	10.9	3.53	.63	.83	1.00
71°F (22°C)	1250	590	43.7	12.8	2.46	.41	.55	.68	42.2	12.4	2.78	.41	.56	.70	40.6	11.9	3.13	.42	.56	.71	38.8	11.4	3.54	.42	.58	.73
	1400	660	44.3	13.0	2.47	.42	.57	.71	42.7	12.5	2.78	.42	.58	.73	41.1	12.0	3.14	.43	.58	.74	39.3	11.5	3.54	.43	.60	.76
	1550	730	44.8	13.1	2.47	.43	.59	.74	43.2	12.7	2.79	.43	.60	.76	41.5	12.2	3.14	.43	.61	.78	39.7	11.6	3.55	.44	.62	.80
13ACC-042 — CB31MV-41 TXV COOLING CAPACITY																										
63°F (17°C)	1250	590	38.3	11.2	2.42	.73	.90	1.00	37.0	10.8	2.74	.74	.92	1.00	35.6	10.4	3.10	.76	.94	1.00	34.1	10.0	3.50	.78	.96	1.00
	1400	660	39.0	11.4	2.43	.76	.94	1.00	37.7	11.0	2.74	.78	.96	1.00	36.3	10.6	3.10	.80	.98	1.00	34.9	10.2	3.51	.81	.99	1.00
	1550	730	39.8	11.7	2.43	.80	.98	1.00	38.5	11.3	2.75	.81	.99	1.00	37.1	10.9	3.10	.83	1.00	1.00	35.7	10.5	3.51	.85	1.00	1.00
67°F (19°C)	1250	590	40.7	11.9	2.44	.56	.70	.86	39.2	11.5	2.75	.57	.72	.88	37.7	11.0	3.11	.58	.73	.90	36.1	10.6	3.52	.59	.75	.93
	1400	660	41.3	12.1	2.44	.58	.74	.91	39.8	11.7	2.76	.59	.75	.93	38.2	11.2	3.12	.60	.77	.95	36.6	10.7	3.52	.61	.79	.97
	1550	730	41.8	12.3	2.45	.60	.77	.95	40.3	11.8	2.76	.61	.79	.96	38.7	11.3	3.12	.62	.80	.98	37.1	10.9	3.53	.63	.83	1.00
71°F (22°C)	1250	590	43.5	12.7	2.46	.41	.55	.68	41.9	12.3	2.78	.41	.56	.70	40.3	11.8	3.13	.42	.56	.71	38.6	11.3	3.54	.42	.57	.73
	1400	660	44.1	12.9	2.47	.42	.57	.71	42.5	12.5	2.78	.42	.57	.73	40.8	12.0	3.14	.43	.58	.74	39.1	11.5	3.54	.43	.60	.76
	1550	730	44.5	13.0	2.47	.43	.58	.74	42.9	12.6	2.79	.43	.60	.76	41.3	12.1	3.14	.43	.60	.78	39.5	11.6	3.55	.44	.62	.80
13ACC-042 — CB30M-46 - CB30U-41/46 TXV COOLING CAPACITY																										
63°F (17°C)	1250	590	38.5	11.3	2.42	.73	.90	1.00	37.2	10.9	2.74	.74	.92	1.00	35.8	10.5	3.10	.75	.94	1.00	34.3	10.1	3.50	.78	.96	1.00
	1400	660	39.2	11.5	2.43	.76	.94	1.00	37.9	11.1	2.74	.78	.96	1.00	36.5	10.7	3.10	.79	.98	1.00	35.1	10.3	3.51	.82	.99	1.00
	1550	730	40.0	11.7	2.43	.79	.98	1.00	38.7	11.3	2.75	.81	.99	1.00	37.3	10.9	3.10	.83	1.00	1.00	35.9	10.5	3.51	.85	1.00	1.00
67°F (19°C)	1250	590	40.9	12.0	2.44	.56	.71	.86	39.4	11.5	2.75	.57	.72	.88	37.9	11.1	3.11	.58	.73	.90	36.3	10.6	3.52	.59	.75	.93
	1400	660	41.5	12.2	2.44	.58	.73	.91	40.0	11.7	2.76	.59	.75	.93	38.4	11.3	3.12	.60	.77	.95	36.8	10.8	3.52	.61	.79	.97
	1550	730	42.0	12.3	2.45	.60	.77	.95	40.5	11.9	2.76	.61	.78	.96	38.9	11.4	3.12	.62	.81	.98	37.2	10.9	3.53	.63	.83	1.00
71°F (22°C)	1250	590	43.7	12.8	2.46	.41	.55	.68	42.2	12.4	2.78	.41	.55	.69	40.5	11.9	3.13	.42	.57	.71	38.8	11.4	3.54	.42	.58	.72
	1400	660	44.3	13.0	2.47	.42	.57	.71	42.7	12.5	2.78	.42	.57	.73	41.0	12.0	3.14	.43	.59	.74	39.3	11.5	3.54	.43	.60	.76
	1550	730	44.8	13.1	2.47	.43	.59	.74	43.2	12.7	2.79	.43	.59	.76	41.5	12.2	3.14	.43	.60	.78	39.7	11.6	3.55	.44	.62	.80
13ACC-042 — CB28UH-048 - CB29M-51 TXV COOLING CAPACITY																										
63°F (17°C)	1250	590	39.6	11.6	2.43	.73	.90	1.00	38.2	11.2	2.75	.74	.92	1.00	36.8	10.8	3.11	.76	.94	1.00	35.3	10.3	3.52	.78	.96	1.00
	1400	660	40.3	11.8	2.44	.76	.95	1.00	39.0	11.4	2.75	.78	.96	1.00	37.5	11.0	3.12	.80	.98	1.00	36.1	10.6	3.53	.82	.99	1.00
	1550	730	41.1	12.0	2.44	.79	.98	1.00	39.8	11.7	2.76	.81	.99	1.00	38.3	11.2	3.12	.83	1.00	1.00	36.9	10.8	3.53	.85	1.00	1.00
67°F (19°C)	1250	590	42.0	12.3	2.45	.56	.71	.86	40.5	11.9	2.76	.57	.72	.88	39.0	11.4	3.13	.58	.73	.90	37.3	10.9	3.54	.59	.75	.93
	1400	660	42.7	12.5	2.45	.58	.73	.91	41.1	12.0	2.77	.59	.75	.93	39.5	11.6	3.14	.60	.77	.95	37.8	11.1	3.54	.61	.79	.97
	1550	730	43.2	12.7	2.46	.60	.77	.94	41.6	12.2	2.78	.61	.79	.97	40.0	11.7	3.14	.62	.81	.98	38.3	11.2	3.55	.63	.83	1.00
71°F (22°C)	1250	590	44.9	13.2	2.48	.41	.55	.68	43.3	12.7	2.79	.41	.56	.70	41.7	12.2	3.15	.42	.56	.71	39.9	11.7	3.56	.42	.57	.73
	1400	660	45.5	13.3	2.48	.42	.57	.71	43.9	12.9	2.80	.42	.58	.73	42.2	12.4	3.15	.43	.59	.74	40.4	11.8	3.56	.43	.60	.76
	1550	730	46.0	13.5	2.49	.43	.59	.74	44.4	13.0	2.80	.43	.59	.76	42.6	12.5	3.16	.43	.61	.78	40.8	12.0	3.57	.44	.62	.80
13ACC-042 — CB30M-51 - CB30U-51 TXV COOLING CAPACITY																										
63°F (17°C)	1250	590	40.2	11.8	2.43	.73	.90	1.00	38.8	11.4	2.75	.74	.92	1.00	37.2	10.9	3.11	.76	.94	1.00	35.6	10.4	3.52	.78	.97	1.00
	1400	660	41.0	12.0	2.44	.76	.94	1.00	39.5	11.6	2.76	.77	.97	1.00	38.0	11.1	3.12	.79	.98	1.00	36.5	10.7	3.52	.82	1.00	1.00
	1550	730	41.8	12.3	2.45	.79	.98	1.00	40.4	11.8	2.76	.81	.99	1.00	38.9	11.4	3.12	.83	1.00	1.00	37.5	11.0	3.53	.86	1.00	1.00
67°F (19°C)	1250	590	42.8	12.5	2.46	.56	.70	.86	41.3	12.1	2.77	.57	.72	.88	39.6	11.6	3.13	.58	.73	.90	37.9	11.1	3.54	.59	.75	.93
	1400	660	43.5	12.7	2.46	.58	.73	.91	41.9	12.3	2.78	.58	.75	.93	40.2	11.8	3.13	.60	.77	.95	38.4	11.3	3.54	.61	.79	.97
	1550	730	44.1	12.9	2.47	.60	.77	.95	42.4	12.4	2.78	.60	.79	.97	40.7	11.9	3.14	.62	.81	.99	38.9	11.4	3.55	.63	.83	1.00
71°F (22°C)	1250	590	45.8	13.4	2.49	.41	.55	.68	44.2	13.0	2.80	.41	.55	.69	42.4	12.4	3.15	.42	.56	.71	40.5	11.9	3.56	.42	.57	.72
	1400	660	46.5	13.6	2.49	.42	.56	.71	44.8	13.1	2.81	.42	.57	.73	43.0	12.6	3.16	.43	.58	.74	41.1	12.0	3.56	.43	.60	.76
	1550	730	47.0	13.8	2.50	.43	.58	.74	45.3	13.3	2.81	.43	.59	.76	43.4	12.7	3.16	.43	.61	.78	41.5	12.2	3.57	.44	.62	.80
13ACC-042 — CB31MV-51 TXV COOLING CAPACITY																										
63°F (17°C)	1250	590	40.3	11.8	2.43	.73	.90	1.00	38.8	11.4	2.75	.74	.92	1.00	37.3	10.9	3.11	.76	.94	1.00	35.7	10.5	3.52	.77	.97	1.00
	1400	660	41.1	12.0	2.44	.76	.94	1.00	39.6	11.6	2.76	.78	.97	1.00	38.1	11.2	3.12	.79	.98	1.00	36.6	10.7	3.52	.82	1.00	1.00
	1550	730	41.8	12.3	2.45	.79	.98	1.00	40.4	11.8	2.76	.81	1.00	1.00	39.0	11.4	3.12	.83	1.00	1.00	37.6	11.0	3.53	.86	1.00	1.00
67°F (19°C)	1250	590	42.9	12.6	2.46	.56	.70	.86	41.3	12.1	2.77	.57	.72	.88	39.7	11.6	3.13	.58	.73	.90	37.9	11.1	3.54	.59	.75	.93
	1400	660	43.6	12.8	2.46	.58	.73	.91	42.0	12.3	2.78	.59	.75	.93	40.3	11.8	3.13	.60	.77	.95	38.5	11.3	3.54	.61	.79	.97
	1550	730	44.1	12.9	2.47	.60	.77	.95	42.5	12.5	2.78	.61	.78	.97	40.8	12.0	3.14	.62	.81	.99	39.0	11.4	3.55	.63	.83	1.00
71°F (22°C)	1250	590	45.9	13.5	2.49	.41	.55	.68	44.2	13.0	2.80	.41	.55	.69	42.5	12.5	3.15	.42	.56	.71	40.6	11.9	3.56	.42	.57	.72
	1400	660	46.6	13.7	2.49	.42	.56	.71	44.9	13.2	2.81	.42	.57	.72	43.1	12.6	3.16	.43	.58	.74	41.2	12.1	3.56	.43	.59	.76
	1550	730	47.1	13.8	2.50	.43	.58	.74	45.4	13.3	2.81	.43	.59	.76	43.5	12.7	3.16	.43	.60	.78	41.6	12.2	3.57	.44	.62	.80
13ACC-042 — CVP10-46/EC10Q4 TXV COOLING CAPACITY																										
63°F (17°C)	1250	590	38.4	11.3	2.43	.73	.90	1.00	37.1	10.9	2.75	.74	.92	1.00	35.7	10.5	3.12	.76	.94	1.00	34.3	10.1	3.53	.77	.96	1.00
	1400	660	39.2	11.5	2.44	.76	.94	1.00	37.9	11.1	2.76	.77	.96	1.00	36.5	10.7	3.13	.79	.98	1.00	35.1	10.3	3.53	.81	.99	1.00
	1550	730	40.0	11.7	2.45	.79	.97	1.00	38.6	11.3	2.77	.81	.99	1.00	37.3	10.9	3.13	.83	1.00	1.00	35.9	10.5	3.54	.85	1.00	1.00
67°F (19°C)	1250	590	40.8	12.0	2.45	.56	.71	.86	39.4	11.5	2.77	.57	.72	.88	37.9	11.1	3.13	.58	.73	.90	36.2	10.6	3.55	.59	.75	.92
	1400	660	41.5	12.2	2.46	.58	.73	.90	40.0	11.7	2.77	.59	.75	.92	38.4	11.3	3.14	.60	.77	.95	36.8	10.8	3.55	.61	.79	.96
	1550	730	42.0	12.3	2.46	.59	.77	.94	40.5	11.9	2.78	.61	.78	.96	38.9	11.4	3.14	.62	.80	.98	37.3	10.9	3.55	.63	.83	1.00
71°F (22°C)	1250	590	43.6	12.8	2.48	.41	.55	.68	42.1	12.3	2.79	.42	.56	.69	40.5	11.9	3.15	.42	.56	.71	38.8	11.4	3.56	.42	.57	.72
	1400	660	44.3	13.0	2.48	.42	.56	.71	42.7	12.5	2.80	.42	.57	.73	41.0	12.0	3.16	.43	.58	.74	39.3	11.5	3.57	.43	.59	.76
	1550	730	44.8	13.1	2.49	.43	.58	.74	43.2	12.7	2.80	.43	.59	.76	41.5	12.2	3.16	.43	.60	.78	39.7	11.6	3.57	.44	.62	.80

RATINGS — 3.5 TON

NOTE - For Temperatures and Capacities not shown in tables, see bulletin - Cooling Unit Rating Table Correction Factor Data in Miscellaneous Engineering Data section.

Entering Wet Bulb Temperature	Total Air Volume		Outdoor Air Temperature Entering Outdoor Coil																							
			85°F (29°C)						95°F (35°C)						105°F (41°C)						115°F (46°C)					
			Total Cooling Capacity		Comp Motor kW Input	Sensible To Total Ratio (S/T) Dry Bulb			Total Cooling Capacity		Comp Motor kW Input	Sensible To Total Ratio (S/T) Dry Bulb			Total Cooling Capacity		Comp Motor kW Input	Sensible To Total Ratio (S/T) Dry Bulb			Total Cooling Capacity		Comp Motor kW Input	Sensible To Total Ratio (S/T) Dry Bulb		
	cfm	L/s	kBtuh	kW		75°F 24°C	80°F 27°C	85°F 29°C	kBtuh	kW		75°F 24°C	80°F 27°C	85°F 29°C	kBtuh	kW		75°F 24°C	80°F 27°C	85°F 29°C	kBtuh	kW		75°F 24°C	80°F 27°C	85°F 29°C
13ACC-042 — CVP10-51/EC10Q4 TXV COOLING CAPACITY																										
63°F (17°C)	1250	590	38.5	11.3	2.43	.73	.90	1.00	37.1	10.9	2.75	.74	.91	1.00	35.7	10.5	3.10	.75	.94	1.00	34.2	10.0	3.52	.77	.96	1.00
	1400	660	39.3	11.5	2.44	.76	.94	1.00	37.9	11.1	2.75	.77	.96	1.00	36.5	10.7	3.11	.79	.98	1.00	35.0	10.3	3.52	.81	.99	1.00
	1550	730	40.0	11.7	2.44	.79	.98	1.00	38.7	11.3	2.76	.81	.99	1.00	37.3	10.9	3.12	.83	1.00	1.00	35.9	10.5	3.53	.85	1.00	1.00
67°F (19°C)	1250	590	41.0	12.0	2.45	.56	.70	.86	39.5	11.6	2.76	.57	.71	.88	37.9	11.1	3.12	.58	.73	.90	36.3	10.6	3.54	.58	.74	.92
	1400	660	41.6	12.2	2.46	.58	.73	.90	40.1	11.8	2.77	.59	.75	.92	38.5	11.3	3.13	.59	.76	.94	36.8	10.8	3.54	.60	.79	.97
	1550	730	42.2	12.4	2.46	.59	.76	.94	40.7	11.9	2.78	.60	.78	.96	39.0	11.4	3.14	.61	.80	.98	37.3	10.9	3.54	.63	.83	1.00
71°F (22°C)	1250	590	43.8	12.8	2.48	.41	.54	.68	42.3	12.4	2.79	.41	.55	.69	40.6	11.9	3.15	.42	.56	.70	38.9	11.4	3.56	.42	.57	.72
	1400	660	44.4	13.0	2.49	.42	.56	.71	42.9	12.6	2.80	.42	.57	.72	41.2	12.1	3.15	.42	.58	.74	39.4	11.5	3.56	.43	.59	.76
	1550	730	45.0	13.2	2.49	.42	.58	.74	43.4	12.7	2.80	.43	.59	.75	41.7	12.2	3.16	.43	.60	.77	39.8	11.7	3.57	.44	.62	.80

RATINGS — 4 TON (-047)

Entering Wet Bulb Temperature	Total Air Volume		Outdoor Air Temperature Entering Outdoor Coil																							
			85°F (29°C)						95°F (35°C)						105°F (41°C)						115°F (46°C)					
			Total Cooling Capacity		Comp Motor kW Input	Sensible To Total Ratio (S/T) Dry Bulb			Total Cooling Capacity		Comp Motor kW Input	Sensible To Total Ratio (S/T) Dry Bulb			Total Cooling Capacity		Comp Motor kW Input	Sensible To Total Ratio (S/T) Dry Bulb			Total Cooling Capacity		Comp Motor kW Input	Sensible To Total Ratio (S/T) Dry Bulb		
	cfm	L/s	kBtuh	kW		75°F 24°C	80°F 27°C	85°F 29°C	kBtuh	kW		75°F 24°C	80°F 27°C	85°F 29°C	kBtuh	kW		75°F 24°C	80°F 27°C	85°F 29°C	kBtuh	kW		75°F 24°C	80°F 27°C	85°F 29°C
13ACC-047 — C26-46 TXV and RFC COOLING CAPACITY																										
63°F (17°C)	1300	615	42.9	12.6	2.79	.74	.89	1.00	41.5	12.2	3.15	.75	.90	1.00	39.9	11.7	3.56	.77	.92	1.00	38.2	11.2	4.03	.78	.94	1.00
	1500	710	44.0	12.9	2.80	.78	.93	1.00	42.5	12.5	3.15	.79	.95	1.00	40.9	12.0	3.56	.81	.96	1.00	39.3	11.5	4.03	.82	.98	1.00
	1700	800	45.0	13.2	2.80	.81	.97	1.00	43.5	12.7	3.16	.83	.98	1.00	41.9	12.3	3.56	.85	.99	1.00	40.3	11.8	4.04	.86	1.00	1.00
67°F (19°C)	1300	615	45.7	13.4	2.80	.58	.72	.85	44.1	12.9	3.16	.59	.73	.87	42.3	12.4	3.57	.59	.74	.88	40.5	11.9	4.05	.60	.76	.90
	1500	710	46.6	13.7	2.81	.60	.76	.90	44.9	13.2	3.17	.61	.77	.91	43.2	12.7	3.58	.62	.78	.93	41.3	12.1	4.05	.63	.80	.95
	1700	800	47.3	13.9	2.82	.62	.79	.94	45.7	13.4	3.17	.63	.81	.96	43.9	12.9	3.58	.64	.82	.97	42.0	12.3	4.06	.65	.84	.99
71°F (22°C)	1300	615	48.8	14.3	2.82	.43	.56	.69	47.1	13.8	3.18	.43	.57	.70	45.2	13.2	3.59	.43	.58	.72	43.3	12.7	4.07	.44	.59	.73
	1500	710	49.7	14.6	2.83	.44	.58	.73	47.9	14.0	3.18	.44	.59	.74	46.0	13.5	3.60	.44	.60	.76	44.1	12.9	4.07	.45	.61	.78
	1700	800	50.4	14.8	2.83	.45	.61	.77	48.6	14.2	3.19	.45	.62	.78	46.7	13.7	3.60	.45	.63	.80	44.7	13.1	4.07	.46	.64	.82
13ACC-047 — C26-41 TXV and RFC COOLING CAPACITY																										
63°F (17°C)	1300	615	43.3	12.7	2.79	.75	.89	.99	41.9	12.3	3.15	.76	.90	1.00	40.3	11.8	3.56	.77	.92	1.00	38.6	11.3	4.04	.79	.94	1.00
	1500	710	44.4	13.0	2.80	.78	.93	1.00	42.9	12.6	3.16	.79	.95	1.00	41.3	12.1	3.57	.81	.96	1.00	39.7	11.6	4.04	.83	.98	1.00
	1700	800	45.4	13.3	2.80	.82	.97	1.00	43.9	12.9	3.16	.83	.98	1.00	42.3	12.4	3.57	.85	.99	1.00	40.7	11.9	4.04	.87	1.00	1.00
67°F (19°C)	1300	615	46.0	13.5	2.80	.58	.72	.86	44.4	13.0	3.16	.59	.73	.87	42.7	12.5	3.57	.59	.75	.89	40.9	12.0	4.05	.60	.76	.91
	1500	710	46.9	13.7	2.81	.60	.76	.90	45.3	13.3	3.17	.61	.77	.92	43.5	12.7	3.58	.62	.79	.94	41.7	12.2	4.06	.63	.80	.95
	1700	800	47.6	14.0	2.81	.62	.79	.94	46.0	13.5	3.17	.63	.81	.96	44.2	13.0	3.58	.64	.83	.97	42.3	12.4	4.06	.66	.84	.99
71°F (22°C)	1300	615	49.1	14.4	2.82	.43	.56	.70	47.4	13.9	3.18	.43	.57	.71	45.6	13.4	3.59	.43	.58	.72	43.7	12.8	4.06	.44	.59	.74
	1500	710	50.0	14.7	2.83	.44	.59	.73	48.2	14.1	3.18	.44	.60	.75	46.4	13.6	3.59	.44	.60	.76	44.4	13.0	4.07	.45	.61	.78
	1700	800	50.7	14.9	2.83	.45	.61	.77	48.9	14.3	3.19	.45	.62	.79	47.0	13.8	3.60	.45	.63	.80	45.0	13.2	4.08	.46	.64	.82
13ACC-047 — C23-51 TXV and RFC COOLING CAPACITY																										
63°F (17°C)	1300	615	44.3	13.0	2.80	.74	.88	.99	42.8	12.5	3.16	.75	.89	1.00	41.2	12.1	3.57	.76	.91	1.00	39.5	11.6	4.05	.77	.93	1.00
	1500	710	45.4	13.3	2.81	.77	.92	1.00	43.8	12.8	3.17	.78	.93	1.00	42.2	12.4	3.58	.80	.95	1.00	40.5	11.9	4.06	.81	.97	1.00
	1700	800	46.3	13.6	2.81	.80	.96	1.00	44.8	13.1	3.17	.82	.97	1.00	43.1	12.6	3.58	.83	.98	1.00	41.5	12.2	4.06	.85	1.00	1.00
67°F (19°C)	1300	615	47.2	13.8	2.81	.57	.71	.84	45.6	13.4	3.17	.58	.72	.86	43.8	12.8	3.58	.59	.74	.88	41.9	12.3	4.06	.60	.75	.89
	1500	710	48.1	14.1	2.82	.59	.75	.89	46.4	13.6	3.18	.60	.76	.90	44.6	13.1	3.59	.61	.77	.92	42.7	12.5	4.07	.62	.79	.94
	1700	800	48.9	14.3	2.82	.61	.78	.93	47.1	13.8	3.18	.62	.79	.94	45.3	13.3	3.60	.63	.81	.96	43.4	12.7	4.08	.64	.83	.98
71°F (22°C)	1300	615	50.4	14.8	2.83	.43	.56	.68	48.7	14.3	3.19	.43	.56	.70	46.8	13.7	3.60	.43	.57	.71	44.9	13.2	4.08	.43	.58	.72
	1500	710	51.4	15.1	2.84	.43	.58	.72	49.6	14.5	3.19	.44	.58	.73	47.6	14.0	3.61	.44	.59	.75	45.6	13.4	4.09	.45	.61	.77
	1700	800	52.1	15.3	2.84	.44	.60	.76	50.3	14.7	3.20	.45	.61	.77	48.3	14.2	3.62	.45	.62	.79	46.2	13.5	4.09	.45	.63	.81
13ACC-047 — C26-51/65 TXV and RFC COOLING CAPACITY																										
63°F (17°C)	1300	615	44.7	13.1	2.81	.74	.88	1.00	43.2	12.7	3.17	.75	.90	1.00	41.5	12.2	3.57	.76	.92	1.00	39.8	11.7	4.05	.78	.93	1.00
	1500	710	45.9	13.5	2.81	.78	.93	1.00	44.3	13.0	3.17	.79	.94	1.00	42.6	12.5	3.58	.81	.96	1.00	40.8	12.0	4.06	.82	.98	1.00
	1700	800	47.0	13.8	2.82	.81	.97	1.00	45.4	13.3	3.18	.83	.98	1.00	43.7	12.8	3.59	.84	.99	1.00	42.0	12.3	4.07	.86	1.00	1.00
67°F (19°C)	1300	615	47.7	14.0	2.82	.58	.71	.85	46.0	13.5	3.18	.58	.73	.86	44.2	13.0	3.60	.59	.74	.88	42.3	12.4	4.07	.60	.75	.90
	1500	710	48.7	14.3	2.83	.60	.75	.89	46.9	13.7	3.19	.61	.77	.91	45.0	13.2	3.60	.61	.78	.93	43.1	12.6	4.08	.63	.80	.95
	1700	800	49.5	14.5	2.84	.62	.79	.94	47.7	14.0	3.19	.63	.80	.96	45.8	13.4	3.61	.64	.82	.97	43.8	12.8	4.08	.65	.84	.99
71°F (22°C)	1300	615	51.0	14.9	2.84	.43	.56	.69	49.1	14.4	3.20	.43	.57	.70	47.2	13.8	3.62	.43	.57	.71	45.2	13.2	4.09	.44	.58	.73
	1500	710	52.0	15.2	2.85	.44	.58	.73	50.1	14.7	3.21	.44	.59	.74	48.1	14.1	3.62	.44	.60	.76	46.0	13.5	4.10	.45	.61	.77
	1700	800	52.8	15.5	2.86	.45	.60	.77	50.8	14.9	3.21	.45	.62	.78	48.8	14.3	3.63	.45	.63	.80	46.6	13.7	4.10	.46	.64	.82
13ACC-047 — C33-48B/C TXV and RFC COOLING CAPACITY																										
63°F (17°C)	1300	615	44.6	13.1	2.81	.73	.87	.98	43.1	12.6	3.17	.74	.89	1.00	41.5	12.2	3.59	.76	.90	1.00	39.8	11.7	4.07	.77	.92	1.00
	1500	710	45.7	13.4	2.82	.77	.91	1.00	44.2	13.0	3.18	.78	.93	1.00	42.5	12.5	3.60	.79	.95	1.00	40.8	12.0	4.08	.81	.96	1.00
	1700	800	46.6	13.7	2.82	.80	.95	1.00	45.1	13.2	3.19	.81	.96	1.00	43.4	12.7	3.60	.83	.98	1.00	41.8	12.3	4.08	.85	.99	1.00
67°F (19°C)	1300	615	47.6	14.0	2.83	.57	.71	.84	46.0	13.5	3.18	.58	.72	.85	44.2	13.0	3.60	.59	.73	.87	42.3	12.4	4.08	.59	.75	.89
	1500	710	48.5	14.2	2.83	.59	.74	.88	46.8	13.7	3.19	.60	.75	.90	45.0	13.2	3.61	.61	.77	.92	43.1	12.6	4.09	.62	.78	.94
	1700	800	49.3	14.4	2.83	.61	.77	.92	47.5	13.9	3.20	.62	.79	.94	45.7	13.4	3.61	.63	.81	.95	43.7	12.8	4.10	.64	.82	.97
71°F (22°C)	1300	615	50.8	14.9	2.84	.43	.56	.68	49.1	14.4	3.21	.43	.56	.69	47.2	13.8	3.62	.43	.57	.71	45.3	13.3	4.10	.43	.58	.72
	1500	710	51.8	15.2	2.85	.43	.58	.72	50.0	14.7	3.21	.44	.58	.73	48.1	14.1	3.62	.44	.59	.74	46.1	13.5	4.10	.44	.60	.76
	1700	800	52.6	15.4	2.85	.44	.60	.75	50.7	14.9	3.21	.44	.61	.77	48.7	14.3	3.63	.45	.62	.78	46.7	13.7	4.11	.45	.63	.80
13ACC-047 — C23-51/65 TXV and RFC COOLING CAPACITY																										
63°F (17°C)	1300	615	45.1	13.2	2.80	.73	.88	.99	43.6	12.8	3.16	.74	.89	1.00	41.9	12.3	3.57	.76	.91	1.00	40.1	11.8	4.05	.77	.93	1.00
	1500	710	46.3	13.6	2.81	.77	.92	1.00	44.7	13.1	3.17	.78	.93	1.00	43.0	12.6	3.58	.80	.95	1.00	41.2	12.1	4.05	.81	.97	1.00
	1700	800	47.3	13.9	2.81	.80	.96	1.00	45.7	13.4	3.17	.81	.97	1.00	44.0	12.9	3.58	.83	.98	1.00	42.2	12.4	4.06	.85	1.00	1.00
67°F (19°C)	1300	615	48.2	14.1	2.82	.57	.71	.84	46.5	13.6	3.18	.58	.72	.86	44.6	13.1	3.59	.59	.73	.87	42.7	12.5	4.07	.59	.75	.90
	1500	710	49.2	14.4	2.83	.59	.74	.89	47.4	13.9	3.19	.60	.76	.90	45.5	13.3	3.60	.61	.77	.92	43.6	12.8	4.07	.62	.79	.94
	1700	800	50.0	14.7	2.83	.61	.78	.93	48.2	14.1	3.19	.62	.79	.94	46.3	13.6	3.60	.63	.81	.96	44.2	13.0	4.08	.64	.83	.98
71°F (22°C)	1300	615	51.5	15.1	2.84	.43	.56	.68	49.7	14.6	3.20	.43	.56	.69	47.8	14.0	3.61	.43	.57	.71	45.7	13.4	4.09	.44	.58	.72
	1500	710	52.6	15.4	2.85	.43	.58	.72	50.7	14.9	3.21	.44	.58	.73	48.6	14.2	3.62	.44	.59	.75	46.6	13.7	4.10	.44	.61	.76
	1700	800	53.4	15.6	2.85	.44	.60	.75	51.4	15.1	3.21	.45	.61	.77	49.4	14.5	3.62	.45	.62	.79	47.2	13.8	4.10	.45	.63	.80

NOTE - For Temperatures and Capacities not shown in tables, see bulletin - Cooling Unit Rating Table Correction Factor Data in Miscellaneous Engineering Data section.

Entering Wet Bulb Temperature	Total Air Volume		Outdoor Air Temperature Entering Outdoor Coil																								
			85°F (29°C)						95°F (35°C)						105°F (41°C)						115°F (46°C)					
			Total Cooling Capacity		Comp Motor kW Input	Sensible To Total Ratio (S/T) Dry Bulb			Total Cooling Capacity		Comp Motor kW Input	Sensible To Total Ratio (S/T) Dry Bulb			Total Cooling Capacity		Comp Motor kW Input	Sensible To Total Ratio (S/T) Dry Bulb			Total Cooling Capacity		Comp Motor kW Input	Sensible To Total Ratio (S/T) Dry Bulb		
	cfm	L/s	kBtuh	kW		75°F 24°C	80°F 27°C	85°F 29°C	kBtuh	kW		75°F 24°C	80°F 27°C	85°F 29°C	kBtuh	kW		75°F 24°C	80°F 27°C	85°F 29°C	kBtuh	kW		75°F 24°C	80°F 27°C	85°F 29°C
13ACC-047 — C33-50/60C TXV and RFC COOLING CAPACITY																										
63°F (17°C)	1300	615	45.1	13.2	2.81	.73	.87	.98	43.5	12.7	3.17	.74	.89	1.00	41.8	12.3	3.58	.76	.90	1.00	40.1	11.8	4.06	.77	.92	1.00
	1500	710	46.2	13.5	2.81	.76	.91	1.00	44.6	13.1	3.18	.78	.93	1.00	42.9	12.6	3.59	.79	.95	1.00	41.2	12.1	4.06	.81	.96	1.00
	1700	800	47.2	13.8	2.82	.80	.95	1.00	45.6	13.4	3.18	.81	.96	1.00	43.8	12.8	3.59	.83	.98	1.00	42.1	12.3	4.07	.85	1.00	1.00
67°F (19°C)	1300	615	48.1	14.1	2.82	.57	.71	.84	46.4	13.6	3.18	.58	.72	.85	44.6	13.1	3.59	.59	.73	.87	42.7	12.5	4.08	.59	.74	.89
	1500	710	49.1	14.4	2.83	.59	.74	.88	47.3	13.9	3.19	.60	.75	.90	45.5	13.3	3.60	.61	.77	.92	43.5	12.7	4.08	.62	.79	.94
	1700	800	49.9	14.6	2.83	.61	.77	.92	48.1	14.1	3.20	.62	.79	.94	46.2	13.5	3.61	.63	.80	.96	44.2	13.0	4.09	.64	.82	.97
71°F (22°C)	1300	615	51.4	15.1	2.84	.43	.55	.68	49.6	14.5	3.20	.43	.56	.69	47.7	14.0	3.61	.43	.57	.70	45.7	13.4	4.10	.44	.58	.72
	1500	710	52.4	15.4	2.85	.43	.57	.72	50.6	14.8	3.21	.44	.58	.73	48.6	14.2	3.62	.44	.59	.74	46.5	13.6	4.10	.44	.60	.76
	1700	800	53.2	15.6	2.85	.44	.60	.75	51.3	15.0	3.21	.44	.60	.76	49.3	14.4	3.63	.45	.61	.78	47.2	13.8	4.11	.45	.63	.80
13ACC-047 — C26-65EAP TXV and RFC COOLING CAPACITY																										
63°F (17°C)	1300	615	46.1	13.5	2.82	.74	.88	1.00	44.5	13.0	3.17	.75	.90	1.00	42.7	12.5	3.58	.76	.92	1.00	40.9	12.0	4.06	.78	.93	1.00
	1500	710	47.4	13.9	2.82	.77	.93	1.00	45.7	13.4	3.18	.79	.94	1.00	43.9	12.9	3.59	.80	.96	1.00	42.0	12.3	4.07	.82	.98	1.00
	1700	800	48.4	14.2	2.83	.81	.97	1.00	46.7	13.7	3.18	.83	.98	1.00	45.0	13.2	3.60	.84	1.00	1.00	43.2	12.7	4.07	.86	1.00	1.00
67°F (19°C)	1300	615	49.2	14.4	2.83	.58	.71	.85	47.4	13.9	3.19	.58	.72	.86	45.5	13.3	3.60	.59	.74	.88	43.6	12.8	4.08	.60	.75	.90
	1500	710	50.3	14.7	2.84	.59	.75	.90	48.4	14.2	3.20	.60	.76	.91	46.5	13.6	3.61	.61	.78	.93	44.4	13.0	4.09	.62	.80	.95
	1700	800	51.2	15.0	2.84	.62	.79	.94	49.3	14.4	3.20	.63	.80	.96	47.2	13.8	3.61	.64	.82	.97	45.1	13.2	4.09	.65	.84	.99
71°F (22°C)	1300	615	52.7	15.4	2.85	.43	.56	.69	50.7	14.9	3.21	.43	.56	.70	48.7	14.3	3.62	.43	.57	.71	46.7	13.7	4.10	.44	.58	.73
	1500	710	53.7	15.7	2.86	.44	.58	.72	51.8	15.2	3.22	.44	.59	.74	49.7	14.6	3.63	.44	.60	.75	47.5	13.9	4.11	.45	.61	.77
	1700	800	54.6	16.0	2.86	.44	.60	.76	52.5	15.4	3.23	.45	.61	.78	50.4	14.8	3.64	.45	.63	.80	48.1	14.1	4.11	.46	.64	.82
13ACC-047 — CR26-36N/W-F TXV and RFC COOLING CAPACITY																										
63°F (17°C)	1300	615	42.9	12.6	2.80	.74	.88	.99	41.5	12.2	3.16	.75	.90	1.00	39.9	11.7	3.57	.77	.91	1.00	38.3	11.2	4.05	.78	.93	1.00
	1500	710	43.9	12.9	2.81	.78	.93	1.00	42.5	12.5	3.16	.79	.94	1.00	40.9	12.0	3.58	.80	.96	1.00	39.3	11.5	4.06	.82	.97	1.00
	1700	800	44.9	13.2	2.81	.81	.96	1.00	43.4	12.7	3.17	.82	.97	1.00	41.8	12.3	3.58	.84	.99	1.00	40.2	11.8	4.06	.86	1.00	1.00
67°F (19°C)	1300	615	45.6	13.4	2.81	.58	.72	.85	44.1	12.9	3.17	.58	.73	.86	42.4	12.4	3.58	.59	.74	.88	40.6	11.9	4.06	.60	.76	.90
	1500	710	46.5	13.6	2.81	.60	.75	.90	44.9	13.2	3.17	.60	.76	.91	43.2	12.7	3.59	.61	.78	.93	41.3	12.1	4.07	.62	.80	.95
	1700	800	47.2	13.8	2.82	.62	.79	.94	45.5	13.3	3.18	.63	.80	.95	43.8	12.8	3.59	.64	.82	.96	41.9	12.3	4.07	.65	.84	.98
71°F (22°C)	1300	615	48.7	14.3	2.83	.43	.56	.69	47.1	13.8	3.19	.43	.57	.70	45.3	13.3	3.60	.43	.57	.72	43.4	12.7	4.08	.44	.59	.73
	1500	710	49.6	14.5	2.83	.44	.58	.73	47.9	14.0	3.19	.44	.59	.74	46.0	13.5	3.60	.44	.60	.76	44.1	12.9	4.08	.45	.61	.77
	1700	800	50.3	14.7	2.84	.44	.60	.76	48.5	14.2	3.20	.45	.61	.78	46.6	13.7	3.61	.45	.62	.79	44.6	13.1	4.09	.46	.64	.81
13ACC-047 — CR26-48N/W-F TXV and RFC COOLING CAPACITY																										
63°F (17°C)	1300	615	43.7	12.8	2.80	.73	.87	.98	42.2	12.4	3.16	.74	.88	.99	40.6	11.9	3.58	.75	.90	1.00	38.9	11.4	4.05	.77	.92	1.00
	1500	710	44.7	13.1	2.81	.76	.91	1.00	43.2	12.7	3.17	.77	.93	1.00	41.6	12.2	3.58	.79	.94	1.00	39.9	11.7	4.06	.80	.96	1.00
	1700	800	45.7	13.4	2.82	.79	.95	1.00	44.1	12.9	3.17	.81	.96	1.00	42.5	12.5	3.59	.82	.98	1.00	40.8	12.0	4.06	.84	.99	1.00
67°F (19°C)	1300	615	46.7	13.7	2.82	.57	.70	.84	45.0	13.2	3.17	.58	.72	.85	43.3	12.7	3.59	.58	.73	.87	41.4	12.1	4.07	.59	.74	.89
	1500	710	47.6	14.0	2.82	.59	.74	.88	45.9	13.5	3.18	.59	.75	.90	44.1	12.9	3.59	.60	.76	.91	42.2	12.4	4.08	.61	.78	.93
	1700	800	48.3	14.2	2.83	.61	.77	.92	46.6	13.7	3.19	.61	.78	.93	44.8	13.1	3.60	.62	.80	.95	42.8	12.5	4.08	.64	.82	.97
71°F (22°C)	1300	615	49.9	14.6	2.84	.43	.55	.68	48.2	14.1	3.19	.43	.56	.69	46.3	13.6	3.61	.43	.57	.70	44.4	13.0	4.09	.43	.57	.72
	1500	710	50.8	14.9	2.84	.43	.57	.71	49.0	14.4	3.20	.44	.58	.72	47.1	13.8	3.61	.44	.59	.74	45.1	13.2	4.10	.44	.60	.76
	1700	800	51.6	15.1	2.84	.44	.59	.74	49.7	14.6	3.20	.44	.60	.76	47.8	14.0	3.62	.45	.61	.78	45.7	13.4	4.10	.45	.62	.79
13ACC-047 — CR26-60N/W-F TXV and RFC COOLING CAPACITY																										
63°F (17°C)	1300	615	45.2	13.2	2.81	.74	.88	.99	43.6	12.8	3.17	.75	.89	1.00	41.9	12.3	3.58	.76	.91	1.00	40.1	11.8	4.05	.78	.93	1.00
	1500	710	46.3	13.6	2.82	.77	.92	1.00	44.7	13.1	3.17	.79	.94	1.00	43.0	12.6	3.58	.80	.96	1.00	41.2	12.1	4.06	.82	.98	1.00
	1700	800	47.4	13.9	2.82	.81	.96	1.00	45.7	13.4	3.17	.82	.98	1.00	44.0	12.9	3.59	.84	.99	1.00	42.3	12.4	4.07	.85	1.00	1.00
67°F (19°C)	1300	615	48.2	14.1	2.82	.57	.71	.84	46.5	13.6	3.18	.58	.72	.86	44.6	13.1	3.59	.59	.74	.88	42.7	12.5	4.07	.60	.75	.90
	1500	710	49.2	14.4	2.83	.59	.75	.89	47.4	13.9	3.19	.60	.76	.91	45.5	13.3	3.60	.61	.78	.93	43.5	12.7	4.08	.62	.79	.95
	1700	800	50.0	14.7	2.84	.62	.78	.93	48.2	14.1	3.19	.62	.80	.95	46.2	13.5	3.60	.63	.81	.97	44.2	13.0	4.08	.65	.83	.98
71°F (22°C)	1300	615	51.6	15.1	2.84	.43	.56	.69	49.7	14.6	3.20	.43	.56	.70	47.7	14.0	3.62	.43	.57	.71	45.7	13.4	4.09	.44	.58	.73
	1500	710	52.5	15.4	2.85	.44	.58	.72	50.6	14.8	3.21	.44	.59	.74	48.6	14.2	3.62	.44	.60	.75	46.5	13.6	4.10	.45	.61	.77
	1700	800	53.3	15.6	2.86	.44	.60	.76	51.4	15.1	3.21	.45	.61	.77	49.3	14.4	3.63	.45	.62	.79	47.2	13.8	4.10	.46	.63	.81
13ACC-047 — CH23-51 TXV and RFC COOLING CAPACITY																										
63°F (17°C)	1300	615	43.8	12.8	2.81	.74	.88	.99	42.4	12.4	3.17	.75	.89	1.00	40.8	12.0	3.58	.76	.91	1.00	39.1	11.5	4.06	.78	.93	1.00
	1500	710	44.9	13.2	2.81	.77	.92	1.00	43.4	12.7	3.17	.78	.94	1.00	41.8	12.3	3.59	.80	.95	1.00	40.1	11.8	4.07	.82	.97	1.00
	1700	800	45.9	13.5	2.82	.80	.96	1.00	44.3	13.0	3.18	.82	.97	1.00	42.7	12.5	3.59	.83	.98	1.00	41.1	12.0	4.07	.85	1.00	1.00
67°F (19°C)	1300	615	46.7	13.7	2.82	.57	.71	.85	45.1	13.2	3.18	.58	.72	.86	43.3	12.7	3.59	.59	.74	.88	41.5	12.2	4.07	.60	.75	.90
	1500	710	47.6	14.0	2.83	.59	.75	.89	45.9	13.5	3.18	.60	.76	.90	44.2	13.0	3.60	.61	.77	.92	42.3	12.4	4.08	.62	.79	.94
	1700	800	48.3	14.2	2.83	.61	.78	.93	46.6	13.7	3.19	.62	.80	.94	44.8	13.1	3.60	.63	.81	.96	42.9	12.6	4.09	.64	.83	.98
71°F (22°C)	1300	615	49.9	14.6	2.84	.43	.56	.69	48.2	14.1	3.20	.43	.56	.70	46.3	13.6	3.61	.43	.57	.71	44.4	13.0	4.09	.44	.58	.73
	1500	710	50.8	14.9	2.84	.44	.58	.72	49.0	14.4	3.20	.44	.59	.74	47.1	13.8	3.62	.44	.60	.75	45.2	13.2	4.10	.44	.61	.77
	1700	800	51.5	15.1	2.85	.44	.60	.76	49.7	14.6	3.21	.45	.61	.77	47.8	14.0	3.62	.45	.62	.79	45.7	13.4	4.11	.46	.63	.81
13ACC-047 — CH23-65 TXV and RFC COOLING CAPACITY																										
63°F (17°C)	1300	615	44.2	13.0	2.80	.73	.88	.99	42.7	12.5	3.15	.75	.89	1.00	41.1	12.0	3.57	.76	.91	1.00	39.4	11.5	4.04	.78	.93	1.00
	1500	710	45.3	13.3	2.80	.77	.92	1.00	43.8	12.8	3.16	.78	.93	1.00	42.1	12.3	3.58	.80	.95	1.00	40.4	11.8	4.04	.81	.97	1.00
	1700	800	46.3	13.6	2.81	.80	.96	1.00	44.7	13.1	3.17	.82	.97	1.00	43.1	12.6	3.58	.83	.98	1.00	41.4	12.1	4.05	.85	1.00	1.00
67°F (19°C)	1300	615	47.1	13.8	2.81	.57	.71	.84	45.5	13.3	3.17	.58	.72	.86	43.7	12.8	3.58	.59	.73	.88	41.8	12.3	4.06	.60	.75	.90
	1500	710	48.1	14.1	2.82	.59	.74	.89	46.4	13.6	3.18	.60	.76	.90	44.5	13.0	3.59	.61	.78	.92	42.6	12.5	4.07	.62	.79	.94
	1700	800	48.8	14.3	2.82	.61	.78	.93	47.1	13.8	3.18	.62	.79	.94	45.2	13.2	3.59	.63	.81	.96	43.3	12.7	4.07	.64	.83	.98
71°F (22°C)	1300	615	50.4	14.8	2.83	.43	.56	.69	48.6	14.2	3.19	.43	.56	.70	46.7	13.7	3.60	.43	.57	.71	44.8	13.1	4.08	.44	.58	.72
	1500	710	51.3	15.0	2.84	.43	.58	.72	49.5	14.5	3.19	.44	.59	.73	47.6	14.0	3.61	.44	.59	.75	45.6	13.4	4.09	.45	.61	.77
	1700	800	52.1	15.3	2.84	.44	.60	.76	50.2	14.7	3.20	.45	.61	.77	48.2	14.1	3.61	.45	.62	.79	46.2	13.5	4.09	.45	.63	.81

NOTE - For Temperatures and Capacities not shown in tables, see bulletin - Cooling Unit Rating Table Correction Factor Data in Miscellaneous Engineering Data section.

Entering Wet Bulb Temperature	Total Air Volume		Outdoor Air Temperature Entering Outdoor Coil																							
			85°F (29°C)						95°F (35°C)						105°F (41°C)						115°F (46°C)					
			Total Cooling Capacity		Comp Motor kW Input	Sensible To Total Ratio (S/T) Dry Bulb			Total Cooling Capacity		Comp Motor kW Input	Sensible To Total Ratio (S/T) Dry Bulb			Total Cooling Capacity		Comp Motor kW Input	Sensible To Total Ratio (S/T) Dry Bulb			Total Cooling Capacity		Comp Motor kW Input	Sensible To Total Ratio (S/T) Dry Bulb		
	cfm	L/s	kBtuh	kW		75°F 24°C	80°F 27°C	85°F 29°C	kBtuh	kW		75°F 24°C	80°F 27°C	85°F 29°C	kBtuh	kW		75°F 24°C	80°F 27°C	85°F 29°C	kBtuh	kW		75°F 24°C	80°F 27°C	85°F 29°C
13ACC-047 — CH33-44/48B-2F TXV and RFC COOLING CAPACITY																										
63°F (17°C)	1300	615	44.6	13.1	2.81	.73	.87	.99	43.1	12.6	3.17	.74	.89	1.00	41.4	12.1	3.58	.76	.91	1.00	39.7	11.6	4.06	.77	.92	1.00
	1500	710	45.7	13.4	2.81	.76	.91	1.00	44.2	13.0	3.18	.78	.93	1.00	42.5	12.5	3.59	.79	.95	1.00	40.8	12.0	4.06	.81	.96	1.00
	1700	800	46.7	13.7	2.82	.80	.95	1.00	45.1	13.2	3.18	.81	.97	1.00	43.4	12.7	3.59	.83	.98	1.00	41.7	12.2	4.07	.85	.99	1.00
67°F (19°C)	1300	615	47.6	14.0	2.82	.57	.71	.84	46.0	13.5	3.18	.58	.72	.85	44.2	13.0	3.59	.58	.73	.87	42.3	12.4	4.08	.59	.74	.89
	1500	710	48.6	14.2	2.83	.59	.74	.88	46.9	13.7	3.19	.60	.75	.90	45.0	13.2	3.60	.61	.77	.92	43.1	12.6	4.08	.61	.78	.94
	1700	800	49.4	14.5	2.83	.61	.77	.92	47.6	14.0	3.20	.62	.79	.94	45.7	13.4	3.61	.63	.81	.95	43.8	12.8	4.09	.64	.82	.98
71°F (22°C)	1300	615	50.9	14.9	2.84	.43	.55	.68	49.2	14.4	3.20	.43	.56	.69	47.3	13.9	3.61	.43	.57	.70	45.3	13.3	4.10	.43	.58	.72
	1500	710	51.9	15.2	2.85	.43	.57	.71	50.1	14.7	3.21	.44	.58	.73	48.1	14.1	3.62	.44	.59	.74	46.1	13.5	4.10	.44	.60	.76
	1700	800	52.7	15.4	2.85	.44	.60	.75	50.8	14.9	3.21	.44	.60	.76	48.8	14.3	3.63	.45	.61	.78	46.7	13.7	4.11	.45	.63	.80
13ACC-047 — CH33-48C-2F TXV and RFC COOLING CAPACITY																										
63°F (17°C)	1300	615	45.6	13.4	2.81	.73	.87	.98	44.0	12.9	3.17	.74	.89	1.00	42.3	12.4	3.59	.76	.90	1.00	40.5	11.9	4.06	.77	.92	1.00
	1500	710	46.7	13.7	2.82	.77	.91	1.00	45.1	13.2	3.18	.78	.93	1.00	43.4	12.7	3.59	.79	.95	1.00	41.6	12.2	4.06	.81	.96	1.00
	1700	800	47.7	14.0	2.82	.80	.95	1.00	46.1	13.5	3.18	.81	.97	1.00	44.4	13.0	3.59	.83	.98	1.00	42.6	12.5	4.07	.84	.99	1.00
67°F (19°C)	1300	615	48.6	14.2	2.82	.57	.71	.84	46.9	13.7	3.18	.58	.72	.85	45.1	13.2	3.60	.59	.73	.87	43.2	12.7	4.08	.59	.75	.89
	1500	710	49.6	14.5	2.83	.59	.74	.88	47.9	14.0	3.19	.60	.75	.90	46.0	13.5	3.61	.61	.77	.92	44.0	12.9	4.09	.62	.78	.94
	1700	800	50.4	14.8	2.84	.61	.77	.92	48.6	14.2	3.20	.62	.79	.94	46.7	13.7	3.61	.63	.80	.96	44.7	13.1	4.09	.64	.82	.97
71°F (22°C)	1300	615	52.0	15.2	2.85	.43	.55	.68	50.2	14.7	3.20	.43	.56	.69	48.3	14.2	3.62	.43	.57	.70	46.2	13.5	4.10	.44	.58	.72
	1500	710	53.0	15.5	2.85	.43	.57	.72	51.1	15.0	3.21	.44	.58	.73	49.1	14.4	3.63	.44	.59	.74	47.0	13.8	4.11	.44	.60	.76
	1700	800	53.8	15.8	2.85	.44	.59	.75	51.9	15.2	3.22	.44	.60	.76	49.8	14.6	3.63	.45	.61	.78	47.7	14.0	4.11	.45	.63	.80
13ACC-047 — CH23-68 TXV and RFC COOLING CAPACITY																										
63°F (17°C)	1300	615	46.1	13.5	2.81	.74	.88	1.00	44.5	13.0	3.17	.75	.90	1.00	42.7	12.5	3.58	.76	.92	1.00	40.8	12.0	4.06	.78	.94	1.00
	1500	710	47.3	13.9	2.82	.78	.93	1.00	45.6	13.4	3.18	.79	.95	1.00	43.8	12.8	3.59	.81	.97	1.00	42.0	12.3	4.07	.82	.98	1.00
	1700	800	48.4	14.2	2.83	.81	.97	1.00	46.7	13.7	3.19	.83	.99	1.00	45.0	13.2	3.60	.85	1.00	1.00	43.3	12.7	4.08	.86	1.00	1.00
67°F (19°C)	1300	615	49.1	14.4	2.84	.58	.71	.85	47.4	13.9	3.19	.58	.73	.86	45.5	13.3	3.60	.59	.74	.88	43.5	12.7	4.08	.60	.75	.90
	1500	710	50.3	14.7	2.84	.60	.75	.90	48.4	14.2	3.20	.60	.76	.91	46.4	13.6	3.62	.61	.78	.94	44.4	13.0	4.09	.63	.80	.96
	1700	800	51.1	15.0	2.85	.62	.79	.94	49.2	14.4	3.20	.63	.80	.96	47.2	13.8	3.62	.64	.82	.98	45.1	13.2	4.09	.65	.84	.99
71°F (22°C)	1300	615	52.7	15.4	2.86	.43	.56	.69	50.7	14.9	3.21	.43	.57	.70	48.7	14.3	3.63	.43	.57	.71	46.6	13.7	4.10	.44	.58	.73
	1500	710	53.7	15.7	2.86	.44	.58	.72	51.7	15.2	3.22	.44	.59	.74	49.6	14.5	3.63	.44	.60	.76	47.4	13.9	4.11	.45	.61	.77
	1700	800	54.5	16.0	2.87	.45	.61	.77	52.5	15.4	3.23	.45	.62	.78	50.3	14.7	3.64	.45	.63	.80	48.0	14.1	4.12	.46	.64	.82
13ACC-047 — CH33-50/60C-2F TXV and RFC COOLING CAPACITY																										
63°F (17°C)	1300	615	46.5	13.6	2.82	.73	.87	.99	44.9	13.2	3.18	.74	.89	1.00	43.1	12.6	3.59	.75	.90	1.00	41.3	12.1	4.07	.77	.92	1.00
	1500	710	47.7	14.0	2.83	.76	.91	1.00	46.0	13.5	3.18	.78	.93	1.00	44.3	13.0	3.60	.79	.95	1.00	42.4	12.4	4.07	.81	.97	1.00
	1700	800	48.7	14.3	2.83	.80	.95	1.00	47.1	13.8	3.19	.81	.97	1.00	45.3	13.3	3.60	.83	.98	1.00	43.4	12.7	4.08	.85	1.00	1.00
67°F (19°C)	1300	615	49.7	14.6	2.83	.57	.70	.84	47.9	14.0	3.20	.58	.72	.85	46.0	13.5	3.61	.58	.73	.87	44.0	12.9	4.09	.59	.75	.89
	1500	710	50.8	14.9	2.84	.59	.74	.88	48.9	14.3	3.20	.60	.75	.90	47.0	13.8	3.61	.61	.77	.92	44.9	13.2	4.09	.62	.78	.94
	1700	800	51.6	15.1	2.85	.61	.77	.92	49.7	14.6	3.20	.62	.79	.94	47.7	14.0	3.62	.63	.81	.96	45.6	13.4	4.10	.64	.82	.98
71°F (22°C)	1300	615	53.2	15.6	2.85	.43	.55	.68	51.3	15.0	3.22	.43	.56	.69	49.3	14.4	3.63	.43	.57	.70	47.2	13.8	4.11	.43	.58	.72
	1500	710	54.3	15.9	2.86	.43	.57	.71	52.3	15.3	3.22	.44	.58	.73	50.2	14.7	3.64	.44	.59	.74	48.1	14.1	4.12	.44	.60	.76
	1700	800	55.1	16.1	2.87	.44	.60	.75	53.1	15.6	3.23	.44	.60	.76	51.0	14.9	3.64	.45	.61	.78	48.8	14.3	4.12	.45	.63	.80
13ACC-047 — C33-48B/C TXV with G60UHV-36B-090 or G60UHV-60C COOLING CAPACITY																										
63°F (17°C)	1430	675	45.4	13.3	2.82	.75	.90	1.00	43.9	12.9	3.18	.77	.92	1.00	42.2	12.4	3.60	.78	.93	1.00	40.5	11.9	4.07	.80	.95	1.00
	1630	770	46.4	13.6	2.82	.79	.94	1.00	44.9	13.2	3.19	.80	.95	1.00	43.2	12.7	3.60	.82	.97	1.00	41.5	12.2	4.08	.83	.98	1.00
	1830	865	47.3	13.9	2.83	.82	.97	1.00	45.8	13.4	3.19	.83	.98	1.00	44.2	13.0	3.60	.85	.99	1.00	42.5	12.5	4.08	.87	1.00	1.00
67°F (19°C)	1430	675	48.3	14.2	2.83	.58	.73	.87	46.6	13.7	3.19	.59	.74	.88	44.8	13.1	3.60	.60	.76	.90	42.9	12.6	4.08	.61	.77	.92
	1630	770	49.1	14.4	2.83	.60	.76	.91	47.4	13.9	3.19	.61	.78	.92	45.6	13.4	3.61	.62	.79	.94	43.6	12.8	4.09	.63	.81	.96
	1830	865	49.8	14.6	2.84	.62	.80	.94	48.0	14.1	3.20	.63	.81	.96	46.2	13.5	3.62	.64	.83	.97	44.2	13.0	4.10	.65	.85	.99
71°F (22°C)	1430	675	51.6	15.1	2.85	.43	.57	.70	49.8	14.6	3.21	.43	.58	.72	47.9	14.0	3.62	.44	.58	.73	45.9	13.5	4.10	.44	.59	.75
	1630	770	52.4	15.4	2.85	.44	.59	.74	50.6	14.8	3.21	.44	.60	.75	48.6	14.2	3.63	.44	.61	.77	46.5	13.6	4.11	.45	.62	.79
	1830	865	53.1	15.6	2.86	.45	.61	.77	51.2	15.0	3.22	.45	.62	.79	49.2	14.4	3.63	.45	.63	.80	47.1	13.8	4.12	.46	.64	.82
13ACC-047 — C33-50/60C TXV with G60UHV-60C COOLING CAPACITY																										
63°F (17°C)	1430	675	45.9	13.5	2.82	.75	.90	1.00	44.3	13.0	3.18	.77	.91	1.00	42.6	12.5	3.59	.78	.93	1.00	40.8	12.0	4.07	.80	.95	1.00
	1630	770	46.9	13.7	2.83	.78	.94	1.00	45.3	13.3	3.18	.80	.95	1.00	43.6	12.8	3.60	.81	.97	1.00	41.8	12.3	4.07	.83	.99	1.00
	1830	865	47.8	14.0	2.83	.82	.97	1.00	46.2	13.5	3.19	.83	.98	1.00	44.6	13.1	3.60	.85	.99	1.00	42.8	12.5	4.08	.87	1.00	1.00
67°F (19°C)	1430	675	48.8	14.3	2.83	.58	.73	.87	47.1	13.8	3.19	.59	.74	.88	45.2	13.2	3.61	.60	.75	.90	43.3	12.7	4.09	.61	.77	.92
	1630	770	49.7	14.6	2.84	.60	.76	.91	47.9	14.0	3.20	.61	.77	.93	46.0	13.5	3.61	.62	.79	.94	44.0	12.9	4.10	.63	.81	.96
	1830	865	50.4	14.8	2.84	.62	.79	.94	48.5	14.2	3.20	.63	.81	.96	46.6	13.7	3.62	.64	.83	.98	44.6	13.1	4.09	.65	.85	.99
71°F (22°C)	1430	675	52.2	15.3	2.85	.43	.57	.70	50.3	14.7	3.21	.43	.57	.72	48.4	14.2	3.62	.44	.58	.73	46.3	13.6	4.11	.44	.59	.75
	1630	770	53.0	15.5	2.85	.44	.59	.74	51.1	15.0	3.22	.44	.60	.75	49.1	14.4	3.63	.44	.61	.77	47.0	13.8	4.12	.45	.62	.79
	1830	865	53.7	15.7	2.86	.45	.61	.77	51.7	15.2	3.22	.45	.62	.79	49.7	14.6	3.64	.45	.63	.80	47.6	14.0	4.11	.46	.64	.82
13ACC-047 — CR26-48N-F TXV with G60DFV-60C OR CR26-48W-F TXV with G60DFV-60D-135 COOLING CAPACITY																										
63°F (17°C)	1470	695	44.6	13.1	2.81	.76	.91	1.00	43.1	12.6	3.17	.77	.92	1.00	41.4	12.1	3.58	.78	.94	1.00	39.7	11.6	4.06	.80	.96	1.00
	1670	790	45.5	13.3	2.82	.79	.94	1.00	44.0	12.9	3.17	.80	.96	1.00	42.3	12.4	3.59	.82	.97	1.00	40.7	11.9	4.06	.84	.99	1.00
	1870	885	46.4	13.6	2.82	.82	.97	1.00	44.8	13.1	3.18	.83	.99	1.00	43.2	12.7	3.59	.85	1.00	1.00	41.6	12.2	4.06	.87	1.00	1.00
67°F (19°C)	1470	695	47.5	13.9	2.82	.59	.73	.87	45.8	13.4	3.18	.59	.74	.89	44.0	12.9	3.59	.60	.76	.91	42.1	12.3	4.08	.61	.77	.92
	1670	790	48.2	14.1	2.83	.60	.76	.91	46.5	13.6	3.19	.61	.78	.93	44.7	13.1	3.60	.62	.79	.94	42.8	12.5	4.08	.63	.81	.97
	1870	885	48.9	14.3	2.83	.62	.80	.95	47.1	13.8	3.19	.63	.81	.96	45.2	13.2	3.61	.64	.83	.98	43.3	12.7	4.08	.66	.85	.99
71°F (22°C)	1470	695	50.7	14.9	2.84	.43	.57	.71	48.9	14.3	3.20	.44	.58	.72	47.0	13.8	3.61	.44	.59	.73	45.0	13.2	4.10	.44	.60	.75
	1670	790	51.5	15.1	2.84	.44	.59	.74	49.6	14.5	3.20	.44	.60	.75	47.7	14.0	3.62	.44	.61	.77	45.7	13.4	4.10	.45	.62	.79
	1870	885	52.1	15.3	2.85	.45	.61	.77	50.2	14.7	3.21	.45	.62	.79	48.2	14.1	3.62	.45	.63	.81	46.2	13.5	4.10	.46	.64	.83

NOTE - For Temperatures and Capacities not shown in tables, see bulletin - Cooling Unit Rating Table Correction Factor Data in Miscellaneous Engineering Data section.

Entering Wet Bulb Temperature	Total Air Volume		Outdoor Air Temperature Entering Outdoor Coil																							
			85°F (29°C)						95°F (35°C)						105°F (41°C)						115°F (46°C)					
			Total Cooling Capacity		Comp Motor kW Input	Sensible To Total Ratio (S/T) Dry Bulb			Total Cooling Capacity		Comp Motor kW Input	Sensible To Total Ratio (S/T) Dry Bulb			Total Cooling Capacity		Comp Motor kW Input	Sensible To Total Ratio (S/T) Dry Bulb			Total Cooling Capacity		Comp Motor kW Input	Sensible To Total Ratio (S/T) Dry Bulb		
	cfm	L/s	kBtuh	kW		75°F 24°C	80°F 27°C	85°F 29°C	kBtuh	kW		75°F 24°C	80°F 27°C	85°F 29°C	kBtuh	kW		75°F 24°C	80°F 27°C	85°F 29°C	kBtuh	kW		75°F 24°C	80°F 27°C	85°F 29°C
13ACC-047 — CR26-60N-F TXV with G60DFV-60C COOLING CAPACITY																										
63°F (17°C)	1470	695	45.4	13.3	2.81	.77	.92	1.00	43.9	12.9	3.17	.78	.93	1.00	42.2	12.4	3.58	.79	.95	1.00	40.4	11.8	4.06	.81	.97	1.00
	1670	790	46.4	13.6	2.82	.80	.96	1.00	44.8	13.1	3.17	.81	.97	1.00	43.2	12.7	3.58	.83	.99	1.00	41.4	12.1	4.06	.85	1.00	1.00
	1870	885	47.4	13.9	2.82	.83	.99	1.00	45.8	13.4	3.18	.85	1.00	1.00	44.2	13.0	3.59	.87	1.00	1.00	42.6	12.5	4.07	.89	1.00	1.00
67°F (19°C)	1470	695	48.3	14.2	2.83	.59	.74	.88	46.5	13.6	3.19	.60	.75	.90	44.7	13.1	3.60	.61	.77	.92	42.7	12.5	4.08	.62	.79	.94
	1670	790	49.0	14.4	2.84	.61	.78	.93	47.3	13.9	3.19	.62	.79	.94	45.4	13.3	3.60	.63	.81	.96	43.4	12.7	4.08	.64	.83	.98
	1870	885	49.8	14.6	2.84	.63	.81	.96	47.9	14.0	3.20	.64	.83	.98	46.0	13.5	3.61	.65	.85	.99	44.0	12.9	4.09	.67	.87	1.00
71°F (22°C)	1470	695	51.6	15.1	2.85	.43	.58	.72	49.7	14.6	3.21	.44	.58	.73	47.7	14.0	3.62	.44	.59	.74	45.7	13.4	4.10	.44	.60	.76
	1670	790	52.4	15.4	2.85	.44	.60	.75	50.5	14.8	3.21	.45	.61	.77	48.4	14.2	3.62	.45	.62	.79	46.3	13.6	4.10	.45	.63	.80
	1870	885	53.0	15.5	2.86	.45	.62	.79	51.1	15.0	3.22	.45	.63	.80	49.0	14.4	3.63	.46	.64	.82	46.8	13.7	4.11	.46	.66	.84
13ACC-047 — CH23-51 TXV with G60UHV-60C/D COOLING CAPACITY																										
63°F (17°C)	1430	675	44.6	13.1	2.81	.76	.91	1.00	43.1	12.6	3.17	.77	.92	1.00	41.4	12.1	3.59	.79	.94	1.00	39.8	11.7	4.07	.80	.95	1.00
	1630	770	45.5	13.3	2.82	.79	.95	1.00	44.0	12.9	3.18	.81	.96	1.00	42.4	12.4	3.59	.82	.97	1.00	40.7	11.9	4.07	.84	.99	1.00
	1830	865	46.4	13.6	2.82	.82	.98	1.00	44.9	13.2	3.18	.84	.99	1.00	43.4	12.7	3.60	.86	1.00	1.00	41.7	12.2	4.07	.88	1.00	1.00
67°F (19°C)	1430	675	47.3	13.9	2.82	.59	.74	.88	45.7	13.4	3.18	.59	.75	.89	43.9	12.9	3.60	.60	.76	.91	42.1	12.3	4.08	.61	.78	.93
	1630	770	48.1	14.1	2.83	.61	.77	.92	46.4	13.6	3.19	.61	.78	.93	44.6	13.1	3.60	.62	.80	.95	42.7	12.5	4.09	.64	.82	.97
	1830	865	48.7	14.3	2.83	.63	.80	.95	47.0	13.8	3.19	.64	.82	.97	45.2	13.2	3.61	.65	.83	.98	43.3	12.7	4.09	.66	.85	.99
71°F (22°C)	1430	675	50.5	14.8	2.84	.43	.57	.71	48.7	14.3	3.20	.44	.58	.72	46.9	13.7	3.61	.44	.59	.74	44.9	13.2	4.09	.44	.60	.76
	1630	770	51.3	15.0	2.85	.44	.59	.75	49.5	14.5	3.21	.44	.60	.76	47.6	14.0	3.62	.45	.61	.78	45.5	13.3	4.10	.45	.62	.79
	1830	865	51.9	15.2	2.85	.45	.61	.78	50.0	14.7	3.21	.45	.63	.80	48.1	14.1	3.62	.46	.64	.81	46.0	13.5	4.11	.46	.65	.83
13ACC-047 — CH23-65 TXV with G60UHV-60C/D COOLING CAPACITY																										
63°F (17°C)	1430	675	45.4	13.3	2.81	.76	.91	1.00	43.9	12.9	3.17	.77	.92	1.00	42.2	12.4	3.58	.78	.94	1.00	40.5	11.9	4.06	.80	.96	1.00
	1630	770	46.4	13.6	2.82	.79	.95	1.00	44.9	13.2	3.18	.81	.96	1.00	43.2	12.7	3.58	.82	.97	1.00	41.5	12.2	4.06	.84	.99	1.00
	1830	865	47.4	13.9	2.82	.82	.98	1.00	45.9	13.5	3.18	.84	.99	1.00	44.2	13.0	3.59	.86	1.00	1.00	42.5	12.5	4.07	.87	1.00	1.00
67°F (19°C)	1430	675	48.3	14.2	2.82	.59	.73	.87	46.6	13.7	3.18	.59	.74	.89	44.7	13.1	3.60	.60	.76	.91	42.8	12.5	4.08	.61	.78	.93
	1630	770	49.1	14.4	2.83	.61	.77	.92	47.4	13.9	3.19	.62	.78	.93	45.5	13.3	3.60	.62	.80	.95	43.5	12.7	4.08	.63	.82	.97
	1830	865	49.8	14.6	2.83	.63	.80	.95	48.0	14.1	3.19	.64	.82	.97	46.1	13.5	3.61	.65	.84	.98	44.2	13.0	4.08	.66	.85	.99
71°F (22°C)	1430	675	51.6	15.1	2.84	.43	.57	.71	49.8	14.6	3.20	.43	.58	.72	47.8	14.0	3.61	.44	.59	.74	45.8	13.4	4.10	.44	.60	.75
	1630	770	52.4	15.4	2.85	.44	.59	.74	50.5	14.8	3.21	.44	.60	.76	48.5	14.2	3.62	.45	.61	.77	46.5	13.6	4.11	.45	.62	.79
	1830	865	53.1	15.6	2.85	.45	.61	.78	51.1	15.0	3.21	.45	.62	.79	49.1	14.4	3.63	.46	.64	.81	47.0	13.8	4.10	.46	.65	.83
13ACC-047 — CH33-48C-2F TXV with G60UHV-60C COOLING CAPACITY																										
63°F (17°C)	1430	675	46.3	13.6	2.81	.75	.90	1.00	44.7	13.1	3.18	.76	.91	1.00	43.0	12.6	3.59	.78	.93	1.00	41.2	12.1	4.07	.80	.95	1.00
	1630	770	47.3	13.9	2.82	.79	.94	1.00	45.7	13.4	3.18	.80	.95	1.00	44.0	12.9	3.59	.82	.97	1.00	42.2	12.4	4.07	.83	.99	1.00
	1830	865	48.3	14.2	2.83	.82	.97	1.00	46.7	13.7	3.18	.83	.98	1.00	45.0	13.2	3.60	.85	1.00	1.00	43.3	12.7	4.08	.87	1.00	1.00
67°F (19°C)	1430	675	49.3	14.4	2.83	.58	.73	.87	47.6	14.0	3.19	.59	.74	.88	45.7	13.4	3.61	.60	.75	.90	43.7	12.8	4.09	.61	.77	.92
	1630	770	50.2	14.7	2.83	.60	.76	.91	48.4	14.2	3.20	.61	.77	.92	46.5	13.6	3.61	.62	.79	.94	44.5	13.0	4.09	.63	.81	.96
	1830	865	50.9	14.9	2.84	.62	.79	.95	49.0	14.4	3.20	.63	.81	.96	47.1	13.8	3.62	.64	.83	.97	45.1	13.2	4.09	.65	.84	.99
71°F (22°C)	1430	675	52.7	15.4	2.85	.43	.57	.70	50.8	14.9	3.21	.43	.57	.71	48.8	14.3	3.63	.44	.58	.73	46.8	13.7	4.11	.44	.59	.75
	1630	770	53.5	15.7	2.85	.44	.59	.74	51.6	15.1	3.21	.44	.60	.75	49.6	14.5	3.63	.45	.61	.77	47.5	13.9	4.11	.45	.62	.79
	1830	865	54.2	15.9	2.86	.45	.61	.77	52.3	15.3	3.22	.45	.62	.79	50.2	14.7	3.64	.45	.63	.80	48.1	14.1	4.11	.46	.64	.83
13ACC-047 — CH33-50/60C-2F TXV with G60UHV-60C COOLING CAPACITY																										
63°F (17°C)	1430	675	46.8	13.7	2.82	.75	.90	1.00	45.1	13.2	3.18	.76	.92	1.00	43.4	12.7	3.59	.78	.93	1.00	41.5	12.2	4.07	.79	.95	1.00
	1630	770	47.8	14.0	2.83	.79	.94	1.00	46.2	13.5	3.19	.80	.95	1.00	44.4	13.0	3.60	.81	.97	1.00	42.5	12.5	4.08	.83	.99	1.00
	1830	865	48.8	14.3	2.83	.82	.97	1.00	47.1	13.8	3.19	.83	.99	1.00	45.4	13.3	3.61	.85	1.00	1.00	43.7	12.8	4.09	.87	1.00	1.00
67°F (19°C)	1430	675	49.9	14.6	2.84	.58	.73	.87	48.0	14.1	3.20	.59	.74	.88	46.1	13.5	3.62	.60	.75	.90	44.2	13.0	4.09	.61	.77	.92
	1630	770	50.7	14.9	2.85	.60	.76	.91	48.9	14.3	3.21	.61	.78	.92	46.9	13.7	3.62	.62	.79	.95	44.9	13.2	4.10	.63	.81	.96
	1830	865	51.5	15.1	2.85	.62	.79	.95	49.6	14.5	3.21	.63	.81	.96	47.6	14.0	3.62	.64	.83	.98	45.5	13.3	4.10	.65	.85	.99
71°F (22°C)	1430	675	53.3	15.6	2.86	.43	.57	.70	51.4	15.1	3.22	.43	.57	.71	49.4	14.5	3.64	.44	.58	.73	47.3	13.9	4.11	.44	.59	.75
	1630	770	54.2	15.9	2.87	.44	.59	.74	52.2	15.3	3.23	.44	.60	.75	50.2	14.7	3.64	.44	.61	.77	48.0	14.1	4.12	.45	.62	.79
	1830	865	55.0	16.1	2.87	.45	.61	.77	52.9	15.5	3.23	.45	.62	.78	50.8	14.9	3.64	.45	.63	.81	48.5	14.2	4.12	.46	.64	.83
13ACC-047 — CB30M-41 TXV COOLING CAPACITY																										
63°F (17°C)	1250	590	42.5	12.5	2.80	.73	.87	.98	41.0	12.0	3.15	.74	.89	.99	39.5	11.6	3.57	.76	.90	1.00	37.8	11.1	4.04	.77	.92	1.00
	1450	685	43.6	12.8	2.80	.76	.91	1.00	42.1	12.3	3.16	.78	.93	1.00	40.5	11.9	3.57	.79	.95	1.00	38.9	11.4	4.05	.81	.96	1.00
	1650	780	44.5	13.0	2.81	.80	.95	1.00	43.1	12.6	3.17	.81	.97	1.00	41.4	12.1	3.57	.83	.98	1.00	39.8	11.7	4.05	.85	.99	1.00
67°F (19°C)	1250	590	45.3	13.3	2.81	.57	.70	.84	43.7	12.8	3.17	.58	.72	.85	42.0	12.3	3.58	.58	.73	.87	40.2	11.8	4.06	.59	.74	.89
	1450	685	46.2	13.5	2.82	.59	.74	.88	44.6	13.1	3.17	.60	.75	.90	42.9	12.6	3.59	.61	.77	.92	41.0	12.0	4.07	.62	.79	.93
	1650	780	47.0	13.8	2.82	.61	.78	.92	45.3	13.3	3.18	.62	.79	.94	43.6	12.8	3.59	.63	.81	.96	41.7	12.2	4.07	.64	.82	.97
71°F (22°C)	1250	590	48.4	14.2	2.83	.43	.55	.68	46.7	13.7	3.19	.43	.56	.69	44.9	13.2	3.60	.43	.57	.70	43.1	12.6	4.08	.43	.58	.72
	1450	685	49.4	14.5	2.84	.43	.57	.71	47.6	14.0	3.19	.44	.58	.73	45.8	13.4	3.61	.44	.59	.74	43.8	12.8	4.09	.44	.60	.76
	1650	780	50.1	14.7	2.84	.44	.60	.75	48.3	14.2	3.20	.45	.61	.77	46.4	13.6	3.61	.45	.62	.78	44.4	13.0	4.09	.45	.63	.80
13ACC-047 — CB31MV-41 TXV COOLING CAPACITY																										
63°F (17°C)	1200	565	42.2	12.4	2.79	.72	.86	.97	40.8	12.0	3.15	.73	.87	.99	39.2	11.5	3.56	.75	.89	1.00	37.6	11.0	4.04	.76	.91	1.00
	1400	660	43.3	12.7	2.80	.76	.90	1.00	41.8	12.3	3.16	.77	.92	1.00	40.3	11.8	3.57	.78	.94	1.00	38.6	11.3	4.05	.80	.95	1.00
	1600	755	44.3	13.0	2.81	.79	.94	1.00	42.8	12.5	3.17	.80	.96	1.00	41.2	12.1	3.57	.82	.97	1.00	39.6	11.6	4.05	.84	.99	1.00
67°F (19°C)	1200	565	45.0	13.2	2.81	.57	.70	.82	43.5	12.7	3.17	.57	.71	.84	41.8	12.3	3.58	.58	.72	.85	40.0	11.7	4.05	.59	.73	.87
	1400	660	46.0	13.5	2.81	.59	.73	.87	44.4	13.0	3.17	.59	.74	.89	42.7	12.5	3.59	.60	.76	.90	40.9	12.0	4.06	.61	.77	.92
	1600	755	46.8	13.7	2.82	.61	.77	.92	45.2	13.2	3.18	.61	.78	.93	43.4	12.7	3.59	.62	.80	.95	41.5	12.2	4.07	.64	.81	.96
71°F (22°C)	1200	565	48.1	14.1	2.83	.43	.55	.67	46.5	13.6	3.18	.43	.55	.68	44.7	13.1	3.60	.43	.56	.69	42.8	12.5	4.07	.43	.57	.71
	1400	660	49.2	14.4	2.83	.43	.57	.71	47.4	13.9	3.19	.43	.58	.72	45.6	13.4	3.60	.44	.59	.73	43.7	12.8	4.08	.44	.59	.75
	1600	755	49.9	14.6	2.84	.44	.59	.74	48.2	14.1	3.20	.44	.60	.76	46.3	13.6	3.61	.45	.61	.77	44.3	13.0	4.09	.45	.62	.79

NOTE - For Temperatures and Capacities not shown in tables, see bulletin - Cooling Unit Rating Table Correction Factor Data in Miscellaneous Engineering Data section.

Entering Wet Bulb Temperature	Total Air Volume		Outdoor Air Temperature Entering Outdoor Coil																							
			85°F (29°C)						95°F (35°C)						105°F (41°C)						115°F (46°C)					
			Total Cooling Capacity		Comp Motor kW Input	Sensible To Total Ratio (S/T) Dry Bulb			Total Cooling Capacity		Comp Motor kW Input	Sensible To Total Ratio (S/T) Dry Bulb			Total Cooling Capacity		Comp Motor kW Input	Sensible To Total Ratio (S/T) Dry Bulb			Total Cooling Capacity		Comp Motor kW Input	Sensible To Total Ratio (S/T) Dry Bulb		
	cfm	L/s	kBtuh	kW		75°F 24°C	80°F 27°C	85°F 29°C	kBtuh	kW		75°F 24°C	80°F 27°C	85°F 29°C	kBtuh	kW		75°F 24°C	80°F 27°C	85°F 29°C	kBtuh	kW		75°F 24°C	80°F 27°C	85°F 29°C
13ACC-047 — CB28UH-042 - CB29M-46 TXV COOLING CAPACITY																										
63°F (17°C)	1350	635	43.3	12.7	2.80	.75	.89	1.00	41.9	12.3	3.15	.76	.91	1.00	40.3	11.8	3.57	.78	.93	1.00	38.7	11.3	4.04	.79	.94	1.00
	1550	730	44.3	13.0	2.80	.78	.93	1.00	42.9	12.6	3.16	.79	.95	1.00	41.3	12.1	3.57	.81	.96	1.00	39.6	11.6	4.05	.83	.98	1.00
	1750	825	45.2	13.2	2.81	.82	.97	1.00	43.8	12.8	3.17	.83	.98	1.00	42.2	12.4	3.58	.85	.99	1.00	40.6	11.9	4.05	.87	1.00	1.00
67°F (19°C)	1350	635	46.1	13.5	2.81	.58	.72	.86	44.5	13.0	3.16	.59	.73	.88	42.8	12.5	3.58	.60	.75	.89	40.9	12.0	4.05	.61	.77	.91
	1550	730	46.9	13.7	2.81	.60	.76	.90	45.2	13.2	3.17	.61	.77	.92	43.5	12.7	3.58	.62	.79	.94	41.6	12.2	4.06	.63	.81	.95
	1750	825	47.6	14.0	2.82	.62	.79	.94	45.9	13.5	3.17	.63	.81	.96	44.1	12.9	3.59	.64	.83	.97	42.2	12.4	4.07	.65	.84	.99
71°F (22°C)	1350	635	49.2	14.4	2.83	.43	.57	.70	47.5	13.9	3.19	.43	.57	.71	45.7	13.4	3.59	.44	.58	.72	43.8	12.8	4.07	.44	.59	.74
	1550	730	50.0	14.7	2.83	.44	.59	.74	48.3	14.2	3.19	.44	.59	.75	46.4	13.6	3.60	.44	.61	.77	44.4	13.0	4.08	.45	.62	.78
	1750	825	50.7	14.9	2.84	.45	.61	.77	48.9	14.3	3.19	.45	.62	.79	46.9	13.7	3.61	.45	.63	.80	44.9	13.2	4.09	.46	.64	.82
13ACC-047 — CB30U-41/46 TXV COOLING CAPACITY																										
63°F (17°C)	1200	565	42.3	12.4	2.79	.72	.86	.97	40.8	12.0	3.15	.73	.87	.98	39.3	11.5	3.56	.74	.89	1.00	37.6	11.0	4.04	.76	.91	1.00
	1400	660	43.4	12.7	2.80	.75	.90	1.00	41.9	12.3	3.16	.77	.92	1.00	40.4	11.8	3.57	.78	.93	1.00	38.7	11.3	4.05	.80	.95	1.00
	1600	755	44.4	13.0	2.81	.79	.94	1.00	42.9	12.6	3.17	.80	.96	1.00	41.3	12.1	3.57	.82	.97	1.00	39.7	11.6	4.05	.84	.99	1.00
67°F (19°C)	1200	565	45.1	13.2	2.81	.57	.70	.83	43.6	12.8	3.17	.57	.71	.84	41.9	12.3	3.58	.58	.72	.85	40.1	11.8	4.05	.59	.73	.87
	1400	660	46.1	13.5	2.81	.59	.73	.87	44.5	13.0	3.17	.59	.74	.89	42.8	12.5	3.59	.60	.76	.90	40.9	12.0	4.06	.61	.78	.92
	1600	755	46.9	13.7	2.82	.61	.77	.91	45.3	13.3	3.18	.62	.78	.93	43.5	12.7	3.59	.62	.80	.95	41.6	12.2	4.07	.63	.81	.96
71°F (22°C)	1200	565	48.2	14.1	2.83	.43	.55	.67	46.6	13.7	3.18	.43	.55	.68	44.8	13.1	3.60	.43	.56	.69	42.9	12.6	4.07	.43	.57	.71
	1400	660	49.3	14.4	2.83	.43	.57	.71	47.5	13.9	3.19	.43	.58	.72	45.7	13.4	3.60	.44	.59	.73	43.7	12.8	4.08	.44	.60	.75
	1600	755	50.0	14.7	2.84	.44	.59	.74	48.3	14.2	3.20	.44	.60	.76	46.4	13.6	3.61	.45	.61	.77	44.4	13.0	4.09	.45	.62	.79
13ACC-047 — CB28UH-048 - CB29M-51 TXV COOLING CAPACITY																										
63°F (17°C)	1250	590	43.9	12.9	2.80	.73	.87	.98	42.4	12.4	3.16	.74	.88	.99	40.8	12.0	3.58	.75	.90	1.00	39.1	11.5	4.05	.77	.92	1.00
	1450	685	45.1	13.2	2.81	.77	.91	1.00	43.5	12.7	3.17	.78	.93	1.00	41.9	12.3	3.58	.79	.95	1.00	40.2	11.8	4.05	.81	.96	1.00
	1650	780	46.0	13.5	2.82	.80	.95	1.00	44.5	13.0	3.18	.81	.97	1.00	42.8	12.5	3.58	.83	.98	1.00	41.2	12.1	4.06	.85	.99	1.00
67°F (19°C)	1250	590	46.8	13.7	2.81	.57	.71	.84	45.2	13.2	3.17	.58	.72	.85	43.4	12.7	3.59	.58	.73	.87	41.6	12.2	4.07	.59	.74	.89
	1450	685	47.8	14.0	2.82	.59	.74	.88	46.1	13.5	3.18	.60	.75	.90	44.3	13.0	3.60	.61	.77	.91	42.4	12.4	4.07	.62	.79	.93
	1650	780	48.6	14.2	2.83	.61	.78	.92	46.9	13.7	3.19	.62	.79	.94	45.0	13.2	3.60	.63	.81	.96	43.1	12.6	4.08	.64	.82	.97
71°F (22°C)	1250	590	50.1	14.7	2.84	.43	.55	.68	48.3	14.2	3.19	.43	.56	.69	46.5	13.6	3.60	.43	.57	.70	44.5	13.0	4.09	.43	.58	.72
	1450	685	51.0	14.9	2.84	.43	.57	.72	49.2	14.4	3.20	.44	.58	.73	47.3	13.9	3.62	.44	.59	.74	45.3	13.3	4.09	.44	.60	.76
	1650	780	51.8	15.2	2.84	.44	.60	.75	50.0	14.7	3.20	.44	.61	.77	48.0	14.1	3.62	.45	.62	.78	45.9	13.5	4.10	.45	.63	.80
13ACC-047 — CB28UH-060 - CB29M-65 TXV COOLING CAPACITY																										
63°F (17°C)	1400	660	44.8	13.1	2.81	.76	.90	1.00	43.3	12.7	3.17	.77	.92	1.00	41.6	12.2	3.58	.78	.94	1.00	39.9	11.7	4.06	.80	.95	1.00
	1600	755	45.8	13.4	2.81	.79	.94	1.00	44.3	13.0	3.17	.80	.96	1.00	42.6	12.5	3.58	.82	.97	1.00	40.9	12.0	4.06	.84	.99	1.00
	1800	850	46.7	13.7	2.82	.82	.98	1.00	45.2	13.2	3.17	.84	.99	1.00	43.6	12.8	3.59	.85	1.00	1.00	41.9	12.3	4.07	.87	1.00	1.00
67°F (19°C)	1400	660	47.6	14.0	2.82	.59	.73	.87	45.9	13.5	3.18	.59	.75	.89	44.1	12.9	3.60	.60	.76	.90	42.2	12.4	4.07	.61	.77	.92
	1600	755	48.4	14.2	2.82	.61	.77	.91	46.7	13.7	3.18	.61	.78	.93	44.9	13.2	3.60	.62	.80	.95	42.9	12.6	4.08	.64	.82	.97
	1800	850	49.1	14.4	2.83	.63	.80	.95	47.3	13.9	3.19	.64	.82	.96	45.5	13.3	3.61	.65	.83	.98	43.5	12.7	4.08	.66	.85	.99
71°F (22°C)	1400	660	50.8	14.9	2.84	.43	.57	.71	49.0	14.4	3.20	.43	.58	.72	47.1	13.8	3.61	.44	.59	.73	45.1	13.2	4.09	.44	.60	.75
	1600	755	51.6	15.1	2.84	.44	.59	.74	49.8	14.6	3.20	.44	.60	.76	47.8	14.0	3.62	.45	.61	.77	45.8	13.4	4.10	.45	.62	.79
	1800	850	52.3	15.3	2.85	.45	.61	.78	50.4	14.8	3.21	.45	.62	.79	48.4	14.2	3.62	.46	.63	.81	46.3	13.6	4.10	.46	.65	.83
13ACC-047 — CB30U-51 TXV COOLING CAPACITY																										
63°F (17°C)	1400	660	45.5	13.3	2.82	.75	.90	1.00	43.9	12.9	3.17	.77	.92	1.00	42.2	12.4	3.58	.78	.93	1.00	40.4	11.8	4.06	.80	.95	1.00
	1600	755	46.6	13.7	2.82	.79	.94	1.00	44.9	13.2	3.18	.80	.96	1.00	43.2	12.7	3.59	.82	.98	1.00	41.4	12.1	4.07	.84	.99	1.00
	1800	850	47.6	14.0	2.83	.82	.98	1.00	45.9	13.5	3.18	.84	.99	1.00	44.2	13.0	3.60	.85	1.00	1.00	42.6	12.5	4.07	.87	1.00	1.00
67°F (19°C)	1400	660	48.5	14.2	2.83	.58	.73	.87	46.7	13.7	3.19	.59	.74	.88	44.8	13.1	3.60	.60	.76	.90	42.9	12.6	4.08	.61	.77	.92
	1600	755	49.4	14.5	2.84	.60	.76	.91	47.6	14.0	3.19	.61	.78	.93	45.6	13.4	3.61	.62	.80	.95	43.6	12.8	4.09	.63	.81	.97
	1800	850	50.1	14.7	2.84	.62	.80	.95	48.3	14.2	3.20	.63	.81	.97	46.3	13.6	3.61	.65	.83	.99	44.2	13.0	4.09	.66	.85	1.00
71°F (22°C)	1400	660	51.8	15.2	2.85	.43	.57	.70	49.9	14.6	3.21	.43	.58	.72	48.0	14.1	3.62	.44	.58	.73	45.9	13.5	4.10	.44	.59	.75
	1600	755	52.7	15.4	2.86	.44	.59	.74	50.8	14.9	3.22	.44	.60	.75	48.7	14.3	3.63	.44	.61	.77	46.6	13.7	4.11	.45	.62	.79
	1800	850	53.5	15.7	2.86	.45	.61	.78	51.5	15.1	3.22	.45	.62	.79	49.4	14.5	3.63	.46	.63	.81	47.1	13.8	4.11	.46	.65	.83
13ACC-047 — CB30M-51 TXV COOLING CAPACITY																										
63°F (17°C)	1400	660	46.0	13.5	2.82	.75	.90	1.00	44.3	13.0	3.18	.76	.92	1.00	42.6	12.5	3.59	.78	.93	1.00	40.8	12.0	4.07	.80	.95	1.00
	1600	755	47.1	13.8	2.83	.79	.94	1.00	45.4	13.3	3.18	.80	.96	1.00	43.6	12.8	3.60	.82	.98	1.00	41.8	12.3	4.08	.84	.99	1.00
	1800	850	48.0	14.1	2.83	.82	.98	1.00	46.4	13.6	3.19	.84	.99	1.00	44.7	13.1	3.61	.86	1.00	1.00	43.0	12.6	4.08	.88	1.00	1.00
67°F (19°C)	1400	660	48.9	14.3	2.84	.58	.73	.87	47.2	13.8	3.20	.59	.74	.88	45.3	13.3	3.61	.60	.75	.90	43.3	12.7	4.09	.61	.77	.92
	1600	755	49.9	14.6	2.84	.60	.76	.91	48.0	14.1	3.20	.61	.78	.93	46.1	13.5	3.62	.62	.79	.95	44.1	12.9	4.10	.63	.81	.97
	1800	850	50.6	14.8	2.85	.62	.80	.95	48.8	14.3	3.21	.63	.81	.97	46.8	13.7	3.62	.64	.83	.99	44.7	13.1	4.10	.66	.85	1.00
71°F (22°C)	1400	660	52.3	15.3	2.86	.43	.57	.70	50.5	14.8	3.22	.43	.57	.71	48.4	14.2	3.63	.44	.58	.73	46.4	13.6	4.11	.44	.59	.75
	1600	755	53.3	15.6	2.86	.44	.59	.74	51.3	15.0	3.23	.44	.60	.75	49.2	14.4	3.64	.45	.61	.77	47.1	13.8	4.12	.45	.62	.79
	1800	850	54.0	15.8	2.87	.45	.61	.77	52.0	15.2	3.23	.45	.62	.79	49.9	14.6	3.64	.45	.63	.81	47.6	14.0	4.12	.46	.65	.83
13ACC-047 — CB30M-46 TXV COOLING CAPACITY																										
63°F (17°C)	1200	565	45.9	13.5	2.82	.72	.86	.97	44.4	13.0	3.18	.73	.87	.98	42.7	12.5	3.60	.74	.89	1.00	40.9	12.0	4.08	.76	.91	1.00
	1400	660	47.2	13.8	2.83	.76	.90	1.00	45.6	13.4	3.19	.77	.92	1.00	43.8	12.8	3.61	.78	.94	1.00	42.0	12.3	4.09	.80	.95	1.00
	1600	755	48.2	14.1	2.84	.79	.94	1.00	46.6	13.7	3.20	.80	.96	1.00	44.9	13.2	3.61	.82	.97	1.00	43.1	12.6	4.09	.84	.99	1.00
67°F (19°C)	1200	565	49.0	14.4	2.84	.57	.70	.82	47.3	13.9	3.20	.57	.71	.84	45.5	13.3	3.61	.58	.72	.85	43.6	12.8	4.09	.59	.73	.87
	1400	660	50.1	14.7	2.84	.59	.73	.87	48.4	14.2	3.20	.59	.74	.89	46.5	13.6	3.62	.60	.76	.90	44.5	13.0	4.10	.61	.78	.92
	1600	755	51.0	14.9	2.85	.61	.77	.91	49.2	14.4	3.21	.61	.78	.93	47.2	13.8	3.63	.62	.80	.95	45.2	13.2	4.11	.63	.81	.97
71°F (22°C)	1200	565	52.4	15.4	2.86	.43	.55	.67	50.6	14.8	3.21	.43	.55	.68	48.7	14.3	3.63	.43	.56	.69	46.6	13.7	4.11	.43	.57	.71
	1400	660	53.5	15.7	2.86	.43	.57	.71	51.7	15.2	3.22	.43	.58	.72	49.7	14.6	3.64	.44	.59	.73	47.5	13.9	4.12	.44	.60	.75
	1600	755	54.4	15.9	2.86	.44	.59	.74	52.5	15.4	3.23	.44	.60	.76	50.4	14.8	3.65	.45	.61	.77	48.2	14.1	4.13	.45	.62	.79

NOTE - For Temperatures and Capacities not shown in tables, see bulletin - Cooling Unit Rating Table Correction Factor Data in Miscellaneous Engineering Data section.

Entering Wet Bulb Temperature	Total Air Volume		Outdoor Air Temperature Entering Outdoor Coil 85°F (29°C)						95°F (35°C)						105°F (41°C)						115°F (46°C)					
			Total Cooling Capacity		Comp Motor kW Input	Sensible To Total Ratio (S/T) Dry Bulb			Total Cooling Capacity		Comp Motor kW Input	Sensible To Total Ratio (S/T) Dry Bulb			Total Cooling Capacity		Comp Motor kW Input	Sensible To Total Ratio (S/T) Dry Bulb			Total Cooling Capacity		Comp Motor kW Input	Sensible To Total Ratio (S/T) Dry Bulb		
	cfm	L/s	kBtuh	kW		75°F 24°C	80°F 27°C	85°F 29°C	kBtuh	kW		75°F 24°C	80°F 27°C	85°F 29°C	kBtuh	kW		75°F 24°C	80°F 27°C	85°F 29°C	kBtuh	kW		75°F 24°C	80°F 27°C	85°F 29°C
13ACC-047 — CB30M-65 TXV COOLING CAPACITY																										
63°F (17°C)	1400	660	46.6	13.7	2.82	.75	.90	1.00	45.0	13.2	3.18	.77	.92	1.00	43.2	12.7	3.59	.78	.94	1.00	41.4	12.1	4.06	.80	.95	1.00
	1600	755	47.7	14.0	2.82	.79	.94	1.00	46.0	13.5	3.18	.80	.96	1.00	44.2	13.0	3.60	.82	.98	1.00	42.4	12.4	4.08	.84	.99	1.00
	1800	850	48.7	14.3	2.83	.82	.98	1.00	47.0	13.8	3.19	.84	.99	1.00	45.3	13.3	3.60	.86	1.00	1.00	43.7	12.8	4.08	.87	1.00	1.00
67°F (19°C)	1400	660	49.6	14.5	2.84	.58	.73	.87	47.8	14.0	3.20	.59	.74	.88	45.9	13.5	3.61	.60	.76	.90	43.9	12.9	4.09	.61	.77	.92
	1600	755	50.6	14.8	2.84	.60	.76	.91	48.7	14.3	3.20	.61	.78	.93	46.8	13.7	3.61	.62	.79	.95	44.7	13.1	4.10	.63	.81	.97
	1800	850	51.3	15.0	2.85	.63	.80	.95	49.5	14.5	3.21	.63	.81	.97	47.4	13.9	3.62	.65	.83	.99	45.3	13.3	4.10	.66	.85	1.00
71°F (22°C)	1400	660	53.1	15.6	2.86	.43	.57	.70	51.2	15.0	3.22	.43	.57	.71	49.1	14.4	3.63	.44	.58	.73	47.0	13.8	4.11	.44	.59	.75
	1600	755	54.0	15.8	2.86	.44	.59	.74	52.0	15.2	3.22	.44	.60	.75	49.9	14.6	3.64	.45	.61	.77	47.8	14.0	4.11	.45	.62	.79
	1800	850	54.8	16.1	2.87	.45	.61	.78	52.7	15.4	3.23	.45	.62	.79	50.6	14.8	3.64	.45	.63	.81	48.3	14.2	4.12	.46	.65	.83
13ACC-047 — CB30U-65 TXV COOLING CAPACITY																										
63°F (17°C)	1400	660	46.6	13.7	2.83	.75	.90	1.00	45.0	13.2	3.18	.77	.92	1.00	43.2	12.7	3.60	.78	.94	1.00	41.4	12.1	4.07	.80	.95	1.00
	1600	755	47.7	14.0	2.83	.79	.94	1.00	46.0	13.5	3.19	.80	.96	1.00	44.2	13.0	3.60	.82	.98	1.00	42.4	12.4	4.08	.84	.99	1.00
	1800	850	48.7	14.3	2.84	.82	.98	1.00	47.0	13.8	3.20	.84	.99	1.00	45.3	13.3	3.61	.86	1.00	1.00	43.7	12.8	4.09	.87	1.00	1.00
67°F (19°C)	1400	660	49.6	14.5	2.84	.58	.73	.87	47.8	14.0	3.20	.59	.74	.88	45.9	13.5	3.62	.60	.76	.90	43.9	12.9	4.09	.61	.77	.92
	1600	755	50.6	14.8	2.85	.60	.76	.91	48.7	14.3	3.21	.61	.78	.93	46.8	13.7	3.62	.62	.79	.95	44.7	13.1	4.10	.63	.81	.97
	1800	850	51.3	15.0	2.85	.63	.80	.95	49.5	14.5	3.21	.63	.81	.97	47.4	13.9	3.63	.65	.83	.99	45.3	13.3	4.10	.66	.85	1.00
71°F (22°C)	1400	660	53.1	15.6	2.86	.43	.57	.70	51.2	15.0	3.22	.43	.57	.71	49.1	14.4	3.64	.44	.58	.73	47.0	13.8	4.12	.44	.59	.75
	1600	755	54.0	15.8	2.87	.44	.59	.74	52.0	15.2	3.23	.44	.60	.75	49.9	14.6	3.64	.45	.61	.77	47.8	14.0	4.12	.45	.62	.79
	1800	850	54.8	16.1	2.87	.45	.61	.78	52.7	15.4	3.23	.45	.62	.79	50.6	14.8	3.65	.45	.63	.81	48.3	14.2	4.13	.46	.65	.83
13ACC-047 — CB31MV-51 TXV COOLING CAPACITY																										
63°F (17°C)	1425	675	46.4	13.6	2.82	.76	.91	1.00	44.7	13.1	3.18	.77	.92	1.00	43.0	12.6	3.59	.79	.94	1.00	41.2	12.1	4.06	.80	.96	1.00
	1625	765	47.5	13.9	2.82	.79	.95	1.00	45.8	13.4	3.18	.81	.97	1.00	44.0	12.9	3.60	.82	.98	1.00	42.2	12.4	4.08	.84	1.00	1.00
	1825	860	48.5	14.2	2.83	.83	.98	1.00	46.8	13.7	3.19	.84	.99	1.00	45.1	13.2	3.60	.86	1.00	1.00	43.5	12.7	4.08	.88	1.00	1.00
67°F (19°C)	1425	675	49.4	14.5	2.84	.59	.73	.87	47.6	14.0	3.20	.59	.75	.89	45.7	13.4	3.61	.60	.76	.91	43.7	12.8	4.09	.61	.78	.93
	1625	765	50.3	14.7	2.84	.61	.77	.92	48.4	14.2	3.20	.62	.78	.93	46.5	13.6	3.61	.63	.80	.95	44.4	13.0	4.10	.64	.82	.97
	1825	860	51.0	14.9	2.85	.63	.80	.96	49.1	14.4	3.21	.64	.82	.97	47.1	13.8	3.62	.65	.84	.99	45.0	13.2	4.10	.66	.86	1.00
71°F (22°C)	1425	675	52.8	15.5	2.86	.43	.57	.71	50.9	14.9	3.22	.43	.58	.72	48.9	14.3	3.63	.44	.59	.73	46.8	13.7	4.11	.44	.60	.75
	1625	765	53.7	15.7	2.86	.44	.59	.74	51.7	15.2	3.22	.44	.60	.76	49.6	14.5	3.64	.45	.61	.77	47.5	13.9	4.12	.45	.62	.79
	1825	860	54.4	15.9	2.87	.45	.62	.78	52.4	15.4	3.23	.45	.63	.80	50.2	14.7	3.64	.46	.64	.82	48.0	14.1	4.12	.46	.65	.84
13ACC-047 — CB31MV-65 TXV COOLING CAPACITY																										
63°F (17°C)	1425	675	46.8	13.7	2.83	.76	.91	1.00	45.1	13.2	3.18	.77	.92	1.00	43.4	12.7	3.60	.79	.94	1.00	41.5	12.2	4.07	.80	.96	1.00
	1625	765	47.9	14.0	2.83	.79	.95	1.00	46.2	13.5	3.19	.81	.97	1.00	44.4	13.0	3.61	.82	.98	1.00	42.6	12.5	4.08	.84	1.00	1.00
	1825	860	48.9	14.3	2.84	.83	.98	1.00	47.2	13.8	3.20	.84	.99	1.00	45.5	13.3	3.61	.86	1.00	1.00	43.8	12.8	4.09	.88	1.00	1.00
67°F (19°C)	1425	675	49.8	14.6	2.84	.59	.73	.87	48.0	14.1	3.20	.59	.75	.89	46.1	13.5	3.62	.60	.76	.91	44.1	12.9	4.09	.61	.78	.93
	1625	765	50.7	14.9	2.85	.61	.77	.92	48.9	14.3	3.21	.61	.78	.94	46.9	13.7	3.62	.62	.80	.95	44.8	13.1	4.11	.64	.82	.97
	1825	860	51.5	15.1	2.85	.63	.80	.96	49.6	14.5	3.22	.64	.82	.97	47.5	13.9	3.63	.65	.84	.99	45.4	13.3	4.11	.66	.86	1.00
71°F (22°C)	1425	675	53.3	15.6	2.86	.43	.57	.71	51.3	15.0	3.22	.43	.58	.72	49.3	14.4	3.64	.44	.59	.74	47.2	13.8	4.12	.44	.60	.75
	1625	765	54.2	15.9	2.87	.44	.59	.74	52.2	15.3	3.23	.44	.60	.76	50.1	14.7	3.64	.45	.61	.78	47.9	14.0	4.12	.45	.62	.80
	1825	860	54.9	16.1	2.87	.45	.62	.78	52.8	15.5	3.24	.45	.63	.80	50.7	14.9	3.65	.46	.64	.81	48.4	14.2	4.13	.46	.65	.84
13ACC-047 — CVP10-51/EC10Q4 TXV COOLING CAPACITY																										
63°F (17°C)	1400	660	46.3	13.6	3020	.72	.86	.98	44.7	13.1	3410	.73	.88	.99	42.9	12.6	3850	.75	.89	1.00	41.1	12.0	4350	.76	.91	1.00
	1600	755	47.4	13.9	3030	.75	.90	1.00	45.7	13.4	3420	.77	.92	1.00	43.9	12.9	3860	.78	.94	1.00	42.1	12.3	4360	.80	.95	1.00
	1800	850	48.4	14.2	3040	.78	.94	1.00	46.7	13.7	3430	.80	.95	1.00	44.9	13.2	3870	.82	.97	1.00	43.0	12.6	4370	.83	.99	1.00
67°F (19°C)	1400	660	49.4	14.5	3050	.57	.70	.83	47.6	14.0	3440	.57	.71	.84	45.7	13.4	3880	.58	.72	.86	43.7	12.8	4380	.59	.74	.88
	1600	755	50.3	14.7	3060	.58	.73	.87	48.5	14.2	3450	.59	.74	.89	46.6	13.7	3890	.60	.76	.91	44.5	13.0	4390	.61	.77	.93
	1800	850	51.2	15.0	3070	.60	.76	.91	49.2	14.4	3460	.61	.78	.93	47.2	13.8	3900	.62	.79	.94	45.2	13.2	4400	.63	.81	.96
71°F (22°C)	1400	660	52.6	15.4	3090	.43	.55	.67	50.8	14.9	3480	.43	.56	.68	48.8	14.3	3920	.43	.56	.70	46.7	13.7	4420	.43	.57	.71
	1600	755	53.6	15.7	3100	.43	.57	.71	51.7	15.2	3490	.43	.58	.72	49.6	14.5	3930	.44	.59	.73	47.5	13.9	4430	.44	.60	.75
	1800	850	54.4	15.9	3110	.44	.59	.74	52.4	15.4	3500	.44	.60	.75	50.3	14.7	3940	.44	.61	.77	48.1	14.1	4440	.45	.62	.79
13ACC-047 — CVP10-65/EC10Q5 TXV COOLING CAPACITY																										
63°F (17°C)	1400	660	47.9	14.0	3030	.73	.87	.99	46.2	13.5	3410	.75	.89	1.00	44.4	13.0	3850	.76	.91	1.00	42.5	12.5	4350	.77	.92	1.00
	1600	755	49.0	14.4	3040	.77	.92	1.00	47.3	13.9	3420	.78	.93	1.00	45.4	13.3	3860	.79	.95	1.00	43.5	12.7	4360	.81	.97	1.00
	1800	850	50.1	14.7	3040	.80	.95	1.00	48.3	14.2	3430	.81	.97	1.00	46.5	13.6	3870	.83	.98	1.00	44.6	13.1	4370	.85	1.00	1.00
67°F (19°C)	1400	660	50.9	14.9	3050	.57	.71	.84	49.0	14.4	3440	.58	.72	.86	47.1	13.8	3880	.59	.73	.87	45.1	13.2	4380	.60	.75	.89
	1600	755	51.9	15.2	3060	.59	.74	.88	50.0	14.7	3450	.60	.76	.90	48.0	14.1	3890	.61	.77	.92	45.9	13.5	4390	.62	.79	.94
	1800	850	52.7	15.4	3070	.61	.78	.92	50.8	14.9	3460	.62	.79	.94	48.7	14.3	3900	.63	.81	.96	46.6	13.7	4410	.64	.83	.98
71°F (22°C)	1400	660	54.3	15.9	3090	.43	.56	.68	52.3	15.3	3480	.43	.56	.69	50.3	14.7	3920	.43	.57	.71	48.1	14.1	4420	.44	.58	.72
	1600	755	55.3	16.2	3110	.43	.58	.72	53.3	15.6	3490	.44	.58	.73	51.1	15.0	3940	.44	.59	.75	48.9	14.3	4430	.44	.61	.76
	1800	850	56.1	16.4	3120	.44	.60	.75	54.0	15.8	3500	.44	.61	.77	51.8	15.2	3950	.45	.62	.79	49.5	14.5	4450	.45	.63	.80

RATINGS 4 TON (-048)

13ACC-048 — C26-46 TXV and RFC COOLING CAPACITY																										
63°F (17°C)	1400	660	45.1	13.2	3.10	.73	.88	.99	43.6	12.8	3.49	.75	.89	1.00	41.9	12.3	3.95	.76	.91	1.00	40.2	11.8	4.49	.77	.93	1.00
	1600	755	46.1	13.5	3.11	.77	.92	1.00	44.6	13.1	3.50	.78	.93	1.00	42.9	12.6	3.96	.80	.95	1.00	41.1	12.0	4.49	.81	.97	1.00
	1800	850	47.0	13.8	3.12	.80	.96	1.00	45.5	13.3	3.51	.81	.97	1.00	43.8	12.8	3.97	.83	.99	1.00	42.1	12.3	4.49	.85	1.00	1.00
67°F (19°C)	1400	660	47.8	14.0	3.12	.57	.71	.85	46.2	13.5	3.51	.58	.72	.86	44.4	13.0	3.96	.59	.73	.88	42.5	12.5	4.49	.59	.75	.90
	1600	755	48.7	14.3	3.13	.59	.74	.89	47.0	13.8	3.52	.60	.76	.91	45.2	13.2	3.97	.61	.77	.92	43.2	12.7	4.51	.62	.79	.95
	1800	850	49.4	14.5	3.14	.61	.78	.93	47.7	14.0	3.53	.62	.79	.95	45.8	13.4	3.98	.63	.81	.96	43.8	12.8	4.51	.64	.83	.98
71°F (22°C)	1400	660	51.0	14.9	3.16	.43	.56	.69	49.2	14.4	3.54	.43	.56	.70	47.3	13.9	3.99	.43	.57	.71	45.3	13.3	4.51	.43	.58	.73
	1600	755	51.8	15.2	3.17	.43	.58	.72	50.0	14.7	3.55	.44	.58	.73	48.1	14.1	4.00	.44	.59	.75	46.0	13.5	4.53	.44	.60	.76
	1800	850	52.5	15.4	3.17	.44	.60	.76	50.6	14.8	3.56	.44	.61	.77	48.7	14.3	4.01	.45	.62	.79	46.5	13.6	4.53	.45	.63	.81

NOTE - For Temperatures and Capacities not shown in tables, see bulletin - Cooling Unit Rating Table Correction Factor Data in Miscellaneous Engineering Data section.

Entering Wet Bulb Temperature	Total Air Volume		Outdoor Air Temperature Entering Outdoor Coil																							
			85°F (29°C)						95°F (35°C)						105°F (41°C)						115°F (46°C)					
			Total Cooling Capacity		Comp Motor kW Input	Sensible To Total Ratio (S/T) Dry Bulb			Total Cooling Capacity		Comp Motor kW Input	Sensible To Total Ratio (S/T) Dry Bulb			Total Cooling Capacity		Comp Motor kW Input	Sensible To Total Ratio (S/T) Dry Bulb			Total Cooling Capacity		Comp Motor kW Input	Sensible To Total Ratio (S/T) Dry Bulb		
	cfm	L/s	kBtuh	kW		75°F 24°C	80°F 27°C	85°F 29°C	kBtuh	kW		75°F 24°C	80°F 27°C	85°F 29°C	kBtuh	kW		75°F 24°C	80°F 27°C	85°F 29°C	kBtuh	kW		75°F 24°C	80°F 27°C	85°F 29°C
13ACC-048 — C26-41 TXV and RFC COOLING CAPACITY																										
63°F (17°C)	1400	660	45.7	13.4	3.11	.74	.88	.99	44.2	13.0	3.50	.75	.89	1.00	42.5	12.5	3.96	.76	.91	1.00	40.8	12.0	4.50	.77	.93	1.00
	1600	755	46.7	13.7	3.12	.77	.92	1.00	45.2	13.2	3.51	.78	.94	1.00	43.5	12.7	3.97	.80	.95	1.00	41.7	12.2	4.51	.81	.97	1.00
	1800	850	47.6	14.0	3.12	.80	.96	1.00	46.0	13.5	3.52	.82	.97	1.00	44.4	13.0	3.98	.83	.99	1.00	42.7	12.5	4.51	.85	1.00	1.00
67°F (19°C)	1400	660	48.4	14.2	3.13	.57	.71	.85	46.7	13.7	3.52	.58	.73	.86	45.0	13.2	3.97	.59	.74	.88	43.1	12.6	4.51	.59	.75	.90
	1600	755	49.2	14.4	3.13	.59	.75	.89	47.5	13.9	3.52	.60	.76	.91	45.7	13.4	3.98	.61	.77	.93	43.8	12.8	4.51	.62	.79	.95
	1800	850	49.9	14.6	3.14	.61	.78	.93	48.2	14.1	3.53	.62	.79	.95	46.4	13.6	3.99	.63	.81	.96	44.4	13.0	4.52	.64	.83	.98
71°F (22°C)	1400	660	51.5	15.1	3.16	.42	.56	.69	49.8	14.6	3.55	.43	.56	.70	47.9	14.0	4.00	.43	.57	.71	45.9	13.5	4.53	.43	.58	.73
	1600	755	52.3	15.3	3.17	.43	.58	.72	50.6	14.8	3.56	.44	.59	.74	48.6	14.2	4.01	.44	.60	.75	46.6	13.7	4.54	.44	.61	.77
	1800	850	53.0	15.5	3.17	.44	.60	.76	51.2	15.0	3.56	.44	.61	.77	49.2	14.4	4.01	.45	.62	.79	47.1	13.8	4.54	.45	.63	.81
13ACC-048 — C23-51 TXV and RFC COOLING CAPACITY																										
63°F (17°C)	1400	660	46.9	13.7	3.12	.73	.87	.98	45.4	13.3	3.52	.74	.88	.99	43.7	12.8	3.98	.75	.90	1.00	41.9	12.3	4.52	.76	.92	1.00
	1600	755	48.0	14.1	3.13	.76	.91	1.00	46.4	13.6	3.53	.77	.92	1.00	44.7	13.1	3.99	.78	.94	1.00	42.9	12.6	4.53	.80	.96	1.00
	1800	850	48.9	14.3	3.14	.79	.94	1.00	47.3	13.9	3.53	.80	.96	1.00	45.6	13.4	3.99	.82	.97	1.00	43.8	12.8	4.54	.84	.99	1.00
67°F (19°C)	1400	660	49.9	14.6	3.14	.57	.70	.84	48.2	14.1	3.54	.57	.71	.85	46.4	13.6	4.00	.58	.73	.87	44.5	13.0	4.53	.59	.74	.89
	1600	755	50.8	14.9	3.15	.58	.73	.88	49.0	14.4	3.54	.59	.75	.89	47.2	13.8	4.00	.60	.76	.91	45.2	13.2	4.53	.61	.78	.93
	1800	850	51.5	15.1	3.16	.60	.77	.92	49.8	14.6	3.55	.61	.78	.93	47.9	14.0	4.00	.62	.80	.95	45.8	13.4	4.54	.63	.81	.97
71°F (22°C)	1400	660	53.2	15.6	3.17	.42	.55	.68	51.4	15.1	3.57	.43	.56	.69	49.5	14.5	4.02	.43	.56	.70	47.4	13.9	4.55	.43	.57	.72
	1600	755	54.1	15.9	3.18	.43	.57	.71	52.2	15.3	3.57	.43	.58	.72	50.3	14.7	4.03	.43	.59	.74	48.1	14.1	4.56	.44	.60	.75
	1800	850	54.8	16.1	3.19	.44	.59	.74	52.9	15.5	3.58	.44	.60	.76	50.9	14.9	4.03	.44	.61	.77	48.7	14.3	4.56	.45	.62	.79
13ACC-048 — C26-51/65 TXV and RFC COOLING CAPACITY																										
63°F (17°C)	1400	660	46.9	13.7	3.11	.73	.88	.99	45.3	13.3	3.50	.74	.89	1.00	43.6	12.8	3.96	.75	.91	1.00	41.7	12.2	4.49	.77	.93	1.00
	1600	755	48.0	14.1	3.12	.77	.92	1.00	46.4	13.6	3.51	.78	.94	1.00	44.6	13.1	3.97	.79	.95	1.00	42.8	12.5	4.49	.81	.97	1.00
	1800	850	49.0	14.4	3.13	.80	.96	1.00	47.3	13.9	3.52	.81	.97	1.00	45.6	13.4	3.97	.83	.99	1.00	43.8	12.8	4.50	.85	1.00	1.00
67°F (19°C)	1400	660	49.9	14.6	3.14	.57	.71	.84	48.1	14.1	3.52	.58	.72	.86	46.3	13.6	3.98	.59	.73	.88	44.2	13.0	4.51	.59	.75	.90
	1600	755	50.8	14.9	3.15	.59	.74	.89	49.0	14.4	3.54	.60	.75	.90	47.1	13.8	3.99	.61	.77	.92	45.0	13.2	4.52	.62	.79	.95
	1800	850	51.6	15.1	3.16	.61	.77	.93	49.7	14.6	3.54	.62	.79	.94	47.8	14.0	4.00	.63	.81	.96	45.7	13.4	4.51	.64	.83	.98
71°F (22°C)	1400	660	53.2	15.6	3.17	.42	.55	.68	51.3	15.0	3.56	.43	.56	.69	49.3	14.4	4.01	.43	.57	.71	47.2	13.8	4.53	.43	.58	.72
	1600	755	54.1	15.9	3.19	.43	.57	.72	52.2	15.3	3.57	.43	.58	.73	50.1	14.7	4.02	.44	.59	.75	47.9	14.0	4.54	.44	.60	.76
	1800	850	54.8	16.1	3.19	.44	.60	.75	52.9	15.5	3.58	.44	.60	.77	50.8	14.9	4.03	.45	.62	.78	48.5	14.2	4.54	.45	.63	.80
13ACC-048 — C33-48B/C TXV and RFC COOLING CAPACITY																										
63°F (17°C)	1400	660	47.3	13.9	3.11	.72	.87	.98	45.8	13.4	3.51	.73	.88	.99	44.1	12.9	3.98	.75	.90	1.00	42.3	12.4	4.52	.76	.91	1.00
	1600	755	48.4	14.2	3.12	.75	.90	1.00	46.8	13.7	3.52	.76	.92	1.00	45.1	13.2	3.98	.78	.94	1.00	43.2	12.7	4.53	.80	.95	1.00
	1800	850	49.3	14.4	3.13	.78	.94	1.00	47.6	14.0	3.53	.80	.96	1.00	45.9	13.5	3.99	.81	.97	1.00	44.1	12.9	4.54	.83	.98	1.00
67°F (19°C)	1400	660	50.3	14.7	3.13	.56	.70	.83	48.7	14.3	3.53	.57	.71	.85	46.8	13.7	3.99	.58	.72	.86	44.9	13.2	4.52	.59	.73	.88
	1600	755	51.2	15.0	3.14	.58	.73	.87	49.5	14.5	3.54	.59	.74	.89	47.6	14.0	3.99	.60	.76	.91	45.6	13.4	4.53	.61	.77	.93
	1800	850	51.9	15.2	3.15	.60	.76	.91	50.2	14.7	3.54	.61	.77	.93	48.3	14.2	4.00	.61	.79	.94	46.2	13.5	4.54	.63	.81	.96
71°F (22°C)	1400	660	53.6	15.7	3.16	.42	.55	.67	51.8	15.2	3.56	.42	.55	.68	49.9	14.6	4.02	.43	.56	.70	47.9	14.0	4.55	.43	.57	.71
	1600	755	54.6	16.0	3.17	.43	.57	.70	52.7	15.4	3.57	.43	.57	.72	50.7	14.9	4.02	.43	.58	.73	48.6	14.2	4.55	.44	.59	.75
	1800	850	55.3	16.2	3.18	.44	.59	.74	53.4	15.6	3.57	.44	.60	.75	51.4	15.1	4.03	.44	.60	.77	49.2	14.4	4.56	.45	.62	.79
13ACC-048 — C23-51/65 TXV and RFC COOLING CAPACITY																										
63°F (17°C)	1400	660	47.7	14.0	3.12	.73	.87	.98	46.1	13.5	3.52	.73	.88	1.00	44.4	13.0	3.98	.75	.90	1.00	42.5	12.5	4.52	.76	.92	1.00
	1600	755	48.8	14.3	3.13	.76	.91	1.00	47.2	13.8	3.53	.77	.92	1.00	45.4	13.3	3.99	.78	.94	1.00	43.5	12.7	4.53	.80	.96	1.00
	1800	850	49.8	14.6	3.14	.79	.95	1.00	48.1	14.1	3.54	.80	.96	1.00	46.3	13.6	4.00	.82	.98	1.00	44.5	13.0	4.53	.84	.99	1.00
67°F (19°C)	1400	660	50.9	14.9	3.15	.57	.70	.83	49.1	14.4	3.54	.57	.71	.85	47.2	13.8	4.00	.58	.72	.86	45.1	13.2	4.53	.59	.74	.89
	1600	755	51.8	15.2	3.16	.58	.73	.88	50.0	14.7	3.55	.59	.74	.89	48.0	14.1	4.01	.60	.76	.91	45.9	13.5	4.54	.61	.78	.93
	1800	850	52.6	15.4	3.17	.60	.76	.92	50.7	14.9	3.56	.61	.78	.93	48.7	14.3	4.02	.62	.79	.95	46.5	13.6	4.55	.63	.82	.97
71°F (22°C)	1400	660	54.2	15.9	3.19	.42	.55	.67	52.4	15.4	3.58	.43	.56	.69	50.4	14.8	4.03	.43	.56	.70	48.2	14.1	4.56	.43	.57	.71
	1600	755	55.2	16.2	3.20	.43	.57	.71	53.3	15.6	3.59	.43	.58	.72	51.2	15.0	4.04	.44	.58	.73	48.9	14.3	4.56	.44	.60	.75
	1800	850	56.0	16.4	3.21	.43	.59	.74	54.0	15.8	3.59	.44	.60	.75	51.8	15.2	4.05	.44	.61	.77	49.6	14.5	4.57	.45	.62	.79
13ACC-048 — C33-50/60C TXV and RFC COOLING CAPACITY																										
63°F (17°C)	1400	660	47.8	14.0	3.12	.72	.86	.98	46.2	13.5	3.52	.73	.88	.99	44.4	13.0	3.98	.74	.90	1.00	42.6	12.5	4.52	.76	.91	1.00
	1600	755	48.8	14.3	3.13	.75	.90	1.00	47.2	13.8	3.53	.77	.92	1.00	45.4	13.3	3.99	.78	.94	1.00	43.5	12.7	4.53	.80	.96	1.00
	1800	850	49.8	14.6	3.14	.78	.94	1.00	48.1	14.1	3.54	.80	.95	1.00	46.3	13.6	4.00	.81	.97	1.00	44.4	13.0	4.54	.83	.99	1.00
67°F (19°C)	1400	660	50.9	14.9	3.15	.56	.70	.83	49.1	14.4	3.54	.57	.71	.85	47.3	13.9	4.00	.58	.72	.86	45.2	13.2	4.53	.59	.74	.88
	1600	755	51.8	15.2	3.16	.58	.73	.87	50.0	14.7	3.55	.59	.74	.89	48.1	14.1	4.00	.60	.75	.91	46.0	13.5	4.54	.61	.77	.93
	1800	850	52.5	15.4	3.16	.60	.76	.91	50.7	14.9	3.55	.61	.77	.93	48.7	14.3	4.01	.62	.79	.95	46.6	13.7	4.55	.63	.81	.96
71°F (22°C)	1400	660	54.2	15.9	3.18	.42	.55	.67	52.4	15.4	3.57	.43	.55	.68	50.4	14.8	4.03	.43	.56	.70	48.3	14.2	4.55	.43	.57	.71
	1600	755	55.2	16.2	3.19	.43	.57	.70	53.3	15.6	3.58	.43	.57	.72	51.2	15.0	4.04	.44	.58	.73	49.0	14.4	4.56	.44	.59	.75
	1800	850	55.9	16.4	3.20	.44	.59	.73	54.0	15.8	3.59	.44	.59	.75	51.9	15.2	4.04	.44	.60	.77	49.6	14.5	4.57	.45	.62	.79
13ACC-048 — C26-65EAP TXV and RFC COOLING CAPACITY																										
63°F (17°C)	1400	660	48.8	14.3	3.12	.73	.87	.99	47.1	13.8	3.52	.74	.89	1.00	45.3	13.3	3.97	.75	.91	1.00	43.3	12.7	4.50	.77	.93	1.00
	1600	755	49.9	14.6	3.14	.76	.92	1.00	48.2	14.1	3.53	.78	.93	1.00	46.3	13.6	3.98	.79	.95	1.00	44.4	13.0	4.51	.81	.97	1.00
	1800	850	51.0	14.9	3.14	.79	.96	1.00	49.2	14.4	3.53	.81	.97	1.00	47.4	13.9	3.98	.83	.99	1.00	45.4	13.3	4.52	.85	1.00	1.00
67°F (19°C)	1400	660	51.9	15.2	3.15	.57	.70	.84	50.0	14.7	3.55	.58	.72	.85	48.1	14.1	4.00	.58	.73	.87	46.0	13.5	4.53	.59	.74	.89
	1600	755	52.9	15.5	3.17	.59	.74	.89	51.0	14.9	3.56	.60	.75	.90	49.0	14.4	4.01	.61	.77	.92	46.8	13.7	4.53	.61	.79	.94
	1800	850	53.7	15.7	3.18	.61	.77	.93	51.8	15.2	3.56	.62	.79	.94	49.7	14.6	4.01	.63	.80	.96	47.5	13.9	4.54	.64	.83	.98
71°F (22°C)	1400	660	55.4	16.2	3.19	.42	.55	.68	53.4	15.6	3.58	.43	.56	.69	51.3	15.0	4.03	.43	.57	.70	49.1	14.4	4.55	.43	.58	.72
	1600	755	56.4	16.5	3.21	.43	.57	.71	54.3	15.9	3.59	.43	.58	.73	52.2	15.3	4.04	.44	.59	.74	49.9	14.6	4.56	.44	.60	.76
	1800	850	57.1	16.7	3.22	.44	.59	.75	55.1	16.1	3.60	.44	.60	.76	52.9	15.5	4.05	.45	.61	.78	50.5	14.8	4.56	.45	.63	.80

NOTE - For Temperatures and Capacities not shown in tables, see bulletin - Cooling Unit Rating Table Correction Factor Data in Miscellaneous Engineering Data section.

Entering Wet Bulb Temperature	Total Air Volume		Outdoor Air Temperature Entering Outdoor Coil																							
			85°F (29°C)						95°F (35°C)						105°F (41°C)						115°F (46°C)					
			Total Cooling Capacity		Comp Motor kW Input	Sensible To Total Ratio (S/T) Dry Bulb			Total Cooling Capacity		Comp Motor kW Input	Sensible To Total Ratio (S/T) Dry Bulb			Total Cooling Capacity		Comp Motor kW Input	Sensible To Total Ratio (S/T) Dry Bulb			Total Cooling Capacity		Comp Motor kW Input	Sensible To Total Ratio (S/T) Dry Bulb		
	cfm	L/s	kBtuh	kW		75°F 24°C	80°F 27°C	85°F 29°C	kBtuh	kW		75°F 24°C	80°F 27°C	85°F 29°C	kBtuh	kW		75°F 24°C	80°F 27°C	85°F 29°C	kBtuh	kW		75°F 24°C	80°F 27°C	85°F 29°C
13ACC-048 — CR26-36N/W-F TXV and RFC COOLING CAPACITY																										
63°F (17°C)	1400	660	45.1	13.2	3.10	.73	.88	.99	43.7	12.8	3.50	.74	.89	1.00	42.1	12.3	3.96	.76	.91	1.00	40.4	11.8	4.50	.77	.92	1.00
	1600	755	46.1	13.5	3.10	.76	.92	1.00	44.6	13.1	3.50	.78	.93	1.00	43.0	12.6	3.97	.79	.95	1.00	41.3	12.1	4.51	.81	.96	1.00
	1800	850	47.0	13.8	3.11	.79	.95	1.00	45.4	13.3	3.51	.81	.97	1.00	43.8	12.8	3.97	.82	.98	1.00	42.1	12.3	4.51	.84	.99	1.00
67°F (19°C)	1400	660	47.9	14.0	3.12	.57	.71	.84	46.3	13.6	3.51	.58	.72	.86	44.6	13.1	3.97	.58	.73	.88	42.7	12.5	4.50	.59	.75	.89
	1600	755	48.7	14.3	3.12	.59	.74	.89	47.0	13.8	3.52	.60	.75	.90	45.3	13.3	3.97	.60	.77	.92	43.4	12.7	4.51	.61	.78	.94
	1800	850	49.3	14.4	3.13	.61	.77	.92	47.7	14.0	3.52	.61	.79	.94	45.9	13.5	3.98	.62	.80	.96	44.0	12.9	4.51	.64	.82	.97
71°F (22°C)	1400	660	51.0	14.9	3.14	.42	.55	.68	49.3	14.4	3.54	.43	.56	.69	47.5	13.9	3.99	.43	.57	.71	45.5	13.3	4.52	.43	.58	.72
	1600	755	51.8	15.2	3.15	.43	.57	.72	50.0	14.7	3.54	.43	.58	.73	48.2	14.1	4.00	.44	.59	.74	46.2	13.5	4.53	.44	.60	.76
	1800	850	52.4	15.4	3.16	.44	.60	.75	50.6	14.8	3.55	.44	.60	.76	48.7	14.3	4.00	.45	.61	.78	46.7	13.7	4.53	.45	.63	.80
13ACC-048 — CR26-48N/W-F TXV and RFC COOLING CAPACITY																										
63°F (17°C)	1400	660	46.8	13.7	3.10	.72	.86	.98	45.3	13.3	3.50	.73	.88	.99	43.6	12.8	3.96	.74	.89	1.00	41.8	12.3	4.50	.76	.91	1.00
	1600	755	47.8	14.0	3.11	.75	.90	1.00	46.2	13.5	3.51	.76	.92	1.00	44.5	13.0	3.97	.78	.93	1.00	42.7	12.5	4.51	.79	.95	1.00
	1800	850	48.7	14.3	3.12	.78	.94	1.00	47.1	13.8	3.52	.79	.95	1.00	45.4	13.3	3.97	.81	.97	1.00	43.5	12.7	4.51	.83	.98	1.00
67°F (19°C)	1400	660	49.9	14.6	3.13	.56	.69	.83	48.2	14.1	3.52	.57	.71	.84	46.4	13.6	3.98	.58	.72	.86	44.4	13.0	4.51	.58	.73	.88
	1600	755	50.8	14.9	3.14	.58	.72	.87	49.0	14.4	3.53	.59	.74	.88	47.2	13.8	3.98	.59	.75	.90	45.1	13.2	4.51	.60	.77	.92
	1800	850	51.5	15.1	3.14	.60	.75	.91	49.7	14.6	3.54	.60	.77	.92	47.8	14.0	3.99	.61	.78	.94	45.7	13.4	4.52	.62	.80	.96
71°F (22°C)	1400	660	53.2	15.6	3.16	.42	.55	.67	51.4	15.1	3.55	.42	.55	.68	49.5	14.5	4.00	.43	.56	.69	47.4	13.9	4.53	.43	.57	.71
	1600	755	54.1	15.9	3.17	.43	.57	.70	52.3	15.3	3.56	.43	.57	.71	50.3	14.7	4.01	.43	.58	.73	48.1	14.1	4.53	.44	.59	.74
	1800	850	54.8	16.1	3.18	.43	.58	.73	52.9	15.5	3.57	.44	.59	.75	50.9	14.9	4.02	.44	.60	.76	48.7	14.3	4.55	.45	.61	.78
13ACC-048 — CR26-60N/W-F TXV and RFC COOLING CAPACITY																										
63°F (17°C)	1400	660	47.9	14.0	3.12	.73	.87	.99	46.2	13.5	3.52	.74	.89	1.00	44.5	13.0	3.98	.75	.90	1.00	42.6	12.5	4.51	.77	.92	1.00
	1600	755	49.0	14.4	3.13	.76	.91	1.00	47.3	13.9	3.53	.77	.93	1.00	45.5	13.3	3.98	.79	.95	1.00	43.6	12.8	4.51	.81	.97	1.00
	1800	850	49.9	14.6	3.14	.79	.95	1.00	48.2	14.1	3.54	.81	.97	1.00	46.4	13.6	3.99	.82	.98	1.00	44.6	13.1	4.52	.84	1.00	1.00
67°F (19°C)	1400	660	50.9	14.9	3.15	.57	.70	.84	49.2	14.4	3.54	.57	.71	.85	47.2	13.8	3.99	.58	.73	.87	45.2	13.2	4.53	.59	.74	.89
	1600	755	51.9	15.2	3.16	.59	.74	.88	50.0	14.7	3.55	.59	.75	.90	48.1	14.1	4.01	.60	.76	.92	46.0	13.5	4.53	.61	.78	.94
	1800	850	52.6	15.4	3.17	.61	.77	.92	50.8	14.9	3.56	.61	.78	.94	48.8	14.3	4.01	.62	.80	.96	46.6	13.7	4.54	.63	.82	.98
71°F (22°C)	1400	660	54.4	15.9	3.19	.42	.55	.68	52.5	15.4	3.58	.43	.56	.69	50.4	14.8	4.02	.43	.57	.70	48.2	14.1	4.55	.43	.58	.72
	1600	755	55.3	16.2	3.20	.43	.57	.71	53.3	15.6	3.58	.43	.58	.73	51.2	15.0	4.04	.44	.59	.74	49.0	14.4	4.56	.44	.60	.76
	1800	850	56.0	16.4	3.21	.44	.59	.75	54.0	15.8	3.60	.44	.60	.76	51.9	15.2	4.04	.44	.61	.78	49.6	14.5	4.56	.45	.62	.80
13ACC-048 — CH23-51 TXV and RFC COOLING CAPACITY																										
63°F (17°C)	1400	660	46.4	13.6	3.11	.73	.87	.98	44.9	13.2	3.51	.74	.89	1.00	43.3	12.7	3.97	.75	.90	1.00	41.5	12.2	4.52	.77	.92	1.00
	1600	755	47.5	13.9	3.12	.76	.91	1.00	45.9	13.5	3.52	.77	.93	1.00	44.2	13.0	3.98	.79	.94	1.00	42.4	12.4	4.52	.80	.96	1.00
	1800	850	48.3	14.2	3.12	.79	.95	1.00	46.8	13.7	3.52	.80	.96	1.00	45.1	13.2	3.99	.82	.97	1.00	43.3	12.7	4.52	.84	.99	1.00
67°F (19°C)	1400	660	49.3	14.4	3.13	.57	.70	.84	47.7	14.0	3.53	.57	.71	.85	45.9	13.5	3.99	.58	.73	.87	44.0	12.9	4.52	.59	.74	.89
	1600	755	50.2	14.7	3.14	.59	.74	.88	48.5	14.2	3.53	.59	.75	.90	46.7	13.7	3.99	.60	.76	.91	44.7	13.1	4.53	.61	.78	.93
	1800	850	50.9	14.9	3.15	.60	.77	.92	49.2	14.4	3.54	.61	.78	.93	47.3	13.9	3.99	.62	.80	.95	45.3	13.3	4.53	.63	.82	.97
71°F (22°C)	1400	660	52.5	15.4	3.16	.42	.55	.68	50.7	14.9	3.55	.43	.56	.69	48.9	14.3	4.01	.43	.57	.70	46.9	13.7	4.54	.43	.57	.72
	1600	755	53.4	15.6	3.17	.43	.57	.71	51.6	15.1	3.56	.43	.58	.72	49.7	14.6	4.02	.44	.59	.74	47.6	14.0	4.55	.44	.60	.76
	1800	850	54.1	15.9	3.18	.44	.59	.75	52.2	15.3	3.57	.44	.60	.76	50.2	14.7	4.02	.44	.61	.77	48.1	14.1	4.55	.45	.62	.79
13ACC-048 — CH23-65 TXV and RFC COOLING CAPACITY																										
63°F (17°C)	1400	660	46.9	13.7	3.11	.73	.87	.98	45.4	13.3	3.51	.74	.88	.99	43.7	12.8	3.97	.75	.90	1.00	41.8	12.3	4.51	.77	.92	1.00
	1600	755	48.0	14.1	3.12	.76	.91	1.00	46.4	13.6	3.52	.77	.92	1.00	44.7	13.1	3.98	.79	.94	1.00	42.8	12.5	4.52	.80	.96	1.00
	1800	850	48.9	14.3	3.13	.79	.95	1.00	47.3	13.9	3.53	.80	.96	1.00	45.6	13.4	3.99	.82	.97	1.00	43.7	12.8	4.53	.84	.99	1.00
67°F (19°C)	1400	660	49.9	14.6	3.14	.57	.70	.84	48.2	14.1	3.53	.57	.71	.85	46.4	13.6	3.99	.58	.73	.87	44.4	13.0	4.52	.59	.74	.89
	1600	755	50.8	14.9	3.15	.58	.73	.88	49.0	14.4	3.54	.59	.75	.89	47.2	13.8	3.99	.60	.76	.91	45.1	13.2	4.53	.61	.78	.93
	1800	850	51.5	15.1	3.15	.60	.77	.92	49.7	14.6	3.54	.61	.78	.93	47.8	14.0	4.00	.62	.80	.95	45.7	13.4	4.54	.63	.82	.97
71°F (22°C)	1400	660	53.2	15.6	3.17	.42	.55	.68	51.4	15.1	3.56	.43	.56	.69	49.5	14.5	4.02	.43	.56	.70	47.4	13.9	4.54	.43	.57	.72
	1600	755	54.1	15.9	3.18	.43	.57	.71	52.2	15.3	3.57	.43	.58	.72	50.2	14.7	4.02	.44	.59	.74	48.1	14.1	4.55	.44	.60	.75
	1800	850	54.8	16.1	3.19	.44	.59	.74	52.9	15.5	3.58	.44	.60	.76	50.9	14.9	4.03	.44	.61	.77	48.6	14.2	4.56	.45	.62	.79
13ACC-048 — CH33-44/48B-2F TXV and RFC COOLING CAPACITY																										
63°F (17°C)	1400	660	47.8	14.0	3.12	.72	.86	.98	46.2	13.5	3.51	.73	.88	.99	44.4	13.0	3.97	.74	.90	1.00	42.6	12.5	4.51	.76	.91	1.00
	1600	755	48.8	14.3	3.13	.75	.90	1.00	47.2	13.8	3.52	.77	.92	1.00	45.4	13.3	3.98	.78	.94	1.00	43.5	12.7	4.52	.79	.96	1.00
	1800	850	49.8	14.6	3.13	.78	.94	1.00	48.1	14.1	3.53	.80	.95	1.00	46.3	13.6	3.99	.81	.97	1.00	44.4	13.0	4.53	.83	.99	1.00
67°F (19°C)	1400	660	50.9	14.9	3.14	.56	.70	.83	49.1	14.4	3.54	.57	.71	.85	47.2	13.8	3.99	.58	.72	.86	45.2	13.2	4.52	.59	.74	.88
	1600	755	51.8	15.2	3.15	.58	.73	.87	50.0	14.7	3.54	.59	.74	.89	48.1	14.1	4.00	.60	.75	.91	46.0	13.5	4.53	.61	.77	.93
	1800	850	52.5	15.4	3.16	.60	.76	.91	50.7	14.9	3.55	.61	.77	.93	48.7	14.3	4.00	.62	.79	.95	46.6	13.7	4.54	.63	.81	.96
71°F (22°C)	1400	660	54.2	15.9	3.17	.42	.55	.67	52.4	15.4	3.57	.43	.55	.68	50.4	14.8	4.02	.43	.56	.70	48.3	14.2	4.54	.43	.57	.71
	1600	755	55.2	16.2	3.18	.43	.57	.70	53.3	15.6	3.58	.43	.57	.72	51.2	15.0	4.03	.44	.58	.73	49.0	14.4	4.55	.44	.59	.75
	1800	850	55.9	16.4	3.19	.44	.59	.73	54.0	15.8	3.58	.44	.59	.75	51.9	15.2	4.03	.44	.60	.77	49.6	14.5	4.56	.45	.62	.79
13ACC-048 — CH33-48C-2F TXV and RFC COOLING CAPACITY																										
63°F (17°C)	1400	660	48.3	14.2	3.12	.72	.87	.98	46.7	13.7	3.52	.73	.88	.99	44.9	13.2	3.98	.74	.90	1.00	43.1	12.6	4.52	.76	.91	1.00
	1600	755	49.4	14.5	3.13	.75	.90	1.00	47.7	14.0	3.53	.77	.92	1.00	45.9	13.5	3.99	.78	.94	1.00	44.0	12.9	4.53	.79	.96	1.00
	1800	850	50.3	14.7	3.14	.78	.94	1.00	48.6	14.2	3.54	.80	.96	1.00	46.8	13.7	4.00	.81	.97	1.00	44.9	13.2	4.54	.83	.99	1.00
67°F (19°C)	1400	660	51.5	15.1	3.15	.56	.70	.83	49.7	14.6	3.54	.57	.71	.84	47.8	14.0	4.00	.58	.72	.86	45.7	13.4	4.53	.59	.73	.88
	1600	755	52.4	15.4	3.16	.58	.73	.87	50.5	14.8	3.55	.59	.74	.89	48.6	14.2	4.00	.60	.75	.91	46.5	13.6	4.54	.61	.77	.93
	1800	850	53.1	15.6	3.16	.60	.76	.91	51.3	15.0	3.55	.61	.77	.93	49.3	14.4	4.01	.62	.79	.95	47.1	13.8	4.55	.63	.81	.97
71°F (22°C)	1400	660	54.8	16.1	3.18	.42	.55	.67	53.0	15.5	3.57	.42	.55	.68	51.0	14.9	4.03	.43	.56	.69	48.8	14.3	4.55	.43	.57	.71
	1600	755	55.8	16.4	3.19	.43	.57	.70	53.9	15.8	3.58	.43	.57	.72	51.8	15.2	4.04	.43	.58	.73	49.6	14.5	4.56	.44	.59	.75
	1800	850	56.6	16.6	3.20	.44	.59	.74	54.6	16.0	3.59	.44	.59	.75	52.5	15.4	4.04	.44	.60	.77	50.2	14.7	4.57	.45	.62	.79

NOTE - For Temperatures and Capacities not shown in tables, see bulletin - Cooling Unit Rating Table Correction Factor Data in Miscellaneous Engineering Data section.

Entering Wet Bulb Temperature	Total Air Volume		Outdoor Air Temperature Entering Outdoor Coil																							
			85°F (29°C)						95°F (35°C)						105°F (41°C)						115°F (46°C)					
			Total Cooling Capacity		Comp Motor kW Input	Sensible To Total Ratio (S/T) Dry Bulb			Total Cooling Capacity		Comp Motor kW Input	Sensible To Total Ratio (S/T) Dry Bulb			Total Cooling Capacity		Comp Motor kW Input	Sensible To Total Ratio (S/T) Dry Bulb			Total Cooling Capacity		Comp Motor kW Input	Sensible To Total Ratio (S/T) Dry Bulb		
	cfm	L/s	kBtuh	kW		75°F 24°C	80°F 27°C	85°F 29°C	kBtuh	kW		75°F 24°C	80°F 27°C	85°F 29°C	kBtuh	kW		75°F 24°C	80°F 27°C	85°F 29°C	kBtuh	kW		75°F 24°C	80°F 27°C	85°F 29°C
13ACC-048 — CH33-50/60C-2F TXV and RFC COOLING CAPACITY																										
63°F (17°C)	1400	660	48.7	14.3	3.13	.72	.86	.98	47.0	13.8	3.53	.73	.88	.99	45.2	13.2	3.99	.74	.90	1.00	43.3	12.7	4.53	.76	.91	1.00
	1600	755	49.8	14.6	3.14	.75	.90	1.00	48.0	14.1	3.54	.76	.92	1.00	46.2	13.5	4.00	.78	.94	1.00	44.3	13.0	4.54	.80	.96	1.00
	1800	850	50.7	14.9	3.16	.78	.94	1.00	49.0	14.4	3.55	.80	.96	1.00	47.2	13.8	4.01	.81	.97	1.00	45.2	13.2	4.54	.83	.99	1.00
67°F (19°C)	1400	660	51.9	15.2	3.16	.56	.70	.83	50.1	14.7	3.56	.57	.71	.84	48.1	14.1	4.01	.58	.72	.86	46.0	13.5	4.55	.59	.73	.88
	1600	755	52.9	15.5	3.17	.58	.73	.87	51.0	14.9	3.56	.59	.74	.89	49.0	14.4	4.02	.60	.75	.91	46.8	13.7	4.56	.61	.77	.93
	1800	850	53.7	15.7	3.18	.60	.76	.91	51.7	15.2	3.58	.61	.77	.93	49.7	14.6	4.03	.62	.79	.95	47.5	13.9	4.56	.63	.81	.97
71°F (22°C)	1400	660	55.4	16.2	3.20	.42	.55	.67	53.5	15.7	3.59	.42	.55	.68	51.4	15.1	4.04	.43	.56	.70	49.2	14.4	4.57	.43	.57	.71
	1600	755	56.4	16.5	3.21	.43	.57	.70	54.4	15.9	3.60	.43	.57	.72	52.2	15.3	4.05	.43	.58	.73	50.0	14.7	4.58	.44	.59	.75
	1800	850	57.2	16.8	3.22	.43	.59	.73	55.1	16.1	3.61	.44	.59	.75	52.9	15.5	4.06	.44	.60	.76	50.6	14.8	4.58	.45	.62	.78
13ACC-048 — CH23-68 TXV and RFC COOLING CAPACITY																										
63°F (17°C)	1400	660	49.3	14.4	3.13	.73	.87	1.00	47.5	13.9	3.53	.74	.89	1.00	45.7	13.4	3.98	.75	.91	1.00	43.7	12.8	4.51	.77	.93	1.00
	1600	755	50.5	14.8	3.15	.76	.92	1.00	48.7	14.3	3.53	.78	.94	1.00	46.8	13.7	3.99	.79	.96	1.00	44.8	13.1	4.51	.81	.98	1.00
	1800	850	51.5	15.1	3.15	.80	.96	1.00	49.7	14.6	3.54	.81	.98	1.00	47.8	14.0	4.00	.83	.99	1.00	45.9	13.5	4.52	.85	1.00	1.00
67°F (19°C)	1400	660	52.4	15.4	3.16	.57	.70	.84	50.5	14.8	3.55	.58	.72	.86	48.5	14.2	4.01	.58	.73	.87	46.4	13.6	4.53	.59	.75	.90
	1600	755	53.4	15.6	3.18	.59	.74	.89	51.5	15.1	3.56	.60	.75	.91	49.4	14.5	4.01	.61	.77	.93	47.2	13.8	4.54	.62	.79	.95
	1800	850	54.3	15.9	3.19	.61	.78	.93	52.3	15.3	3.57	.62	.79	.95	50.2	14.7	4.02	.63	.81	.97	47.9	14.0	4.55	.64	.83	.99
71°F (22°C)	1400	660	55.9	16.4	3.20	.42	.55	.68	53.9	15.8	3.59	.43	.56	.69	51.8	15.2	4.04	.43	.57	.71	49.5	14.5	4.56	.43	.58	.72
	1600	755	56.9	16.7	3.22	.43	.57	.72	54.8	16.1	3.60	.43	.58	.73	52.7	15.4	4.05	.44	.59	.75	50.3	14.7	4.57	.44	.60	.76
	1800	850	57.7	16.9	3.23	.44	.60	.75	55.6	16.3	3.61	.44	.61	.77	53.3	15.6	4.06	.45	.62	.79	50.9	14.9	4.58	.45	.63	.81
13ACC-048 — C33-48C TXV with G60UHV-60C COOLING CAPACITY																										
63°F (17°C)	1430	675	47.8	14.0	3.12	.73	.87	.99	46.2	13.5	3.51	.74	.89	1.00	44.5	13.0	3.98	.75	.90	1.00	42.7	12.5	4.52	.77	.92	1.00
	1630	770	48.8	14.3	3.12	.76	.91	1.00	47.2	13.8	3.52	.77	.93	1.00	45.5	13.3	3.99	.78	.94	1.00	43.6	12.8	4.53	.80	.96	1.00
	1830	865	49.7	14.6	3.13	.79	.95	1.00	48.0	14.1	3.53	.80	.96	1.00	46.3	13.6	3.99	.82	.98	1.00	44.5	13.0	4.54	.83	.99	1.00
67°F (19°C)	1430	675	50.8	14.9	3.14	.57	.70	.84	49.1	14.4	3.53	.57	.71	.85	47.2	13.8	3.99	.58	.73	.87	45.3	13.3	4.53	.59	.74	.89
	1630	770	51.7	15.2	3.14	.58	.73	.88	49.9	14.6	3.54	.59	.75	.89	48.0	14.1	3.99	.60	.76	.91	46.0	13.5	4.53	.61	.78	.93
	1830	865	52.3	15.3	3.15	.60	.77	.92	50.5	14.8	3.55	.61	.78	.93	48.7	14.3	4.00	.62	.79	.95	46.6	13.7	4.54	.63	.81	.97
71°F (22°C)	1430	675	54.1	15.9	3.17	.42	.55	.68	52.3	15.3	3.56	.43	.56	.69	50.4	14.8	4.02	.43	.57	.70	48.3	14.2	4.55	.43	.57	.72
	1630	770	55.0	16.1	3.17	.43	.57	.71	53.1	15.6	3.57	.43	.58	.72	51.1	15.0	4.02	.44	.59	.74	49.0	14.4	4.55	.44	.60	.75
	1830	865	55.7	16.3	3.18	.44	.59	.74	53.8	15.8	3.57	.44	.60	.76	51.7	15.2	4.03	.44	.61	.77	49.5	14.5	4.56	.45	.62	.79
13ACC-048 — C33-50/60C TXV with G60UHV-60C COOLING CAPACITY																										
63°F (17°C)	1430	675	48.3	14.2	3.12	.73	.87	.99	46.6	13.7	3.52	.74	.89	1.00	44.9	13.2	3.98	.75	.90	1.00	43.0	12.6	4.52	.77	.92	1.00
	1630	770	49.3	14.4	3.13	.76	.91	1.00	47.6	14.0	3.53	.77	.93	1.00	45.9	13.5	3.99	.78	.94	1.00	44.0	12.9	4.53	.80	.96	1.00
	1830	865	50.2	14.7	3.14	.79	.95	1.00	48.6	14.2	3.54	.80	.96	1.00	46.8	13.7	4.00	.82	.98	1.00	44.9	13.2	4.54	.84	.99	1.00
67°F (19°C)	1430	675	51.4	15.1	3.15	.57	.70	.84	49.6	14.5	3.54	.57	.71	.85	47.7	14.0	4.00	.58	.73	.87	45.7	13.4	4.53	.59	.74	.89
	1630	770	52.3	15.3	3.16	.58	.73	.88	50.4	14.8	3.55	.59	.75	.90	48.5	14.2	4.01	.60	.76	.91	46.4	13.6	4.54	.61	.78	.93
	1830	865	53.0	15.5	3.17	.60	.76	.92	51.1	15.0	3.56	.61	.78	.93	49.2	14.4	4.01	.62	.79	.95	47.0	13.8	4.55	.63	.81	.97
71°F (22°C)	1430	675	54.7	16.0	3.18	.42	.55	.68	52.9	15.5	3.57	.42	.56	.69	50.9	14.9	4.03	.43	.56	.70	48.7	14.3	4.55	.43	.57	.72
	1630	770	55.7	16.3	3.19	.43	.57	.71	53.8	15.8	3.58	.43	.58	.72	51.7	15.2	4.04	.43	.59	.74	49.5	14.5	4.56	.44	.60	.75
	1830	865	56.4	16.5	3.20	.44	.59	.74	54.4	15.9	3.59	.44	.60	.76	52.3	15.3	4.04	.44	.61	.77	50.0	14.7	4.57	.45	.62	.79
13ACC-048 — CR26-36W-F TXV with G60DFV-60C COOLING CAPACITY																										
63°F (17°C)	1470	695	46.2	13.5	3.11	.74	.89	1.00	44.7	13.1	3.52	.75	.90	1.00	43.1	12.6	3.98	.77	.92	1.00	41.3	12.1	4.52	.78	.94	1.00
	1670	790	47.1	13.8	3.12	.77	.93	1.00	45.6	13.4	3.52	.79	.94	1.00	43.9	12.9	3.99	.80	.96	1.00	42.2	12.4	4.53	.82	.98	1.00
	1870	885	48.0	14.1	3.13	.81	.96	1.00	46.4	13.6	3.53	.82	.97	1.00	44.8	13.1	3.99	.83	.99	1.00	43.1	12.6	4.53	.85	1.00	1.00
67°F (19°C)	1470	695	48.9	14.3	3.13	.58	.72	.86	47.3	13.9	3.53	.58	.73	.87	45.5	13.3	3.99	.59	.74	.89	43.6	12.8	4.53	.60	.76	.91
	1670	790	49.7	14.6	3.14	.59	.75	.90	48.0	14.1	3.54	.60	.76	.91	46.2	13.5	3.99	.61	.78	.93	44.3	13.0	4.53	.62	.80	.95
	1870	885	50.3	14.7	3.14	.61	.78	.93	48.6	14.2	3.54	.62	.80	.95	46.8	13.7	4.00	.63	.81	.96	44.8	13.1	4.54	.64	.83	.98
71°F (22°C)	1470	695	52.0	15.2	3.16	.43	.56	.69	50.3	14.7	3.56	.43	.57	.71	48.5	14.2	4.01	.43	.58	.72	46.4	13.6	4.55	.44	.59	.74
	1670	790	52.8	15.5	3.17	.43	.58	.73	51.0	14.9	3.56	.44	.59	.74	49.1	14.4	4.02	.44	.60	.76	47.0	13.8	4.55	.44	.61	.77
	1870	885	53.4	15.6	3.18	.44	.60	.76	51.6	15.1	3.57	.44	.61	.78	49.6	14.5	4.03	.45	.62	.79	47.5	13.9	4.56	.45	.63	.81
13ACC-048 — CR26-48N-F TXV with G60DFV-60C COOLING CAPACITY																										
63°F (17°C)	1470	695	47.4	13.9	3.13	.73	.88	.99	45.8	13.4	3.53	.74	.89	1.00	44.1	12.9	3.99	.75	.91	1.00	42.3	12.4	4.53	.77	.93	1.00
	1670	790	48.4	14.2	3.14	.76	.91	1.00	46.7	13.7	3.54	.77	.93	1.00	45.0	13.2	4.00	.79	.95	1.00	43.1	12.6	4.54	.80	.96	1.00
	1870	885	49.2	14.4	3.15	.79	.95	1.00	47.6	14.0	3.54	.80	.96	1.00	45.8	13.4	4.01	.82	.98	1.00	44.0	12.9	4.54	.84	.99	1.00
67°F (19°C)	1470	695	50.5	14.8	3.15	.57	.70	.84	48.7	14.3	3.55	.58	.72	.86	46.9	13.7	4.00	.58	.73	.87	44.9	13.2	4.54	.59	.74	.89
	1670	790	51.3	15.0	3.16	.58	.74	.88	49.5	14.5	3.56	.59	.75	.90	47.6	14.0	4.01	.60	.76	.92	45.5	13.3	4.55	.61	.78	.94
	1870	885	51.9	15.2	3.17	.60	.77	.92	50.1	14.7	3.56	.61	.78	.93	48.2	14.1	4.02	.62	.79	.95	46.1	13.5	4.55	.63	.81	.97
71°F (22°C)	1470	695	53.7	15.7	3.18	.42	.55	.68	51.9	15.2	3.58	.43	.56	.69	50.0	14.7	4.03	.43	.57	.71	47.9	14.0	4.57	.43	.58	.72
	1670	790	54.6	16.0	3.19	.43	.57	.71	52.7	15.4	3.59	.43	.58	.72	50.7	14.9	4.04	.44	.59	.74	48.5	14.2	4.57	.44	.60	.76
	1870	885	55.2	16.2	3.20	.44	.59	.74	53.3	15.6	3.59	.44	.60	.76	51.3	15.0	4.05	.44	.61	.77	49.0	14.4	4.58	.45	.62	.79
13ACC-048 — CR26-48W-F TXV with G60DFV-60D-135 COOLING CAPACITY																										
63°F (17°C)	1360	640	47.0	13.8	3.12	.72	.85	.97	45.4	13.3	3.52	.72	.87	.98	43.8	12.8	3.99	.74	.88	1.00	41.9	12.3	4.53	.75	.90	1.00
	1560	735	48.0	14.1	3.13	.74	.89	1.00	46.4	13.6	3.53	.75	.91	1.00	44.7	13.1	3.99	.77	.93	1.00	42.8	12.5	4.54	.78	.94	1.00
	1760	830	48.9	14.3	3.14	.77	.93	1.00	47.3	13.9	3.54	.78	.95	1.00	45.6	13.4	4.00	.80	.96	1.00	43.7	12.8	4.54	.82	.98	1.00
67°F (19°C)	1360	640	50.1	14.7	3.15	.56	.69	.82	48.4	14.2	3.54	.56	.70	.84	46.6	13.7	4.00	.57	.71	.85	44.6	13.1	4.54	.58	.73	.87
	1560	735	51.0	14.9	3.16	.58	.72	.86	49.3	14.4	3.55	.58	.73	.88	47.4	13.9	4.01	.59	.74	.89	45.3	13.3	4.54	.60	.76	.91
	1760	830	51.8	15.2	3.16	.59	.75	.90	50.0	14.7	3.56	.60	.76	.92	48.1	14.1	4.01	.61	.78	.93	46.0	13.5	4.55	.62	.80	.95
71°F (22°C)	1360	640	53.4	15.6	3.18	.42	.54	.66	51.6	15.1	3.57	.42	.55	.67	49.7	14.6	4.03	.42	.56	.69	47.6	14.0	4.56	.43	.56	.70
	1560	735	54.3	15.9	3.19	.43	.56	.69	52.5	15.4	3.58	.43	.57	.71	50.5	14.8	4.04	.43	.58	.72	48.4	14.2	4.56	.44	.59	.74
	1760	830	55.1	16.1	3.20	.43	.58	.72	53.2	15.6	3.59	.44	.59	.74	51.2	15.0	4.04	.44	.60	.75	49.0	14.4	4.57	.44	.61	.77

NOTE - For Temperatures and Capacities not shown in tables, see bulletin - Cooling Unit Rating Table Correction Factor Data in Miscellaneous Engineering Data section.

Entering Wet Bulb Temperature	Total Air Volume		Outdoor Air Temperature Entering Outdoor Coil																							
			85°F (29°C)						95°F (35°C)						105°F (41°C)						115°F (46°C)					
			Total Cooling Capacity		Comp Motor kW Input	Sensible To Total Ratio (S/T) Dry Bulb			Total Cooling Capacity		Comp Motor kW Input	Sensible To Total Ratio (S/T) Dry Bulb			Total Cooling Capacity		Comp Motor kW Input	Sensible To Total Ratio (S/T) Dry Bulb			Total Cooling Capacity		Comp Motor kW Input	Sensible To Total Ratio (S/T) Dry Bulb		
	cfm	L/s	kBtuh	kW		75°F 24°C	80°F 27°C	85°F 29°C	kBtuh	kW		75°F 24°C	80°F 27°C	85°F 29°C	kBtuh	kW		75°F 24°C	80°F 27°C	85°F 29°C	kBtuh	kW		75°F 24°C	80°F 27°C	85°F 29°C
13ACC-048 — CR26-60N-F TXV with G60DFV-60C COOLING CAPACITY																										
63°F (17°C)	1470	695	48.9	14.3	3.14	.74	.89	1.00	47.3	13.9	3.54	.75	.90	1.00	45.4	13.3	4.00	.76	.92	1.00	43.5	12.7	4.54	.78	.94	1.00
	1670	790	50.0	14.7	3.15	.77	.93	1.00	48.3	14.2	3.55	.78	.94	1.00	46.4	13.6	4.01	.80	.96	1.00	44.5	13.0	4.54	.82	.98	1.00
	1870	885	50.9	14.9	3.16	.80	.96	1.00	49.2	14.4	3.56	.82	.98	1.00	47.4	13.9	4.01	.84	.99	1.00	45.5	13.3	4.54	.85	1.00	1.00
67°F (19°C)	1470	695	52.0	15.2	3.17	.57	.71	.85	50.2	14.7	3.56	.58	.73	.87	48.2	14.1	4.02	.59	.74	.89	46.1	13.5	4.55	.60	.76	.91
	1670	790	52.9	15.5	3.18	.59	.75	.90	51.0	14.9	3.57	.60	.76	.91	49.0	14.4	4.03	.61	.78	.93	46.8	13.7	4.56	.62	.79	.95
	1870	885	53.6	15.7	3.19	.61	.78	.94	51.7	15.2	3.58	.62	.79	.95	49.6	14.5	4.03	.63	.81	.97	47.4	13.9	4.56	.64	.83	.99
71°F (22°C)	1470	695	55.4	16.2	3.21	.43	.56	.69	53.5	15.7	3.59	.43	.56	.70	51.4	15.1	4.05	.43	.57	.72	49.2	14.4	4.58	.43	.58	.73
	1670	790	56.3	16.5	3.22	.43	.58	.72	54.3	15.9	3.60	.44	.59	.74	52.1	15.3	4.06	.44	.60	.75	49.9	14.6	4.58	.44	.61	.77
	1870	885	57.0	16.7	3.22	.44	.60	.76	54.9	16.1	3.62	.44	.61	.77	52.7	15.4	4.07	.45	.62	.79	50.4	14.8	4.59	.45	.63	.81
13ACC-048 — CH23-51 TXV with G60UHV-60C/D COOLING CAPACITY																										
63°F (17°C)	1400	660	46.4	13.6	3.11	.73	.87	.98	44.9	13.2	3.51	.74	.89	1.00	43.3	12.7	3.97	.75	.90	1.00	41.5	12.2	4.52	.77	.92	1.00
	1600	755	47.5	13.9	3.12	.76	.91	1.00	45.9	13.5	3.52	.77	.93	1.00	44.2	13.0	3.98	.79	.94	1.00	42.4	12.4	4.52	.80	.96	1.00
	1800	850	48.3	14.2	3.12	.79	.95	1.00	46.8	13.7	3.52	.80	.96	1.00	45.1	13.2	3.99	.82	.97	1.00	43.3	12.7	4.52	.84	.99	1.00
67°F (19°C)	1400	660	49.3	14.4	3.13	.57	.70	.84	47.7	14.0	3.53	.57	.71	.85	45.9	13.5	3.99	.58	.73	.87	44.0	12.9	4.52	.59	.74	.89
	1600	755	50.2	14.7	3.14	.59	.74	.88	48.5	14.2	3.53	.59	.75	.90	46.7	13.7	3.99	.60	.76	.91	44.7	13.1	4.53	.61	.78	.93
	1800	850	50.9	14.9	3.15	.60	.77	.92	49.2	14.4	3.54	.61	.78	.93	47.3	13.9	3.99	.62	.80	.95	45.3	13.3	4.53	.63	.82	.97
71°F (22°C)	1400	660	52.5	15.4	3.16	.42	.55	.68	50.7	14.9	3.55	.43	.56	.69	48.9	14.3	4.01	.43	.57	.70	46.9	13.7	4.54	.43	.57	.72
	1600	755	53.4	15.6	3.17	.43	.57	.71	51.6	15.1	3.56	.43	.58	.72	49.7	14.6	4.02	.44	.59	.74	47.6	14.0	4.55	.44	.60	.76
	1800	850	54.1	15.9	3.18	.44	.59	.75	52.2	15.3	3.57	.44	.60	.76	50.2	14.7	4.02	.44	.61	.77	48.1	14.1	4.55	.45	.62	.79
13ACC-048 — CH23-65 TXV with G60UHV-60C/D COOLING CAPACITY																										
63°F (17°C)	1400	660	46.9	13.7	3.11	.73	.87	.98	45.4	13.3	3.51	.74	.88	.99	43.7	12.8	3.97	.75	.90	1.00	41.8	12.3	4.51	.77	.92	1.00
	1600	755	48.0	14.1	3.12	.76	.91	1.00	46.4	13.6	3.52	.77	.92	1.00	44.7	13.1	3.98	.79	.94	1.00	42.8	12.5	4.52	.80	.96	1.00
	1800	850	48.9	14.3	3.13	.79	.95	1.00	47.3	13.9	3.53	.80	.96	1.00	45.6	13.4	3.99	.82	.97	1.00	43.7	12.8	4.53	.84	.99	1.00
67°F (19°C)	1400	660	49.9	14.6	3.14	.57	.70	.84	48.2	14.1	3.53	.57	.71	.85	46.4	13.6	3.99	.58	.73	.87	44.4	13.0	4.52	.59	.74	.89
	1600	755	50.8	14.9	3.15	.58	.73	.88	49.0	14.4	3.54	.59	.75	.89	47.2	13.8	3.99	.60	.76	.91	45.1	13.2	4.53	.61	.78	.93
	1800	850	51.5	15.1	3.15	.60	.77	.92	49.7	14.6	3.54	.61	.78	.93	47.8	14.0	4.00	.62	.80	.95	45.7	13.4	4.54	.63	.82	.97
71°F (22°C)	1400	660	53.2	15.6	3.17	.42	.55	.68	51.4	15.1	3.56	.43	.56	.69	49.5	14.5	4.02	.43	.56	.70	47.4	13.9	4.54	.43	.57	.72
	1600	755	54.1	15.9	3.18	.43	.57	.71	52.2	15.3	3.57	.43	.58	.72	50.2	14.7	4.02	.44	.59	.74	48.1	14.1	4.55	.44	.60	.75
	1800	850	54.8	16.1	3.19	.44	.59	.74	52.9	15.5	3.58	.44	.60	.76	50.9	14.9	4.03	.44	.61	.77	48.6	14.2	4.56	.45	.62	.79
13ACC-048 — CH33-44/48B-2F TXV with G60UHV-60B-090 COOLING CAPACITY																										
63°F (17°C)	1430	675	48.2	14.1	3.12	.73	.87	.99	46.6	13.7	3.52	.74	.88	1.00	44.9	13.2	3.98	.75	.90	1.00	43.0	12.6	4.52	.77	.92	1.00
	1630	770	49.3	14.4	3.13	.76	.91	1.00	47.6	14.0	3.53	.77	.93	1.00	45.9	13.5	3.99	.78	.94	1.00	43.9	12.9	4.53	.80	.96	1.00
	1830	865	50.2	14.7	3.14	.79	.95	1.00	48.5	14.2	3.54	.80	.96	1.00	46.7	13.7	4.00	.82	.98	1.00	44.8	13.1	4.54	.84	.99	1.00
67°F (19°C)	1430	675	51.4	15.1	3.15	.57	.70	.84	49.6	14.5	3.54	.57	.71	.85	47.7	14.0	4.00	.58	.72	.87	45.6	13.4	4.53	.59	.74	.89
	1630	770	52.2	15.3	3.16	.58	.73	.88	50.4	14.8	3.55	.59	.74	.89	48.5	14.2	4.01	.60	.76	.91	46.4	13.6	4.54	.61	.78	.93
	1830	865	53.0	15.5	3.17	.60	.76	.92	51.1	15.0	3.56	.61	.78	.93	49.1	14.4	4.01	.62	.79	.95	47.0	13.8	4.55	.63	.81	.97
71°F (22°C)	1430	675	54.7	16.0	3.18	.42	.55	.68	52.9	15.5	3.58	.42	.56	.69	50.9	14.9	4.03	.43	.56	.70	48.7	14.3	4.55	.43	.57	.72
	1630	770	55.7	16.3	3.19	.43	.57	.71	53.7	15.7	3.58	.43	.58	.72	51.7	15.2	4.04	.43	.59	.74	49.4	14.5	4.57	.44	.60	.75
	1830	865	56.4	16.5	3.20	.44	.59	.74	54.4	15.9	3.59	.44	.60	.76	52.3	15.3	4.04	.44	.61	.77	50.0	14.7	4.57	.45	.62	.79
13ACC-048 — CH33-48C-2F TXV with G60UHV-60C COOLING CAPACITY																										
63°F (17°C)	1430	675	48.2	14.1	3.12	.73	.87	.99	46.6	13.7	3.52	.74	.88	1.00	44.9	13.2	3.98	.75	.90	1.00	43.0	12.6	4.52	.77	.92	1.00
	1630	770	49.3	14.4	3.13	.76	.91	1.00	47.6	14.0	3.53	.77	.93	1.00	45.9	13.5	3.99	.78	.94	1.00	43.9	12.9	4.53	.80	.96	1.00
	1830	865	50.2	14.7	3.14	.79	.95	1.00	48.5	14.2	3.54	.80	.96	1.00	46.7	13.7	4.00	.82	.98	1.00	44.8	13.1	4.54	.84	.99	1.00
67°F (19°C)	1430	675	51.4	15.1	3.15	.57	.70	.84	49.6	14.5	3.54	.57	.71	.85	47.7	14.0	4.00	.58	.72	.87	45.6	13.4	4.53	.59	.74	.89
	1630	770	52.2	15.3	3.16	.58	.73	.88	50.4	14.8	3.55	.59	.74	.89	48.5	14.2	4.01	.60	.76	.91	46.4	13.6	4.54	.61	.78	.93
	1830	865	53.0	15.5	3.17	.60	.76	.92	51.1	15.0	3.56	.61	.78	.93	49.1	14.4	4.01	.62	.79	.95	47.0	13.8	4.55	.63	.81	.97
71°F (22°C)	1430	675	54.7	16.0	3.18	.42	.55	.68	52.9	15.5	3.58	.42	.56	.69	50.9	14.9	4.03	.43	.56	.70	48.7	14.3	4.55	.43	.57	.72
	1630	770	55.7	16.3	3.19	.43	.57	.71	53.7	15.7	3.58	.43	.58	.72	51.7	15.2	4.04	.43	.59	.74	49.4	14.5	4.57	.44	.60	.75
	1830	865	56.4	16.5	3.20	.44	.59	.74	54.4	15.9	3.59	.44	.60	.76	52.3	15.3	4.04	.44	.61	.77	50.0	14.7	4.57	.45	.62	.79
13ACC-048 — CH33-50/60C-2F TXV with G60UHV-60C COOLING CAPACITY																										
63°F (17°C)	1430	675	48.7	14.3	3.13	.73	.87	.99	47.0	13.8	3.53	.74	.89	1.00	45.2	13.2	3.99	.75	.90	1.00	43.3	12.7	4.53	.76	.92	1.00
	1630	770	49.7	14.6	3.14	.76	.91	1.00	48.0	14.1	3.54	.77	.93	1.00	46.2	13.5	4.00	.78	.94	1.00	44.3	13.0	4.53	.80	.96	1.00
	1830	865	50.7	14.9	3.15	.79	.95	1.00	49.0	14.4	3.55	.80	.96	1.00	47.1	13.8	4.00	.82	.98	1.00	45.2	13.2	4.54	.84	.99	1.00
67°F (19°C)	1430	675	51.9	15.2	3.16	.57	.70	.84	50.0	14.7	3.56	.57	.71	.85	48.1	14.1	4.01	.58	.72	.87	46.0	13.5	4.55	.59	.74	.89
	1630	770	52.8	15.5	3.17	.58	.73	.88	50.9	14.9	3.56	.59	.74	.89	48.9	14.3	4.02	.60	.76	.91	46.7	13.7	4.55	.61	.78	.94
	1830	865	53.6	15.7	3.18	.60	.76	.92	51.6	15.1	3.57	.61	.78	.93	49.6	14.5	4.03	.62	.79	.95	47.4	13.9	4.56	.63	.81	.97
71°F (22°C)	1430	675	55.3	16.2	3.20	.42	.55	.68	53.4	15.6	3.59	.42	.56	.69	51.3	15.0	4.04	.43	.56	.70	49.1	14.4	4.57	.43	.57	.72
	1630	770	56.3	16.5	3.21	.43	.57	.71	54.3	15.9	3.60	.43	.58	.72	52.2	15.3	4.05	.43	.58	.74	49.9	14.6	4.58	.44	.60	.75
	1830	865	57.0	16.7	3.22	.44	.59	.74	55.0	16.1	3.61	.44	.60	.75	52.8	15.5	4.06	.44	.61	.77	50.5	14.8	4.58	.45	.62	.79
13ACC-048 — CH23-68 TXV with G60UHV-60C/D COOLING CAPACITY																										
63°F (17°C)	1400	660	49.3	14.4	3.13	.73	.87	1.00	47.5	13.9	3.53	.74	.89	1.00	45.7	13.4	3.98	.75	.91	1.00	43.7	12.8	4.51	.77	.93	1.00
	1600	755	50.5	14.8	3.15	.76	.92	1.00	48.7	14.3	3.53	.78	.94	1.00	46.8	13.7	3.99	.79	.96	1.00	44.8	13.1	4.51	.81	.98	1.00
	1800	850	51.5	15.1	3.15	.80	.96	1.00	49.7	14.6	3.54	.81	.98	1.00	47.8	14.0	4.00	.83	.99	1.00	45.9	13.5	4.52	.85	1.00	1.00
67°F (19°C)	1400	660	52.4	15.4	3.16	.57	.70	.84	50.5	14.8	3.55	.58	.72	.86	48.5	14.2	4.01	.58	.73	.87	46.4	13.6	4.53	.59	.75	.90
	1600	755	53.4	15.6	3.18	.59	.74	.89	51.5	15.1	3.56	.60	.75	.91	49.4	14.5	4.01	.61	.77	.93	47.2	13.8	4.54	.62	.79	.95
	1800	850	54.3	15.9	3.19	.61	.78	.93	52.3	15.3	3.57	.62	.79	.95	50.2	14.7	4.02	.63	.81	.97	47.9	14.0	4.55	.64	.83	.99
71°F (22°C)	1400	660	55.9	16.4	3.20	.42	.55	.68	53.9	15.8	3.59	.43	.56	.69	51.8	15.2	4.04	.43	.57	.71	49.5	14.5	4.56	.43	.58	.72
	1600	755	56.9	16.7	3.22	.43	.57	.72	54.8	16.1	3.60	.43	.58	.73	52.7	15.4	4.05	.44	.59	.75	50.3	14.7	4.57	.44	.60	.76
	1800	850	57.7	16.9	3.23	.44	.60	.75	55.6	16.3	3.61	.44	.61	.77	53.3	15.6	4.06	.45	.62	.79	50.9	14.9	4.58	.45	.63	.81

NOTE - For Temperatures and Capacities not shown in tables, see bulletin - Cooling Unit Rating Table Correction Factor Data in Miscellaneous Engineering Data section.

Entering Wet Bulb Temperature	Total Air Volume		Outdoor Air Temperature Entering Outdoor Coil																							
			85°F (29°C)						95°F (35°C)						105°F (41°C)						115°F (46°C)					
			Total Cooling Capacity		Comp Motor kW Input	Sensible To Total Ratio (S/T) Dry Bulb			Total Cooling Capacity		Comp Motor kW Input	Sensible To Total Ratio (S/T) Dry Bulb			Total Cooling Capacity		Comp Motor kW Input	Sensible To Total Ratio (S/T) Dry Bulb			Total Cooling Capacity		Comp Motor kW Input	Sensible To Total Ratio (S/T) Dry Bulb		
	cfm	L/s	kBtuh	kW		75°F 24°C	80°F 27°C	85°F 29°C	kBtuh	kW		75°F 24°C	80°F 27°C	85°F 29°C	kBtuh	kW		75°F 24°C	80°F 27°C	85°F 29°C	kBtuh	kW		75°F 24°C	80°F 27°C	85°F 29°C
13ACC-048 — CB30M-41 TXV COOLING CAPACITY																										
63°F (17°C)	1050	495	43.6	12.8	3010	.68	.80	.91	42.1	12.3	3400	.69	.81	.92	40.5	11.9	3840	.70	.83	.94	38.8	11.4	4350	.71	.84	.96
	1250	590	45.1	13.2	3020	.71	.84	.96	43.5	12.7	3410	.72	.86	.97	41.8	12.3	3860	.73	.87	.99	40.1	11.8	4370	.75	.89	1.00
	1450	685	46.3	13.6	3030	.74	.88	.99	44.7	13.1	3420	.75	.90	1.00	42.9	12.6	3860	.77	.92	1.00	41.1	12.0	4370	.78	.93	1.00
67°F (19°C)	1050	495	46.7	13.7	3040	.55	.66	.77	45.0	13.2	3430	.55	.66	.78	43.3	12.7	3870	.55	.67	.79	41.5	12.2	4380	.56	.68	.81
	1250	590	48.1	14.1	3050	.56	.69	.81	46.4	13.6	3440	.57	.70	.82	44.6	13.1	3880	.57	.71	.84	42.7	12.5	4390	.58	.72	.86
	1450	685	49.2	14.4	3060	.58	.72	.85	47.4	13.9	3450	.58	.73	.87	45.5	13.3	3890	.59	.74	.88	43.6	12.8	4400	.60	.76	.90
71°F (22°C)	1050	495	49.9	14.6	3070	.42	.52	.63	48.2	14.1	3460	.42	.53	.64	46.4	13.6	3900	.42	.53	.65	44.5	13.0	4410	.42	.54	.66
	1250	590	51.3	15.0	3090	.42	.54	.66	49.6	14.5	3470	.43	.55	.67	47.7	14.0	3920	.43	.55	.68	45.7	13.4	4420	.43	.56	.69
	1450	685	52.4	15.4	3100	.43	.56	.69	50.6	14.8	3490	.43	.57	.70	48.6	14.2	3930	.43	.58	.72	46.5	13.6	4440	.44	.59	.73
13ACC-048 — CB31MV-41 TXV COOLING CAPACITY																										
63°F (17°C)	1265	595	44.3	13.0	3020	.71	.84	.96	42.7	12.5	3400	.72	.86	.97	41.0	12.0	3850	.73	.87	.99	39.3	11.5	4350	.75	.89	1.00
	1400	660	45.1	13.2	3020	.73	.87	.99	43.5	12.7	3410	.75	.89	1.00	41.9	12.3	3850	.76	.91	1.00	40.1	11.8	4360	.77	.92	1.00
	1545	730	45.9	13.5	3030	.76	.90	1.00	44.2	13.0	3410	.77	.92	1.00	42.5	12.5	3860	.78	.94	1.00	40.8	12.0	4360	.80	.95	1.00
67°F (19°C)	1265	595	47.2	13.8	3040	.56	.69	.81	45.5	13.3	3430	.57	.70	.82	43.7	12.8	3870	.57	.71	.84	41.9	12.3	4370	.58	.72	.86
	1400	660	48.0	14.1	3050	.57	.71	.84	46.3	13.6	3440	.58	.72	.86	44.4	13.0	3880	.59	.73	.87	42.6	12.5	4380	.60	.75	.89
	1545	730	48.6	14.2	3050	.59	.73	.87	46.9	13.7	3450	.59	.74	.89	45.0	13.2	3880	.60	.76	.91	43.1	12.6	4390	.61	.78	.92
71°F (22°C)	1265	595	50.4	14.8	3070	.42	.54	.66	48.6	14.2	3460	.43	.55	.67	46.7	13.7	3910	.43	.56	.68	44.8	13.1	4410	.43	.56	.70
	1400	660	51.2	15.0	3080	.43	.56	.68	49.4	14.5	3470	.43	.56	.70	47.5	13.9	3920	.43	.57	.71	45.5	13.3	4420	.44	.58	.72
	1545	730	51.8	15.2	3090	.43	.57	.71	50.0	14.7	3480	.43	.58	.72	48.0	14.1	3930	.44	.59	.74	46.0	13.5	4430	.44	.60	.75
13ACC-048 — CB28UH-042 - CB29M-46 TXV COOLING CAPACITY																										
63°F (17°C)	1450	685	46.7	13.7	3070	.74	.89	.99	45.0	13.2	3460	.76	.90	1.00	43.3	12.7	3910	.77	.92	1.00	41.5	12.2	4430	.78	.94	1.00
	1550	730	47.2	13.8	3070	.76	.90	1.00	45.5	13.3	3470	.77	.92	1.00	43.8	12.8	3920	.79	.94	1.00	42.0	12.3	4440	.80	.95	1.00
	1650	780	47.6	14.0	3080	.77	.92	1.00	46.0	13.5	3470	.79	.94	1.00	44.2	13.0	3920	.80	.95	1.00	42.4	12.4	4440	.82	.97	1.00
67°F (19°C)	1450	685	49.5	14.5	3100	.58	.72	.85	47.7	14.0	3490	.58	.73	.87	45.9	13.5	3940	.59	.74	.89	43.9	12.9	4450	.60	.76	.90
	1550	730	49.9	14.6	3100	.59	.73	.87	48.2	14.1	3490	.59	.75	.89	46.3	13.6	3940	.60	.76	.91	44.3	13.0	4460	.61	.78	.93
	1650	780	50.4	14.8	3100	.60	.75	.89	48.5	14.2	3500	.60	.76	.91	46.6	13.7	3950	.61	.78	.93	44.6	13.1	4460	.62	.80	.95
71°F (22°C)	1450	685	52.8	15.5	3130	.43	.56	.69	50.9	14.9	3530	.43	.57	.71	48.9	14.3	3980	.43	.58	.72	46.9	13.7	4490	.44	.59	.74
	1550	730	53.2	15.6	3130	.43	.57	.71	51.3	15.0	3530	.44	.58	.72	49.3	14.4	3980	.44	.59	.74	47.3	13.9	4490	.44	.60	.75
	1650	780	53.6	15.7	3140	.44	.58	.73	51.7	15.2	3530	.44	.59	.74	49.7	14.6	3990	.44	.60	.76	47.6	14.0	4490	.45	.61	.77
13ACC-048 — CB30M-46 - CB30U-41/46 TXV COOLING CAPACITY																										
63°F (17°C)	1250	590	45.9	13.5	3020	.71	.84	.96	44.2	13.0	3410	.72	.86	.97	42.5	12.5	3860	.73	.87	.99	40.7	11.9	4370	.75	.89	1.00
	1400	660	46.8	13.7	3030	.73	.87	.99	45.1	13.2	3420	.75	.89	1.00	43.4	12.7	3860	.76	.91	1.00	41.6	12.2	4370	.77	.92	1.00
	1550	730	47.6	14.0	3040	.76	.90	1.00	45.9	13.5	3420	.77	.92	1.00	44.1	12.9	3870	.78	.94	1.00	42.3	12.4	4380	.80	.95	1.00
67°F (19°C)	1250	590	48.9	14.3	3050	.56	.69	.81	47.2	13.8	3440	.57	.70	.82	45.3	13.3	3880	.57	.71	.84	43.4	12.7	4390	.58	.72	.86
	1400	660	49.7	14.6	3060	.57	.71	.84	48.0	14.1	3450	.58	.72	.86	46.1	13.5	3890	.59	.73	.87	44.1	12.9	4390	.60	.75	.89
	1550	730	50.4	14.8	3060	.59	.73	.87	48.6	14.2	3460	.59	.75	.89	46.7	13.7	3900	.60	.76	.91	44.7	13.1	4400	.61	.78	.93
71°F (22°C)	1250	590	52.2	15.3	3080	.42	.54	.66	50.4	14.8	3470	.43	.55	.67	48.4	14.2	3920	.43	.55	.68	46.4	13.6	4420	.43	.56	.69
	1400	660	53.1	15.6	3090	.43	.56	.68	51.2	15.0	3480	.43	.56	.70	49.2	14.4	3930	.43	.57	.71	47.1	13.8	4430	.44	.58	.72
	1550	730	53.8	15.8	3100	.43	.57	.71	51.8	15.2	3490	.43	.58	.72	49.8	14.6	3940	.44	.59	.74	47.7	14.0	4440	.44	.60	.75
13ACC-048 — CB28UH-048 - CB29M-51 TXV COOLING CAPACITY																										
63°F (17°C)	1300	615	46.8	13.7	3040	.72	.85	.97	45.1	13.2	3440	.73	.87	.98	43.4	12.7	3890	.74	.88	.99	41.6	12.2	4390	.76	.90	1.00
	1450	685	47.7	14.0	3050	.74	.88	.99	46.0	13.5	3440	.75	.90	1.00	44.2	13.0	3890	.77	.92	1.00	42.4	12.4	4400	.78	.93	1.00
	1600	755	48.5	14.2	3060	.77	.91	1.00	46.8	13.7	3450	.78	.93	1.00	44.9	13.2	3900	.79	.95	1.00	43.1	12.6	4400	.81	.96	1.00
67°F (19°C)	1300	615	49.9	14.6	3070	.56	.69	.82	48.1	14.1	3460	.57	.70	.83	46.2	13.5	3910	.58	.72	.85	44.2	13.0	4410	.59	.73	.87
	1450	685	50.6	14.8	3080	.58	.72	.85	48.8	14.3	3470	.58	.73	.87	46.9	13.7	3910	.59	.74	.88	44.9	13.2	4420	.60	.76	.90
	1600	755	51.3	15.0	3080	.59	.74	.88	49.5	14.5	3470	.60	.75	.90	47.5	13.9	3920	.61	.77	.92	45.4	13.3	4430	.62	.79	.94
71°F (22°C)	1300	615	53.2	15.6	3100	.42	.55	.67	51.3	15.0	3500	.43	.55	.68	49.3	14.4	3950	.43	.56	.69	47.3	13.9	4450	.43	.57	.70
	1450	685	54.0	15.8	3110	.43	.56	.69	52.1	15.3	3510	.43	.57	.70	50.1	14.7	3960	.43	.58	.72	47.9	14.0	4460	.44	.59	.73
	1600	755	54.7	16.0	3120	.43	.58	.72	52.7	15.4	3510	.44	.58	.73	50.7	14.9	3960	.44	.59	.75	48.5	14.2	4470	.44	.60	.76
13ACC-048 — CB28UH-060 - CB29M-65 TXV COOLING CAPACITY																										
63°F (17°C)	1400	660	47.7	14.0	3040	.73	.87	.99	46.0	13.5	3430	.75	.89	1.00	44.2	13.0	3870	.76	.91	1.00	42.4	12.4	4380	.77	.92	1.00
	1600	755	48.7	14.3	3050	.77	.91	1.00	47.0	13.8	3440	.78	.93	1.00	45.2	13.2	3890	.79	.95	1.00	43.3	12.7	4390	.81	.96	1.00
	1800	850	49.7	14.6	3060	.80	.95	1.00	48.0	14.1	3450	.81	.96	1.00	46.1	13.5	3890	.83	.98	1.00	44.3	13.0	4400	.84	.99	1.00
67°F (19°C)	1400	660	50.7	14.9	3070	.57	.71	.84	48.9	14.3	3460	.58	.72	.86	46.9	13.7	3900	.59	.73	.87	45.0	13.2	4410	.60	.75	.89
	1600	755	51.6	15.1	3070	.59	.74	.88	49.8	14.6	3460	.60	.75	.90	47.8	14.0	3910	.61	.77	.92	45.7	13.4	4420	.62	.79	.94
	1800	850	52.4	15.4	3080	.61	.77	.92	50.5	14.8	3480	.62	.79	.94	48.4	14.2	3920	.63	.80	.95	46.4	13.6	4430	.64	.82	.97
71°F (22°C)	1400	660	54.1	15.9	3100	.43	.56	.68	52.2	15.3	3490	.43	.56	.70	50.1	14.7	3940	.43	.57	.71	48.0	14.1	4440	.44	.58	.72
	1600	755	55.0	16.1	3110	.43	.58	.72	53.1	15.6	3500	.44	.58	.73	51.0	14.9	3950	.44	.59	.75	48.8	14.3	4460	.44	.60	.76
	1800	850	55.7	16.3	3120	.44	.60	.75	53.8	15.8	3510	.44	.60	.76	51.6	15.1	3960	.45	.62	.78	49.3	14.4	4470	.45	.63	.80
13ACC-048 — CB30M-51 - CB30U-51 TXV COOLING CAPACITY																										
63°F (17°C)	1400	660	47.9	14.0	3050	.73	.87	.99	46.1	13.5	3430	.74	.89	1.00	44.3	13.0	3870	.76	.90	1.00	42.4	12.4	4370	.77	.92	1.00
	1600	755	49.0	14.4	3060	.76	.91	1.00	47.2	13.8	3440	.78	.93	1.00	45.3	13.3	3890	.79	.95	1.00	43.4	12.7	4390	.81	.97	1.00
	1800	850	50.0	14.7	3060	.79	.95	1.00	48.2	14.1	3450	.81	.96	1.00	46.3	13.6	3900	.82	.98	1.00	44.4	13.0	4400	.84	1.00	1.00
67°F (19°C)	1400	660	51.0	14.9	3080	.57	.71	.84	49.2	14.4	3470	.58	.72	.85	47.2	13.8	3910	.58	.73	.87	45.1	13.2	4410	.59	.75	.89
	1600	755	52.1	15.3	3090	.59	.74	.88	50.1	14.7	3480	.60	.75	.90	48.0	14.1	3920	.61	.77	.92	45.9	13.5	4420	.62	.78	.94
	1800	850	52.9	15.5	3100	.61	.77	.92	50.9	14.9	3490	.62	.78	.94	48.8	14.3	3930	.63	.80	.95	46.6	13.7	4430	.64	.82	.97
71°F (22°C)	1400	660	54.5	16.0	3120	.43	.55	.68	52.6	15.4	3510	.43	.56	.69	50.4	14.8	3950	.43	.57	.71	48.2	14.1	4450	.44	.58	.72
	1600	755	55.5	16.3	3130	.43	.57	.71	53.5	15.7	3520	.44	.58	.73	51.3	15.0	3970	.44	.59	.74	49.1	14.4	4470	.44	.60	.76
	1800	850	56.3	16.5	3140	.44	.59	.75	54.3	15.9	3530	.44	.60	.76	52.0	15.2	3980	.45	.61	.78	49.7	14.6	4480	.45	.63	.80

RATINGS — 4 TON (-048)

NOTE - For Temperatures and Capacities not shown in tables, see bulletin - Cooling Unit Rating Table Correction Factor Data in Miscellaneous Engineering Data section.

Entering Wet Bulb Temperature	Total Air Volume		Outdoor Air Temperature Entering Outdoor Coil: 85°F (29°C)						95°F (35°C)						105°F (41°C)						115°F (46°C)					
			Total Cooling Capacity		Comp Motor kW Input	Sensible To Total Ratio (S/T) Dry Bulb			Total Cooling Capacity		Comp Motor kW Input	Sensible To Total Ratio (S/T) Dry Bulb			Total Cooling Capacity		Comp Motor kW Input	Sensible To Total Ratio (S/T) Dry Bulb			Total Cooling Capacity		Comp Motor kW Input	Sensible To Total Ratio (S/T) Dry Bulb		
	cfm	L/s	kBtuh	kW		75°F 24°C	80°F 27°C	85°F 29°C	kBtuh	kW		75°F 24°C	80°F 27°C	85°F 29°C	kBtuh	kW		75°F 24°C	80°F 27°C	85°F 29°C	kBtuh	kW		75°F 24°C	80°F 27°C	85°F 29°C
13ACC-048 — CB30M-65 - CB30U-65 TXV COOLING CAPACITY																										
63°F (17°C)	1400	660	47.9	14.0	3060	.73	.87	.99	46.2	13.5	3450	.74	.89	1.00	44.3	13.0	3890	.76	.90	1.00	42.4	12.4	4400	.77	.92	1.00
	1600	755	49.0	14.4	3070	.76	.91	1.00	47.2	13.8	3460	.78	.93	1.00	45.3	13.3	3910	.79	.95	1.00	43.4	12.7	4410	.81	.97	1.00
	1800	850	50.0	14.7	3080	.79	.95	1.00	48.2	14.1	3470	.81	.96	1.00	46.3	13.6	3920	.82	.98	1.00	44.4	13.0	4420	.84	1.00	1.00
67°F (19°C)	1400	660	51.1	15.0	3090	.57	.70	.84	49.2	14.4	3480	.58	.72	.85	47.2	13.8	3930	.58	.73	.87	45.1	13.2	4430	.59	.75	.89
	1600	755	52.1	15.3	3100	.59	.74	.88	50.1	14.7	3500	.60	.75	.90	48.1	14.1	3940	.61	.77	.91	45.9	13.5	4440	.62	.78	.94
	1800	850	52.9	15.5	3110	.61	.77	.92	50.9	14.9	3510	.62	.78	.94	48.8	14.3	3950	.63	.80	.95	46.6	13.7	4460	.64	.82	.97
71°F (22°C)	1400	660	54.6	16.0	3130	.43	.55	.68	52.6	15.4	3530	.43	.56	.69	50.5	14.8	3970	.43	.57	.70	48.3	14.2	4480	.43	.58	.72
	1600	755	55.6	16.3	3150	.43	.57	.71	53.5	15.7	3540	.44	.58	.73	51.3	15.0	3990	.44	.59	.74	49.1	14.4	4490	.44	.60	.76
	1800	850	56.4	16.5	3160	.44	.59	.75	54.3	15.9	3550	.44	.60	.76	52.0	15.2	4000	.45	.61	.78	49.7	14.6	4500	.45	.63	.80
13ACC-048 — CB31MV-51 TXV COOLING CAPACITY																										
63°F (17°C)	1425	670	47.9	14.0	3050	.74	.88	.99	46.2	13.5	3440	.75	.90	1.00	44.3	13.0	3880	.76	.91	1.00	42.4	12.4	4380	.78	.93	1.00
	1625	765	48.9	14.3	3060	.77	.92	1.00	47.1	13.8	3450	.78	.93	1.00	45.2	13.2	3890	.80	.95	1.00	43.3	12.7	4390	.81	.97	1.00
	1805	850	49.8	14.6	3070	.79	.95	1.00	48.0	14.1	3460	.81	.97	1.00	46.1	13.5	3900	.83	.98	1.00	44.2	13.0	4400	.84	1.00	1.00
67°F (19°C)	1425	670	51.0	14.9	3080	.57	.71	.85	49.1	14.4	3470	.58	.72	.86	47.1	13.8	3910	.59	.74	.88	45.0	13.2	4420	.60	.75	.90
	1625	765	51.9	15.2	3090	.59	.74	.88	49.9	14.6	3480	.60	.76	.90	47.9	14.0	3930	.61	.77	.92	45.8	13.4	4430	.62	.79	.94
	1805	850	52.6	15.4	3100	.61	.77	.92	50.6	14.8	3490	.62	.79	.94	48.5	14.2	3930	.63	.80	.96	46.4	13.6	4440	.64	.82	.98
71°F (22°C)	1425	670	54.5	16.0	3120	.43	.56	.69	52.5	15.4	3510	.43	.57	.70	50.4	14.8	3960	.43	.57	.71	48.2	14.1	4460	.44	.58	.73
	1625	765	55.4	16.2	3130	.43	.58	.72	53.3	15.6	3530	.44	.58	.73	51.1	15.0	3970	.44	.59	.75	48.9	14.3	4470	.44	.61	.76
	1805	850	56.1	16.4	3140	.44	.59	.75	54.0	15.8	3530	.44	.60	.76	51.7	15.2	3980	.45	.61	.78	49.4	14.5	4480	.45	.63	.80
13ACC-048 — CB31MV-65 TXV COOLING CAPACITY																										
63°F (17°C)	1425	670	48.4	14.2	3070	.74	.88	.99	46.6	13.7	3450	.75	.90	1.00	44.7	13.1	3900	.76	.91	1.00	42.8	12.5	4400	.78	.93	1.00
	1625	765	49.3	14.4	3070	.77	.92	1.00	47.5	13.9	3470	.78	.93	1.00	45.6	13.4	3910	.80	.95	1.00	43.7	12.8	4420	.81	.97	1.00
	1805	850	50.2	14.7	3080	.79	.95	1.00	48.4	14.2	3470	.81	.97	1.00	46.5	13.6	3920	.83	.98	1.00	44.6	13.1	4430	.84	1.00	1.00
67°F (19°C)	1425	670	51.5	15.1	3100	.57	.71	.85	49.6	14.5	3490	.58	.72	.86	47.6	14.0	3930	.59	.74	.88	45.5	13.3	4440	.60	.75	.90
	1625	765	52.4	15.4	3110	.59	.74	.88	50.4	14.8	3500	.60	.76	.90	48.3	14.2	3950	.61	.77	.92	46.2	13.5	4450	.62	.79	.94
	1805	850	53.1	15.6	3110	.61	.77	.92	51.1	15.0	3510	.62	.79	.94	49.0	14.4	3950	.63	.80	.96	46.8	13.7	4460	.64	.82	.98
71°F (22°C)	1425	670	55.0	16.1	3140	.43	.56	.69	53.0	15.5	3530	.43	.57	.70	50.9	14.9	3980	.43	.57	.71	48.6	14.2	4480	.44	.58	.73
	1625	765	55.9	16.4	3150	.43	.58	.72	53.8	15.8	3540	.44	.58	.73	51.6	15.1	3990	.44	.59	.75	49.4	14.5	4490	.44	.61	.76
	1805	850	56.6	16.6	3160	.44	.59	.75	54.5	16.0	3550	.44	.60	.76	52.2	15.3	4000	.45	.61	.78	49.9	14.6	4500	.45	.63	.80
13ACC-048 — CVP10-51/EC10Q4 TXV COOLING CAPACITY																										
63°F (17°C)	1400	660	46.3	13.6	3020	.72	.86	.98	44.7	13.1	3410	.73	.88	.99	42.9	12.6	3850	.75	.89	1.00	41.1	12.0	4350	.76	.91	1.00
	1600	755	47.4	13.9	3030	.75	.90	1.00	45.7	13.4	3420	.77	.92	1.00	43.9	12.9	3860	.78	.94	1.00	42.1	12.3	4360	.80	.95	1.00
	1800	850	48.4	14.2	3040	.78	.94	1.00	46.7	13.7	3430	.80	.95	1.00	44.9	13.2	3870	.82	.97	1.00	43.0	12.6	4370	.83	.99	1.00
67°F (19°C)	1400	660	49.4	14.5	3050	.57	.70	.83	47.6	14.0	3440	.57	.71	.84	45.7	13.4	3880	.58	.72	.86	43.7	12.8	4380	.59	.74	.88
	1600	755	50.3	14.7	3060	.58	.73	.87	48.5	14.2	3450	.59	.74	.89	46.6	13.7	3890	.60	.76	.91	44.5	13.0	4390	.61	.77	.93
	1800	850	51.2	15.0	3070	.60	.76	.91	49.2	14.4	3460	.61	.78	.93	47.2	13.8	3900	.62	.79	.94	45.2	13.2	4400	.63	.81	.96
71°F (22°C)	1400	660	52.6	15.4	3090	.43	.55	.67	50.8	14.9	3480	.43	.56	.68	48.8	14.3	3920	.43	.56	.70	46.7	13.7	4420	.43	.57	.71
	1600	755	53.6	15.7	3100	.43	.57	.71	51.7	15.2	3490	.43	.58	.72	49.6	14.5	3930	.44	.59	.73	47.5	13.9	4430	.44	.60	.75
	1800	850	54.4	15.9	3110	.44	.59	.74	52.4	15.4	3500	.44	.60	.75	50.3	14.7	3940	.44	.61	.77	48.1	14.1	4440	.45	.62	.79
13ACC-048 — CVP10-65/EC10Q5 TXV COOLING CAPACITY																										
63°F (17°C)	1400	660	47.9	14.0	3030	.73	.87	.99	46.2	13.5	3410	.75	.89	1.00	44.4	13.0	3850	.76	.91	1.00	42.5	12.5	4350	.77	.92	1.00
	1600	755	49.0	14.4	3040	.77	.92	1.00	47.3	13.9	3420	.78	.93	1.00	45.4	13.3	3860	.79	.95	1.00	43.5	12.7	4360	.81	.97	1.00
	1800	850	50.1	14.7	3040	.80	.95	1.00	48.3	14.2	3430	.81	.97	1.00	46.5	13.6	3870	.83	.98	1.00	44.6	13.1	4370	.85	1.00	1.00
67°F (19°C)	1400	660	50.9	14.9	3050	.57	.71	.84	49.0	14.4	3440	.58	.72	.86	47.1	13.8	3880	.59	.73	.87	45.1	13.2	4380	.60	.75	.89
	1600	755	51.9	15.2	3060	.59	.74	.88	50.0	14.7	3450	.60	.76	.90	48.0	14.1	3890	.61	.77	.92	45.9	13.5	4390	.62	.79	.94
	1800	850	52.7	15.4	3070	.61	.78	.92	50.8	14.9	3460	.62	.79	.94	48.7	14.3	3900	.63	.81	.96	46.6	13.7	4410	.64	.83	.98
71°F (22°C)	1400	660	54.3	15.9	3090	.43	.56	.68	52.3	15.3	3480	.43	.56	.69	50.3	14.7	3920	.43	.57	.71	48.1	14.1	4420	.44	.58	.72
	1600	755	55.3	16.2	3110	.43	.58	.72	53.3	15.6	3490	.44	.58	.73	51.1	15.0	3940	.44	.59	.75	48.9	14.3	4430	.44	.61	.76
	1800	850	56.1	16.4	3120	.44	.60	.75	54.0	15.8	3500	.44	.61	.77	51.8	15.2	3950	.45	.62	.79	49.5	14.5	4450	.45	.63	.80

RATINGS — 5 TON

Entering Wet Bulb Temperature	cfm	L/s	85°F (29°C) Total Cooling Capacity kBtuh	kW	Comp Motor kW Input	75°F 24°C	80°F 27°C	85°F 29°C	95°F (35°C) Total Cooling Capacity kBtuh	kW	Comp Motor kW Input	75°F 24°C	80°F 27°C	85°F 29°C	105°F (41°C) Total Cooling Capacity kBtuh	kW	Comp Motor kW Input	75°F 24°C	80°F 27°C	85°F 29°C	115°F (46°C) Total Cooling Capacity kBtuh	kW	Comp Motor kW Input	75°F 24°C	80°F 27°C	85°F 29°C
13ACC-060 — C26-51/65 TXV and RFC COOLING CAPACITY																										
63°F (17°C)	1800	850	57.9	17.0	3.98	.72	.87	1.00	55.9	16.4	4.48	.73	.89	1.00	53.8	15.8	5.04	.74	.91	1.00	51.6	15.1	5.66	.76	.93	1.00
	2000	945	58.9	17.3	4.00	.74	.91	1.00	56.9	16.7	4.49	.76	.93	1.00	54.8	16.1	5.05	.78	.95	1.00	52.5	15.4	5.68	.80	.97	1.00
	2200	1040	59.9	17.6	4.00	.77	.95	1.00	57.9	17.0	4.50	.79	.96	1.00	55.7	16.3	5.06	.81	.98	1.00	53.5	15.7	5.69	.83	.99	1.00
67°F (19°C)	1800	850	61.4	18.0	4.01	.56	.69	.84	59.2	17.3	4.51	.56	.71	.86	56.9	16.7	5.08	.57	.72	.88	54.6	16.0	5.69	.58	.73	.90
	2000	945	62.2	18.2	4.02	.57	.72	.88	60.0	17.6	4.52	.58	.73	.90	57.7	16.9	5.09	.59	.75	.92	55.3	16.2	5.71	.60	.77	.94
	2200	1040	63.0	18.5	4.03	.59	.75	.91	60.7	17.8	4.54	.60	.76	.93	58.4	17.1	5.09	.61	.78	.95	55.9	16.4	5.71	.62	.80	.97
71°F (22°C)	1800	850	65.4	19.2	4.05	.41	.54	.67	63.1	18.5	4.55	.42	.55	.68	60.6	17.8	5.12	.42	.56	.70	58.1	17.0	5.75	.42	.57	.71
	2000	945	66.2	19.4	4.06	.42	.56	.70	63.8	18.7	4.56	.42	.57	.71	61.4	18.0	5.12	.43	.58	.73	58.8	17.2	5.74	.43	.59	.74
	2200	1040	66.9	19.6	4.06	.42	.58	.73	64.5	18.9	4.57	.43	.58	.74	62.1	18.2	5.13	.43	.60	.76	59.4	17.4	5.75	.44	.61	.78
13ACC-060 — C23-51/65 TXV and RFC COOLING CAPACITY																										
63°F (17°C)	1800	850	58.7	17.2	4.00	.71	.87	.99	56.7	16.6	4.50	.72	.88	1.00	54.5	16.0	5.06	.73	.90	1.00	52.3	15.3	5.69	.75	.92	1.00
	2000	945	59.7	17.5	4.01	.73	.90	1.00	57.6	16.9	4.51	.75	.92	1.00	55.5	16.3	5.07	.77	.94	1.00	53.2	15.6	5.70	.78	.96	1.00
	2200	1040	60.6	17.8	4.02	.76	.93	1.00	58.6	17.2	4.52	.78	.95	1.00	56.4	16.5	5.08	.79	.97	1.00	54.2	15.9	5.70	.81	.98	1.00
67°F (19°C)	1800	850	62.4	18.3	4.03	.55	.69	.83	60.1	17.6	4.53	.56	.70	.85	57.8	16.9	5.09	.57	.71	.87	55.4	16.2	5.72	.58	.72	.89
	2000	945	63.2	18.5	4.03	.57	.71	.87	61.0	17.9	4.54	.57	.72	.88	58.6	17.2	5.11	.58	.74	.90	56.2	16.5	5.73	.59	.76	.92
	2200	1040	64.0	18.8	4.04	.58	.74	.90	61.7	18.1	4.55	.59	.75	.92	59.3	17.4	5.11	.60	.77	.94	56.8	16.6	5.74	.61	.79	.96
71°F (22°C)	1800	850	66.5	19.5	4.07	.41	.54	.66	64.1	18.8	4.56	.41	.54	.67	61.7	18.1	5.13	.42	.55	.69	59.1	17.3	5.76	.42	.56	.70
	2000	945	67.3	19.7	4.08	.42	.55	.69	65.0	19.0	4.57	.42	.56	.70	62.5	18.3	5.15	.42	.57	.71	59.9	17.6	5.77	.42	.58	.73
	2200	1040	68.1	20.0	4.08	.42	.57	.71	65.7	19.3	4.58	.43	.58	.73	63.1	18.5	5.15	.43	.59	.75	60.5	17.7	5.78	.43	.60	.77

NOTE - For Temperatures and Capacities not shown in tables, see bulletin - Cooling Unit Rating Table Correction Factor Data in Miscellaneous Engineering Data section.

Entering Wet Bulb Temperature	Total Air Volume		Outdoor Air Temperature Entering Outdoor Coil																							
			85°F (29°C)						95°F (35°C)						105°F (41°C)						115°F (46°C)					
			Total Cooling Capacity		Comp Motor kW Input	Sensible To Total Ratio (S/T) Dry Bulb			Total Cooling Capacity		Comp Motor kW Input	Sensible To Total Ratio (S/T) Dry Bulb			Total Cooling Capacity		Comp Motor kW Input	Sensible To Total Ratio (S/T) Dry Bulb			Total Cooling Capacity		Comp Motor kW Input	Sensible To Total Ratio (S/T) Dry Bulb		
	cfm	L/s	kBtuh	kW		75°F 24°C	80°F 27°C	85°F 29°C	kBtuh	kW		75°F 24°C	80°F 27°C	85°F 29°C	kBtuh	kW		75°F 24°C	80°F 27°C	85°F 29°C	kBtuh	kW		75°F 24°C	80°F 27°C	85°F 29°C
13ACC-060 — C33-48C TXV and RFC COOLING CAPACITY																										
63°F (17°C)	1800	850	59.2	17.3	4.02	.71	.86	.98	57.2	16.8	4.52	.72	.88	.99	55.1	16.1	5.09	.73	.90	1.00	52.9	15.5	5.73	.75	.92	1.00
	2000	945	60.1	17.6	4.02	.73	.90	1.00	58.2	17.1	4.53	.75	.91	1.00	56.0	16.4	5.10	.76	.93	1.00	53.8	15.8	5.75	.78	.95	1.00
	2200	1040	61.0	17.9	4.03	.76	.93	1.00	59.0	17.3	4.54	.77	.94	1.00	56.9	16.7	5.11	.79	.96	1.00	54.6	16.0	5.75	.81	.98	1.00
67°F (19°C)	1800	850	62.8	18.4	4.04	.55	.69	.83	60.7	17.8	4.55	.56	.70	.84	58.4	17.1	5.12	.56	.71	.86	56.0	16.4	5.75	.57	.72	.88
	2000	945	63.6	18.6	4.05	.57	.71	.86	61.5	18.0	4.55	.57	.72	.88	59.2	17.3	5.13	.58	.74	.90	56.7	16.6	5.76	.59	.75	.92
	2200	1040	64.4	18.9	4.05	.58	.73	.90	62.2	18.2	4.56	.59	.75	.91	59.8	17.5	5.13	.60	.76	.93	57.3	16.8	5.77	.60	.79	.95
71°F (22°C)	1800	850	66.9	19.6	4.08	.41	.54	.66	64.6	18.9	4.59	.41	.54	.67	62.3	18.3	5.16	.42	.55	.69	59.7	17.5	5.80	.42	.56	.70
	2000	945	67.7	19.8	4.09	.42	.55	.69	65.4	19.2	4.59	.42	.56	.70	63.0	18.5	5.17	.42	.57	.71	60.4	17.7	5.80	.43	.58	.73
	2200	1040	68.4	20.0	4.09	.42	.57	.71	66.1	19.4	4.60	.42	.57	.72	63.6	18.6	5.17	.43	.58	.74	61.0	17.9	5.80	.43	.59	.76
13ACC-060 — C33-60D TXV and RFC COOLING CAPACITY																										
63°F (17°C)	1800	850	59.6	17.5	4.02	.71	.86	.98	57.6	16.9	4.52	.72	.88	1.00	55.4	16.2	5.10	.73	.90	1.00	53.1	15.6	5.73	.75	.92	1.00
	2000	945	60.7	17.8	4.03	.73	.89	1.00	58.6	17.2	4.53	.74	.91	1.00	56.4	16.5	5.11	.76	.93	1.00	54.1	15.9	5.73	.78	.95	1.00
	2200	1040	61.6	18.1	4.04	.76	.93	1.00	59.5	17.4	4.55	.77	.94	1.00	57.3	16.8	5.11	.79	.96	1.00	55.0	16.1	5.74	.81	.98	1.00
67°F (19°C)	1800	850	63.4	18.6	4.05	.55	.68	.83	61.2	17.9	4.55	.56	.69	.84	58.9	17.3	5.12	.56	.71	.86	56.4	16.5	5.76	.57	.72	.88
	2000	945	64.3	18.8	4.06	.56	.71	.86	62.0	18.2	4.56	.57	.72	.88	59.7	17.5	5.13	.58	.73	.90	57.1	16.7	5.77	.59	.75	.92
	2200	1040	65.1	19.1	4.07	.58	.73	.89	62.8	18.4	4.57	.59	.75	.91	60.3	17.7	5.15	.59	.76	.93	57.8	16.9	5.77	.61	.78	.95
71°F (22°C)	1800	850	67.6	19.8	4.09	.41	.54	.66	65.2	19.1	4.59	.41	.54	.67	62.8	18.4	5.16	.42	.55	.68	60.2	17.6	5.80	.42	.56	.70
	2000	945	68.5	20.1	4.10	.42	.55	.68	66.1	19.4	4.60	.42	.56	.70	63.6	18.6	5.17	.42	.57	.71	60.9	17.8	5.81	.42	.58	.73
	2200	1040	69.2	20.3	4.11	.42	.56	.71	66.8	19.6	4.61	.42	.57	.72	64.2	18.8	5.18	.43	.58	.74	61.5	18.0	5.81	.43	.59	.76
13ACC-060 — C33-50/60C TXV and RFC COOLING CAPACITY																										
63°F (17°C)	1800	850	60.1	17.6	4.02	.71	.86	.98	58.1	17.0	4.52	.72	.88	1.00	55.9	16.4	5.09	.73	.90	1.00	53.6	15.7	5.73	.75	.92	1.00
	2000	945	61.1	17.9	4.03	.73	.90	1.00	59.1	17.3	4.53	.75	.91	1.00	56.9	16.7	5.11	.76	.93	1.00	54.5	16.0	5.75	.78	.95	1.00
	2200	1040	62.0	18.2	4.04	.76	.93	1.00	60.0	17.6	4.54	.77	.94	1.00	57.7	16.9	5.12	.79	.96	1.00	55.5	16.3	5.74	.81	.98	1.00
67°F (19°C)	1800	850	63.9	18.7	4.05	.55	.68	.83	61.7	18.1	4.56	.56	.69	.84	59.3	17.4	5.12	.56	.71	.86	56.9	16.7	5.76	.57	.72	.88
	2000	945	64.8	19.0	4.06	.56	.71	.86	62.5	18.3	4.56	.57	.72	.88	60.1	17.6	5.13	.58	.73	.90	57.6	16.9	5.77	.59	.75	.92
	2200	1040	65.5	19.2	4.06	.58	.73	.90	63.2	18.5	4.57	.59	.75	.91	60.8	17.8	5.14	.59	.76	.93	58.2	17.1	5.78	.61	.78	.95
71°F (22°C)	1800	850	68.0	19.9	4.09	.41	.54	.66	65.7	19.3	4.59	.41	.54	.67	63.3	18.6	5.16	.42	.55	.68	60.7	17.8	5.79	.42	.56	.70
	2000	945	68.9	20.2	4.09	.42	.55	.68	66.5	19.5	4.60	.42	.56	.70	64.0	18.8	5.17	.42	.57	.71	61.4	18.0	5.80	.43	.58	.73
	2200	1040	69.7	20.4	4.10	.42	.56	.71	67.2	19.7	4.61	.42	.57	.72	64.7	19.0	5.17	.43	.58	.74	62.0	18.2	5.82	.43	.59	.76
13ACC-060 — C26-65EAP TXV and RFC COOLING CAPACITY																										
63°F (17°C)	1800	850	60.6	17.8	4.03	.72	.87	1.00	58.5	17.1	4.52	.73	.89	1.00	56.3	16.5	5.09	.74	.91	1.00	53.9	15.8	5.72	.76	.93	1.00
	2000	945	61.7	18.1	4.03	.74	.91	1.00	59.6	17.5	4.53	.76	.93	1.00	57.3	16.8	5.10	.77	.95	1.00	55.0	16.1	5.73	.79	.97	1.00
	2200	1040	62.8	18.4	4.04	.77	.94	1.00	60.6	17.8	4.55	.79	.96	1.00	58.3	17.1	5.11	.80	.98	1.00	56.0	16.4	5.74	.82	1.00	1.00
67°F (19°C)	1800	850	64.4	18.9	4.06	.56	.69	.84	62.1	18.2	4.56	.56	.70	.85	59.7	17.5	5.13	.57	.72	.87	57.1	16.7	5.75	.58	.73	.90
	2000	945	65.3	19.1	4.07	.57	.72	.88	63.0	18.5	4.57	.58	.73	.89	60.5	17.7	5.13	.59	.75	.91	57.9	17.0	5.77	.60	.77	.94
	2200	1040	66.1	19.4	4.07	.59	.75	.91	63.7	18.7	4.57	.60	.76	.93	61.2	17.9	5.15	.60	.78	.95	58.6	17.2	5.78	.62	.80	.97
71°F (22°C)	1800	850	68.6	20.1	4.09	.41	.54	.67	66.2	19.4	4.60	.41	.55	.68	63.6	18.6	5.16	.42	.56	.69	60.9	17.8	5.79	.42	.57	.71
	2000	945	69.6	20.4	4.11	.42	.56	.70	67.0	19.6	4.61	.42	.57	.71	64.4	18.9	5.17	.42	.58	.72	61.7	18.1	5.80	.43	.59	.74
	2200	1040	70.3	20.6	4.11	.42	.57	.72	67.8	19.9	4.61	.43	.58	.74	65.1	19.1	5.18	.43	.59	.76	62.2	18.2	5.82	.44	.61	.78
13ACC-060 — C33-62D TXV and RFC COOLING CAPACITY																										
63°F (17°C)	1800	850	61.1	17.9	4.03	.71	.87	.99	59.0	17.3	4.54	.72	.89	1.00	56.7	16.6	5.10	.74	.91	1.00	54.4	15.9	5.73	.75	.93	1.00
	2000	945	62.2	18.2	4.04	.74	.91	1.00	60.0	17.6	4.54	.75	.92	1.00	57.8	16.9	5.11	.77	.94	1.00	55.4	16.2	5.74	.79	.96	1.00
	2200	1040	63.2	18.5	4.05	.77	.94	1.00	61.1	17.9	4.55	.78	.95	1.00	58.8	17.2	5.12	.80	.97	1.00	56.4	16.5	5.75	.82	.99	1.00
67°F (19°C)	1800	850	64.9	19.0	4.06	.55	.69	.83	62.6	18.3	4.57	.56	.70	.85	60.2	17.6	5.14	.57	.71	.87	57.6	16.9	5.76	.58	.73	.89
	2000	945	65.8	19.3	4.08	.57	.71	.87	63.5	18.6	4.58	.58	.73	.89	61.0	17.9	5.14	.59	.74	.91	58.4	17.1	5.77	.60	.76	.93
	2200	1040	66.7	19.5	4.08	.58	.74	.91	64.3	18.8	4.58	.59	.76	.92	61.7	18.1	5.15	.60	.78	.94	59.1	17.3	5.79	.61	.79	.97
71°F (22°C)	1800	850	69.2	20.3	4.10	.41	.54	.67	66.8	19.6	4.61	.41	.55	.68	64.2	18.8	5.18	.42	.55	.69	61.5	18.0	5.80	.42	.56	.70
	2000	945	70.2	20.6	4.11	.42	.56	.69	67.6	19.8	4.62	.42	.56	.70	65.0	19.0	5.18	.42	.57	.72	62.3	18.3	5.81	.43	.58	.74
	2200	1040	70.9	20.8	4.12	.42	.57	.72	68.4	20.0	4.62	.43	.58	.73	65.7	19.3	5.19	.43	.59	.75	62.9	18.4	5.82	.43	.60	.77
13ACC-060 — C33-48C TXV with G60UHV-60C COOLING CAPACITY																										
63°F (17°C)	1565	740	56.9	16.7	3.97	.68	.83	.95	55.0	16.1	4.48	.69	.84	.97	53.0	15.5	5.05	.70	.86	.98	50.8	14.9	5.68	.72	.88	.99
	1765	835	58.0	17.0	3.99	.71	.86	.98	56.1	16.4	4.49	.72	.88	.99	54.1	15.9	5.06	.73	.89	1.00	51.9	15.2	5.69	.75	.91	1.00
	1965	925	59.0	17.3	4.00	.73	.89	1.00	57.1	16.7	4.51	.74	.91	1.00	55.0	16.1	5.07	.76	.93	1.00	52.7	15.4	5.71	.78	.95	1.00
67°F (19°C)	1565	740	60.7	17.8	4.01	.54	.66	.79	58.6	17.2	4.51	.54	.67	.80	56.5	16.6	5.08	.55	.68	.82	54.1	15.9	5.71	.56	.69	.84
	1765	835	61.7	18.1	4.02	.55	.68	.82	59.6	17.5	4.52	.56	.69	.84	57.4	16.8	5.09	.56	.71	.86	55.0	16.1	5.72	.57	.72	.88
	1965	925	62.5	18.3	4.03	.56	.71	.86	60.4	17.7	4.53	.57	.72	.88	58.1	17.0	5.10	.58	.73	.90	55.7	16.3	5.73	.59	.75	.92
71°F (22°C)	1565	740	64.6	18.9	4.04	.41	.52	.63	62.5	18.3	4.55	.41	.53	.64	60.2	17.6	5.12	.41	.53	.65	57.8	16.9	5.75	.41	.54	.67
	1765	835	65.7	19.3	4.05	.41	.53	.66	63.4	18.6	4.56	.41	.54	.67	61.1	17.9	5.13	.41	.55	.68	58.7	17.2	5.76	.42	.56	.69
	1965	925	66.5	19.5	4.06	.42	.55	.68	64.3	18.8	4.57	.42	.56	.69	61.9	18.1	5.14	.42	.56	.71	59.4	17.4	5.77	.42	.57	.73
13ACC-060 — C33-50/60C TXV with G60UHV-60C COOLING CAPACITY																										
63°F (17°C)	1564	740	57.8	16.9	3.99	.68	.82	.95	55.9	16.4	4.49	.69	.84	.96	53.8	15.8	5.06	.70	.85	.98	51.6	15.1	5.69	.72	.87	.99
	1764	835	59.0	17.3	4.00	.71	.86	.98	57.0	16.7	4.50	.72	.87	.99	54.9	16.1	5.07	.73	.89	1.00	52.6	15.4	5.70	.75	.91	1.00
	1964	925	60.0	17.6	4.01	.73	.89	1.00	58.0	17.0	4.51	.74	.91	1.00	55.8	16.4	5.08	.76	.93	1.00	53.6	15.7	5.71	.78	.94	1.00
67°F (19°C)	1564	740	61.6	18.1	4.02	.54	.66	.79	59.6	17.5	4.52	.54	.67	.80	57.3	16.8	5.09	.55	.68	.82	55.0	16.1	5.72	.55	.69	.84
	1764	835	62.7	18.4	4.03	.55	.68	.82	60.6	17.8	4.53	.55	.69	.84	58.3	17.1	5.10	.56	.70	.86	55.9	16.4	5.73	.57	.72	.88
	1964	925	63.6	18.6	4.04	.56	.70	.86	61.4	18.0	4.54	.57	.72	.87	59.1	17.3	5.11	.58	.73	.89	56.6	16.6	5.74	.59	.75	.91
71°F (22°C)	1564	740	65.7	19.3	4.06	.41	.52	.63	63.5	18.6	4.56	.41	.52	.64	61.2	17.9	5.12	.41	.53	.65	58.7	17.2	5.75	.41	.54	.66
	1764	835	66.8	19.6	4.07	.41	.53	.66	64.6	18.9	4.57	.41	.54	.67	62.2	18.2	5.13	.41	.55	.68	59.6	17.5	5.76	.42	.56	.69
	1964	925	67.7	19.8	4.07	.42	.55	.68	65.4	19.2	4.58	.42	.55	.69	62.9	18.4	5.14	.42	.56	.71	60.3	17.7	5.77	.42	.57	.73

NOTE - For Temperatures and Capacities not shown in tables, see bulletin - Cooling Unit Rating Table Correction Factor Data in Miscellaneous Engineering Data section.

Entering Wet Bulb Temperature	Total Air Volume		Outdoor Air Temperature Entering Outdoor Coil																							
			85°F (29°C)						95°F (35°C)						105°F (41°C)						115°F (46°C)					
			Total Cooling Capacity		Comp Motor kW Input	Sensible To Total Ratio (S/T) Dry Bulb			Total Cooling Capacity		Comp Motor kW Input	Sensible To Total Ratio (S/T) Dry Bulb			Total Cooling Capacity		Comp Motor kW Input	Sensible To Total Ratio (S/T) Dry Bulb			Total Cooling Capacity		Comp Motor kW Input	Sensible To Total Ratio (S/T) Dry Bulb		
	cfm	L/s	kBtuh	kW		75°F 24°C	80°F 27°C	85°F 29°C	kBtuh	kW		75°F 24°C	80°F 27°C	85°F 29°C	kBtuh	kW		75°F 24°C	80°F 27°C	85°F 29°C	kBtuh	kW		75°F 24°C	80°F 27°C	85°F 29°C
13ACC-060 — C33-60D TXV with G60UHV-60D-135 COOLING CAPACITY																										
63°F (17°C)	1564	740	57.8	16.9	3.98	.68	.82	.95	55.8	16.4	4.48	.69	.84	.96	53.7	15.7	5.05	.70	.85	.98	51.5	15.1	5.68	.72	.87	.99
	1764	835	59.0	17.3	3.99	.71	.86	.98	57.0	16.7	4.50	.72	.87	.99	54.8	16.1	5.07	.73	.89	1.00	52.5	15.4	5.69	.75	.91	1.00
	1964	925	60.0	17.6	4.00	.73	.89	1.00	58.0	17.0	4.51	.74	.91	1.00	55.8	16.4	5.08	.76	.92	1.00	53.5	15.7	5.70	.78	.95	1.00
67°F (19°C)	1564	740	61.6	18.1	4.02	.54	.66	.79	59.5	17.4	4.52	.54	.66	.80	57.3	16.8	5.08	.55	.68	.81	54.9	16.1	5.71	.55	.69	.83
	1764	835	62.8	18.4	4.03	.55	.68	.82	60.6	17.8	4.53	.55	.69	.84	58.3	17.1	5.09	.56	.70	.85	55.8	16.4	5.73	.57	.72	.88
	1964	925	63.7	18.7	4.04	.56	.70	.86	61.4	18.0	4.54	.57	.72	.87	59.1	17.3	5.10	.58	.73	.89	56.6	16.6	5.73	.59	.75	.91
71°F (22°C)	1564	740	65.7	19.3	4.06	.41	.52	.63	63.5	18.6	4.55	.41	.52	.64	61.2	17.9	5.12	.41	.53	.65	58.7	17.2	5.75	.41	.54	.66
	1764	835	66.9	19.6	4.07	.41	.53	.65	64.6	18.9	4.56	.41	.54	.67	62.1	18.2	5.13	.41	.55	.68	59.6	17.5	5.76	.42	.55	.69
	1964	925	67.8	19.9	4.07	.41	.55	.68	65.4	19.2	4.57	.42	.55	.69	63.0	18.5	5.14	.42	.56	.71	60.3	17.7	5.77	.42	.57	.72
13ACC-060 — C33-62D TXV with G60UHV-60D-135 COOLING CAPACITY																										
63°F (17°C)	1564	740	59.3	17.4	4.00	.69	.83	.96	57.3	16.8	4.50	.69	.84	.97	55.1	16.1	5.06	.71	.86	.99	52.8	15.5	5.69	.72	.88	1.00
	1764	835	60.6	17.8	4.01	.71	.86	.99	58.5	17.1	4.51	.72	.88	1.00	56.3	16.5	5.07	.74	.90	1.00	53.9	15.8	5.70	.75	.92	1.00
	1964	925	61.7	18.1	4.02	.74	.90	1.00	59.6	17.5	4.52	.75	.92	1.00	57.3	16.8	5.08	.77	.94	1.00	54.9	16.1	5.71	.78	.96	1.00
67°F (19°C)	1564	740	63.3	18.6	4.03	.54	.66	.79	61.0	17.9	4.53	.54	.67	.80	58.7	17.2	5.10	.55	.68	.82	56.2	16.5	5.73	.56	.69	.84
	1764	835	64.4	18.9	4.04	.55	.69	.83	62.1	18.2	4.55	.56	.70	.84	59.7	17.5	5.11	.57	.71	.86	57.2	16.8	5.74	.57	.73	.89
	1964	925	65.4	19.2	4.05	.57	.71	.87	63.0	18.5	4.55	.57	.73	.88	60.6	17.8	5.11	.58	.74	.90	58.0	17.0	5.74	.59	.76	.93
71°F (22°C)	1564	740	67.5	19.8	4.07	.41	.52	.64	65.2	19.1	4.57	.41	.53	.64	62.7	18.4	5.14	.41	.53	.66	60.1	17.6	5.77	.41	.54	.67
	1764	835	68.7	20.1	4.08	.41	.54	.66	66.3	19.4	4.58	.41	.54	.67	63.7	18.7	5.15	.42	.55	.69	61.0	17.9	5.77	.42	.56	.70
	1964	925	69.7	20.4	4.09	.42	.55	.69	67.2	19.7	4.59	.42	.56	.70	64.6	18.9	5.16	.42	.57	.72	61.8	18.1	5.78	.43	.58	.73
13ACC-060 — CR26-48N/W-F TXV and RFC COOLING CAPACITY																										
63°F (17°C)	1800	850	57.2	16.8	3.98	.70	.86	.98	55.3	16.2	4.48	.71	.87	.99	53.2	15.6	5.04	.73	.89	1.00	51.0	14.9	5.68	.74	.91	1.00
	2000	945	58.1	17.0	3.99	.73	.89	1.00	56.2	16.5	4.49	.74	.91	1.00	54.1	15.9	5.05	.76	.93	1.00	51.9	15.2	5.69	.77	.94	1.00
	2200	1040	59.0	17.3	4.00	.75	.92	1.00	57.0	16.7	4.50	.77	.94	1.00	54.9	16.1	5.07	.78	.95	1.00	52.7	15.4	5.70	.80	.97	1.00
67°F (19°C)	1800	850	60.8	17.8	4.01	.55	.68	.82	58.8	17.2	4.51	.56	.69	.84	56.5	16.6	5.07	.56	.70	.86	54.2	15.9	5.70	.57	.72	.88
	2000	945	61.6	18.1	4.02	.56	.70	.86	59.5	17.4	4.52	.57	.71	.87	57.2	16.8	5.08	.58	.73	.89	54.9	16.1	5.71	.59	.75	.91
	2200	1040	62.3	18.3	4.02	.57	.73	.89	60.1	17.6	4.52	.58	.74	.91	57.9	17.0	5.09	.59	.76	.92	55.4	16.2	5.72	.60	.78	.94
71°F (22°C)	1800	850	64.8	19.0	4.04	.41	.53	.66	62.6	18.3	4.55	.41	.54	.67	60.3	17.7	5.11	.41	.55	.68	57.8	16.9	5.74	.42	.56	.69
	2000	945	65.6	19.2	4.05	.42	.55	.68	63.4	18.6	4.55	.42	.55	.69	61.0	17.9	5.12	.42	.56	.71	58.5	17.1	5.74	.42	.57	.72
	2200	1040	66.3	19.4	4.06	.42	.56	.70	64.0	18.8	4.56	.42	.57	.72	61.6	18.1	5.12	.43	.58	.73	59.1	17.3	5.75	.43	.59	.75
13ACC-060 — CR26-60N/W-F TXV and RFC COOLING CAPACITY																										
63°F (17°C)	1800	850	59.3	17.4	3.99	.71	.87	.99	57.2	16.8	4.50	.72	.89	1.00	55.0	16.1	5.06	.74	.91	1.00	52.8	15.5	5.68	.76	.93	1.00
	2000	945	60.3	17.7	4.01	.74	.90	1.00	58.2	17.1	4.51	.75	.92	1.00	56.0	16.4	5.07	.77	.94	1.00	53.8	15.8	5.69	.79	.96	1.00
	2200	1040	61.2	17.9	4.01	.77	.94	1.00	59.1	17.3	4.51	.78	.95	1.00	57.0	16.7	5.07	.80	.97	1.00	54.7	16.0	5.70	.82	.99	1.00
67°F (19°C)	1800	850	62.9	18.4	4.03	.56	.69	.83	60.7	17.8	4.53	.56	.70	.85	58.3	17.1	5.10	.57	.71	.87	55.9	16.4	5.72	.58	.73	.89
	2000	945	63.8	18.7	4.03	.57	.71	.87	61.5	18.0	4.54	.58	.73	.89	59.1	17.3	5.10	.58	.74	.91	56.6	16.6	5.72	.59	.76	.93
	2200	1040	64.5	18.9	4.04	.58	.74	.91	62.2	18.2	4.54	.59	.76	.92	59.8	17.5	5.10	.60	.77	.94	57.3	16.8	5.73	.61	.79	.96
71°F (22°C)	1800	850	67.1	19.7	4.07	.41	.54	.67	64.7	19.0	4.56	.41	.55	.68	62.2	18.2	5.13	.42	.55	.69	59.6	17.5	5.76	.42	.56	.71
	2000	945	67.9	19.9	4.07	.42	.56	.69	65.5	19.2	4.57	.42	.56	.70	63.0	18.5	5.14	.42	.57	.72	60.4	17.7	5.76	.43	.58	.74
	2200	1040	68.6	20.1	4.08	.42	.57	.72	66.2	19.4	4.58	.43	.58	.73	63.6	18.6	5.15	.43	.59	.75	60.9	17.8	5.77	.43	.60	.77
13ACC-060 — CR26-48N-F TXV with G60DFV-60C COOLING CAPACITY																										
63°F (17°C)	1830	865	57.9	17.0	3.99	.71	.86	.99	55.9	16.4	4.50	.72	.88	1.00	53.9	15.8	5.06	.73	.90	1.00	51.6	15.1	5.70	.75	.92	1.00
	2030	960	58.8	17.2	4.00	.73	.89	1.00	56.9	16.7	4.51	.74	.91	1.00	54.8	16.1	5.07	.76	.93	1.00	52.5	15.4	5.71	.78	.95	1.00
	2230	1055	59.7	17.5	4.01	.76	.93	1.00	57.7	16.9	4.52	.77	.94	1.00	55.6	16.3	5.09	.79	.96	1.00	53.3	15.6	5.72	.81	.98	1.00
67°F (19°C)	1830	865	61.6	18.1	4.03	.55	.68	.83	59.5	17.4	4.53	.56	.69	.84	57.2	16.8	5.09	.57	.71	.86	54.8	16.1	5.72	.57	.72	.88
	2030	960	62.4	18.3	4.03	.56	.71	.86	60.2	17.6	4.53	.57	.72	.88	57.9	17.0	5.10	.58	.73	.90	55.5	16.3	5.73	.59	.75	.92
	2230	1055	63.0	18.5	4.04	.58	.73	.89	60.8	17.8	4.54	.58	.75	.91	58.5	17.1	5.11	.59	.76	.93	56.0	16.4	5.74	.60	.78	.95
71°F (22°C)	1830	865	65.6	19.2	4.06	.41	.54	.66	63.3	18.6	4.57	.41	.54	.67	61.0	17.9	5.14	.42	.55	.68	58.5	17.1	5.76	.42	.56	.70
	2030	960	66.4	19.5	4.07	.41	.55	.68	64.1	18.8	4.57	.42	.56	.69	61.7	18.1	5.14	.42	.56	.71	59.1	17.3	5.77	.43	.58	.73
	2230	1055	67.1	19.7	4.08	.42	.56	.71	64.7	19.0	4.58	.42	.57	.72	62.3	18.3	5.14	.43	.58	.74	59.7	17.5	5.77	.43	.59	.76
13ACC-060 — CR26-48W-F TXV with G60DFV-60D-135 COOLING CAPACITY																										
63°F (17°C)	1880	885	58.4	17.1	4.00	.71	.87	.99	56.4	16.5	4.50	.72	.89	1.00	54.3	15.9	5.07	.74	.90	1.00	52.1	15.3	5.70	.75	.92	1.00
	2080	980	59.3	17.4	4.01	.74	.90	1.00	57.3	16.8	4.51	.75	.92	1.00	55.2	16.2	5.08	.76	.94	1.00	53.0	15.5	5.71	.78	.96	1.00
	2280	1075	60.1	17.6	4.01	.76	.93	1.00	58.1	17.0	4.52	.77	.95	1.00	56.0	16.4	5.09	.79	.96	1.00	53.8	15.8	5.71	.81	.98	1.00
67°F (19°C)	1880	885	62.0	18.2	4.03	.56	.69	.84	59.9	17.6	4.53	.56	.70	.85	57.6	16.9	5.09	.57	.71	.87	55.2	16.2	5.72	.58	.73	.89
	2080	980	62.8	18.4	4.03	.57	.71	.87	60.6	17.8	4.53	.58	.72	.89	58.3	17.1	5.10	.58	.74	.91	55.8	16.4	5.74	.59	.76	.93
	2280	1075	63.4	18.6	4.04	.58	.74	.90	61.2	17.9	4.54	.59	.75	.92	58.9	17.3	5.11	.60	.77	.94	56.4	16.5	5.74	.61	.79	.96
71°F (22°C)	1880	885	66.0	19.3	4.06	.41	.54	.67	63.8	18.7	4.57	.41	.55	.68	61.4	18.0	5.14	.42	.55	.69	58.9	17.3	5.76	.42	.56	.70
	2080	980	66.8	19.6	4.07	.42	.55	.69	64.5	18.9	4.57	.42	.56	.70	62.1	18.2	5.14	.42	.57	.72	59.5	17.4	5.77	.43	.58	.73
	2280	1075	67.5	19.8	4.08	.42	.57	.71	65.1	19.1	4.58	.42	.58	.73	62.7	18.4	5.14	.43	.58	.74	60.1	17.6	5.78	.43	.60	.76
13ACC-060 — CR26-60N-F TXV with G60DFV-60C COOLING CAPACITY																										
63°F (17°C)	1830	865	59.5	17.4	4.00	.72	.87	.99	57.4	16.8	4.51	.73	.89	1.00	55.3	16.2	5.07	.74	.91	1.00	53.0	15.5	5.69	.76	.93	1.00
	2030	960	60.5	17.7	4.02	.74	.91	1.00	58.4	17.1	4.52	.76	.93	1.00	56.2	16.5	5.08	.77	.95	1.00	54.0	15.8	5.70	.79	.97	1.00
	2230	1055	61.4	18.0	4.02	.77	.94	1.00	59.3	17.4	4.52	.79	.96	1.00	57.2	16.8	5.08	.80	.98	1.00	54.9	16.1	5.72	.82	.99	1.00
67°F (19°C)	1830	865	63.1	18.5	4.03	.56	.69	.84	60.9	17.8	4.54	.56	.70	.86	58.5	17.1	5.11	.57	.72	.88	56.1	16.4	5.73	.58	.73	.90
	2030	960	64.0	18.8	4.04	.57	.72	.88	61.7	18.1	4.55	.58	.73	.89	59.3	17.4	5.12	.59	.75	.91	56.8	16.6	5.74	.60	.77	.94
	2230	1055	64.7	19.0	4.05	.59	.75	.91	62.4	18.3	4.55	.59	.76	.93	60.0	17.6	5.11	.60	.78	.95	57.4	16.8	5.74	.61	.80	.97
71°F (22°C)	1830	865	67.3	19.7	4.07	.41	.54	.67	64.9	19.0	4.57	.42	.55	.68	62.4	18.3	5.15	.42	.56	.70	59.8	17.5	5.77	.42	.57	.71
	2030	960	68.1	20.0	4.08	.42	.56	.70	65.7	19.3	4.58	.42	.57	.71	63.1	18.5	5.15	.42	.58	.72	60.5	17.7	5.77	.43	.59	.74
	2230	1055	68.8	20.2	4.09	.42	.57	.72	66.3	19.4	4.59	.43	.58	.74	63.8	18.7	5.16	.43	.59	.76	61.1	17.9	5.78	.44	.60	.77

NOTE - For Temperatures and Capacities not shown in tables, see bulletin - Cooling Unit Rating Table Correction Factor Data in Miscellaneous Engineering Data section.

Entering Wet Bulb Temperature	Total Air Volume		Outdoor Air Temperature Entering Outdoor Coil																							
			85°F (29°C)						95°F (35°C)						105°F (41°C)						115°F (46°C)					
			Total Cooling Capacity		Comp Motor kW Input	Sensible To Total Ratio (S/T) Dry Bulb			Total Cooling Capacity		Comp Motor kW Input	Sensible To Total Ratio (S/T) Dry Bulb			Total Cooling Capacity		Comp Motor kW Input	Sensible To Total Ratio (S/T) Dry Bulb			Total Cooling Capacity		Comp Motor kW Input	Sensible To Total Ratio (S/T) Dry Bulb		
	cfm	L/s	kBtuh	kW		75°F 24°C	80°F 27°C	85°F 29°C	kBtuh	kW		75°F 24°C	80°F 27°C	85°F 29°C	kBtuh	kW		75°F 24°C	80°F 27°C	85°F 29°C	kBtuh	kW		75°F 24°C	80°F 27°C	85°F 29°C
13ACC-060 — CR26-60W-F TXV with G60DFV-60D-135 COOLING CAPACITY																										
63°F (17°C)	1880	885	59.9	17.6	4.01	.72	.88	1.00	57.9	17.0	4.51	.74	.90	1.00	55.7	16.3	5.07	.75	.92	1.00	53.4	15.6	5.70	.77	.94	1.00
	2080	980	60.9	17.8	4.02	.75	.92	1.00	58.8	17.2	4.52	.76	.94	1.00	56.6	16.6	5.08	.78	.95	1.00	54.4	15.9	5.70	.80	.97	1.00
	2280	1075	61.8	18.1	4.03	.77	.95	1.00	59.7	17.5	4.52	.79	.96	1.00	57.6	16.9	5.09	.81	.98	1.00	55.3	16.2	5.72	.83	1.00	1.00
67°F (19°C)	1880	885	63.5	18.6	4.04	.56	.70	.85	61.3	18.0	4.54	.57	.71	.87	58.9	17.3	5.11	.58	.73	.89	56.5	16.6	5.73	.58	.74	.91
	2080	980	64.4	18.9	4.05	.57	.72	.88	62.1	18.2	4.55	.58	.74	.90	59.6	17.5	5.12	.59	.76	.92	57.1	16.7	5.74	.60	.77	.94
	2280	1075	65.0	19.0	4.06	.59	.75	.92	62.7	18.4	4.56	.60	.77	.94	60.3	17.7	5.12	.61	.78	.96	57.7	16.9	5.74	.62	.81	.98
71°F (22°C)	1880	885	67.7	19.8	4.07	.41	.55	.68	65.3	19.1	4.58	.42	.55	.69	62.8	18.4	5.15	.42	.56	.70	60.1	17.6	5.78	.42	.57	.72
	2080	980	68.5	20.1	4.08	.42	.56	.70	66.0	19.3	4.59	.42	.57	.72	63.5	18.6	5.15	.43	.58	.73	60.8	17.8	5.77	.43	.59	.75
	2280	1075	69.2	20.3	4.09	.42	.58	.73	66.7	19.5	4.59	.43	.59	.74	64.1	18.8	5.16	.43	.60	.76	61.4	18.0	5.78	.44	.61	.78
13ACC-060 — CH23-65 TXV and RFC COOLING CAPACITY																										
63°F (17°C)	1800	850	58.3	17.1	3.99	.71	.87	.99	56.3	16.5	4.49	.72	.89	1.00	54.2	15.9	5.06	.74	.90	1.00	52.0	15.2	5.69	.75	.92	1.00
	2000	945	59.3	17.4	4.00	.74	.90	1.00	57.3	16.8	4.51	.75	.92	1.00	55.2	16.2	5.08	.77	.94	1.00	52.9	15.5	5.71	.79	.96	1.00
	2200	1040	60.2	17.6	4.01	.76	.93	1.00	58.2	17.1	4.51	.78	.95	1.00	56.1	16.4	5.08	.80	.96	1.00	53.9	15.8	5.71	.82	.98	1.00
67°F (19°C)	1800	850	61.8	18.1	4.02	.55	.69	.83	59.7	17.5	4.52	.56	.70	.85	57.4	16.8	5.09	.57	.71	.87	55.1	16.1	5.72	.58	.73	.89
	2000	945	62.7	18.4	4.03	.57	.71	.87	60.5	17.7	4.53	.58	.73	.89	58.2	17.1	5.10	.58	.74	.91	55.7	16.3	5.73	.59	.76	.93
	2200	1040	63.4	18.6	4.03	.58	.74	.90	61.2	17.9	4.54	.59	.75	.92	58.8	17.2	5.10	.60	.77	.94	56.4	16.5	5.74	.61	.79	.96
71°F (22°C)	1800	850	65.9	19.3	4.06	.41	.54	.67	63.6	18.6	4.56	.42	.55	.68	61.2	17.9	5.12	.42	.55	.69	58.7	17.2	5.75	.42	.56	.70
	2000	945	66.7	19.5	4.07	.42	.55	.69	64.4	18.9	4.57	.42	.56	.70	62.0	18.2	5.13	.42	.57	.72	59.4	17.4	5.76	.43	.58	.73
	2200	1040	67.4	19.8	4.07	.42	.57	.72	65.0	19.0	4.58	.42	.58	.73	62.6	18.3	5.14	.43	.59	.75	60.0	17.6	5.78	.43	.60	.77
13ACC-060 — CH33-48C-2F TXV and RFC COOLING CAPACITY																										
63°F (17°C)	1800	850	60.1	17.6	4.02	.71	.86	.99	58.1	17.0	4.52	.72	.88	.99	55.9	16.4	5.09	.73	.90	1.00	53.6	15.7	5.73	.75	.92	1.00
	2000	945	61.2	17.9	4.03	.73	.90	1.00	59.1	17.3	4.53	.74	.91	1.00	56.9	16.7	5.11	.76	.93	1.00	54.6	16.0	5.75	.78	.95	1.00
	2200	1040	62.1	18.2	4.04	.76	.93	1.00	60.0	17.6	4.54	.77	.94	1.00	57.8	16.9	5.12	.79	.96	1.00	55.5	16.3	5.75	.81	.98	1.00
67°F (19°C)	1800	850	63.9	18.7	4.05	.55	.68	.83	61.7	18.1	4.55	.56	.70	.84	59.4	17.4	5.12	.56	.71	.86	56.9	16.7	5.76	.57	.72	.88
	2000	945	64.8	19.0	4.06	.56	.71	.86	62.5	18.3	4.56	.57	.72	.88	60.2	17.6	5.13	.58	.73	.90	57.6	16.9	5.77	.59	.75	.92
	2200	1040	65.5	19.2	4.06	.58	.73	.90	63.2	18.5	4.57	.59	.75	.91	60.8	17.8	5.14	.60	.76	.93	58.3	17.1	5.78	.61	.78	.95
71°F (22°C)	1800	850	68.1	20.0	4.09	.41	.54	.66	65.8	19.3	4.59	.41	.54	.67	63.3	18.6	5.16	.42	.55	.68	60.7	17.8	5.80	.42	.56	.70
	2000	945	69.0	20.2	4.10	.42	.55	.68	66.6	19.5	4.60	.42	.56	.70	64.1	18.8	5.17	.42	.57	.71	61.4	18.0	5.80	.43	.58	.73
	2200	1040	69.7	20.4	4.10	.42	.56	.71	67.3	19.7	4.61	.42	.57	.72	64.7	19.0	5.18	.43	.58	.74	62.0	18.2	5.82	.43	.59	.76
13ACC-060 — CH33-60D-2F TXV and RFC COOLING CAPACITY																										
63°F (17°C)	1800	850	60.1	17.6	4.02	.71	.86	.99	58.0	17.0	4.52	.72	.88	1.00	55.8	16.4	5.09	.73	.90	1.00	53.5	15.7	5.72	.75	.92	1.00
	2000	945	61.1	17.9	4.03	.73	.90	1.00	59.0	17.3	4.53	.75	.91	1.00	56.8	16.6	5.10	.76	.93	1.00	54.5	16.0	5.72	.78	.95	1.00
	2200	1040	62.1	18.2	4.03	.76	.93	1.00	60.0	17.6	4.54	.77	.94	1.00	57.8	16.9	5.10	.79	.96	1.00	55.5	16.3	5.74	.81	.98	1.00
67°F (19°C)	1800	850	63.9	18.7	4.05	.55	.68	.83	61.7	18.1	4.55	.56	.69	.84	59.3	17.4	5.12	.56	.71	.86	56.8	16.6	5.76	.57	.72	.88
	2000	945	64.8	19.0	4.06	.56	.71	.86	62.5	18.3	4.56	.57	.72	.88	60.1	17.6	5.13	.58	.73	.90	57.6	16.9	5.76	.59	.75	.92
	2200	1040	65.5	19.2	4.06	.58	.73	.89	63.2	18.5	4.57	.59	.75	.91	60.8	17.8	5.14	.59	.76	.93	58.2	17.1	5.77	.60	.78	.95
71°F (22°C)	1800	850	68.1	20.0	4.09	.41	.54	.66	65.7	19.3	4.59	.41	.54	.67	63.3	18.6	5.16	.42	.55	.68	60.7	17.8	5.79	.42	.56	.70
	2000	945	69.0	20.2	4.09	.42	.55	.68	66.6	19.5	4.60	.42	.56	.70	64.0	18.8	5.17	.42	.57	.71	61.4	18.0	5.80	.42	.58	.73
	2200	1040	69.8	20.5	4.10	.42	.56	.71	67.3	19.7	4.60	.42	.57	.72	64.7	19.0	5.18	.43	.58	.74	62.0	18.2	5.81	.43	.59	.76
13ACC-060 — CH33-50/60C-2F TXV and RFC COOLING CAPACITY																										
63°F (17°C)	1800	850	60.5	17.7	4.03	.71	.86	.98	58.4	17.1	4.53	.72	.88	1.00	56.2	16.5	5.10	.73	.90	1.00	53.9	15.8	5.72	.75	.91	1.00
	2000	945	61.6	18.1	4.04	.73	.89	1.00	59.5	17.4	4.54	.75	.91	1.00	57.2	16.8	5.10	.76	.93	1.00	54.9	16.1	5.74	.78	.95	1.00
	2200	1040	62.5	18.3	4.05	.76	.93	1.00	60.4	17.7	4.55	.77	.94	1.00	58.1	17.0	5.11	.79	.96	1.00	55.8	16.4	5.75	.81	.98	1.00
67°F (19°C)	1800	850	64.4	18.9	4.06	.55	.68	.82	62.1	18.2	4.56	.56	.69	.84	59.7	17.5	5.14	.56	.71	.86	57.2	16.8	5.77	.57	.72	.88
	2000	945	65.3	19.1	4.07	.56	.71	.86	63.0	18.5	4.57	.57	.72	.88	60.6	17.8	5.14	.58	.73	.90	58.0	17.0	5.77	.59	.75	.92
	2200	1040	66.1	19.4	4.07	.58	.73	.90	63.7	18.7	4.58	.59	.75	.91	61.2	17.9	5.15	.59	.76	.93	58.7	17.2	5.78	.60	.78	.95
71°F (22°C)	1800	850	68.7	20.1	4.10	.41	.53	.66	66.3	19.4	4.60	.41	.54	.67	63.8	18.7	5.17	.42	.55	.68	61.1	17.9	5.81	.42	.56	.70
	2000	945	69.6	20.4	4.10	.42	.55	.68	67.1	19.7	4.61	.42	.56	.70	64.5	18.9	5.18	.42	.57	.71	61.8	18.1	5.82	.42	.58	.73
	2200	1040	70.4	20.6	4.11	.42	.56	.71	67.9	19.9	4.62	.42	.57	.72	65.2	19.1	5.19	.43	.58	.74	62.5	18.3	5.82	.43	.59	.76
13ACC-060 — CH33-62D-2F TXV and RFC COOLING CAPACITY																										
63°F (17°C)	1800	850	60.5	17.7	4.02	.71	.86	.99	58.4	17.1	4.52	.72	.87	1.00	56.2	16.5	5.08	.73	.89	1.00	53.8	15.8	5.71	.75	.92	1.00
	2000	945	61.5	18.0	4.03	.73	.90	1.00	59.4	17.4	4.53	.74	.91	1.00	57.2	16.8	5.09	.76	.93	1.00	54.8	16.1	5.72	.78	.95	1.00
	2200	1040	62.5	18.3	4.04	.76	.93	1.00	60.4	17.7	4.54	.77	.94	1.00	58.1	17.0	5.11	.79	.96	1.00	55.7	16.3	5.74	.81	.98	1.00
67°F (19°C)	1800	850	64.4	18.9	4.05	.55	.68	.82	62.1	18.2	4.55	.56	.69	.84	59.7	17.5	5.12	.56	.71	.86	57.2	16.8	5.75	.57	.72	.88
	2000	945	65.3	19.1	4.06	.56	.71	.86	63.0	18.5	4.57	.57	.72	.88	60.5	17.7	5.13	.58	.73	.90	58.0	17.0	5.76	.59	.75	.92
	2200	1040	66.1	19.4	4.07	.58	.73	.90	63.7	18.7	4.57	.58	.75	.91	61.3	18.0	5.14	.59	.76	.93	58.6	17.2	5.77	.60	.78	.95
71°F (22°C)	1800	850	68.7	20.1	4.09	.41	.53	.66	66.3	19.4	4.59	.41	.54	.67	63.7	18.7	5.17	.42	.55	.68	61.1	17.9	5.79	.42	.56	.70
	2000	945	69.6	20.4	4.10	.42	.55	.68	67.1	19.7	4.61	.42	.56	.70	64.5	18.9	5.17	.42	.57	.71	61.8	18.1	5.80	.42	.57	.73
	2200	1040	70.4	20.6	4.11	.42	.56	.71	67.9	19.9	4.61	.42	.57	.72	65.2	19.1	5.18	.43	.58	.74	62.5	18.3	5.81	.43	.59	.76
13ACC-060 — CH23-68 TXV and RFC COOLING CAPACITY																										
63°F (17°C)	1800	850	61.2	17.9	4.04	.72	.88	1.00	59.1	17.3	4.54	.73	.89	1.00	56.8	16.6	5.11	.74	.91	1.00	54.4	15.9	5.74	.76	.94	1.00
	2000	945	62.4	18.3	4.05	.75	.91	1.00	60.1	17.6	4.55	.76	.93	1.00	57.8	16.9	5.12	.78	.95	1.00	55.4	16.2	5.75	.80	.97	1.00
	2200	1040	63.4	18.6	4.06	.77	.95	1.00	61.2	17.9	4.56	.79	.97	1.00	58.9	17.3	5.13	.81	.98	1.00	56.5	16.6	5.76	.83	1.00	1.00
67°F (19°C)	1800	850	64.9	19.0	4.07	.56	.70	.84	62.6	18.3	4.58	.56	.71	.86	60.1	17.6	5.14	.57	.72	.88	57.6	16.9	5.78	.58	.74	.90
	2000	945	65.9	19.3	4.08	.57	.72	.88	63.5	18.6	4.58	.58	.73	.90	61.0	17.9	5.16	.59	.75	.92	58.4	17.1	5.79	.60	.77	.94
	2200	1040	66.7	19.5	4.09	.59	.75	.92	64.3	18.8	4.60	.60	.77	.94	61.7	18.1	5.17	.61	.78	.96	59.0	17.3	5.80	.62	.81	.98
71°F (22°C)	1800	850	69.2	20.3	4.11	.41	.54	.67	66.7	19.5	4.61	.42	.55	.68	64.1	18.8	5.18	.42	.56	.70	61.4	18.0	5.81	.42	.57	.71
	2000	945	70.2	20.6	4.12	.42	.56	.70	67.6	19.8	4.62	.42	.57	.71	64.9	19.0	5.20	.43	.58	.73	62.1	18.2	5.83	.43	.59	.75
	2200	1040	70.9	20.8	4.13	.43	.58	.73	68.3	20.0	4.63	.43	.59	.74	65.6	19.2	5.20	.43	.60	.76	62.8	18.4	5.83	.44	.61	.78

NOTE - For Temperatures and Capacities not shown in tables, see bulletin - Cooling Unit Rating Table Correction Factor Data in Miscellaneous Engineering Data section.

Entering Wet Bulb Temperature	Total Air Volume		Outdoor Air Temperature Entering Outdoor Coil																							
			85°F (29°C)						95°F (35°C)						105°F (41°C)						115°F (46°C)					
			Total Cooling Capacity		Comp Motor kW Input	Sensible To Total Ratio (S/T) Dry Bulb			Total Cooling Capacity		Comp Motor kW Input	Sensible To Total Ratio (S/T) Dry Bulb			Total Cooling Capacity		Comp Motor kW Input	Sensible To Total Ratio (S/T) Dry Bulb			Total Cooling Capacity		Comp Motor kW Input	Sensible To Total Ratio (S/T) Dry Bulb		
	cfm	L/s	kBtuh	kW		75°F 24°C	80°F 27°C	85°F 29°C	kBtuh	kW		75°F 24°C	80°F 27°C	85°F 29°C	kBtuh	kW		75°F 24°C	80°F 27°C	85°F 29°C	kBtuh	kW		75°F 24°C	80°F 27°C	85°F 29°C
13ACC-060 — CH23-65 TXV with G60UHV-60C/D COOLING CAPACITY																										
63°F (17°C)	1565	740	56.5	16.6	3.97	.69	.83	.95	54.6	16.0	4.47	.69	.84	.97	52.6	15.4	5.03	.71	.86	.98	50.4	14.8	5.66	.72	.88	1.00
	1765	835	57.6	16.9	3.98	.71	.86	.99	55.7	16.3	4.48	.72	.88	1.00	53.6	15.7	5.04	.74	.90	1.00	51.4	15.1	5.68	.75	.92	1.00
	1965	925	58.7	17.2	3.99	.74	.90	1.00	56.7	16.6	4.49	.75	.91	1.00	54.6	16.0	5.06	.76	.93	1.00	52.4	15.4	5.68	.78	.95	1.00
67°F (19°C)	1565	740	60.2	17.6	4.00	.54	.66	.79	58.1	17.0	4.50	.54	.67	.81	55.9	16.4	5.06	.55	.68	.82	53.6	15.7	5.69	.56	.69	.84
	1765	835	61.2	17.9	4.01	.55	.69	.83	59.1	17.3	4.51	.56	.70	.85	56.9	16.7	5.07	.57	.71	.86	54.5	16.0	5.70	.57	.73	.88
	1965	925	62.0	18.2	4.02	.57	.71	.86	59.9	17.6	4.51	.57	.72	.88	57.6	16.9	5.08	.58	.74	.90	55.2	16.2	5.71	.59	.76	.92
71°F (22°C)	1565	740	64.1	18.8	4.04	.41	.52	.64	62.0	18.2	4.54	.41	.53	.65	59.7	17.5	5.10	.41	.53	.66	57.3	16.8	5.73	.41	.54	.67
	1765	835	65.2	19.1	4.05	.41	.54	.66	63.0	18.5	4.55	.41	.54	.67	60.6	17.8	5.11	.42	.55	.68	58.1	17.0	5.74	.42	.56	.70
	1965	925	66.0	19.3	4.05	.42	.55	.69	63.8	18.7	4.56	.42	.56	.70	61.4	18.0	5.12	.42	.57	.71	58.8	17.2	5.74	.43	.58	.73
13ACC-060 — CH33-48C-2F TXV with G60UHV-60C COOLING CAPACITY																										
63°F (17°C)	1565	740	57.8	16.9	3.99	.68	.82	.95	55.9	16.4	4.50	.69	.84	.97	53.8	15.8	5.07	.70	.85	.98	51.6	15.1	5.70	.72	.87	.99
	1765	835	59.0	17.3	4.01	.71	.86	.98	57.0	16.7	4.51	.72	.87	.99	54.9	16.1	5.08	.73	.89	1.00	52.6	15.4	5.71	.75	.91	1.00
	1965	925	60.1	17.6	4.02	.73	.89	1.00	58.0	17.0	4.52	.74	.91	1.00	55.9	16.4	5.09	.76	.92	1.00	53.6	15.7	5.72	.78	.95	1.00
67°F (19°C)	1565	740	61.7	18.1	4.03	.54	.66	.79	59.6	17.5	4.53	.54	.67	.80	57.4	16.8	5.10	.55	.68	.82	55.0	16.1	5.73	.56	.69	.84
	1765	835	62.8	18.4	4.04	.55	.68	.82	60.6	17.8	4.54	.56	.69	.84	58.3	17.1	5.11	.56	.70	.86	55.9	16.4	5.74	.57	.72	.88
	1965	925	63.7	18.7	4.05	.56	.71	.86	61.5	18.0	4.55	.57	.72	.87	59.1	17.3	5.12	.58	.73	.89	56.6	16.6	5.75	.59	.75	.91
71°F (22°C)	1565	740	65.8	19.3	4.06	.41	.52	.63	63.6	18.6	4.57	.41	.52	.64	61.2	17.9	5.13	.41	.53	.65	58.7	17.2	5.77	.41	.54	.66
	1765	835	66.9	19.6	4.07	.41	.53	.66	64.6	18.9	4.58	.41	.54	.67	62.2	18.2	5.14	.42	.55	.68	59.7	17.5	5.78	.42	.55	.69
	1965	925	67.8	19.9	4.08	.41	.55	.68	65.5	19.2	4.59	.42	.55	.69	63.0	18.5	5.15	.42	.56	.71	60.4	17.7	5.79	.42	.57	.73
13ACC-060 — CH33-60D-2F TXV with G60UHV-60D-135 COOLING CAPACITY																										
63°F (17°C)	1565	740	58.3	17.1	3.99	.68	.82	.95	56.3	16.5	4.50	.69	.84	.96	54.2	15.9	5.06	.70	.85	.98	51.9	15.2	5.70	.71	.87	.99
	1765	835	59.5	17.4	4.01	.70	.86	.98	57.5	16.9	4.51	.71	.87	.99	55.3	16.2	5.08	.73	.89	1.00	53.0	15.5	5.71	.75	.91	1.00
	1965	925	60.5	17.7	4.02	.73	.89	1.00	58.5	17.1	4.52	.74	.91	1.00	56.3	16.5	5.09	.76	.93	1.00	54.0	15.8	5.71	.77	.95	1.00
67°F (19°C)	1565	740	62.2	18.2	4.03	.54	.66	.78	60.1	17.6	4.53	.54	.66	.80	57.8	16.9	5.10	.55	.68	.81	55.4	16.2	5.73	.55	.69	.83
	1765	835	63.3	18.6	4.04	.55	.68	.82	61.1	17.9	4.54	.55	.69	.84	58.8	17.2	5.11	.56	.70	.86	56.3	16.5	5.74	.57	.72	.88
	1965	925	64.2	18.8	4.05	.56	.70	.86	62.0	18.2	4.55	.57	.72	.87	59.6	17.5	5.12	.58	.73	.89	57.1	16.7	5.75	.59	.75	.92
71°F (22°C)	1565	740	66.3	19.4	4.07	.41	.52	.63	64.1	18.8	4.57	.41	.52	.64	61.7	18.1	5.14	.41	.53	.65	59.2	17.3	5.77	.41	.54	.66
	1765	835	67.5	19.8	4.08	.41	.53	.65	65.1	19.1	4.58	.41	.54	.67	62.7	18.4	5.15	.41	.55	.68	60.1	17.6	5.78	.42	.55	.69
	1965	925	68.4	20.0	4.09	.42	.55	.68	66.0	19.3	4.59	.42	.55	.69	63.5	18.6	5.15	.42	.56	.71	60.8	17.8	5.79	.42	.57	.73
13ACC-060 — CH33-50/60C-2F TXV with G60UHV-60C COOLING CAPACITY																										
63°F (17°C)	1565	740	58.7	17.2	3.99	.68	.82	.95	56.7	16.6	4.49	.69	.84	.96	54.6	16.0	5.06	.70	.85	.98	52.3	15.3	5.69	.71	.87	.99
	1765	835	60.0	17.6	4.00	.70	.86	.98	57.9	17.0	4.51	.71	.87	.99	55.7	16.3	5.07	.73	.89	1.00	53.4	15.6	5.70	.74	.91	1.00
	1965	925	61.0	17.9	4.01	.73	.89	1.00	58.9	17.3	4.52	.74	.91	1.00	56.8	16.6	5.08	.76	.92	1.00	54.4	15.9	5.71	.77	.95	1.00
67°F (19°C)	1565	740	62.7	18.4	4.03	.54	.66	.78	60.5	17.7	4.53	.54	.66	.80	58.2	17.1	5.09	.55	.67	.81	55.8	16.4	5.73	.55	.69	.83
	1765	835	63.9	18.7	4.04	.55	.68	.82	61.6	18.1	4.54	.55	.69	.83	59.2	17.3	5.11	.56	.70	.85	56.7	16.6	5.74	.57	.72	.88
	1965	925	64.8	19.0	4.05	.56	.70	.86	62.5	18.3	4.55	.57	.72	.87	60.1	17.6	5.12	.58	.73	.89	57.5	16.9	5.74	.59	.75	.91
71°F (22°C)	1565	740	66.9	19.6	4.06	.41	.52	.63	64.6	18.9	4.57	.41	.52	.64	62.2	18.2	5.13	.41	.53	.65	59.6	17.5	5.77	.41	.54	.66
	1765	835	68.1	20.0	4.08	.41	.53	.65	65.7	19.3	4.58	.41	.54	.66	63.2	18.5	5.14	.41	.55	.68	60.5	17.7	5.78	.42	.56	.69
	1965	925	69.0	20.2	4.08	.41	.55	.68	66.6	19.5	4.59	.42	.55	.69	64.0	18.8	5.16	.42	.56	.71	61.4	18.0	5.79	.42	.57	.72
13ACC-060 — CH33-62D-2F TXV with G60UHV-60D-135 COOLING CAPACITY																										
63°F (17°C)	1565	740	58.7	17.2	3.99	.68	.82	.95	56.7	16.6	4.49	.69	.83	.96	54.5	16.0	5.06	.70	.85	.98	52.2	15.3	5.69	.72	.87	1.00
	1765	835	60.0	17.6	4.00	.70	.86	.98	57.9	17.0	4.51	.71	.87	.99	55.7	16.3	5.07	.73	.89	1.00	53.3	15.6	5.70	.74	.91	1.00
	1965	925	61.1	17.9	4.02	.73	.89	1.00	58.9	17.3	4.52	.74	.91	1.00	56.7	16.6	5.08	.76	.93	1.00	54.3	15.9	5.70	.77	.95	1.00
67°F (19°C)	1565	740	62.7	18.4	4.03	.54	.66	.78	60.5	17.7	4.53	.54	.66	.80	58.2	17.1	5.09	.55	.67	.81	55.7	16.3	5.72	.55	.69	.83
	1765	835	63.9	18.7	4.04	.55	.68	.82	61.6	18.1	4.54	.55	.69	.83	59.2	17.3	5.11	.56	.70	.85	56.7	16.6	5.73	.57	.72	.88
	1965	925	64.9	19.0	4.05	.56	.70	.86	62.5	18.3	4.55	.57	.72	.87	60.1	17.6	5.12	.58	.73	.89	57.5	16.9	5.74	.59	.75	.91
71°F (22°C)	1565	740	67.0	19.6	4.06	.41	.52	.63	64.6	18.9	4.57	.41	.52	.64	62.2	18.2	5.13	.41	.53	.65	59.6	17.5	5.77	.41	.54	.66
	1765	835	68.2	20.0	4.08	.41	.53	.65	65.8	19.3	4.58	.41	.54	.66	63.2	18.5	5.15	.41	.55	.68	60.6	17.8	5.78	.42	.55	.69
	1965	925	69.1	20.3	4.08	.42	.55	.68	66.7	19.5	4.59	.42	.55	.69	64.1	18.8	5.16	.42	.56	.71	61.4	18.0	5.78	.42	.57	.72
13ACC-060 — CH23-68 TXV with G60UHV-60C/D COOLING CAPACITY																										
63°F (17°C)	1565	740	59.3	17.4	4.01	.69	.83	.96	57.3	16.8	4.51	.70	.85	.98	55.1	16.1	5.07	.71	.86	.99	52.7	15.4	5.70	.72	.89	1.00
	1765	835	60.7	17.8	4.02	.71	.87	1.00	58.6	17.2	4.52	.73	.89	1.00	56.3	16.5	5.09	.74	.91	1.00	53.9	15.8	5.72	.76	.93	1.00
	1965	925	61.9	18.1	4.03	.74	.91	1.00	59.7	17.5	4.53	.76	.93	1.00	57.4	16.8	5.10	.78	.95	1.00	55.0	16.1	5.73	.79	.97	1.00
67°F (19°C)	1565	740	63.2	18.5	4.04	.54	.66	.79	61.0	17.9	4.55	.55	.67	.81	58.6	17.2	5.11	.55	.68	.83	56.1	16.4	5.73	.56	.70	.85
	1765	835	64.4	18.9	4.06	.55	.69	.83	62.1	18.2	4.55	.56	.70	.85	59.7	17.5	5.12	.57	.72	.87	57.1	16.7	5.75	.58	.73	.89
	1965	925	65.4	19.2	4.07	.57	.72	.87	63.0	18.5	4.57	.58	.73	.89	60.5	17.7	5.14	.59	.75	.91	57.9	17.0	5.76	.60	.77	.94
71°F (22°C)	1565	740	67.5	19.8	4.08	.41	.52	.64	65.1	19.1	4.59	.41	.53	.65	62.6	18.3	5.15	.41	.54	.66	60.0	17.6	5.78	.41	.54	.67
	1765	835	68.7	20.1	4.10	.41	.54	.67	66.2	19.4	4.60	.41	.55	.68	63.6	18.6	5.16	.42	.56	.69	60.9	17.8	5.79	.42	.56	.71
	1965	925	69.7	20.4	4.10	.42	.56	.69	67.1	19.7	4.60	.42	.57	.71	64.5	18.9	5.17	.42	.57	.72	61.7	18.1	5.80	.43	.58	.74
13ACC-060 — CB28UH-048 - CB29M-51 TXV COOLING CAPACITY																										
63°F (17°C)	1750	825	56.5	16.6	3890	.74	.88	.99	54.7	16.0	4390	.75	.90	1.00	52.7	15.4	4960	.77	.91	1.00	50.5	14.8	5600	.78	.93	1.00
	1800	850	56.7	16.6	3890	.75	.89	.99	54.9	16.1	4390	.76	.91	1.00	52.9	15.5	4960	.77	.92	1.00	50.8	14.9	5600	.79	.94	1.00
	1850	875	57.0	16.7	3890	.75	.90	1.00	55.1	16.1	4400	.77	.91	1.00	53.1	15.6	4970	.78	.93	1.00	51.0	14.9	5600	.80	.95	1.00
67°F (19°C)	1750	825	59.9	17.6	3920	.58	.72	.85	57.9	17.0	4420	.58	.73	.87	55.8	16.4	4990	.59	.74	.88	53.5	15.7	5630	.60	.76	.90
	1800	850	60.1	17.6	3920	.58	.72	.86	58.1	17.0	4430	.59	.74	.88	56.0	16.4	5000	.60	.75	.89	53.7	15.7	5630	.60	.76	.91
	1850	875	60.3	17.7	3920	.59	.73	.87	58.3	17.1	4430	.59	.74	.88	56.2	16.5	5000	.60	.76	.90	53.8	15.8	5630	.61	.77	.92
71°F (22°C)	1750	825	63.8	18.7	3960	.43	.56	.69	61.7	18.1	4460	.43	.57	.70	59.4	17.4	5030	.43	.58	.72	57.0	16.7	5660	.44	.59	.73
	1800	850	64.0	18.8	3960	.43	.57	.70	61.9	18.1	4460	.43	.57	.71	59.6	17.5	5030	.44	.58	.73	57.2	16.8	5670	.44	.59	.74
	1850	875	64.2	18.8	3960	.43	.57	.71	62.1	18.2	4460	.43	.58	.72	59.8	17.5	5030	.44	.59	.73	57.4	16.8	5670	.44	.59	.75

RATINGS

NOTE - For Temperatures and Capacities not shown in tables, see bulletin - Cooling Unit Rating Table Correction Factor Data in Miscellaneous Engineering Data section.

Entering Wet Bulb Temperature	Total Air Volume		Outdoor Air Temperature Entering Outdoor Coil																							
			85°F (29°C)						95°F (35°C)						105°F (41°C)						115°F (46°C)					
			Total Cooling Capacity		Comp Motor kW Input	Sensible To Total Ratio (S/T) Dry Bulb			Total Cooling Capacity		Comp Motor kW Input	Sensible To Total Ratio (S/T) Dry Bulb			Total Cooling Capacity		Comp Motor kW Input	Sensible To Total Ratio (S/T) Dry Bulb			Total Cooling Capacity		Comp Motor kW Input	Sensible To Total Ratio (S/T) Dry Bulb		
	cfm	L/s	kBtuh	kW		75°F 24°C	80°F 27°C	85°F 29°C	kBtuh	kW		75°F 24°C	80°F 27°C	85°F 29°C	kBtuh	kW		75°F 24°C	80°F 27°C	85°F 29°C	kBtuh	kW		75°F 24°C	80°F 27°C	85°F 29°C
13ACC-060 — CB28UH-060 - CB29M-65 TXV COOLING CAPACITY																										
63°F (17°C)	1600	755	55.5	16.3	3870	.72	.86	.97	53.7	15.7	4370	.73	.87	.98	51.7	15.2	4940	.75	.89	.99	49.6	14.5	5570	.76	.91	1.00
	1800	850	56.5	16.6	3880	.75	.89	.99	54.7	16.0	4380	.76	.91	1.00	52.7	15.4	4950	.77	.92	1.00	50.6	14.8	5580	.79	.94	1.00
	2000	945	57.5	16.9	3890	.77	.92	1.00	55.6	16.3	4390	.79	.94	1.00	53.6	15.7	4960	.80	.95	1.00	51.5	15.1	5590	.82	.97	1.00
67°F (19°C)	1600	755	58.9	17.3	3900	.57	.70	.83	57.0	16.7	4400	.57	.71	.84	54.9	16.1	4970	.58	.72	.86	52.7	15.4	5600	.59	.73	.87
	1800	850	59.9	17.6	3910	.58	.72	.86	57.9	17.0	4410	.59	.74	.88	55.8	16.4	4980	.60	.75	.89	53.4	15.6	5610	.60	.76	.91
	2000	945	60.7	17.8	3920	.60	.75	.89	58.6	17.2	4420	.60	.76	.91	56.5	16.6	4990	.61	.78	.92	54.1	15.9	5620	.62	.79	.94
71°F (22°C)	1600	755	62.8	18.4	3940	.43	.55	.67	60.7	17.8	4440	.43	.56	.68	58.5	17.1	5010	.43	.56	.70	56.2	16.5	5640	.43	.57	.71
	1800	850	63.7	18.7	3950	.43	.57	.70	61.7	18.1	4450	.43	.57	.71	59.4	17.4	5020	.44	.58	.73	57.0	16.7	5650	.44	.59	.74
	2000	945	64.5	18.9	3960	.44	.58	.73	62.4	18.3	4460	.44	.59	.74	60.1	17.6	5020	.44	.60	.75	57.6	16.9	5660	.45	.61	.77
13ACC-060 — CB30M-51 - CB30U-51 TXV COOLING CAPACITY																										
63°F (17°C)	1400	660	54.1	15.9	3860	.70	.82	.93	52.3	15.3	4350	.70	.83	.95	50.4	14.8	4920	.71	.85	.96	48.3	14.2	5540	.73	.86	.98
	1600	755	55.5	16.3	3870	.72	.86	.97	53.6	15.7	4370	.73	.87	.98	51.7	15.2	4930	.74	.88	1.00	49.5	14.5	5560	.76	.90	1.00
	1800	850	56.7	16.6	3880	.75	.89	1.00	54.7	16.0	4380	.76	.90	1.00	52.7	15.4	4940	.77	.92	1.00	50.5	14.8	5570	.79	.94	1.00
67°F (19°C)	1400	660	57.8	16.9	3890	.55	.67	.79	55.9	16.4	4390	.56	.68	.80	53.8	15.8	4950	.56	.69	.81	51.6	15.1	5580	.57	.70	.83
	1600	755	59.1	17.3	3910	.57	.69	.82	57.1	16.7	4400	.57	.70	.83	54.9	16.1	4970	.58	.72	.85	52.6	15.4	5590	.58	.73	.87
	1800	850	60.1	17.6	3910	.58	.72	.86	58.1	17.0	4410	.59	.73	.87	55.9	16.4	4980	.59	.75	.89	53.5	15.7	5600	.60	.76	.91
71°F (22°C)	1400	660	61.8	18.1	3930	.42	.53	.64	59.7	17.5	4430	.42	.54	.65	57.5	16.9	4990	.42	.54	.66	55.2	16.2	5620	.43	.55	.67
	1600	755	63.0	18.5	3950	.43	.55	.67	61.0	17.9	4440	.43	.55	.68	58.7	17.2	5000	.43	.56	.69	56.2	16.5	5630	.43	.57	.70
	1800	850	64.1	18.8	3950	.43	.56	.70	61.9	18.1	4450	.43	.57	.71	59.6	17.5	5010	.43	.58	.72	57.1	16.7	5640	.44	.59	.74
13ACC-060 — CB31MV-51 TXV COOLING CAPACITY																										
63°F (17°C)	1425	670	54.2	15.9	3860	.70	.83	.94	52.4	15.4	4350	.71	.84	.96	50.4	14.8	4910	.72	.86	.97	48.3	14.2	5540	.73	.87	.99
	1625	765	55.4	16.2	3870	.72	.86	.98	53.5	15.7	4370	.73	.87	.99	51.5	15.1	4920	.75	.89	1.00	49.3	14.4	5550	.76	.91	1.00
	1805	850	56.4	16.5	3880	.75	.89	1.00	54.5	16.0	4370	.76	.90	1.00	52.4	15.4	4940	.77	.92	1.00	50.2	14.7	5560	.79	.94	1.00
67°F (19°C)	1425	670	57.8	16.9	3890	.55	.67	.79	55.9	16.4	4390	.56	.68	.81	53.8	15.8	4950	.56	.69	.82	51.6	15.1	5580	.57	.71	.84
	1625	765	58.9	17.3	3900	.57	.70	.83	57.0	16.7	4400	.57	.71	.84	54.8	16.1	4960	.58	.72	.86	52.5	15.4	5590	.59	.73	.87
	1805	850	59.8	17.5	3910	.58	.72	.86	57.8	16.9	4410	.59	.73	.87	55.6	16.3	4970	.59	.75	.89	53.2	15.6	5600	.60	.76	.91
71°F (22°C)	1425	670	61.8	18.1	3930	.42	.54	.65	59.7	17.5	4430	.42	.54	.66	57.5	16.9	4990	.43	.55	.67	55.2	16.2	5620	.43	.55	.68
	1625	765	62.9	18.4	3940	.43	.55	.67	60.8	17.8	4440	.43	.56	.68	58.5	17.1	5000	.43	.56	.69	56.1	16.4	5630	.43	.57	.71
	1805	850	63.8	18.7	3950	.43	.56	.70	61.6	18.1	4450	.43	.57	.71	59.3	17.4	5010	.44	.58	.72	56.8	16.6	5640	.44	.59	.74
13ACC-060 — CB30M-65 - CB30U-65 TXV COOLING CAPACITY																										
63°F (17°C)	1650	780	56.7	16.6	3900	.73	.86	.98	54.7	16.0	4400	.74	.88	.99	52.7	15.4	4970	.75	.89	1.00	50.5	14.8	5600	.76	.91	1.00
	1800	850	57.5	16.9	3910	.74	.89	1.00	55.6	16.3	4410	.76	.90	1.00	53.5	15.7	4980	.77	.92	1.00	51.2	15.0	5610	.78	.94	1.00
	1950	920	58.3	17.1	3920	.76	.91	1.00	56.3	16.5	4420	.78	.93	1.00	54.2	15.9	4980	.79	.94	1.00	52.0	15.2	5620	.81	.96	1.00
67°F (19°C)	1650	780	60.3	17.7	3930	.57	.70	.83	58.3	17.1	4440	.57	.71	.84	56.1	16.4	5000	.58	.72	.86	53.7	15.7	5640	.59	.74	.88
	1800	850	61.1	17.9	3940	.58	.72	.86	59.0	17.3	4450	.59	.73	.87	56.7	16.6	5010	.59	.74	.89	54.3	15.9	5640	.60	.76	.91
	1950	920	61.8	18.1	3950	.59	.74	.88	59.6	17.5	4450	.60	.75	.90	57.3	16.8	5020	.61	.77	.91	54.9	16.1	5650	.62	.78	.93
71°F (22°C)	1650	780	64.4	18.9	3970	.43	.55	.67	62.2	18.2	4480	.43	.56	.69	59.8	17.5	5040	.43	.56	.70	57.3	16.8	5680	.43	.57	.71
	1800	850	65.1	19.1	3980	.43	.56	.70	62.9	18.4	4480	.43	.57	.71	60.5	17.7	5050	.43	.58	.72	58.0	17.0	5680	.44	.59	.74
	1950	920	65.8	19.3	3990	.43	.57	.72	63.5	18.6	4490	.44	.58	.73	61.1	17.9	5060	.44	.59	.74	58.5	17.1	5690	.44	.60	.76
13ACC-060 — CB31MV-65 TXV COOLING CAPACITY																										
63°F (17°C)	1625	765	56.3	16.5	3910	.72	.86	.97	54.3	15.9	4400	.73	.87	.98	52.4	15.4	4970	.74	.88	1.00	50.2	14.7	5600	.76	.90	1.00
	1805	850	57.4	16.8	3910	.75	.89	1.00	55.5	16.3	4410	.76	.90	1.00	53.4	15.6	4980	.77	.92	1.00	51.2	15.0	5610	.79	.94	1.00
	2005	945	58.4	17.1	3920	.77	.92	1.00	56.5	16.6	4420	.78	.94	1.00	54.4	15.9	4990	.80	.95	1.00	52.1	15.3	5620	.82	.97	1.00
67°F (19°C)	1625	765	60.0	17.6	3940	.57	.69	.82	57.9	17.0	4440	.57	.71	.84	55.7	16.3	5010	.58	.72	.85	53.4	15.6	5640	.59	.73	.87
	1805	850	61.0	17.9	3950	.58	.72	.86	58.9	17.3	4450	.59	.73	.87	56.7	16.6	5020	.59	.75	.89	54.2	15.9	5650	.60	.76	.91
	2005	945	61.9	18.1	3950	.59	.75	.89	59.7	17.5	4460	.60	.76	.91	57.4	16.8	5030	.61	.78	.92	55.0	16.1	5650	.62	.79	.94
71°F (22°C)	1625	765	64.0	18.8	3970	.43	.55	.67	61.8	18.1	4480	.43	.55	.68	59.5	17.4	5050	.43	.56	.69	57.0	16.7	5680	.43	.57	.71
	1805	850	65.0	19.0	3990	.43	.56	.70	62.8	18.4	4490	.43	.57	.71	60.4	17.7	5050	.44	.58	.72	57.9	17.0	5690	.44	.59	.74
	2005	945	65.9	19.3	3990	.44	.58	.72	63.6	18.6	4490	.44	.59	.74	61.1	17.9	5060	.44	.60	.75	58.6	17.2	5700	.45	.61	.77
13ACC-060 — CVP10-65/EC10Q5 TXV COOLING CAPACITY																										
63°F (17°C)	1650	780	56.0	16.4	3790	.73	.87	.98	54.1	15.9	4270	.74	.88	.99	52.1	15.3	4820	.75	.90	1.00	50.0	14.7	5440	.77	.91	1.00
	1850	875	57.1	16.7	3800	.76	.90	1.00	55.2	16.2	4290	.77	.92	1.00	53.2	15.6	4840	.78	.93	1.00	51.0	14.9	5450	.80	.95	1.00
	2050	965	58.1	17.0	3810	.78	.93	1.00	56.2	16.5	4290	.80	.95	1.00	54.1	15.9	4850	.81	.96	1.00	52.0	15.2	5460	.83	.98	1.00
67°F (19°C)	1650	780	59.4	17.4	3820	.57	.70	.83	57.3	16.8	4310	.58	.72	.85	55.2	16.2	4860	.58	.73	.86	53.0	15.5	5470	.59	.74	.88
	1850	875	60.3	17.7	3830	.59	.73	.87	58.3	17.1	4320	.59	.75	.89	56.1	16.4	4870	.60	.76	.90	53.8	15.8	5480	.61	.77	.92
	2050	965	61.1	17.9	3840	.60	.76	.91	59.1	17.3	4330	.61	.77	.92	56.9	16.7	4870	.62	.79	.94	54.5	16.0	5490	.63	.81	.96
71°F (22°C)	1650	780	63.2	18.5	3860	.43	.55	.68	61.1	17.9	4340	.43	.56	.69	58.9	17.3	4900	.43	.57	.70	56.4	16.5	5510	.43	.58	.72
	1850	875	64.2	18.8	3870	.43	.57	.71	62.0	18.2	4350	.43	.58	.72	59.7	17.5	4900	.44	.59	.74	57.2	16.8	5520	.44	.60	.75
	2050	965	65.0	19.0	3870	.44	.59	.74	62.7	18.4	4360	.44	.60	.75	60.4	17.7	4910	.44	.61	.77	57.9	17.0	5530	.45	.62	.78