PACKAGED HEAT PUMP

KH

Landmark® Rooftop Units

60 HZ

Bulletin No. 210728
June 2016
Supersedes April 2016

PRODUCT SPECIFICATIONS

LANDMARK®

Performance Marked by Flexibility™

L Connection® NETWORK

ASHRAE 90.1 COMPLIANT

2 to 6 Tons
Net Cooling Capacity – 23,000 to 69,000 Btuh
Net Heating Capacity – 25,000 to 70,000 Btuh
Optional Electric Heat – 5 to 30 kW

MODEL NUMBER IDENTIFICATION

K H B 060 S 4 B N 1 Y

Brand/Family
K = Landmark® Product Line

Unit Type
H = Packaged Heat Pump

Major Design Sequence
A = 1st Generation
B = 2nd Generation

Nominal Cooling Capacity - Tons
024 = 2 Tons
030 = 2.5 Tons
036 = 3 Tons
048 = 4 Tons
060 = 5 Tons
072 = 6 Tons
074 = 6 Tons

Cooling Efficiency
S = Standard Efficiency

Refrigerant Type
4 = R-410A

Blower Type
D = Direct Drive
B = Belt Drive
T = Belt Drive (2 Speed)

Factory Installed Electric Heat
N = No Heat

Minor Design Sequence
1 = 1st Revision
2 = 2nd Revision
3 = 3rd Revision

Voltage
P = 208/230V−1 phase-60hz
Y = 208/230V-3 phase-60hz
G = 460V-3 phase-60hz
J = 575V-3 phase-60hz

FEATURES AND BENEFITS

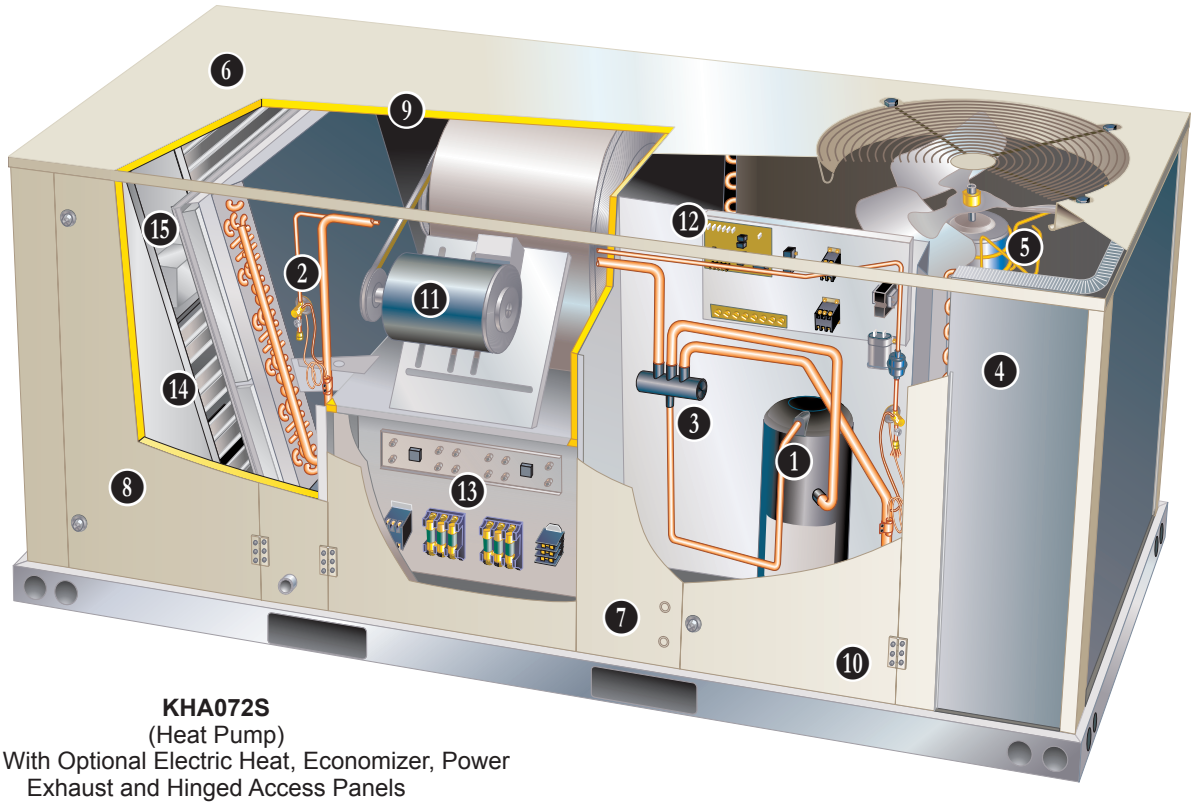

KHA072S
(Heat Pump)
Shown With Optional Electric Heat, Economizer, Power Exhaust and Hinged Access Panels

Landmark® rooftop units from Lennox are the new standard for reliable, efficient rooftop units built for long-lasting performance that can significantly improve indoor environments. Landmark rooftop units feature:

- **R-410A Refrigerant -** Environmentally friendly.
- **Single Speed Scroll Compressor -** Furnished on all KHA and KHB024 through 072 models.
- **Two-Stage Scroll Compressor -** Furnished on all KHB074 models. Allows rooftop units to deliver just the necessary amount of cooling needed to meet the space's demand.
- **High Pressure Switches -** Protect compressor.
- **Isolated Compressor Compartment -** Allows performance check during normal compressor operation without disrupting airflow.
- **Direct or Belt Drive Blower Motors -** Direct drive (024, 030, 036 and 048 models). Belt drive motors (036, 048, 060, 072 and 074 models) to maximize air performance.
- **Independent Motor Mounts -** Allows for easy and efficient service access without removing the top panel.
- **Downflow or Horizontal Airflow -** Easy field conversion.
- **Two Fork Lift Slots on Three Sides -** Easy to pick up and transport units from almost any angle.
- **Corrosion-Resistant Removable, Reversible Drain Pan -** Provides application flexibility, durability and improved serviceability.
- **Thermostatic Expansion Valves -** Provide peak cooling performance across the entire application range.
- **Common Components -** Many maintenance items are standard throughout the entire product line, reducing the need to carry different parts to the job or maintain in inventory.

CONTENTS

Blower Data - Belt Drive 25
Blower Data - Direct Drive 22
Cooling / Heating Ratings - KHA 20
Cooling / Heating Ratings - KHB 17
Dimensions - Accessories. 51
Dimensions - Unit - KHA 49
Dimensions - Unit - KHB 50
Electrical/Electric Heat Data 35
Electric Heat Capacities. 46
Features And Benefits 2
Model Number Identification 1
Optional Conventional Temperature Control Systems 47
Options / Accessories - KHA/KHB 8
Options / Accessories - KHA Only 12
Options / Accessories - KHB Only 12
Outdoor Sound Data 34
Specifications - Belt Drive Blower - KHA 16
Specifications - Belt Drive Blower - KHB 14
Specifications - Direct Drive Blower - KHA 15
Specifications - Direct Drive Blower - KHB 13
Unit Clearances 46
Weight Data 48

APPROVALS

AHRI Certified to AHRI Standard 210/240-2008 (2 thru 5 ton models) and AHRI Standard 340/360-2007 (6 ton models).

ETL listed.

CSA listed.

Components bonded for grounding to meet safety standards for servicing required by UL, ULC and National and Canadian Electrical Codes.

All models are ASHRAE 90.1 compliant

ISO 9001 Registered Manufacturing Quality System.

WARRANTY

Limited five years on compressors.

Limited five years Optional High Performance Economizers.

Limited one year all other covered components.

COOLING / HEATING SYSTEM

Designed to maximize sensible and latent cooling performance at design conditions.

System can operate from 30°F to 125°F without any additional controls.

R-410A Refrigerant
Non-chlorine, ozone friendly, R-410A.

Unit pre-charged with refrigerant. See Specification table.

❶ **Single Speed Scroll Compressor (024 through 072 Models)**
Scroll compressors for high performance, reliability and quiet operation.

Resiliently mounted on rubber grommets for quiet operation.

Copeland Scroll Ultra Tech™ Two-Stage Compressor (074 Models)
Two-stage scroll compressors for increased part load efficiency, high performance, reliability and quiet operation.

Resiliently mounted on rubber grommets for quiet operation.

Compressor Crankcase Heater
Protects against refrigerant migration that can occur during low ambient operation.

High Pressure Switch
Protects the compressor from overload conditions such as dirty condenser coils, blocked refrigerant flow, or loss of outdoor fan operation.

❷ **Check/Thermal Expansion Valves**
Assures optimal performance throughout the application range.

Removable element head.

❸ **Reversing Valve**
4-way interchange reversing valve effects a rapid change in direction of refrigerant flow resulting in quick changeover from cooling to heating and vice versa.

Defrost Control
Provides a defrost cycle, if needed, every 30 or 60 or 90 minutes (adjustable) of compressor “on” time at outdoor coil temperature below 35°F. Temperature switch mounted on outdoor coil liquid line terminates defrost cycle.

Filter/Drier
High capacity filter/drier protects the system from dirt and moisture.

Freezestat
Protects the evaporator coil from damaging ice build-up due to conditions such as low/no air flow, or low refrigerant charge.

❹ **Coil Construction**
Copper tube construction, enhanced rippled-edge aluminum fins, flared shoulder tubing connections, silver soldered construction for improved heat transfer. Factory leak tested.

Indoor Coil
Cross row circuiting with rifled copper tubing optimizes both sensible and latent cooling capacity.

COOLING / HEATING SYSTEM (continued)

Condensate Drain Pan
Plastic pan, sloped to meet drainage requirements of ASHRAE 62.1.

Side or bottom drain connections. Reversible to allow connection at back of unit.

❺ **Outdoor Coil Fan Motor**
Thermal overload protected, totally enclosed, permanently lubricated sleeve (024, 030, 036 and 048 models) or ball bearings (060, 072 and 074 models), shaft up, wire basket mount.

Outdoor Coil Fan
PVC coated fan guard furnished.

Required Selections

Cooling Capacity
Specify nominal cooling capacity of the unit.

Options/Accessories

Field Installed

Condensate Drain Trap
Field installed only.

Available in copper or PVC.

Drain Pan Overflow Switch
Monitors condensate level in drain pan, shuts down unit if drain becomes clogged.

Low Ambient Kit
Cycles the outdoor fan while allowing compressor operation in the cooling cycle. This intermittent fan operation allows the system to operate without icing the evaporator coil and losing capacity. Designed for use in ambient temperatures no lower than 0°F.

CABINET

❻ **Construction**
Heavy-gauge steel panels and full perimeter heavy-gauge galvanized steel base rail provides structural integrity for transportation, handling, and installation.

Base rails have rigging holes. Three sides of the base rail have fork slots.

Raised edges around duct and power entry openings in the bottom of the unit provide additional protection against water entering the building.

Airflow Choice
Units are shipped in down-flow (vertical) configuration, can be field converted to horizontal air flow configuration without the need of a kit.

❼ **Power Entry**
Electrical lines can be brought through the unit base or through horizontal access knock-outs.

❽ **Exterior Panels**
Constructed of heavy-gauge, galvanized steel with a two-layer enamel paint finish.

❾ **Insulation**
All panels adjacent to conditioned air are fully insulated with non-hygroscopic fiberglass insulation. Unit base is fully insulated. The insulation also serves as an air seal to the roof curb, eliminating the need to add a seal during installation.

Access Panels
Access panels are provided for the economizer/filter section, heating/blower section, and the compressor/controls section.

NOTE - KHA060/072 and KHB048/060/074 models include a filler panel for proper cabinet fit for optional accessories (Economizers, Power Exhaust, Outdoor Air Dampers and Barometric Relief Dampers).

Options/Accessories

Factory Installed

Corrosion Protection
A completely flexible immersed coating with an electrodeposited dry film process. (AST ElectroFin E-Coat) Meets Mil Spec MIL-P-53084, ASTM B117 Standard Method Salt Spray Testing.

Indoor Corrosion Protection:
- Coated coil
- Painted blower housing
- Painted base

Outdoor Corrosion Protection:
- Coated coil
- Painted base

❿ **Hinged Access Panels**
Large access panels are hinged and have quarter-turn latches for quick and easy access to maintenance areas (economizer / filter, compressor / controls, heating / blower).

Field Installed

Combination Coil/Hail Guards
Heavy gauge steel frame painted to match cabinet with expanded metal mesh to protect the outdoor coil from damage.

⓫ BLOWER

A wide selection of supply air blower options are available to meet a variety of air flow requirements.

Motor
Overload protected, equipped with ball bearings (belt drive) or sleeve bearings (direct drive).

Direct drive motors are offered on 024, 030, 036 and 048 models.

Single Speed belt drive motors are offered on 036, 048, 060 and 072 models and are available in several different sizes to maximize air performance.

Two-speed belt drive motors (low static/high static) are available on 074 models in several different sizes to maximize air performance.

Supply Air Blower
Forward curved blades, blower wheel is statically and dynamically balanced.

All belt drive motors have adjustable pulley for speed change.

Ordering Information
Specify direct drive or belt drive motor.

For belt drive, specify motor horsepower and drive kit number when base unit is ordered.

BLOWER (continued)

Required Selections

Supply Air Blower
Order one, belt drive or direct drive (See Blower Data Table for specifications).

Order one drive kit, belt drive only, see Drive Kit Specifications Table.

CONTROLS

⓬ **Unit Control**
All control voltage is provided via a 24V (secondary) transformer with built-in circuit breaker protection.

Heat/Cool Staging - Capable of up to 2 heat / 2 cool staging with a third party DDC control system or thermostat.

Low Voltage Terminal Block - Provides screw terminal connections for thermostat or controller wiring.

Night Setback Mode - Saves energy by closing outdoor air dampers and operating supply fan on thermostat demand only.

Options/Accessories

Field Installed

L Connection® Network
Complete building automation control system for single or multi-zone applications. Options include local interface, software for local or remote communication, and hardware for networking other control functions. See L Connection Network Product Specifications Bulletin for details.

Smoke Detector
Photoelectric type, installed in supply air section, return air section or both sections. Available with power board and single sensor (supply or return) or power board and two sensors (supply and return). Power board located in unit control compartment.

Thermostats
Control system and thermostat options, see page 47.

Aftermarket unit controller options, see Options/Accessories table.

INDOOR AIR QUALITY

Air Filters
Disposable 2 inch filters furnished as standard.

Options/Accessories

Field Installed

Healthy Climate® High Efficiency Air Filters
Disposable MERV 8 or MERV 13 (Minimum Efficiency Reporting Value based on ASHRAE 52.2) efficiency 2 inch pleated filters.

Healthy Climate® UVC Germicidal Lamps

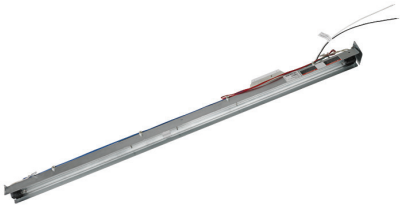

Helps eliminate mold and bacterial growth on the evaporator and drain pans. Improves indoor air quality and maintains efficiency of system by reducing fouling of evaporator coil.

Indoor Air Quality (CO_2) Sensor
Monitors CO_2 levels adjusts economizer dampers as needed for Demand Control Ventilation.

ELECTRICAL

Marked & Color-Coded Wiring
All electrical wiring is color-coded and marked to identify which components it is connecting.

Electrical Plugs
Positive connection electrical plugs are used to connect common accessories or maintenance parts for easy removal or installation.

Required Selections

Voltage Choice
Specify when ordering base unit.

Options/Accessories

Factory or Field Installed

Disconnect Switch up to 150 Amp
Accessible from outside of unit, spring loaded weatherproof cover furnished. Main power to the unit is field connected to the disconnect which allows all power to be shut off for service. See Electrical/ Electric Heat tables for ordering information, page 35.

GFI Service Outlets (2)
115V ground fault circuit interrupter (GFCI) type, non-powered, field-wired.

Field Installed

⓭ **Electric Heat**
Helix wound nichrome elements, individual element limit controls, wiring harness. Unit fuse block is furnished as standard. See Options / Accessories tables for ordering information.

GFI Weatherproof Cover
Single-gang cover.

Heavy-duty UV-resistant polycarbonate case construction.

Hinged base cover with gasket.

ECONOMIZER OPTIONS

Factory or Field Installed

14 Economizer (Standard and High Performance Common Features)

Outdoor Air Hood is furnished.

Factory installed Economizer can be ordered with two exhaust options:

- Barometric Relief Dampers and Exhaust Hood.
- No Exhaust.

Field installed Economizer includes Barometric Relief Dampers with Exhaust Hood.

Barometric Relief Dampers allow relief of excess air, aluminum blade dampers prevent blow back and outdoor air infiltration during off cycle, bird screen furnished.

Occupied/Unoccupied mode with field furnished setback thermostat.

Demand Control Ventilation (DCV) ready using optional CO_2 sensors.

Mixed Air Sensor is furnished for field installation in the rooftop unit. Sensor is factory installed when Economizers are factory installed.

Single sensible sensor is furnished with Economizer and enables economizer operation if the outdoor temperature is less than the setpoint of the control.

Horizontal Economizer Conversion kit is available for field installation.

Standard Economizer Features (Not for Title 24)

Gear-driven action, return air and outdoor air dampers, plug-in connections to unit, neoprene seals, 24-volt, fully-modulating spring return motor.

Standard Economizer Control Module

The Standard Economizer Control Module can be adjusted to operate based on outdoor air temperatures.

Economizer Controls:

- Damper Minimum Position - Can be set lower than traditional minimum air requirements resulting in cost savings.
- IAQ Sensor - Signals dampers to modulate and maintain 55°F when CO_2 is higher than the CO_2 setpoint.
- Demand Control Ventilation (DCV) LED - A steady green Demand Control Ventilation LED indicates the IAQ reading is higher than setpoint and requires more fresh air.
- Free Cool LED - A steady green LED indicates outdoor air is suitable for free cooling.

Free Cooling runs when outdoor air temperature is lower than the set temperature on the economizer control.

NOTE: The Free Cooling default setting for outdoor air temperature sensor is 55°F.

High Performance Economizer Features

Approved for California Title 24 building standards.

ASHRAE 90.1-2010 compliant.

Gear-driven action, high torque 24-volt fully-modulating spring return damper motor, return air and outdoor air dampers, plug-in connections to unit, nylon bearings, enhanced neoprene blade edge seals and flexible stainless steel jamb seals to minimize air leakage.

NOTE - High Performance Economizers are not approved for use with enthalpy controls in Title 24 applications.

High Performance Economizer Control Module

Module provides inputs and outputs to control economizer based on parameter settings. Module automatically detects sensors by polling to determine which sensors are installed in system.

Module displays any alarm messages (fault detection and diagnostics) as an aid in troubleshooting.

Non-volatile memory retains parameter settings in case of power failure.

Keypad with four navigation buttons and LCD screen is furnished for setting economizer parameters.

- Menu Up/Exit button returns to the main menu.
- Arrow Up ▲ button moves to the previous or next parameter within the selected menu.
- Arrow Down ▼ button moves to the next parameter within the selected menu.
- Select (enter) ↵ button confirms parameter selection.

Main Menu Structure:

- STATUS (economizer and system operation status)
- SETPOINTS (settings for various setpoint parameters)
- SYSTEM SETUP (settings/ information about the system)
- ADVANCED SETUP (freeze protection, CO2 settings, stage 3 delay and additional calibration settings)
- CHECKOUT (damper positions)
- ALARMS (output signal that can be configured for remote alarm monitoring)

NOTE - The Free Cooling setpoint for Title 24 applications must be set based on the Climate Zone where the system is installed. See Section 140.4 "Prescriptive Requirements for Space Conditioning Systems" of the California Energy Commission's 2013 Building Energy Efficiency Standards.

Refer to Installation Instructions for complete setup information and menu parameters available.

ECONOMIZER OPTIONS (continued)

Factory or Field Installed

Single Enthalpy Temperature Control (Not for Title 24)
Outdoor air enthalpy sensor enables Economizer if the outdoor enthalpy is less than the setpoint of the control.

Field Installed

Differential Enthalpy Control (Not for Title 24)
Order two Single Enthalpy Controls. One is field installed in the return air section, the other in the outdoor air section. Allows the economizer control board to select between outdoor air or return air, whichever has lower enthalpy.

Horizontal Economizer Conversion Kit
Insulated panel covers the bottom return air opening on the unit base to convert downflow Economizer to horizontal airflow.

EXHAUST OPTION

Field Installed

15 Power Exhaust Fan
Installs internal to unit for downflow applications only with Economizer option. Provides exhaust air pressure relief. Interlocked to run when supply air blower is operating, fan runs when outdoor air dampers are 50% open (adjustable), motor is overload protected.

Fan is 16 in. diameter with 4 fan blades and a 1/3 hp motor.

NOTE - Not available for 024 and 030 models.

NOTE - If Power Exhaust is field installed with a factory installed Economizer, the Economizer must be ordered with the "No Exhaust" option and the Barometric Relief Dampers with Exhaust Hood must also be ordered separately for field installation.

OUTDOOR AIR OPTIONS

Factory or Field Installed

Outdoor Air Dampers - Downflow or Horizontal
Linked mechanical dampers, 0 to 35% (fixed) outdoor air adjustable, installs in unit.

Automatic model features fully modulating spring return damper motor with plug-in connection.

Manual model features a slide damper. Maximum mixed air temperature in cooling mode: 100°F.

Outdoor Air Hood is furnished.

ROOF CURBS

Hybrid Roof Curbs, Downflow
Nailer strip furnished, mates to unit, U.S. National Roofing Contractors Approved, shipped knocked down.

Roof curb can be assembled using interlocking tabs to fasten corners together. No tools required.

Curb can also be fastened together with furnished hardware.

Available in 8, 14, 18, and 24 inch heights.

Full Perimeter Curbs, Downflow (072 and 074 Models Only)
Hybrid roof curbs can be assembled using interlocking tabs to fasten corners together. No tools required.

Hybrid roof curbs can also be fastened together with furnished hardware.

Available in 8, 14, 18, and 24 inch heights.

NOTE - 072 and 074 models can be used on smaller 79-3/4 in. Hybrid Roof Curbs (not full perimeter) with 15-3/4 in. overhang at condenser end of unit. See dimension drawing on page 55.

Adjustable Pitch Curb
Fully adjustable pitch curb provides a level platform for rooftop units allowing flexible installations on roofs with uneven or sloped angles.

Maximum slope is 3/4 in. per foot in any direction.

Uses interlocking tabs to fasten corners together. No tools required.

Hardware is furnished to connect upper curb with lower curb.

Available in 14 inch height.

Adaptor Curbs (not shown)
Curbs are regionally sourced. Dimensions will vary based upon the source. Contact your local sales representative for a detailed cut sheet with applicable dimensions.

CEILING DIFFUSERS

Ceiling Diffusers (Flush and Step-Down)
Diffuser face and grilles with white powder coat finish, insulated (UL listed duct liner), diffuser box with collars for duct connection, fixed blades (flush diffusers) and double deflection blades (step-down diffusers), provisions for suspending, internally sealed (prevents recirculation), removable return air grille, adapts to T-bar ceiling grids or plaster ceilings.

Transitions (Supply and Return)
Used with diffusers, installs in roof curb, galvanized steel construction, flanges furnished for duct connection to diffusers, fully insulated.

OPTIONS / ACCESSORIES - KHA/KHB

Item	Model No.	Catalog No.	Unit Model No. KHB 024	KHB 030	KHA KHB 036	KHA KHB 048	KHA KHB 060	KHA 072	KHB 074
COOLING SYSTEM									
Condensate Drain Trap	PVC - C1TRAP20AD2	**76W26**	X	X	X	X	X	X	X
	Copper - C1TRAP10AD2	**76W27**	X	X	X	X	X	X	X
Drain Pan Overflow Switch	K1SNSR71AB1	**74W42**	X	X	X	X	X	X	X
Low Ambient Kit	K1SNSR13A-2	**14D96**	X	X	X	X	X	X	X
Efficiency		Standard	O	O	O	O	O	O	O
Refrigerant Type		R-410A	O	O	O	O	O	O	O
BLOWER - SUPPLY AIR									
Motors	Direct Drive - 0.25 hp (208/230V-1ph)	Factory	O	O					
	Direct Drive - 0.5 hp (208/230V-1ph, 208/230V-3ph, 460V-3ph, 575V-3ph)	Factory			O	O			
	Belt Drive - 0.75 hp (208/230V-1ph) Standard Efficiency	Factory			[1] O	[1] O	[1] O		
	Belt Drive - 1.5 hp (208/230V-1ph) Standard Efficiency	Factory			[1] O	[1] O	[1] O		
	Belt Drive - 1 hp (208/230V, 460V, 575V-3ph) Standard Efficiency	Factory			O	O	O		
	Belt Drive - 1.5 hp (208/230V, 460V, 575V-3ph) Standard Efficiency	Factory						O	
	Belt Drive - 2 hp (208/230V, 460V, 575V-3ph) Standard Efficiency	Factory			O	O	O	O	
	Belt Drive - 1 hp (208/230V, 460V, 575V-3ph) (2 Speed)	Factory							O
	Belt Drive - 2 hp (208/230V, 460V, 575V-3ph) (2 Speed)	Factory							O
Drive Kits See Blower Data Tables for selection	Kit A01 - T1DRKT001-1 - 673-1010 rpm	Factory			O				
	Kit A02 - T1DRKT002-1 - 745-1117 rpm	Factory				O			
	Kit A03 - T1DRKT003-1 - 833-1250 rpm	Factory					O		
	Kit A04 - T1DRKT004-1 - 968-1340 rpm	Factory						O	O
	Kit A05 - T1DRKT005-1 - 897-1346 rpm	Factory			O				
	Kit A06 - T1DRKT006-1 - 1071-1429 rpm	Factory				O			
	Kit A07 - T1DRKT007-1 - 1212-1548 rpm	Factory					O		
	Kit A08 - T1DRKT008-1 - 1193-1591 rpm	Factory						O	O
CABINET									
Corrosion Protection			O	O	O	O	O	O	O
Hinged Access Panels			O	O	O	O	O	O	O
CONTROLS									
Commercial Controls	L Connection® Building Automation System	- - -	X	X	X	X	X	X	X
BACnet® Thermostat with Display	K0SNSR01FF1	**97W23**	X	X	X	X	X	X	X
BACnet® Thermostat without Display	K0SNSR00FF1	**97W24**	X	X	X	X	X	X	X
Plenum Cable (75 ft.)	K0MISC00FF1	**97W25**	X	X	X	X	X	X	X
Smoke Detector - Supply or Return (Power board and one sensor)	C1SNSR44AP1	**53W78**	X	X	X	X	X	X	X
Smoke Detector - Supply and Return (Power board and two sensors)	C1SNSR43AP1	**53W79**	X	X	X	X	X	X	X

[1] 1 phase belt drive blower motors are available for KHB models only.

NOTE - The catalog and model numbers that appear here are for ordering field installed accessories only.

OX - Field Installed or Configure to Order (factory installed)

O - Configure to Order (Factory Installed)

X - Field Installed

OPTIONS / ACCESSORIES - KHA/KHB

Item	Model No.	Catalog No.	Unit Model No. KHB 024	KHB 030	KHA KHB 036	KHA KHB 048	KHA KHB 060	KHA 072	KHB 074
ECONOMIZER									
Standard Economizer With Outdoor Air Hood (Sensible Control) (Not for Title 24)									
Standard Economizer - Includes Barometric Relief Dampers and Exhaust Hood	K1ECON30A-3-	**14D90**	OX	OX	OX	OX	OX	OX	OX
Economizer - No Exhaust		Factory	O	O	O	O	O	O	O
Standard Economizer Controls (Not for Title 24)									
Single Enthalpy Control	C1SNSR64FF1	**53W64**	OX	OX	OX	OX	OX	OX	OX
Differential Enthalpy Control (order 2)	C1SNSR64FF1	**53W64**	X	X	X	X	X	X	X
High Performance Economizer With Outdoor Air Hood (Sensible Control) (Approved for California Title 24 Building Standards)									
High Performance Economizer - Includes Barometric Relief Dampers and Exhaust Hood	K1ECON32A-2	**14D91**	OX	OX	OX	OX	OX	OX	OX
Hgh Performance Economizer - No Exhaust		Factory	O	O	O	O	O	O	O
High Performance Economizer Controls (Not for Title 24)									
Single Enthalpy Control	C1SNSR60FF1	**10Z75**	OX	OX	OX	OX	OX	OX	OX
Differential Enthalpy Control (order 2)	C1SNSR60FF1	**10Z75**	X	X	X	X	X	X	X
Economizer Accessories									
Horizontal Economizer Conversion Kit	T1HECK00AN1	**17W45**	X	X	X	X	X	X	X
OUTDOOR AIR									
Outdoor Air Dampers - Includes Outdoor Air Hood									
Manual	C1DAMP11A-1	**53W34**	OX	OX	OX	OX	OX	OX	OX
Motorized	K1DAMP21A-1	**79W95**	OX	OX	OX	OX	OX	OX	OX
POWER EXHAUST FAN									
Standard Static	208/230V-1 or 3ph - C1PWRE10A-1P	**79W87**			X	X	X	X	X
NOTE - Order Barometric Relief Dampers with Exhaust Hood below if unit is ordered with factory installed Economizer with "No Exhaust" option	460V-3ph - C1PWRE10A-1G	**79W88**			X	X	X	X	X
	575V-3ph - C1PWRE10A-1J	**79W89**			X	X	X	X	X
[1] BAROMETRIC RELIEF									
Barometric Relief Dampers with Exhaust Hood	C1DAMP50A-1-	**74W38**	X	X	X	X	X	X	X

[1] Required when Economizer is factory installed (no exhaust option) with field installed Power Exhaust Fan option.

NOTE - The catalog and model numbers that appear here are for ordering field installed accessories only.

OX - Field Installed or Configure to Order (factory installed)

O - Configure to Order (Factory Installed)

X - Field Installed

OPTIONS / ACCESSORIES - KHA/KHB

Item	Model No.	Catalog No.	Unit Model No. KHB 024	KHB 030	KHA KHB 036	KHA KHB 048	KHA KHB 060	KHA 072	KHB 074
ELECTRICAL									
Disconnect	See Electrical/Electric Heat Tables for selection		OX	OX	OX	OX	OX	OX	OX
Voltage 60 hz	208/230V - 1 phase		O	O	[1] O	[1] O	[1] O		
	208/230V - 3 phase				O	O	O	O	O
	460V - 3 phase				O	O	O	O	O
	575V - 3 phase				O	O	O	O	O
GFI Service Outlets	15 amp non-powered, field-wired (208/230V, 460V only) LTAGFIK10/15	**74M70**	OX	OX	OX	OX	OX	OX	OX
	20 amp non-powered, field-wired (575V only) C1GFCI20FF1	**67E01**	X	X	X	X	X	X	X
Weatherproof Cover for GFI	C1GFCI99FF1	**10C89**	X	X	X	X	X	X	X
ELECTRIC HEAT									
5 kW	208/230V- 1ph - K1EH0050A-1P	**12F06**	X	X					
7.5 kW	208/230V-1ph - T1EH0075AN1P	**14W32**	X	X	[1] X	[1] X	[1] X		
	208/230V-3ph - T1EH0075AN1Y	**14W35**			X	X	X	X	X
	460V-3ph - T1EH0075AN1G	**14W39**			X	X	X	X	X
	575V-3ph - T1EH0075AN1J	**14W43**			X	X	X	X	X
10 kW	208/230V-1ph - T1EH0100A1P	**30W26**	X	X					
15 kW	208/230V-1ph - T1EH0150AN1P	**14W33**			[1] X	[1] X	[1] X		
	208/230V-3ph - T1EH0150AN1Y	**14W36**			X	X	X	X	X
	460V-3ph - T1EH0150AN1G	**14W40**			X	X	X	X	X
	575V-3ph - T1EH0150AN1J	**14W44**			X	X	X	X	X
22.5 kW	208/230V-1ph - T1EH0225AN1P	**14W34**					[1] X		
	208/230V-3ph - T1EH0225AN1Y	**14W37**					X	X	X
	460V-3ph - T1EH0225AN1G	**14W41**					X	X	X
	575V-3ph - T1EH0225AN1J	**14W45**					X	X	X
30 kW	208/230V-3ph - T1EH0300N-1Y	**14W38**						X	X
	460V-3ph - T1EH0300N-1G	**14W42**						X	X
	575V-3ph - T1EH0300N-1J	**14W46**						X	X

[1] KHB models only.

NOTE - The catalog and model numbers that appear here are for ordering field installed accessories only.
OX - Field Installed or Configure to Order (factory installed)
O - Configure to Order (Factory Installed)
X - Field Installed

OPTIONS / ACCESSORIES - KHA/KHB

Item	Model No.	Catalog No.	Unit Model No. KHB 024	KHB 030	KHA KHB 036	KHA KHB 048	KHA KHB 060	KHA 072	KHB 074
INDOOR AIR QUALITY									
Indoor Air Quality (Co_2) Sensors									
Sensor - Wall-mount, off-white plastic cover with LCD display	C0SNSR50AS1L	**77N39**	X	X	X	X	X	X	X
Sensor - Wall-mount, black plastic case, no display, rated for plenum mounting	C0SNSR53AE1L	**87N54**	X	X	X	X	X	X	X
CO_2 Sensor Duct Mounting Kit - for downflow applications		**85L43**	X	X	X	X	X	X	X
Aspiration Box - for duct mounting non-plenum rated CO2 sensor (**77N39**)		**90N43**	X	X	X	X	X	X	X
UVC Germicidal Lamps									
[1] Healthy Climate® UVC Light Kit (208/230v-1ph)	E1UVCL10AN1	**50W90**	X	X	X	X	X	X	X
ROOF CURBS									
Hybrid Roof Curbs, Downflow									
8 in. height	C1CURB70A-1	**11F50**	X	X	X	X	X	[2] X	[2] X
14 in. height	C1CURB71A-1	**11F51**	X	X	X	X	X	[2] X	[2] X
18 in. height	C1CURB72A-1	**11F52**	X	X	X	X	X	[2] X	[2] X
24 in. height	C1CURB73A-1	**11F53**	X	X	X	X	X	[2] X	[2] X
Hybrid Roof Curbs, Full Perimeter, Downflow									
8 in. height	K1CURB70AP1	**11S47**						X	X
14 in. height	K1CURB71AP1	**11S48**						X	X
18 in. height	K1CURB72AP1	**11T01**						X	X
24 in. height	K1CURB73AP1	**11T06**						X	X
Adjustable Pitch Curb, Downflow									
14 in. height	C1CURB55AT1	**43W27**	X	X	X	X	X	X	X
CEILING DIFFUSERS									
Step-Down - Order one	RTD9-65S	**13K60**	X	X	X	X	X		
	RTD11-95S	**13K61**						X	X
Flush - Order one	FD9-65S	**13K55**	X	X	X	X	X		
	FD11-95S	**13K56**						X	X
Transitions (Supply and Return) - Order one	T1TRAN10AN1	**17W53**	X	X	X	X	X		
	T1TRAN20N-1	**17W54**						X	X

[1] Lamps operate on 110-230V single-phase power supply. Step-down transformer may be ordered separately for 460V and 575V units. Alternately, 110V power supply may be used to directly power the UVC ballast(s).
[2] 072 and 074 models will fit smaller roof curbs with overhang. See dimension drawing.

NOTE - The catalog and model numbers that appear here are for ordering field installed accessories only.

OX - Field Installed or Configure to Order (factory installed)

O - Configure to Order (Factory Installed)

X - Field Installed

OPTIONS / ACCESSORIES - KHA ONLY

Item	Model No.	Catalog No.	Unit Model No. KHA 036	KHA 048	KHA 060	KHA 072
CABINET						
Combination Coil/Hail Guards	C1GARD51A-1	**13R98**	X	X		
	C1GARD51AT1	**13T03**			X	
	K1GARD50AP1	**13T17**				X
CONTROLS						
BACnet®	K0CTRL31A-1	**96W14**	OX	OX		
	K0CTRL31AP1	**12B99**			OX	OX
Novar® 2051	K0CTRL30A-1	**96W11**	OX	OX		
	K0CTRL30AP1	**12B98**			OX	OX
INDOOR AIR QUALITY						
Air Filters						
Healthy Climate® High Efficiency Air Filters	MERV 8 (16 x 20 x 2) - C1FLTR15A-1-	**54W20**	X	X		
	MERV 13 (16 x 20 x 2) - T1FLTR40A-1-	**52W37**	X	X		
Order 4 per unit	MERV 8 (20 x 20 x 2) - C1FLTR15D-1-	**54W21**			X	X
	MERV 13 (20 x 20 x 2) - C1FLTR40D-1-	**52W39**			X	X

NOTE - The catalog and model numbers that appear here are for ordering field installed accessories only.
OX - Field Installed or Configure to Order (factory installed)
O - Configure to Order (Factory Installed)
X - Field Installed.

OPTIONS / ACCESSORIES - KHB ONLY

Item	Model No.	Catalog No.	Unit Model No. KHB 024	KHB 030	KHB 036	KHB 048	KHB 060	KHB 074
CABINET								
Combination Coil/Hail Guards	C1GARD51A-1	**13R98**	X	X	X			
	C1GARD51AT1	**13T03**				X	X	X
CONTROLS								
BACnet®	K0CTRL31A-1	**96W14**	OX	OX	OX			
	K0CTRL31AP1	**12B99**				OX	OX	OX
Novar® 2051	K0CTRL30A-1	**96W11**	OX	OX	OX			
	K0CTRL30AP1	**12B98**				OX	OX	OX
INDOOR AIR QUALITY								
Air Filters								
Healthy Climate® High Efficiency Air Filters	MERV 8 (16 x 20 x 2) - C1FLTR15A-1-	**54W20**	X	X	X			
	MERV 13 (16 x 20 x 2) - T1FLTR40A-1-	**52W37**	X	X	X			
Order 4 per unit	MERV 8 (20 x 20 x 2) - C1FLTR15D-1-	**54W21**				X	X	X
	MERV 13 (20 x 20 x 2) - C1FLTR40D-1-	**52W39**				X	X	X

NOTE - The catalog and model numbers that appear here are for ordering field installed accessories only.
OX - Field Installed or Configure to Order (factory installed)
O - Configure to Order (Factory Installed)
X - Field Installed.

SPECIFICATIONS - DIRECT DRIVE BLOWER - KHB

General Data	Nominal Tonnage	2 Ton	2.5 Ton	3 Ton	4 Ton
	Model No.	**KHB024S4D**	**KHB030S4D**	**KHB036S4D**	**KHB048S4D**
	Efficiency Type	Standard	Standard	Standard	Standard
	Blower Type	Multi-Speed Direct Drive	Multi-Speed Direct Drive	Multi-Speed Direct Drive	Multi-Speed Direct Drive
Cooling Performance	Gross Cooling Capacity - Btuh	23,700	29,700	36,300	48,700
	[1] Net Cooling Capacity - Btuh	23,000	28,800	35,000	46,500
	AHRI Rated Air Flow - cfm	860	1030	1200	1670
	[2] Sound Rating Number (SRN) (dBA)	75	75	75	75
	Total Unit Power - kW	2.0	2.4	3.0	4.2
	[1] SEER (Btuh/Watt)	14.0	14.0	14.0	14.0
	[1] EER (Btuh/Watt)	11.7	11.9	11.5	11.4
Refrigerant	Type	R-410A	R-410A	R-410A	R-410A
	Charge Furnished	12 lbs. 8 oz.	12 lbs. 0 oz.	12 lbs. 0 oz.	14 lbs. 7 oz.
Heating Performance	Total High Heating Capacity - Btuh	25,000	30,000	36,600	49,500
	Total Unit Power - kW	1.9	2.4	2.9	3.9
	[1] COP	3.76	3.72	3.64	3.72
	[1] HSPF - Region IV (Region V)	8.00 (6.70)	8.00 (6.70)	8.00 (6.70)	8.00 (6.70)
	Total Low Heating Capacity - Btuh	14,400	17,200	21,000	30,000
	Total Unit Power - kW	1.8	2.2	2.7	3.7
	COP	2.28	2.30	2.32	2.40
Electric Heating Options - See page 10		5, 7.5, 10 kW	5, 7.5, 10 kW	7.5, 15 kW	7.5, 15 kW
Compressor Type (no.)		Scroll (1)	Scroll (1)	Scroll (1)	Scroll (1)
Outdoor Coil	Net face area - sq. ft.	15.6	15.6	15.6	19.3
	Tube diameter - in.	3/8	3/8	3/8	3/8
	Number of rows	2	2	2	2
	Fins / inch	20	20	20	20
Outdoor Coil Fan	Motor - (No.) HP	1/4	1/4	1/4	1/4
	Motor rpm	825	825	825	825
	Total Motor Input - watts	220	230	240	290
	Diameter - (No.) in. / No. of blades	(1) 24 - 3	(1) 24 - 3	(1) 24 - 3	(1) 24 - 3
	Total air volume - cfm	3300	3300	3300	3900
Indoor Coil	Net face area - sq. ft.	7.8	7.8	7.8	9.7
	Tube diameter - in.	3/8	3/8	3/8	3/8
	Number of rows	3	3	3	3
	Fins / inch	14	14	14	14
	Drain Connection (no.) and size - in.	(1) 1 NPT	(1) 1 NPT	(1) 1 NPT	(1) 1 NPT
	Expansion device type	Balanced Port Thermostatic Expansion Valve, removable power head			
Indoor Blower	Nominal Motor HP	0.25	0.25	0.5	0.5
	Wheel nom. diameter x width - in.	(1) 10 x 10	(1) 10 x 10	(1) 10 x 10	(1) 10 x 10
Filters	Type	Disposable			Disposable
	Number and size - in.	(4) 16 x 20 x 2			(4) 20 x 20 x 2
Electrical Characteristics - 60 hz		208/230V - 1 phase		208/230V 1 phase 208/230V, 460V & 575V 3 phase	208/230V 1 phase 208/230V, 460V & 575V 3 phase

NOTE - Net capacity includes evaporator blower motor heat deduction. Gross capacity does not include evaporator blower motor heat deduction.

[1] AHRI Certified to AHRI Standard 210/240:
Cooling Ratings - 95°F outdoor air temperature and 80°F db/67°F wb entering indoor coil air.
High Temperature Heating Ratings - 47°F db/43°F wb outdoor air temperature and 70°F entering indoor coil air.
Low Temperature Heating Ratings - 17°F db/15°F wb outdoor air temperature and 70°F entering indoor coil air.

[2] Sound Rating Number (SRN) rated in accordance with test conditions included in ARI Standard 270-95.

SPECIFICATIONS - BELT DRIVE BLOWER - KHB

General Data	**Nominal Tonnage**	**3 Ton**	**4 Ton**	**5 Ton**	**6 Ton**
	Model No.	**KHB036S4B**	**KHB048S4B**	**KHB060S4B**	**KHB074S4T**
	Efficiency Type	Standard	Standard	Standard	Standard
	Blower Type	Single Speed Belt Drive	Single Speed Belt Drive	Single Speed Belt Drive	Two-Speed Belt Drive
Cooling Performance	Gross Cooling Capacity - Btuh	36,300	48,700	62,600	71,000
	Net Cooling Capacity - Btuh	[1] 35,000	[1] 46,500	[1] 60,000	[2] 68,000
	AHRI Rated Air Flow - cfm	1200	1670	2020	2100
	[3] Sound Rating Number (SRN) (dBA)	75	75	80	83
	Total Unit Power - kW	3.0	4.2	5.0	6.2
	SEER (Btuh/Watt)	[1] 14.0	[1] 14.0	[1] 14.0	- - -
	IEER (Btuh/Watt)	- - -	- - -	- - -	[2] 14.0
	EER (Btuh/Watt)	[1] 11.55	[1] 11.4	[1] 11.9	[2] 11.0
Refrigerant	Type	R-410A	R-410A	R-410A	R-410A
	Charge Furnished	12 lbs. 0 oz.	14 lbs. 7 oz.	16 lbs. 0 oz.	24 lbs. 0 oz.
Heating Performance	Total High Heating Capacity - Btuh	36,600	49,500	58,000	70,000
	Total Unit Power - kW	2.9	3.9	4.5	6.1
	[1] COP	3.64	3.72	3.72	3.30
	HSPF - Region IV (Region V)	8.00 (6.70)	8.00 (6.70)	8.00 (6.70)	- - -
	Total Low Heating Capacity - Btuh	21,000	30,000	34,600	40,000
	Total Unit Power - kW	2.7	3.7	4.2	5.2
	[1] COP	2.32	2.40	2.38	2.25
Electric Heating Options - See page 10		7.5, 15	7.5, 15	7.5, 15, 22.5	7.5, 15, 22.5, 30 kW
Compressor Type (one per unit)		Scroll	Scroll	Scroll	Two-Stage Scroll
Outdoor Coil	Net face area - sq. ft.	15.6	19.3	19.3	28.0
	Tube diameter - in.	3/8	3/8	3/8	3/8
	Number of rows	2	2	3	2
	Fins / inch	20	20	20	20
Outdoor Coil Fan	Motor - (No.) HP	(1) 1/4	(1) 1/4	(1) 1/3	(1) 1/2
	Motor rpm	825	825	1075	1075
	Total Motor Input - watts	240	290	405	505
	Diameter - (No.) in. / No. of blades	(1) 24 - 3	(1) 24 - 3	(1) 24 - 3	(1) 24 - 4
	Total air volume - cfm	3300	3900	4300	5735
Indoor Coil	Net face area - sq. ft.	7.8	9.7	9.7	9.7
	Tube diameter - in.	3/8	3/8	3/8	3/8
	Number of rows	3	3	4	4
	Fins / inch	14	14	14	14
	Drain Connection (no.) and size - in.	(1) 1 NPT	(1) 1 NPT	(1) 1 NPT	(1) 1 NPT
	Expansion device type	Balanced Port Thermostatic Expansion Valve, removable power head			
[4] **Indoor Blower & Drive Selection**	Nominal Motor HP 208/230V-1ph	0.75 hp, 1.5 hp	0.75 hp, 1.5 hp	0.75 hp, 1.5 hp	- - -
	Nominal Motor HP All others voltages	1 hp, 2 hp	1 hp, 2 hp	1 hp, 2 hp	1 hp, 2 hp
	Maximum Usable Motor HP 208/230V-1ph	0.86 hp, 1.7 hp	0.86 hp, 1.7 hp	0.86 hp, 1.7 hp	- - -
	Maximum Usable Motor HP All other voltages	1.15 hp, 2.3 hp	1.15 hp, 2.3 hp	1.15 hp, 2.3 hp	2.3 hp
	Available Drive Kits	A01 673 - 1010 rpm A05 897 - 1346 rpm	A02 745 - 1117 rpm A06 1071 - 1429 rpm	A03 833 - 1250 rpm A07 1212 - 1548 rpm	A04 968 - 1340 rpm A08 1193-1591 rpm
	Wheel nominal diameter x width - in.	(1) 10 x 10	(1) 10 x 10	(1) 10 x 10	(1) 10 x 10
Filters	Type	Disposable			
	Number and size - in.	(4) 16 x 20 x 2	(4) 20 x 20 x 2		
Electrical Characteristics - 60 hz		208/230V 1 phase 208/230V, 460V & 575V 3 phase	208/230V 1 phase 208/230V, 460V & 575V 3 phase	208/230V 1 phase 208/230V, 460V & 575V 3 phase	208/230V, 460V & 575V 3 phase

NOTE - Net capacity includes evaporator blower motor heat deduction. Gross capacity does not include evaporator blower motor heat deduction.

[1, 2] AHRI Certified to AHRI Standard [1] 210/240 or [2] 340/360 for 074 model:
Cooling Ratings - 95°F outdoor air temperature and 80°F db/67°F wb entering indoor coil air.
High Temperature Heating Ratings - 47°F db/43°F wb outdoor air temperature and 70°F entering indoor coil air.
Low Temperature Heating Ratings - 17°F db/15°F wb outdoor air temperature and 70°F entering indoor coil air.

[3] Sound Rating Number (SRN) rated in accordance with test conditions included in ARI Standard 270-95.

[4] Using total air volume and system static pressure requirements determine from blower performance tables rpm and motor hp required. Maximum usable hp of motors furnished are shown. In Canada, nominal motor hp is also maximum usable motor hp. If motors of comparable hp are used, be sure to keep within the service factor limitations outlined on the motor nameplate.

SPECIFICATIONS - DIRECT DRIVE BLOWER - KHA

General Data	**Nominal Tonnage**	**3 Ton**	**4 Ton**
	Model No.	**KHA036S4D**	**KHA048S4D**
	Efficiency Type	Standard	Standard
	Blower Type	Multi-Speed Direct Drive	Multi-Speed Direct Drive
Cooling Performance	Gross Cooling Capacity - Btuh	37,100	49,000
	[1] Net Cooling Capacity - Btuh	35,600	47,000
	AHRI Rated Air Flow - cfm	1160	1600
	[2] Sound Rating Number (SRN) (dBA)	75	75
	Total Unit Power - kW	3.3	4.4
	[1] SEER (Btuh/Watt)	13.0	13.0
	[1] EER (Btuh/Watt)	10.9	10.7
Refrigerant	Type	R-410A	R-410A
	Charge Furnished	12 lbs. 8 oz.	13 lbs. 2 oz.
Heating Performance	Total High Heating Capacity - Btuh	36,400	48,000
	Total Unit Power - kW	3.0	4.0
	[1] COP	3.6	3.5
	[1] HSPF - Region IV (Region V)	7.7 (6.7)	7.7 (6.7)
	Total Low Heating Capacity - Btuh	22,000	29,500
	Total Unit Power - kW	2.8	3.6
	COP	2.3	2.4
Electric Heating Options - See page 10		7.5, 15 kW	7.5, 15 kW
Compressor Type (one per unit)		Scroll (1)	Scroll (1)
Outdoor Coil	Net face area - sq. ft.	15.6	15.6
	Tube diameter - in.	3/8	3/8
	Number of rows	2.0	2.0
	Fins / inch	20	20
Outdoor Coil Fan	Motor - (No.) HP	(1) 1/4	(1) 1/4
	Motor rpm	825	825
	Total Motor Input - watts	250	250
	Diameter - (No.) in. / No. of blades	(1) 24 - 3	(1) 24 - 3
	Total air volume - cfm	3300	3300
Indoor Coil	Net face area - sq. ft.	7.78	7.78
	Tube diameter - in.	3/8	3/8
	Number of rows	3	3
	Fins / inch	14	14
	Drain Connection (no.) and size - in.	(1) 1 NPT	(1) 1 NPT
	Expansion device type	Balanced Port Thermostatic Expansion Valve, removable power head	
Indoor Blower	Nominal Motor HP	0.5	0.5
	Wheel nom. diameter x width - in.	(1) 10 x 10	(1) 10 x 10
Filters	Type	Disposable	
	Number and size - in.	(4) 16 x 20 x 2	
Electrical Characteristics - 60 hz		208/230V, 460V & 575V 3 phase	208/230V, 460V & 575V 3 phase

NOTE - Net capacity includes evaporator blower motor heat deduction. Gross capacity does not include evaporator blower motor heat deduction.

[1] AHRI Certified to AHRI Standard 210/240:
Cooling Ratings - 95°F outdoor air temperature and 80°F db/67°F wb entering indoor coil air.
High Temperature Heating Ratings - 47°F db/43°F wb outdoor air temperature and 70°F entering indoor coil air.
Low Temperature Heating Ratings - 17°F db/15°F wb outdoor air temperature and 70°F entering indoor coil air.

[2] Sound Rating Number (SRN) rated in accordance with test conditions included in ARI Standard 270-95.

SPECIFICATIONS - BELT DRIVE BLOWER - KHA

General Data	Nominal Tonnage	3 Ton	4 Ton	5 Ton	6 Ton
	Model No.	**KHA036S4B**	**KHA048S4B**	**KHA060S4B**	**KHA072S4B**
	Efficiency Type	Standard	Standard	Standard	Standard
	Blower Type	Single Speed Belt Drive	Single Speed Belt Drive	Single Speed Belt Drive	Single-Speed Belt Drive
Cooling Performance	Gross Cooling Capacity - Btuh	37,100	49,000	61,500	71,300
	Net Cooling Capacity - Btuh	[1] 35,600	[1] 47,000	[1] 59,000	[2] 69,000
	AHRI Rated Air Flow - cfm	1160	1600	1985	2060
	[3] Sound Rating Number (SRN) (dBA)	75	75	82	83
	Total Unit Power - kW	3.3	4.4	5.4	6.3
	SEER (Btuh/Watt)	[1] 13.0	[1] 13.0	[1] 13.0	- - -
	IEER (Btuh/Watt)	- - -	- - -	- - -	[2] 12.1
	EER (Btuh/Watt)	[1] 10.9	[1] 10.7	[1] 10.9	[2] 11.0
Refrigerant	Type	R-410A	R-410A	R-410A	R-410A
	Charge Furnished	12 lbs. 8 oz.	13 lbs. 2 oz.	16 lbs. 0 oz.	20 lbs. 8 oz.
Heating Performance	Total High Heating Capacity - Btuh	36,400	48,000	60,500	70,000
	Total Unit Power - kW	3.0	4.0	4.9	6.2
	[1] COP	3.6	3.5	3.6	3.3
	HSPF - Region IV (Region V)	7.7 (6.7)	7.7 (6.7)	7.7 (6.7)	- - -
	Total Low Heating Capacity - Btuh	22,000	29,500	36,000	40,000
	Total Unit Power - kW	2.8	3.6	4.5	5.7
	[1] COP	2.3	2.4	2.4	2.25
Electric Heating Options - See page 10		7.5, 15 kW	7.5, 15 kW	7.5, 15, 22.5 kW	7.5, 15, 22.5, 30 kW
Compressor Type (one per unit)		Scroll	Scroll	Scroll	Scroll
Outdoor Coil	Net face area - sq. ft.	15.6	15.6	19.3	28.0
	Tube diameter - in.	3/8	3/8	3/8	3/8
	Number of rows	2	2	2	2
	Fins / inch	20	20	20	20
Outdoor Coil Fan	Motor - (No.) HP	(1) 1/4	(1) 1/4	(1) 1/3	(1) 1/2
	Motor rpm	825	825	1075	1075
	Total Motor Input - watts	250	250	405	680
	Diameter - (No.) in. / No. of blades	(1) 24 - 3	(1) 24 - 3	(1) 24 - 3	(1) 24 - 4
	Total air volume - cfm	3300	3300	4800	5735
Indoor Coil	Net face area - sq. ft.	7.78	7.78	9.7	9.7
	Tube diameter - in.	3/8	3/8	3/8	3/8
	Number of rows	3	3	4	4
	Fins / inch	14	14	14	14
	Drain Connection (no.) and size - in.	(1) 1 NPT	(1) 1 NPT	(1) 1 NPT	(1) 1 NPT
	Expansion device type	Balanced Port Thermostatic Expansion Valve, removable power head			
[4] **Indoor Blower & Drive Selection**	Nominal Motor HP	1 hp, 2 hp		1 hp, 2 hp	1.5 hp, 2 hp
	Maximum Usable Motor HP	1.15 hp, 2.3 hp		1.15 hp, 2.3 hp	1.7 hp, 2.3 hp
	Available Drive Kits	A01 673 - 1010 rpm A05 897 - 1346 rpm	A02 745 - 1117 rpm A06 1071 - 1429 rpm	A03 833 - 1250 rpm A07 1212 - 1548 rpm	A04 968 - 1340 rpm A08 1193 - 1591 rpm
	Wheel nom. diameter x width - in.	(1) 10 x 10	(1) 10 x 10	(1) 10 x 10	(1) 10 x 10
Filters	Type	Disposable		Disposable	
	Number and size - in.	(4) 16 x 20 x 2		(4) 20 x 20 x 2	
Electrical Characteristics - 60 hz		208/230V, 460V & 575V 3 phase	208/230V, 460V & 575V 3 phase	208/230V, 460V & 575V 3 phase	208/230V, 460V & 575V 3 phase

NOTE - Net capacity includes evaporator blower motor heat deduction. Gross capacity does not include evaporator blower motor heat deduction.

[1, 2] AHRI Certified to AHRI Standard [1] 210/240 or [2] 340/360:
Cooling Ratings - 95°F outdoor air temperature and 80°F db/67°F wb entering indoor coil air.
High Temperature Heating Ratings - 47°F db/43°F wb outdoor air temperature and 70°F entering indoor coil air.
Low Temperature Heating Ratings - 17°F db/15°F wb outdoor air temperature and 70°F entering indoor coil air.

[3] Sound Rating Number (SRN) rated in accordance with test conditions included in ARI Standard 270-95.

[4] Using total air volume and system static pressure requirements determine from blower performance tables rpm and motor hp required. Maximum usable hp of motors furnished are shown. In Canada, nominal motor hp is also maximum usable motor hp. If motors of comparable hp are used, be sure to keep within the service factor limitations outlined on the motor nameplate.

COOLING / HEATING RATINGS - KHB

NOTE − For Temperatures and Capacities not shown in tables, see bulletin − Cooling Unit Rating Table Correction Factor Data in Miscellaneous Engineering Data section.

2 TON COOLING STANDARD EFFICIENCY KHB024S4

Entering Wet Bulb Temperature	Total Air Volume	Outdoor Air Temperature Entering Outdoor Coil																			
		85°F					95°F					105°F					115°F				
		Total Cool Cap.	Comp. Motor Input	Sensible To Total Ratio (S/T) Dry Bulb			Total Cool Cap.	Comp. Motor Input	Sensible To Total Ratio (S/T) Dry Bulb			Total Cool Cap.	Comp. Motor Input	Sensible To Total Ratio (S/T) Dry Bulb			Total Cool Cap.	Comp. Motor Input	Sensible To Total Ratio (S/T) Dry Bulb		
	cfm	kBtuh	kW	75°F	80°F	85°F	kBtuh	kW	75°F	80°F	85°F	kBtuh	kW	75°F	80°F	85°F	kBtuh	kW	75°F	80°F	85°F
63°F	640	22	1.36	0.71	0.87	1	20.3	1.55	0.72	0.89	1	18.6	1.78	0.73	0.91	1	16.6	2.03	0.75	0.95	1
	800	23.6	1.35	0.77	0.95	1	21.8	1.54	0.79	0.98	1	20	1.77	0.81	1	1	18.1	2.01	0.84	1	1
	960	24.9	1.33	0.83	1	1	23.2	1.52	0.85	1	1	21.4	1.75	0.88	1	1	19.5	2	0.92	1	1
67°F	640	23.7	1.35	0.55	0.69	0.83	21.9	1.54	0.55	0.7	0.85	20	1.76	0.54	0.71	0.88	18	2.02	0.54	0.73	0.91
	800	25.2	1.33	0.59	0.75	0.91	23.3	1.52	0.59	0.77	0.94	21.3	1.75	0.59	0.79	0.97	19.1	2	0.6	0.82	1
	960	26.3	1.31	0.63	0.81	0.99	24.3	1.51	0.63	0.83	1	22.2	1.73	0.64	0.86	1	19.9	1.99	0.65	0.9	1
71°F	640	25.5	1.33	0.4	0.54	0.67	23.6	1.52	0.39	0.54	0.68	21.7	1.74	0.38	0.54	0.69	19.5	1.99	0.36	0.54	0.71
	800	27	1.3	0.42	0.58	0.73	25.1	1.49	0.42	0.58	0.75	23	1.72	0.4	0.59	0.77	20.7	1.98	0.39	0.6	0.79
	960	28.1	1.28	0.44	0.62	0.79	26.1	1.48	0.43	0.63	0.81	23.9	1.71	0.43	0.64	0.84	21.4	1.96	0.42	0.65	0.88

2 TON HEATING STANDARD EFFICIENCY KHB024S4

Indoor Coil Air Volume 70°F Dry Bulb cfm	Air Temperature Entering Outdoor Coil									
	65°F		45°F		25°F		5°F		-15°F	
	Total Heating Capacity	Comp. Motor Input Input	Total Heating Capacity	Comp. Motor Input Input	Total Heating Capacity	Comp. Motor Input Input	Total Heating Capacity	Comp. Motor Input Input	Total Heating Capacity	Comp. Motor Input Input
	kBtuh	kW	kBtuh	kW	kBtuh	kW	kBtuh	kW	kBtuh	kW
640	30.6	1.73	23.2	1.65	15.6	1.57	10.2	1.42	5.1	1.06
800	31	1.6	23.7	1.52	16	1.44	10.7	1.29	5.6	0.94
960	31.4	1.52	24.1	1.44	16.4	1.36	11.1	1.22	6	0.86

2.5 TON COOLING STANDARD EFFICIENCY KHB030S4

Entering Wet Bulb Temperature	Total Air Volume	Outdoor Air Temperature Entering Outdoor Coil																			
		85°F					95°F					105°F					115°F				
		Total Cool Cap.	Comp. Motor Input	Sensible To Total Ratio (S/T) Dry Bulb			Total Cool Cap.	Comp. Motor Input	Sensible To Total Ratio (S/T) Dry Bulb			Total Cool Cap.	Comp. Motor Input	Sensible To Total Ratio (S/T) Dry Bulb			Total Cool Cap.	Comp. Motor Input	Sensible To Total Ratio (S/T) Dry Bulb		
	cfm	kBtuh	kW	75°F	80°F	85°F	kBtuh	kW	75°F	80°F	85°F	kBtuh	kW	75°F	80°F	85°F	kBtuh	kW	75°F	80°F	85°F
63°F	800	28	1.61	0.74	0.88	1	26.5	1.84	0.76	0.9	1	24.9	2.1	0.78	0.93	1	23.3	2.41	0.8	0.96	1
	1000	29.6	1.62	0.79	0.95	1	28.1	1.85	0.81	0.97	1	26.4	2.11	0.84	1	1	24.8	2.41	0.87	1	1
	1200	31	1.63	0.85	1	1	29.4	1.86	0.87	1	1	27.9	2.12	0.9	1	1	26.1	2.42	0.93	1	1
67°F	800	29.7	1.62	0.59	0.72	0.84	28.2	1.85	0.59	0.73	0.87	26.4	2.12	0.6	0.75	0.89	24.6	2.41	0.62	0.78	0.93
	1000	31.2	1.63	0.62	0.77	0.92	29.5	1.86	0.63	0.79	0.94	27.8	2.12	0.64	0.81	0.97	25.8	2.42	0.66	0.84	1
	1200	32.4	1.64	0.65	0.82	0.98	30.6	1.87	0.66	0.85	1	28.6	2.13	0.68	0.88	1	26.6	2.42	0.7	0.91	1
71°F	800	31.5	1.63	0.45	0.57	0.7	29.8	1.86	0.44	0.58	0.71	28.1	2.12	0.45	0.59	0.73	26.1	2.42	0.45	0.6	0.75
	1000	33.2	1.64	0.45	0.6	0.75	31.3	1.87	0.46	0.62	0.77	29.5	2.13	0.46	0.63	0.79	27.4	2.42	0.47	0.65	0.82
	1200	34.4	1.65	0.47	0.64	0.8	32.4	1.88	0.47	0.65	0.82	30.4	2.14	0.48	0.67	0.85	28.2	2.43	0.49	0.69	0.88

2.5 TON HEATING STANDARD EFFICIENCY KHB030S4

Indoor Coil Air Volume 70°F Dry Bulb cfm	Air Temperature Entering Outdoor Coil									
	65°F		45°F		25°F		5°F		-15°F	
	Total Heating Capacity	Comp. Motor Input Input	Total Heating Capacity	Comp. Motor Input Input	Total Heating Capacity	Comp. Motor Input Input	Total Heating Capacity	Comp. Motor Input Input	Total Heating Capacity	Comp. Motor Input Input
	kBtuh	kW	kBtuh	kW	kBtuh	kW	kBtuh	kW	kBtuh	kW
800	37.2	2.12	28.1	2.01	18.8	1.89	12.1	1.7	6.1	1.28
1000	37.8	1.96	28.7	1.85	19.3	1.74	12.7	1.55	6.6	1.12
1200	38.2	1.87	29.2	1.76	19.8	1.64	13.1	1.45	7.1	1.03

COOLING / HEATING RATINGS - KHB

NOTE − For Temperatures and Capacities not shown in tables, see bulletin − Cooling Unit Rating Table Correction Factor Data in Miscellaneous Engineering Data section.

3 TON COOLING STANDARD EFFICIENCY KHB036S4

Entering Wet Bulb Temperature	Total Air Volume	Outdoor Air Temperature Entering Outdoor Coil																			
		85°F					95°F					105°F					115°F				
		Total Cool Cap.	Comp. Motor Input	Sensible To Total Ratio (S/T) Dry Bulb			Total Cool Cap.	Comp. Motor Input	Sensible To Total Ratio (S/T) Dry Bulb			Total Cool Cap.	Comp. Motor Input	Sensible To Total Ratio (S/T) Dry Bulb			Total Cool Cap.	Comp. Motor Input	Sensible To Total Ratio (S/T) Dry Bulb		
	cfm	kBtuh	kW	75°F	80°F	85°F	kBtuh	kW	75°F	80°F	85°F	kBtuh	kW	75°F	80°F	85°F	kBtuh	kW	75°F	80°F	85°F
63°F	960	34.7	2.1	0.71	0.87	1	32.3	2.37	0.73	0.89	1	29.7	2.69	0.74	0.92	1	26.9	3.06	0.77	0.96	1
	1200	36.9	2.11	0.77	0.95	1	34.3	2.38	0.79	0.98	1	31.5	2.7	0.82	1	1	29	3.06	0.85	1	1
	1440	38.5	2.12	0.83	1	1	36.1	2.39	0.86	1	1	33.6	2.71	0.89	1	1	30.9	3.07	0.93	1	1
67°F	960	37.1	2.11	0.56	0.69	0.83	34.6	2.38	0.56	0.71	0.85	31.8	2.7	0.56	0.72	0.88	28.9	3.06	0.57	0.74	0.92
	1200	39.1	2.12	0.59	0.75	0.91	36.4	2.39	0.6	0.77	0.94	33.4	2.7	0.61	0.8	0.98	30.4	3.07	0.62	0.83	1
	1440	40.5	2.13	0.63	0.81	0.99	37.7	2.41	0.64	0.84	1	34.8	2.71	0.65	0.87	1	31.6	3.08	0.66	0.9	1
71°F	960	39.5	2.12	0.41	0.54	0.67	36.8	2.4	0.4	0.55	0.68	34.1	2.71	0.4	0.55	0.7	31	3.07	0.39	0.56	0.72
	1200	41.5	2.14	0.43	0.58	0.73	38.9	2.41	0.42	0.59	0.75	35.9	2.72	0.42	0.6	0.77	32.7	3.08	0.42	0.61	0.8
	1440	43.1	2.15	0.45	0.62	0.79	40.2	2.41	0.45	0.63	0.81	37.1	2.73	0.44	0.65	0.84	33.7	3.09	0.44	0.67	0.88

3 TON HEATING STANDARD EFFICIENCY KHB036S4

Indoor Coil Air Volume 70°F Dry Bulb cfm	Air Temperature Entering Outdoor Coil									
	65°F		45°F		25°F		5°F		-15°F	
	Total Heating Capacity	Comp. Motor Input Input	Total Heating Capacity	Comp. Motor Input Input	Total Heating Capacity	Comp. Motor Input Input	Total Heating Capacity	Comp. Motor Input Input	Total Heating Capacity	Comp. Motor Input Input
	kBtuh	kW	kBtuh	kW	kBtuh	kW	kBtuh	kW	kBtuh	kW
960	45.2	2.61	34.5	2.45	23.3	2.28	15.4	2.03	7.7	1.52
1200	45.8	2.45	35.1	2.28	23.9	2.12	16	1.86	8.3	1.36
1440	46.4	2.35	35.6	2.18	24.5	2.02	16.5	1.77	8.9	1.26

4 TON COOLING STANDARD EFFICIENCY KHB048S4

Entering Wet Bulb Temperature	Total Air Volume	Outdoor Air Temperature Entering Outdoor Coil																			
		85°F					95°F					105°F					115°F				
		Total Cool Cap.	Comp. Motor Input	Sensible To Total Ratio (S/T) Dry Bulb			Total Cool Cap.	Comp. Motor Input	Sensible To Total Ratio (S/T) Dry Bulb			Total Cool Cap.	Comp. Motor Input	Sensible To Total Ratio (S/T) Dry Bulb			Total Cool Cap.	Comp. Motor Input	Sensible To Total Ratio (S/T) Dry Bulb		
	cfm	kBtuh	kW	75°F	80°F	85°F	kBtuh	kW	75°F	80°F	85°F	kBtuh	kW	75°F	80°F	85°F	kBtuh	kW	75°F	80°F	85°F
63°F	1280	46	2.86	0.71	0.86	1	42.2	3.25	0.71	0.88	1	38.2	3.69	0.72	0.91	1	33.9	4.21	0.74	0.95	1
	1600	49.1	2.87	0.77	0.95	1	45	3.26	0.79	0.98	1	41.1	3.71	0.81	1	1	37.1	4.23	0.83	1	1
	1920	51.9	2.88	0.84	1	1	48	3.27	0.86	1	1	44.2	3.73	0.88	1	1	40	4.26	0.93	1	1
67°F	1280	49.4	2.87	0.54	0.68	0.83	45.4	3.26	0.54	0.69	0.85	41.2	3.71	0.53	0.7	0.87	36.9	4.23	0.53	0.72	0.91
	1600	52.5	2.89	0.58	0.75	0.92	48.2	3.27	0.58	0.77	0.95	44	3.73	0.58	0.79	0.98	39.3	4.24	0.59	0.81	1
	1920	54.8	2.9	0.62	0.82	0.99	50.4	3.29	0.63	0.84	1	45.8	3.74	0.63	0.86	1	41	4.26	0.65	0.9	1
71°F	1280	53	2.88	0.39	0.53	0.66	48.8	3.27	0.38	0.53	0.67	44.6	3.73	0.36	0.52	0.68	40.1	4.25	0.34	0.52	0.7
	1600	56.1	2.9	0.42	0.58	0.73	51.7	3.29	0.4	0.58	0.75	47.4	3.75	0.39	0.58	0.77	42.4	4.27	0.37	0.59	0.79
	1920	58.4	2.92	0.44	0.62	0.8	53.9	3.31	0.43	0.63	0.82	49.1	3.76	0.42	0.63	0.84	43.9	4.29	0.4	0.65	0.88

4 TON HEATING STANDARD EFFICIENCY KHB048S4

Indoor Coil Air Volume 70°F Dry Bulb cfm	Air Temperature Entering Outdoor Coil									
	65°F		45°F		25°F		5°F		-15°F	
	Total Heating Capacity	Comp. Motor Input Input	Total Heating Capacity	Comp. Motor Input Input	Total Heating Capacity	Comp. Motor Input Input	Total Heating Capacity	Comp. Motor Input Input	Total Heating Capacity	Comp. Motor Input Input
	kBtuh	kW	kBtuh	kW	kBtuh	kW	kBtuh	kW	kBtuh	kW
1280	60	3.34	46.3	3.19	32	3.04	21.6	2.76	10.6	2.06
1600	61.1	3.11	47.4	2.96	33.1	2.81	22.7	2.53	11.7	1.83
1920	61.9	2.96	48.2	2.81	34	2.66	23.5	2.37	12.6	1.67

COOLING / HEATING RATINGS - KHB

NOTE − For Temperatures and Capacities not shown in tables, see bulletin − Cooling Unit Rating Table Correction Factor Data in Miscellaneous Engineering Data section.

5 TON COOLING STANDARD EFFICIENCY KHB060S4

Entering Wet Bulb Temperature	Total Air Volume	Outdoor Air Temperature Entering Outdoor Coil																			
		85°F					95°F					105°F					115°F				
		Total Cool Cap.	Comp. Motor Input	Sensible To Total Ratio (S/T) Dry Bulb			Total Cool Cap.	Comp. Motor Input	Sensible To Total Ratio (S/T) Dry Bulb			Total Cool Cap.	Comp. Motor Input	Sensible To Total Ratio (S/T) Dry Bulb			Total Cool Cap.	Comp. Motor Input	Sensible To Total Ratio (S/T) Dry Bulb		
	cfm	kBtuh	kW	75°F	80°F	85°F	kBtuh	kW	75°F	80°F	85°F	kBtuh	kW	75°F	80°F	85°F	kBtuh	kW	75°F	80°F	85°F
63°F	1600	59.2	3.45	0.69	0.86	1	54.8	3.89	0.7	0.88	1	50.2	4.42	0.71	0.92	1	45.4	5.05	0.73	0.96	1
	2000	62.6	3.46	0.75	0.96	1	58.3	3.91	0.77	0.99	1	53.7	4.44	0.8	1	1	49.2	5.09	0.82	1	1
	2400	65.9	3.48	0.82	1	1	61.8	3.93	0.84	1	1	57.3	4.47	0.88	1	1	52.5	5.12	0.93	1	1
67°F	1600	63.7	3.47	0.53	0.67	0.81	59.1	3.92	0.53	0.68	0.83	54.3	4.45	0.53	0.69	0.87	49.3	5.09	0.54	0.71	0.92
	2000	67	3.49	0.57	0.73	0.91	62.4	3.94	0.58	0.75	0.94	57.3	4.47	0.58	0.77	0.99	51.7	5.11	0.59	0.8	1
	2400	69.7	3.5	0.61	0.8	1	64.6	3.95	0.61	0.82	1	59.4	4.49	0.63	0.86	1	53.5	5.12	0.64	0.9	1
71°F	1600	68.2	3.49	0.39	0.52	0.65	63.6	3.94	0.38	0.52	0.65	58.6	4.48	0.37	0.52	0.67	53.3	5.12	0.36	0.53	0.69
	2000	71.8	3.51	0.41	0.56	0.7	66.9	3.96	0.4	0.57	0.72	61.5	4.5	0.4	0.58	0.75	55.8	5.15	0.39	0.59	0.78
	2400	74.4	3.52	0.43	0.6	0.77	69.1	3.98	0.42	0.61	0.8	63.7	4.52	0.42	0.62	0.83	57.6	5.16	0.42	0.64	0.88

5 TON HEATING STANDARD EFFICIENCY KHB060S4

Indoor Coil Air Volume 70°F Dry Bulb cfm	Air Temperature Entering Outdoor Coil									
	65°F		45°F		25°F		5°F		-15°F	
	Total Heating Capacity	Comp. Motor Input Input	Total Heating Capacity	Comp. Motor Input Input	Total Heating Capacity	Comp. Motor Input Input	Total Heating Capacity	Comp. Motor Input Input	Total Heating Capacity	Comp. Motor Input Input
	kBtuh	kW	kBtuh	kW	kBtuh	kW	kBtuh	kW	kBtuh	kW
1600	71.6	3.92	55.2	3.68	38.4	3.43	25.3	3.08	12.8	2.31
2000	72.3	3.66	55.9	3.42	39	3.17	26	2.82	13.5	2.05
2400	73.5	3.5	57.1	3.26	40.2	3.02	27.2	2.66	14.7	1.89

6 TON COOLING STANDARD EFFICIENCY KGB074S4 (1ST STAGE)

Entering Wet Bulb Temperature	Total Air Volume	Outdoor Air Temperature Entering Outdoor Coil																			
		65°F					75°F					85°F					95°F				
		Total Cool Cap.	Comp. Motor Input	Sensible To Total Ratio (S/T) Dry Bulb			Total Cool Cap.	Comp. Motor Input	Sensible To Total Ratio (S/T) Dry Bulb			Total Cool Cap.	Comp. Motor Input	Sensible To Total Ratio (S/T) Dry Bulb			Total Cool Cap.	Comp. Motor Input	Sensible To Total Ratio (S/T) Dry Bulb		
	cfm	kBtuh	kW	75°F	80°F	85°F	kBtuh	kW	75°F	80°F	85°F	kBtuh	kW	75°F	80°F	85°F	kBtuh	kW	75°F	80°F	85°F
63°F	1200	52.1	2.23	0.7	0.81	0.92	49.9	2.55	0.7	0.82	0.94	47.4	2.9	0.7	0.83	0.96	44.7	3.33	0.72	0.85	0.98
	1600	56.6	2.22	0.74	0.88	1	54.2	2.54	0.75	0.9	1	51.5	2.9	0.77	0.92	1	48.5	3.32	0.78	0.95	1
	2000	59.9	2.2	0.8	0.95	1	57.3	2.52	0.81	0.97	1	54.5	2.89	0.83	0.99	1	51.6	3.3	0.85	1	1
67°F	1200	55.8	2.22	0.55	0.67	0.77	53.5	2.54	0.55	0.67	0.78	51	2.9	0.56	0.68	0.79	48.2	3.32	0.56	0.69	0.81
	1600	60.5	2.2	0.58	0.72	0.85	57.9	2.52	0.59	0.73	0.86	55.1	2.89	0.59	0.74	0.88	52	3.3	0.6	0.76	0.91
	2000	63.8	2.19	0.62	0.77	0.92	61	2.51	0.63	0.79	0.94	58	2.88	0.63	0.8	0.96	54.5	3.29	0.64	0.82	0.99
71°F	1200	59.9	2.21	0.43	0.53	0.64	57.4	2.52	0.43	0.54	0.65	54.7	2.88	0.42	0.54	0.65	51.7	3.3	0.42	0.54	0.66
	1600	64.8	2.18	0.45	0.57	0.7	61.9	2.5	0.44	0.57	0.7	59	2.87	0.44	0.58	0.71	55.7	3.29	0.43	0.59	0.73
	2000	68.2	2.16	0.45	0.6	0.75	65.2	2.49	0.45	0.61	0.76	61.9	2.86	0.46	0.62	0.78	58.4	3.28	0.46	0.63	0.8

6 TON COOLING STANDARD EFFICIENCY KGB074S4 (2ND STAGE)

Entering Wet Bulb Temperature	Total Air Volume	Outdoor Air Temperature Entering Outdoor Coil																			
		85°F					95°F					105°F					115°F				
		Total Cool Cap.	Comp. Motor Input	Sensible To Total Ratio (S/T) Dry Bulb			Total Cool Cap.	Comp. Motor Input	Sensible To Total Ratio (S/T) Dry Bulb			Total Cool Cap.	Comp. Motor Input	Sensible To Total Ratio (S/T) Dry Bulb			Total Cool Cap.	Comp. Motor Input	Sensible To Total Ratio (S/T) Dry Bulb		
	cfm	kBtuh	kW	75°F	80°F	85°F	kBtuh	kW	75°F	80°F	85°F	kBtuh	kW	75°F	80°F	85°F	kBtuh	kW	75°F	80°F	85°F
63°F	1920	66.8	4.21	0.75	0.89	1	63.1	4.77	0.76	0.91	1	59.3	5.42	0.77	0.93	1	55.1	6.17	0.8	0.97	1
	2400	70.3	4.24	0.8	0.96	1	66.4	4.8	0.82	0.98	1	62.5	5.44	0.84	1	1	58.7	6.19	0.87	1	1
	2880	73.4	4.26	0.85	1	1	69.8	4.82	0.88	1	1	66	5.47	0.9	1	1	61.9	6.22	0.94	1	1
67°F	1920	71.1	4.24	0.58	0.72	0.85	67.1	4.8	0.59	0.73	0.87	63.1	5.45	0.59	0.75	0.9	58.7	6.2	0.61	0.77	0.93
	2400	74.6	4.27	0.62	0.78	0.93	70.5	4.83	0.63	0.8	0.95	66	5.47	0.64	0.82	0.98	61.3	6.21	0.65	0.85	1
	2880	77	4.29	0.65	0.84	0.99	72.6	4.85	0.67	0.86	1	68.1	5.49	0.68	0.88	1	63.1	6.22	0.7	0.92	1
71°F	1920	75.5	4.27	0.44	0.57	0.7	71.5	4.83	0.44	0.58	0.71	67.1	5.47	0.44	0.58	0.73	62.5	6.23	0.43	0.59	0.75
	2400	79	4.3	0.45	0.61	0.75	74.6	4.87	0.45	0.61	0.77	70.1	5.51	0.45	0.63	0.8	65.3	6.25	0.46	0.64	0.82
	2880	81.5	4.33	0.47	0.64	0.81	77.1	4.89	0.47	0.66	0.83	72.3	5.53	0.47	0.67	0.86	67.2	6.25	0.48	0.69	0.89

6 TON HEATING STANDARD EFFICIENCY KHB074S4

Indoor Coil Air Volume 70°F Dry Bulb cfm	Air Temperature Entering Outdoor Coil									
	65°F		45°F		25°F		5°F		-15°F	
	Total Heating Capacity	Comp. Motor Input Input	Total Heating Capacity	Comp. Motor Input Input	Total Heating Capacity	Comp. Motor Input Input	Total Heating Capacity	Comp. Motor Input Input	Total Heating Capacity	Comp. Motor Input Input
	kBtuh	kW	kBtuh	kW	kBtuh	kW	kBtuh	kW	kBtuh	kW
1920	84.3	5.21	68.2	4.85	52.1	4.49	34.9	3.99	17.0	3.00
2400	85.8	4.86	69.6	4.51	53.6	4.15	36.4	3.65	18.5	2.66
2880	86.9	4.65	70.7	4.29	54.7	3.94	37.5	3.43	19.6	2.44

COOLING / HEATING RATINGS - KHA

NOTE − For Temperatures and Capacities not shown in tables, see bulletin − Cooling Unit Rating Table Correction Factor Data in Miscellaneous Engineering Data section.

3 TON COOLING STANDARD EFFICIENCY KHA036S4

Entering Wet Bulb Temperature	Total Air Volume	Outdoor Air Temperature Entering Outdoor Coil																			
		85°F					95°F					105°F					115°F				
		Total Cool Cap.	Comp. Motor Input	Sensible To Total Ratio (S/T) Dry Bulb			Total Cool Cap.	Comp. Motor Input	Sensible To Total Ratio (S/T) Dry Bulb			Total Cool Cap.	Comp. Motor Input	Sensible To Total Ratio (S/T) Dry Bulb			Total Cool Cap.	Comp. Motor Input	Sensible To Total Ratio (S/T) Dry Bulb		
	cfm	kBtuh	kW	75°F	80°F	85°F	kBtuh	kW	75°F	80°F	85°F	kBtuh	kW	75°F	80°F	85°F	kBtuh	kW	75°F	80°F	85°F
63°F	960	35.4	2.25	0.7	0.85	0.99	33	2.56	0.71	0.87	1	30.4	2.9	0.73	0.9	1	27.7	3.31	0.75	0.94	1
	1200	37.7	2.27	0.76	0.93	1	35	2.57	0.78	0.96	1	32.3	2.91	0.8	0.99	1	29.6	3.31	0.83	1	1
	1440	39.3	2.28	0.82	1	1	36.9	2.58	0.84	1	1	34.3	2.93	0.87	1	1	31.6	3.33	0.9	1	1
67°F	960	37.9	2.27	0.55	0.68	0.82	35.4	2.57	0.55	0.69	0.83	32.7	2.92	0.55	0.71	0.86	29.7	3.32	0.55	0.72	0.9
	1200	39.9	2.28	0.58	0.74	0.9	37.2	2.58	0.59	0.76	0.93	34.4	2.93	0.59	0.77	0.96	31.3	3.33	0.6	0.8	0.99
	1440	41.4	2.29	0.62	0.8	0.97	38.7	2.59	0.62	0.82	1	35.8	2.94	0.64	0.84	1	32.6	3.34	0.65	0.88	1
71°F	960	40.2	2.28	0.41	0.54	0.66	37.7	2.58	0.4	0.54	0.67	34.9	2.93	0.39	0.54	0.68	32	3.33	0.39	0.55	0.7
	1200	42.4	2.3	0.43	0.57	0.72	39.7	2.6	0.42	0.58	0.73	36.8	2.95	0.42	0.59	0.75	33.6	3.34	0.41	0.6	0.78
	1440	44	2.31	0.44	0.61	0.77	41.1	2.61	0.44	0.62	0.79	38.1	2.96	0.43	0.63	0.82	34.7	3.35	0.43	0.65	0.86

3 TON HEATING STANDARD EFFICIENCY KHA036S4

Indoor Coil Air Volume 70°F Dry Bulb cfm	Air Temperature Entering Outdoor Coil									
	65°F		45°F		25°F		5°F		-15°F	
	Total Heating Capacity	Comp. Motor Input Input	Total Heating Capacity	Comp. Motor Input Input	Total Heating Capacity	Comp. Motor Input Input	Total Heating Capacity	Comp. Motor Input Input	Total Heating Capacity	Comp. Motor Input Input
	kBtuh	kW	kBtuh	kW	kBtuh	kW	kBtuh	kW	kBtuh	kW
960	44.3	2.62	33.6	2.44	22.2	2.26	15.7	2.05	7.70	1.54
1200	45.3	2.45	34.6	2.27	23.2	2.09	16.7	1.88	8.70	1.37
1440	46.1	2.34	35.4	2.17	24	1.98	17.5	1.77	9.50	1.26

4 TON COOLING STANDARD EFFICIENCY KHA048S4

Entering Wet Bulb Temperature	Total Air Volume	Outdoor Air Temperature Entering Outdoor Coil																			
		85°F					95°F					105°F					115°F				
		Total Cool Cap.	Comp. Motor Input	Sensible To Total Ratio (S/T) Dry Bulb			Total Cool Cap.	Comp. Motor Input	Sensible To Total Ratio (S/T) Dry Bulb			Total Cool Cap.	Comp. Motor Input	Sensible To Total Ratio (S/T) Dry Bulb			Total Cool Cap.	Comp. Motor Input	Sensible To Total Ratio (S/T) Dry Bulb		
	cfm	kBtuh	kW	75°F	80°F	85°F	kBtuh	kW	75°F	80°F	85°F	kBtuh	kW	75°F	80°F	85°F	kBtuh	kW	75°F	80°F	85°F
63°F	1280	46.9	3.08	0.71	0.86	1	43.1	3.5	0.71	0.88	1	39.2	3.97	0.73	0.91	1	35.1	4.5	0.74	0.95	1
	1600	49.9	3.1	0.77	0.94	1	45.9	3.52	0.78	0.97	1	41.7	3.99	0.81	1	1	37.7	4.52	0.83	1	1
	1920	52.2	3.1	0.83	1	1	48.4	3.54	0.85	1	1	44.4	4.01	0.88	1	1	40.4	4.55	0.91	1	1
67°F	1280	50.5	3.1	0.55	0.69	0.83	46.4	3.52	0.54	0.69	0.85	42.3	3.99	0.54	0.7	0.87	37.9	4.53	0.53	0.72	0.91
	1600	53.2	3.11	0.59	0.75	0.91	49	3.54	0.58	0.76	0.94	44.6	4.01	0.59	0.79	0.97	40.1	4.55	0.59	0.81	1
	1920	55.3	3.11	0.62	0.81	0.98	51	3.56	0.63	0.83	1	46.5	4.03	0.63	0.85	1	41.8	4.57	0.64	0.89	1
71°F	1280	53.9	3.11	0.4	0.54	0.67	49.8	3.55	0.39	0.53	0.67	45.6	4.02	0.38	0.53	0.69	41	4.55	0.36	0.53	0.7
	1600	56.9	3.12	0.42	0.58	0.73	52.5	3.56	0.41	0.58	0.74	48.1	4.04	0.4	0.59	0.76	43.3	4.58	0.39	0.59	0.79
	1920	59.1	3.12	0.44	0.62	0.79	54.5	3.58	0.43	0.62	0.81	49.8	4.05	0.42	0.63	0.83	44.7	4.59	0.41	0.64	0.87

4 TON HEATING STANDARD EFFICIENCY KHA048S4

Indoor Coil Air Volume 70°F Dry Bulb cfm	Air Temperature Entering Outdoor Coil									
	65°F		45°F		25°F		5°F		-15°F	
	Total Heating Capacity	Comp. Motor Input Input	Total Heating Capacity	Comp. Motor Input Input	Total Heating Capacity	Comp. Motor Input Input	Total Heating Capacity	Comp. Motor Input Input	Total Heating Capacity	Comp. Motor Input Input
	kBtuh	kW	kBtuh	kW	kBtuh	kW	kBtuh	kW	kBtuh	kW
1280	58.0	3.58	44.2	3.30	29.3	3.00	21.4	2.69	10.50	2.02
1600	59.1	3.36	45.3	3.08	30.4	2.78	22.5	2.47	11.60	1.80
1920	60.1	3.23	46.3	2.95	31.4	2.65	23.5	2.34	12.60	1.67

COOLING / HEATING RATINGS - KHA

NOTE − For Temperatures and Capacities not shown in tables, see bulletin − Cooling Unit Rating Table Correction Factor Data in Miscellaneous Engineering Data section.

5 TON COOLING STANDARD EFFICIENCY KHA060S4

Entering Wet Bulb Temper-ature	Total Air Volume	Outdoor Air Temperature Entering Outdoor Coil																			
		85°F					95°F					105°F					115°F				
		Total Cool Cap.	Comp. Motor Input	Sensible To Total Ratio (S/T) Dry Bulb			Total Cool Cap.	Comp. Motor Input	Sensible To Total Ratio (S/T) Dry Bulb			Total Cool Cap.	Comp. Motor Input	Sensible To Total Ratio (S/T) Dry Bulb			Total Cool Cap.	Comp. Motor Input	Sensible To Total Ratio (S/T) Dry Bulb		
	cfm	kBtuh	kW	75°F	80°F	85°F	kBtuh	kW	75°F	80°F	85°F	kBtuh	kW	75°F	80°F	85°F	kBtuh	kW	75°F	80°F	85°F
63°F	1600	58.6	3.65	0.7	0.85	0.99	53.9	4.12	0.71	0.87	1	49	4.67	0.72	0.9	1	43.7	5.29	0.74	0.94	1
	2000	62.4	3.68	0.76	0.93	1	57.4	4.15	0.77	0.96	1	52.2	4.69	0.8	0.99	1	47	5.31	0.82	1	1
	2400	65.4	3.7	0.82	1	1	60.5	4.18	0.84	1	1	55.7	4.73	0.87	1	1	50.4	5.35	0.9	1	1
67°F	1600	63.2	3.68	0.54	0.68	0.82	58.3	4.16	0.54	0.69	0.83	53.1	4.7	0.53	0.7	0.86	47.4	5.32	0.53	0.72	0.9
	2000	66.8	3.71	0.58	0.74	0.9	61.5	4.19	0.58	0.75	0.93	56.1	4.73	0.58	0.77	0.96	50.1	5.35	0.59	0.8	1
	2400	69.4	3.73	0.62	0.8	0.97	63.9	4.21	0.62	0.82	1	58.2	4.75	0.62	0.84	1	52.1	5.37	0.64	0.88	1
71°F	1600	67.8	3.72	0.4	0.53	0.66	62.6	4.19	0.39	0.53	0.67	57.2	4.74	0.37	0.53	0.68	51.4	5.36	0.35	0.52	0.7
	2000	71.5	3.75	0.42	0.57	0.72	66	4.23	0.41	0.57	0.73	60.2	4.76	0.4	0.58	0.75	54.1	5.39	0.38	0.59	0.78
	2400	74.1	3.78	0.44	0.61	0.78	68.4	4.25	0.43	0.62	0.8	62.4	4.79	0.42	0.62	0.82	55.9	5.4	0.41	0.64	0.86

5 TON HEATING STANDARD EFFICIENCY KHA060S4

Indoor Coil Air Volume 70°F Dry Bulb cfm	Air Temperature Entering Outdoor Coil									
	65°F		45°F		25°F		5°F		-15°F	
	Total Heating Capacity	Comp. Motor Input Input	Total Heating Capacity	Comp. Motor Input Input	Total Heating Capacity	Comp. Motor Input Input	Total Heating Capacity	Comp. Motor Input Input	Total Heating Capacity	Comp. Motor Input Input
	kBtuh	kW	kBtuh	kW	kBtuh	kW	kBtuh	kW	kBtuh	kW
1600	74.6	4.19	56.5	3.92	37.4	3.65	25.7	3.24	12.70	2.43
2000	76.0	3.92	57.9	3.65	38.8	3.38	27.1	2.97	14.10	2.16
2400	77.5	3.75	59.4	3.48	40.3	3.21	28.6	2.80	15.60	1.99

6 TON COOLING STANDARD EFFICIENCY KHA072S4

Entering Wet Bulb Temper-ature	Total Air Volume	Outdoor Air Temperature Entering Outdoor Coil																			
		85°F					95°F					105°F					115°F				
		Total Cool Cap.	Comp. Motor Input	Sensible To Total Ratio (S/T) Dry Bulb			Total Cool Cap.	Comp. Motor Input	Sensible To Total Ratio (S/T) Dry Bulb			Total Cool Cap.	Comp. Motor Input	Sensible To Total Ratio (S/T) Dry Bulb			Total Cool Cap.	Comp. Motor Input	Sensible To Total Ratio (S/T) Dry Bulb		
	cfm	kBtuh	kW	75°F	80°F	85°F	kBtuh	kW	75°F	80°F	85°F	kBtuh	kW	75°F	80°F	85°F	kBtuh	kW	75°F	80°F	85°F
63°F	1920	69.2	4.52	0.69	0.85	1	64.7	5.02	0.7	0.87	1	59.9	5.59	0.71	0.91	1	54.6	6.22	0.74	0.95	1
	2400	73.3	4.52	0.74	0.94	1	68.5	5.03	0.76	0.97	1	63.8	5.59	0.79	1	1	58.7	6.22	0.82	1	1
	2880	76.8	4.53	0.81	1	1	72.5	5.03	0.83	1	1	67.8	5.59	0.87	1	1	62.6	6.23	0.91	1	1
67°F	1920	74.3	4.53	0.53	0.67	0.81	69.5	5.03	0.54	0.68	0.83	64.5	5.59	0.54	0.69	0.86	58.9	6.23	0.54	0.71	0.9
	2400	78.3	4.53	0.57	0.72	0.9	73.3	5.03	0.58	0.74	0.94	67.8	5.59	0.58	0.76	0.97	62.1	6.23	0.59	0.79	1
	2880	81.2	4.54	0.6	0.79	0.98	76.1	5.03	0.61	0.81	1	70.4	5.59	0.62	0.84	1	64.1	6.22	0.64	0.88	1
71°F	1920	79.6	4.54	0.4	0.52	0.64	74.6	5.03	0.39	0.53	0.65	69.3	5.59	0.38	0.53	0.67	63.5	6.23	0.38	0.53	0.69
	2400	83.4	4.54	0.41	0.56	0.7	78.2	5.03	0.41	0.56	0.72	72.7	5.59	0.41	0.57	0.74	66.7	6.23	0.4	0.59	0.77
	2880	86.4	4.55	0.43	0.6	0.76	81.1	5.04	0.43	0.6	0.78	75.3	5.6	0.42	0.62	0.81	69	6.23	0.42	0.63	0.85

6 TON HEATING STANDARD EFFICIENCY KHA072S4

Indoor Coil Air Volume 70°F Dry Bulb cfm	Air Temperature Entering Outdoor Coil									
	65°F		45°F		25°F		5°F		-15°F	
	Total Heating Capacity	Comp. Motor Input Input	Total Heating Capacity	Comp. Motor Input Input	Total Heating Capacity	Comp. Motor Input Input	Total Heating Capacity	Comp. Motor Input Input	Total Heating Capacity	Comp. Motor Input Input
	kBtuh	kW	kBtuh	kW	kBtuh	kW	kBtuh	kW	kBtuh	kW
1920	87.4	5.55	66.5	4.89	45.3	4.18	27.8	3.70	13.50	2.82
2400	89.7	5.25	68.9	4.59	47.7	3.88	30.1	3.40	15.80	2.52
2880	91.3	5.07	70.5	4.41	49.3	3.70	31.7	3.21	17.40	2.33

BLOWER DATA - DIRECT DRIVE - KHB024-030

BLOWER TABLE INCLUDES RESISTANCE FOR BASE UNIT ONLY WITH DRY INDOOR COIL AND AIR FILTERS IN PLACE.

FOR ALL UNITS ADD:
1 - Any factory installed options air resistance (economizer, wet coil, etc.) See page 34.
2 - Any field installed accessories air resistance (electric heat, duct resistance, diffuser, etc.) See page 34.

External Static Pressure (in. w.g.)	Air Volume (cfm) at Various Blower Speeds					
	208 VOLTS			230 VOLTS		
	High	Medium	Low	High	Medium	Low
2 and 2.5 Ton Standard Efficiency (Downflow)						**KHB024S and KHB030S**
0.0	1199	928	838	1379	1085	877
0.1	1229	926	813	1409	1086	872
0.2	1206	928	782	1367	1094	850
0.3	1183	881	742	1350	1047	820
0.4	1159	843	686	1321	1009	783
0.5	1136	812	643	1282	981	762
0.6	1103	766	569	1242	921	705
0.7	1046	728	496	1195	888	625
0.8	953	648	432	1134	792	583
0.9	909	584	335	1037	738	492
1.0	783	465	247	926	592	411
2 and 2.5 Ton Standard Efficiency (Horizontal)						**KHB024S and KHB030S**
0.0	1152	909	801	1325	1063	838
0.1	1152	893	770	1321	1048	826
0.2	1136	866	734	1288	1021	798
0.3	1104	826	697	1260	982	771
0.4	1072	787	643	1222	942	734
0.5	1041	747	589	1175	903	698
0.6	1009	707	534	1137	850	662
0.7	946	654	467	1081	797	588
0.8	861	588	396	1024	718	535
0.9	798	508	319	911	642	468
1.0	715	443	237	846	564	394

BLOWER DATA - DIRECT DRIVE - KHA/KHB036, KHA048

BLOWER TABLE INCLUDES RESISTANCE FOR BASE UNIT ONLY WITH DRY INDOOR COIL AND AIR FILTERS IN PLACE.

FOR ALL UNITS ADD:
1 - Any factory installed options air resistance (economizer, wet coil, etc.) See page 34.
2 - Any field installed accessories air resistance (electric heat, duct resistance, diffuser, etc.) See page 34.

External Static Pressure (in. w.g.)	Air Volume (cfm) at Various Blower Speeds								
	208 VOLTS			230 VOLTS			460/575 VOLTS		
	High	Medium	Low	High	Medium	Low	High	Medium	Low
3 and 4 Ton Standard Efficiency (Downflow)									**KHA/KHB036S and KHA048S**
0.0	1938	1552	1119	2167	1772	1317	2136	1716	1212
0.1	1992	1586	1128	2167	1780	1315	2104	1728	1208
0.2	1915	1592	1137	2100	1792	1307	2052	1684	1197
0.3	1865	1536	1083	2043	1735	1266	1994	1647	1172
0.4	1813	1495	1033	1986	1678	1204	1918	1597	1134
0.5	1762	1444	976	1909	1621	1164	1861	1534	1096
0.6	1694	1391	899	1814	1535	1082	1765	1485	1059
0.7	1609	1331	817	1718	1478	1000	1689	1410	996
0.8	1471	1220	730	1603	1364	918	1613	1335	920
0.9	1368	1066	522	1488	1250	755	1498	1235	848
1.0	1108	869	402	1259	1021	640	1345	1036	763
3 and 4 Ton Standard Efficiency (Horizontal)									**KHA/KHB036S and KHA048S**
0.0	1862	1520	1070	2082	1736	1259	2085	1745	1247
0.1	1867	1530	1069	2031	1717	1246	2070	1744	1257
0.2	1804	1485	1067	1978	1672	1227	2016	1690	1225
0.3	1741	1440	1018	1907	1627	1190	1944	1643	1192
0.4	1677	1396	968	1837	1567	1128	1890	1596	1160
0.5	1614	1329	894	1749	1492	1066	1800	1533	1111
0.6	1550	1284	844	1660	1417	1016	1727	1455	1062
0.7	1455	1195	769	1554	1327	941	1655	1377	996
0.8	1329	1106	670	1448	1237	842	1511	1283	865
0.9	1202	927	496	1307	1087	718	1403	1190	784
1.0	1012	828	385	1150	973	613	1222	1002	670

BLOWER DATA - DIRECT DRIVE - KHB048

BLOWER TABLE INCLUDES RESISTANCE FOR BASE UNIT ONLY WITH DRY INDOOR COIL AND AIR FILTERS IN PLACE.

FOR ALL UNITS ADD:
1 - Any factory installed options air resistance (economizer, wet coil, etc.) See page 34.
2 - Any field installed accessories air resistance (electric heat, duct resistance, diffuser, etc.) See page 34.

External Static Pressure (in. w.g.)	Air Volume (cfm) at Various Blower Speeds								
	208 VOLTS			230 VOLTS			460/575 VOLTS		
	High	Medium	Low	High	Medium	Low	High	Medium	Low
4 Ton Standard Efficiency (Downflow)									**KHB048S**
0.0	1951	1542	1098	2139	1542	1271	2139	1542	1271
0.1	1918	1526	1081	2105	1526	1261	2105	1526	1261
0.2	1877	1508	1062	2054	1508	1238	2054	1508	1238
0.3	1814	1448	1026	1986	1448	1196	1986	1448	1196
0.4	1752	1407	990	1918	1407	1154	1918	1407	1154
0.5	1689	1347	936	1826	1347	1099	1826	1347	1099
0.6	1605	1286	864	1735	1286	1043	1735	1286	1043
0.7	1500	1206	774	1644	1206	932	1644	1206	932
0.8	1375	1085	- - -	1461	1085	- - -	1461	1085	- - -
0.9	1202	- - -	- - -	- - -	- - -	- - -	- - -	- - -	- - -
1.0	- - -	- - -	- - -	- - -	- - -	- - -	- - -	- - -	- - -
4 Ton Standard Efficiency (Horizontal)									**KHB048S**
0.0	1901	1506	1079	2072	1718	1249	2072	1718	1249
0.1	1855	1478	1069	2026	1686	1238	2026	1686	1238
0.2	1800	1458	1049	1969	1644	1206	1969	1644	1206
0.3	1744	1396	1012	1908	1601	1161	1908	1601	1161
0.4	1687	1346	936	1847	1530	1115	1847	1530	1115
0.5	1630	1296	886	1755	1460	1047	1755	1460	1047
0.6	1546	1222	811	1663	1403	1002	1663	1403	1002
0.7	1461	1147	735	1572	1290	910	1572	1290	910
0.8	1347	1073	660	1419	1205	820	1419	1205	820
0.9	1178	874	560	1296	1006	683	1296	1006	683
1.0	954	624	358	1129	- - -	496	1129	- - -	496

BLOWER DATA - BELT DRIVE - KHA/KHB036

BLOWER TABLE INCLUDES RESISTANCE FOR BASE UNIT ONLY WITH DRY INDOOR COIL AND AIR FILTERS IN PLACE.

FOR ALL UNITS ADD:
1 - Any factory installed options air resistance (economizer, wet coil, etc.).
2 - Any field installed accessories air resistance (duct resistance, diffuser, etc.).
See page 33 for blower motors and drives and page 34 for wet coil and options/accessory air resistance data.

DOWNFLOW

Air Volume cfm	External Static - in. w.g.															
	0.10		0.20		0.30		0.40		0.50		0.60		0.70		0.80	
	RPM	BHP	RPM	BHP	RPM	BHP	RPM	BHP	RPM	BHP	RPM	BHP	RPM	BHP	RPM	BHP
	Field Furnished						Kit A01									
900	486	0.12	554	0.16	623	0.20	695	0.22	767	0.23	836	0.25	897	0.28	953	0.30
1000	508	0.15	576	0.19	643	0.22	713	0.24	783	0.26	848	0.28	907	0.30	961	0.33
1100	533	0.18	599	0.22	665	0.25	733	0.27	800	0.28	863	0.31	919	0.34	971	0.36
1200	560	0.21	625	0.25	689	0.28	755	0.30	820	0.32	879	0.34	932	0.37	983	0.40
1300	591	0.24	654	0.28	716	0.31	779	0.33	841	0.35	897	0.38	948	0.41	996	0.44
1400	631	0.26	690	0.30	748	0.34	807	0.36	864	0.39	916	0.42	964	0.46	1011	0.49
1500	676	0.28	729	0.33	782	0.36	835	0.40	887	0.43	935	0.47	981	0.50	1028	0.54

Air Volume cfm	External Static - in. w.g.															
	0.90		1.00		1.10		1.20		1.30		1.40		1.50		1.60	
	RPM	BHP	RPM	BHP	RPM	BHP	RPM	BHP	RPM	BHP	RPM	BHP	RPM	BHP	RPM	BHP
	Kit A01		Kit A05													
900	1004	0.33	1055	0.35	1106	0.37	1152	0.40	1193	0.43	1232	0.46	1269	0.49	1305	0.52
1000	1011	0.36	1062	0.38	1111	0.41	1157	0.43	1199	0.47	1238	0.50	1276	0.53	1311	0.56
1100	1020	0.39	1070	0.41	1118	0.44	1163	0.47	1206	0.51	1245	0.54	1282	0.58	1318	0.61
1200	1031	0.43	1079	0.45	1127	0.48	1171	0.52	1213	0.55	1252	0.59	1289	0.62	1324	0.66
1300	1044	0.47	1091	0.49	1137	0.53	1181	0.56	1221	0.60	1259	0.64	1296	0.68	1330	0.71
1400	1058	0.51	1105	0.54	1150	0.57	1191	0.61	1231	0.65	1268	0.69	1303	0.73	1337	0.77
1500	1074	0.56	1120	0.59	1163	0.63	1203	0.67	1241	0.71	1277	0.75	1312	0.79	1345	0.82

HORIZONTAL

Air Volume cfm	External Static - in. w.g.															
	0.10		0.20		0.30		0.40		0.50		0.60		0.70		0.80	
	RPM	BHP	RPM	BHP	RPM	BHP	RPM	BHP	RPM	BHP	RPM	BHP	RPM	BHP	RPM	BHP
	Field Furnished						Kit A01									
900	485	0.11	554	0.14	627	0.16	703	0.18	780	0.21	841	0.23	888	0.27	935	0.30
1000	509	0.13	578	0.16	649	0.19	722	0.21	796	0.23	854	0.26	900	0.29	947	0.33
1100	537	0.16	605	0.19	674	0.21	744	0.24	813	0.26	868	0.29	913	0.33	959	0.36
1200	567	0.19	633	0.22	700	0.24	768	0.27	833	0.30	884	0.33	928	0.37	974	0.40
1300	599	0.22	664	0.25	729	0.28	793	0.30	853	0.33	902	0.37	945	0.41	990	0.44
1400	634	0.26	697	0.29	758	0.31	819	0.34	875	0.38	921	0.42	964	0.46	1008	0.49
1500	669	0.30	730	0.33	789	0.36	846	0.39	897	0.42	941	0.47	983	0.51	1028	0.54

Air Volume cfm	External Static - in. w.g.															
	0.90		1.00		1.10		1.20		1.30		1.40		1.50		1.60	
	RPM	BHP	RPM	BHP	RPM	BHP	RPM	BHP	RPM	BHP	RPM	BHP	RPM	BHP	RPM	BHP
	Kit A01		Kit A05													
900	986	0.32	1039	0.35	1090	0.37	1137	0.40	1177	0.43	1214	0.46	1248	0.49	1280	0.51
1000	997	0.35	1048	0.38	1098	0.41	1143	0.44	1184	0.47	1221	0.50	1255	0.53	1287	0.56
1100	1008	0.39	1059	0.41	1107	0.44	1150	0.47	1191	0.51	1228	0.54	1263	0.57	1295	0.60
1200	1022	0.43	1071	0.45	1117	0.48	1160	0.52	1200	0.55	1237	0.59	1271	0.62	1303	0.66
1300	1037	0.47	1085	0.50	1130	0.53	1171	0.57	1210	0.60	1246	0.64	1280	0.68	1312	0.71
1400	1054	0.52	1100	0.54	1144	0.58	1183	0.62	1221	0.66	1256	0.70	1290	0.73	1321	0.77
1500	1073	0.57	1117	0.60	1159	0.64	1197	0.67	1234	0.71	1268	0.75	1301	0.79	1332	0.83

BLOWER DATA - BELT DRIVE - KHA048

BLOWER TABLE INCLUDES RESISTANCE FOR BASE UNIT ONLY WITH DRY INDOOR COIL AND AIR FILTERS IN PLACE.

FOR ALL UNITS ADD:
1 - Any factory installed options air resistance (economizer, wet coil, etc.).
2 - Any field installed accessories air resistance (duct resistance, diffuser, etc.).
See page 33 for blower motors and drives and page 34 for wet coil and options/accessory air resistance data.

DOWNFLOW

Air Volume cfm	External Static - in. w.g.															
	0.10		0.20		0.30		0.40		0.50		0.60		0.70		0.80	
	RPM	BHP	RPM	BHP	RPM	BHP	RPM	BHP	RPM	BHP	RPM	BHP	RPM	BHP	RPM	BHP
	Field Furnished						Kit A02									
1200	560	0.21	625	0.25	689	0.28	755	0.30	820	0.32	879	0.34	932	0.37	983	0.40
1300	591	0.24	654	0.28	716	0.31	779	0.33	841	0.35	897	0.38	948	0.41	996	0.44
1400	631	0.26	690	0.30	748	0.34	807	0.36	864	0.39	916	0.42	964	0.46	1011	0.49
1500	675	0.28	729	0.33	782	0.36	835	0.40	887	0.43	935	0.47	981	0.50	1028	0.54
1600	718	0.31	766	0.35	814	0.40	862	0.44	910	0.48	955	0.52	1000	0.55	1046	0.59
1700	756	0.34	799	0.39	843	0.44	887	0.49	932	0.53	976	0.57	1020	0.61	1066	0.64
1800	787	0.40	828	0.45	870	0.50	912	0.55	955	0.59	999	0.63	1043	0.67	1089	0.70
1900	815	0.46	855	0.51	897	0.57	939	0.62	981	0.66	1024	0.69	1068	0.73	1113	0.76
2000	843	0.53	884	0.59	925	0.64	968	0.68	1009	0.72	1052	0.76	1095	0.79	1138	0.83

Air Volume cfm	External Static - in. w.g.															
	0.90		1.00		1.10		1.20		1.30		1.40		1.50		1.60	
	RPM	BHP	RPM	BHP	RPM	BHP	RPM	BHP	RPM	BHP	RPM	BHP	RPM	BHP	RPM	BHP
	Kit A02				Kit A06											
1200	1031	0.43	1079	0.45	1127	0.48	1171	0.52	1213	0.55	1252	0.59	1289	0.62	1324	0.66
1300	1044	0.47	1091	0.49	1137	0.53	1181	0.56	1221	0.60	1259	0.64	1296	0.68	1330	0.71
1400	1058	0.51	1105	0.54	1150	0.57	1191	0.61	1231	0.65	1268	0.69	1303	0.73	1337	0.77
1500	1074	0.56	1120	0.59	1163	0.63	1203	0.67	1241	0.71	1277	0.75	1312	0.79	1345	0.82
1600	1092	0.61	1137	0.65	1178	0.68	1216	0.72	1253	0.76	1288	0.80	1321	0.84	1354	0.88
1700	1112	0.67	1155	0.70	1193	0.75	1230	0.79	1265	0.83	1299	0.87	1332	0.91	1364	0.95
1800	1133	0.73	1174	0.77	1209	0.81	1244	0.85	1278	0.90	1311	0.94	1343	0.98	1375	1.02
1900	1156	0.80	1193	0.84	1226	0.89	1260	0.93	1293	0.97	1325	1.01	1356	1.06	1388	1.10
2000	1178	0.87	1213	0.92	1243	0.97	1275	1.02	1307	1.06	1339	1.10	1370	1.14	1402	1.18

HORIZONTAL

Air Volume cfm	External Static - in. w.g.															
	0.10		0.20		0.30		0.40		0.50		0.60		0.70		0.80	
	RPM	BHP	RPM	BHP	RPM	BHP	RPM	BHP	RPM	BHP	RPM	BHP	RPM	BHP	RPM	BHP
	Field Furnished						Kit A02									
1200	567	0.19	633	0.22	700	0.24	768	0.27	833	0.30	884	0.33	928	0.37	974	0.40
1300	599	0.22	664	0.25	729	0.28	793	0.30	853	0.33	902	0.37	945	0.41	990	0.44
1400	634	0.26	697	0.29	758	0.31	819	0.34	875	0.38	921	0.42	964	0.46	1008	0.49
1500	669	0.30	730	0.33	789	0.36	846	0.39	897	0.42	941	0.47	983	0.51	1028	0.54
1600	705	0.34	763	0.37	819	0.40	873	0.43	921	0.48	963	0.52	1004	0.56	1048	0.59
1700	741	0.38	796	0.41	850	0.45	900	0.49	945	0.53	985	0.58	1026	0.62	1070	0.65
1800	776	0.43	829	0.46	880	0.51	927	0.55	970	0.60	1009	0.64	1050	0.68	1093	0.71
1900	812	0.48	862	0.52	910	0.57	955	0.62	996	0.66	1035	0.71	1076	0.74	1118	0.78
2000	847	0.54	895	0.59	941	0.64	984	0.69	1023	0.74	1062	0.78	1103	0.81	1144	0.85

Air Volume cfm	External Static - in. w.g.															
	0.90		1.00		1.10		1.20		1.30		1.40		1.50		1.60	
	RPM	BHP	RPM	BHP	RPM	BHP	RPM	BHP	RPM	BHP	RPM	BHP	RPM	BHP	RPM	BHP
	Kit A02				Kit A06											
1200	1022	0.43	1071	0.45	1117	0.48	1160	0.52	1200	0.55	1237	0.59	1271	0.62	1303	0.66
1300	1037	0.47	1085	0.50	1130	0.53	1171	0.57	1210	0.60	1246	0.64	1280	0.68	1312	0.71
1400	1054	0.52	1100	0.54	1144	0.58	1183	0.62	1221	0.66	1256	0.70	1290	0.73	1321	0.77
1500	1073	0.57	1117	0.60	1159	0.64	1197	0.67	1234	0.71	1268	0.75	1301	0.79	1332	0.83
1600	1093	0.62	1136	0.66	1175	0.70	1212	0.74	1247	0.78	1281	0.82	1313	0.86	1344	0.90
1700	1114	0.68	1155	0.72	1192	0.76	1227	0.80	1262	0.85	1295	0.89	1327	0.93	1358	0.97
1800	1136	0.75	1175	0.79	1210	0.83	1245	0.88	1278	0.92	1311	0.97	1342	1.01	1373	1.05
1900	1159	0.82	1197	0.86	1229	0.92	1263	0.97	1296	1.01	1328	1.06	1359	1.10	1390	1.14
2000	1183	0.90	1218	0.95	1249	1.01	1282	1.06	1314	1.11	1346	1.15	1377	1.20	1408	1.24

BLOWER DATA - BELT DRIVE - KHB048

BLOWER TABLE INCLUDES RESISTANCE FOR BASE UNIT ONLY WITH DRY INDOOR COIL AND AIR FILTERS IN PLACE.

FOR ALL UNITS ADD:
1 - Any factory installed options air resistance (economizer, wet coil, etc.).
2 - Any field installed accessories air resistance (duct resistance, diffuser, etc.).
See page 33 for blower motors and drives and page 34 for wet coil and options/accessory air resistance data.

DOWNFLOW

Air Volume cfm	External Static - in. w.g.															
	0.10		0.20		0.30		0.40		0.50		0.60		0.70		0.80	
	RPM	BHP	RPM	BHP	RPM	BHP	RPM	BHP	RPM	BHP	RPM	BHP	RPM	BHP	RPM	BHP
	Field Furnished								Kit A02							
1200	527	0.18	584	0.21	643	0.25	702	0.28	779	0.30	860	0.30	927	0.31	973	0.34
1300	550	0.21	607	0.25	664	0.29	722	0.32	797	0.33	875	0.34	937	0.35	981	0.38
1400	574	0.25	630	0.29	687	0.32	744	0.35	817	0.37	890	0.38	949	0.39	991	0.42
1500	603	0.28	659	0.32	714	0.36	770	0.39	839	0.41	907	0.42	962	0.44	1002	0.47
1600	651	0.29	703	0.33	754	0.37	806	0.41	867	0.43	927	0.45	976	0.48	1014	0.51
1700	708	0.30	754	0.34	800	0.38	846	0.42	898	0.46	949	0.49	992	0.53	1028	0.57
1800	764	0.31	804	0.36	844	0.40	884	0.45	927	0.49	970	0.54	1008	0.58	1044	0.63
1900	812	0.34	847	0.39	881	0.44	916	0.49	953	0.54	990	0.59	1025	0.64	1061	0.69
2000	847	0.40	878	0.45	909	0.50	942	0.55	975	0.60	1009	0.66	1044	0.71	1079	0.76

Air Volume cfm	External Static - in. w.g.															
	0.90		1.00		1.10		1.20		1.30		1.40		1.50		1.60	
	RPM	BHP	RPM	BHP	RPM	BHP	RPM	BHP	RPM	BHP	RPM	BHP	RPM	BHP	RPM	BHP
	Kit A02						Kit A06									
1200	1008	0.38	1047	0.42	1089	0.46	1133	0.49	1180	0.53	1224	0.56	1261	0.60	- - -	- - -
1300	1017	0.42	1055	0.46	1097	0.5	1139	0.53	1184	0.57	1228	0.60	1264	0.63	1295	0.67
1400	1026	0.46	1065	0.50	1106	0.54	1147	0.57	1191	0.61	1233	0.64	1269	0.68	1300	0.71
1500	1038	0.51	1076	0.55	1117	0.59	1157	0.62	1199	0.65	1240	0.69	1275	0.72	1305	0.76
1600	1050	0.56	1089	0.60	1129	0.64	1168	0.67	1209	0.71	1249	0.74	1282	0.78	1312	0.82
1700	1065	0.61	1103	0.65	1142	0.69	1181	0.73	1221	0.76	1259	0.80	1292	0.83	1320	0.88
1800	1081	0.67	1118	0.71	1156	0.75	1194	0.79	1234	0.82	1271	0.86	1302	0.90	1330	0.94
1900	1098	0.73	1135	0.77	1172	0.81	1209	0.85	1248	0.88	1284	0.92	1314	0.97	1341	1.01
2000	1116	0.80	1152	0.84	1189	0.88	1226	0.92	1264	0.96	1299	1.00	1327	1.04	1353	1.09

HORIZONTAL

Air Volume cfm	External Static - in. w.g.															
	0.10		0.20		0.30		0.40		0.50		0.60		0.70		0.80	
	RPM	BHP	RPM	BHP	RPM	BHP	RPM	BHP	RPM	BHP	RPM	BHP	RPM	BHP	RPM	BHP
	Field Furnished								Kit A02							
1200	528	0.17	581	0.20	641	0.23	706	0.25	782	0.27	859	0.29	924	0.31	974	0.34
1300	556	0.21	609	0.24	669	0.26	731	0.29	804	0.31	877	0.33	938	0.35	985	0.38
1400	592	0.24	645	0.27	702	0.30	763	0.32	830	0.35	898	0.37	953	0.39	997	0.43
1500	641	0.26	692	0.29	746	0.33	801	0.36	862	0.38	921	0.41	970	0.44	1011	0.48
1600	696	0.28	743	0.32	792	0.35	842	0.39	894	0.42	945	0.45	988	0.49	1027	0.53
1700	750	0.31	792	0.35	836	0.39	880	0.43	924	0.47	968	0.51	1007	0.55	1043	0.59
1800	799	0.35	837	0.39	875	0.43	913	0.48	952	0.52	990	0.56	1026	0.61	1061	0.65
1900	840	0.40	873	0.45	907	0.49	941	0.54	976	0.58	1011	0.63	1045	0.67	1080	0.72
2000	873	0.47	903	0.51	934	0.56	966	0.60	998	0.65	1032	0.70	1066	0.75	1101	0.79

Air Volume cfm	External Static - in. w.g.															
	0.90		1.00		1.10		1.20		1.30		1.40		1.50		1.60	
	RPM	BHP	RPM	BHP	RPM	BHP	RPM	BHP	RPM	BHP	RPM	BHP	RPM	BHP	RPM	BHP
	Kit A02						Kit A06									
1200	1014	0.38	1052	0.42	1093	0.45	1135	0.48	1176	0.51	1217	0.54	1257	0.58	1296	0.61
1300	1023	0.42	1061	0.46	1102	0.50	1143	0.53	1184	0.56	1224	0.59	1263	0.62	1302	0.66
1400	1035	0.47	1073	0.51	1112	0.54	1153	0.57	1193	0.61	1232	0.64	1271	0.67	1309	0.71
1500	1048	0.52	1086	0.56	1125	0.59	1164	0.63	1204	0.66	1243	0.69	1280	0.73	1317	0.77
1600	1063	0.57	1100	0.61	1139	0.65	1178	0.68	1216	0.71	1254	0.75	1291	0.79	1326	0.83
1700	1079	0.63	1116	0.67	1154	0.71	1192	0.74	1230	0.78	1267	0.81	1302	0.85	1337	0.89
1800	1097	0.69	1133	0.73	1171	0.77	1209	0.80	1246	0.84	1281	0.88	1315	0.92	1349	0.96
1900	1116	0.76	1152	0.80	1189	0.84	1226	0.87	1262	0.91	1296	0.95	1329	0.99	1361	1.03
2000	1136	0.83	1172	0.87	1208	0.91	1245	0.94	1280	0.99	1313	1.03	1344	1.07	1375	1.11

BLOWER DATA - BELT DRIVE - KHA/KHB060

BLOWER TABLE INCLUDES RESISTANCE FOR BASE UNIT ONLY WITH DRY INDOOR COIL AND AIR FILTERS IN PLACE.

FOR ALL UNITS ADD:
1 - Any factory installed options air resistance (economizer, wet coil, etc.).
2 - Any field installed accessories air resistance (duct resistance, diffuser, etc.).
See page 33 for blower motors and drives and page 34 for wet coil and options/accessory air resistance data.

DOWNFLOW

Air Volume cfm	External Static - in. w.g.															
	0.10		0.20		0.30		0.40		0.50		0.60		0.70		0.80	
	RPM	BHP	RPM	BHP	RPM	BHP	RPM	BHP	RPM	BHP	RPM	BHP	RPM	BHP	RPM	BHP
	Field Furnished								Kit A03							
1600	665	0.30	716	0.34	768	0.38	819	0.41	879	0.44	937	0.46	985	0.49	1022	0.52
1700	723	0.31	768	0.35	814	0.39	860	0.43	910	0.47	959	0.50	1001	0.54	1037	0.58
1800	779	0.32	818	0.37	857	0.41	897	0.46	939	0.50	980	0.55	1018	0.59	1054	0.64
1900	826	0.36	859	0.41	894	0.45	928	0.50	964	0.56	1000	0.61	1036	0.66	1072	0.70
2000	857	0.42	889	0.47	920	0.52	952	0.57	986	0.62	1020	0.68	1055	0.73	1091	0.77
2100	878	0.49	909	0.54	940	0.59	973	0.64	1006	0.70	1041	0.75	1076	0.80	1112	0.85
2200	897	0.55	929	0.61	961	0.66	994	0.72	1028	0.78	1063	0.83	1099	0.89	1134	0.93
2300	918	0.62	950	0.68	983	0.74	1017	0.80	1052	0.86	1087	0.92	1122	0.97	1157	1.02
2400	941	0.70	974	0.77	1008	0.83	1042	0.90	1077	0.96	1111	1.01	1146	1.06	1181	1.11

Air Volume cfm	External Static - in. w.g.															
	0.90		1.00		1.10		1.20		1.30		1.40		1.50		1.60	
	RPM	BHP	RPM	BHP	RPM	BHP	RPM	BHP	RPM	BHP	RPM	BHP	RPM	BHP	RPM	BHP
	Kit A03										Kit A07					
1600	1059	0.57	1098	0.61	1138	0.65	1177	0.68	1218	0.71	1257	0.75	1290	0.79	1319	0.83
1700	1074	0.62	1113	0.66	1152	0.70	1190	0.74	1231	0.77	1268	0.80	1299	0.84	1328	0.89
1800	1091	0.68	1129	0.72	1167	0.76	1205	0.80	1244	0.83	1280	0.87	1310	0.91	1338	0.95
1900	1109	0.75	1146	0.79	1183	0.82	1221	0.86	1260	0.90	1294	0.94	1323	0.98	1349	1.02
2000	1128	0.82	1164	0.86	1201	0.89	1239	0.93	1276	0.97	1310	1.01	1336	1.06	1362	1.10
2100	1148	0.89	1185	0.93	1221	0.97	1258	1.01	1294	1.05	1325	1.09	1351	1.14	1376	1.19
2200	1170	0.97	1206	1.01	1242	1.05	1277	1.09	1311	1.14	1341	1.18	1365	1.23	1390	1.28
2300	1193	1.06	1228	1.09	1262	1.14	1295	1.19	1327	1.24	1355	1.29	1380	1.33	1406	1.37
2400	1216	1.15	1250	1.19	1282	1.24	1313	1.30	1343	1.36	1371	1.40	1396	1.44	1423	1.48

HORIZONTAL

Air Volume cfm	External Static - in. w.g.															
	0.10		0.20		0.30		0.40		0.50		0.60		0.70		0.80	
	RPM	BHP	RPM	BHP	RPM	BHP	RPM	BHP	RPM	BHP	RPM	BHP	RPM	BHP	RPM	BHP
	Field Furnished						Kit A03									
1600	712	0.29	758	0.32	807	0.36	855	0.39	906	0.43	955	0.46	997	0.50	1035	0.54
1700	766	0.32	808	0.36	850	0.40	892	0.44	936	0.47	978	0.51	1016	0.56	1052	0.60
1800	814	0.36	851	0.40	888	0.44	925	0.49	963	0.53	1000	0.57	1035	0.62	1071	0.66
1900	853	0.41	886	0.46	919	0.50	952	0.55	986	0.60	1021	0.64	1056	0.69	1091	0.73
2000	883	0.48	913	0.53	944	0.57	976	0.62	1009	0.67	1043	0.71	1078	0.76	1112	0.80
2100	906	0.56	936	0.60	967	0.65	999	0.70	1033	0.75	1067	0.79	1101	0.84	1135	0.88
2200	930	0.64	960	0.68	991	0.73	1024	0.78	1058	0.83	1092	0.88	1126	0.92	1160	0.96
2300	954	0.72	985	0.77	1017	0.82	1051	0.87	1085	0.92	1119	0.96	1152	1.00	1186	1.04
2400	981	0.81	1013	0.86	1046	0.91	1079	0.96	1113	1.00	1146	1.05	1180	1.09	1213	1.13

Air Volume cfm	External Static - in. w.g.															
	0.90		1.00		1.10		1.20		1.30		1.40		1.50		1.60	
	RPM	BHP	RPM	BHP	RPM	BHP	RPM	BHP	RPM	BHP	RPM	BHP	RPM	BHP	RPM	BHP
	Kit A03										Kit A07					
1600	1071	0.58	1109	0.62	1147	0.66	1186	0.69	1225	0.72	1263	0.76	1299	0.80	1334	0.83
1700	1088	0.64	1126	0.68	1164	0.72	1202	0.75	1240	0.78	1276	0.82	1311	0.86	1345	0.90
1800	1107	0.70	1143	0.74	1181	0.78	1219	0.81	1256	0.85	1291	0.89	1324	0.93	1357	0.97
1900	1126	0.77	1163	0.81	1200	0.85	1237	0.88	1273	0.92	1306	0.96	1339	1.00	1371	1.04
2000	1148	0.84	1183	0.88	1220	0.92	1257	0.96	1291	1.00	1323	1.04	1354	1.08	1385	1.12
2100	1170	0.92	1206	0.96	1242	1.00	1277	1.04	1310	1.08	1340	1.13	1371	1.17	1401	1.21
2200	1195	1.00	1230	1.04	1265	1.08	1299	1.13	1330	1.18	1359	1.23	1388	1.27	1418	1.31
2300	1220	1.08	1254	1.13	1288	1.17	1320	1.23	1350	1.28	1378	1.34	1406	1.38	1435	1.42
2400	1245	1.18	1278	1.22	1311	1.28	1341	1.33	1370	1.40	1397	1.45	1425	1.50	1454	1.54

BLOWER DATA - BELT DRIVE - DOWNFLOW - KHA072

BLOWER TABLE INCLUDES RESISTANCE FOR BASE UNIT ONLY WITH DRY INDOOR COIL AND AIR FILTERS IN PLACE.

FOR ALL UNITS ADD:
1 - Any factory installed options air resistance (economizer, wet coil, etc.).
2 - Any field installed accessories air resistance (duct resistance, diffuser, etc.).
See page 33 for blower motors and drives and page 34 for wet coil and options/accessory air resistance data.

Air Volume cfm	External Static - in. w.g.															
	0.10		0.20		0.30		0.40		0.50		0.60		0.70		0.80	
	RPM	BHP	RPM	BHP	RPM	BHP	RPM	BHP	RPM	BHP	RPM	BHP	RPM	BHP	RPM	BHP
	Field Furnished										Kit A04					
1900	826	0.36	859	0.41	894	0.45	928	0.50	964	0.56	1000	0.61	1036	0.66	1072	0.70
2000	857	0.42	889	0.47	920	0.52	952	0.57	986	0.62	1020	0.68	1055	0.73	1091	0.77
2100	878	0.49	909	0.54	940	0.59	973	0.64	1006	0.70	1041	0.75	1076	0.80	1112	0.85
2200	897	0.55	929	0.61	961	0.66	994	0.72	1028	0.78	1063	0.83	1099	0.89	1134	0.93
2300	918	0.62	950	0.68	983	0.74	1017	0.80	1052	0.86	1087	0.92	1122	0.97	1157	1.02
2400	941	0.70	974	0.77	1008	0.83	1042	0.90	1077	0.96	1111	1.01	1146	1.06	1181	1.11
2500	966	0.79	1000	0.86	1034	0.93	1068	1.00	1103	1.06	1137	1.11	1171	1.16	1205	1.20
2600	994	0.90	1028	0.97	1062	1.04	1096	1.10	1130	1.16	1164	1.21	1197	1.26	1231	1.30
2700	1023	1.01	1057	1.08	1091	1.15	1125	1.22	1159	1.27	1192	1.32	1225	1.37	1258	1.41
2800	1053	1.13	1088	1.21	1122	1.27	1155	1.33	1188	1.39	1221	1.43	1253	1.48	1286	1.53
2900	1085	1.26	1119	1.33	1153	1.40	1186	1.45	1218	1.51	1250	1.55	1281	1.61	1313	1.66

Air Volume cfm	External Static - in. w.g.															
	0.90		1.00		1.10		1.20		1.30		1.40		1.50		1.60	
	RPM	BHP	RPM	BHP	RPM	BHP	RPM	BHP	RPM	BHP	RPM	BHP	RPM	BHP	RPM	BHP
	Kit A04														Kit A08	
1900	1109	0.75	1146	0.79	1183	0.82	1221	0.86	1260	0.90	1294	0.94	1323	0.98	1349	1.02
2000	1128	0.82	1164	0.86	1201	0.89	1239	0.93	1276	0.97	1310	1.01	1336	1.06	1362	1.10
2100	1148	0.89	1185	0.93	1221	0.97	1258	1.01	1294	1.05	1325	1.09	1351	1.14	1376	1.19
2200	1170	0.97	1206	1.01	1242	1.05	1277	1.09	1311	1.14	1341	1.18	1365	1.23	1390	1.28
2300	1193	1.06	1228	1.09	1262	1.14	1295	1.19	1327	1.24	1355	1.29	1380	1.33	1406	1.37
2400	1216	1.15	1250	1.19	1282	1.24	1313	1.30	1343	1.36	1371	1.40	1396	1.44	1423	1.48
2500	1240	1.24	1273	1.29	1302	1.36	1331	1.42	1360	1.48	1388	1.52	1414	1.55	1441	1.58
2600	1265	1.34	1296	1.40	1324	1.47	1352	1.54	1381	1.60	1408	1.64	1434	1.67	1460	1.70
2700	1291	1.46	1321	1.52	1347	1.60	1374	1.67	1403	1.72	1429	1.76	1455	1.79	1481	1.82
2800	1317	1.58	1346	1.66	1372	1.74	1399	1.80	1426	1.85	1451	1.89	1477	1.92	1503	1.95
2900	1343	1.72	1371	1.80	1397	1.88	1424	1.95	1450	1.99	1475	2.02	1500	2.05	1526	2.08

BLOWER DATA - BELT DRIVE - HORIZONTAL - KHA072

BLOWER TABLE INCLUDES RESISTANCE FOR BASE UNIT ONLY WITH DRY INDOOR COIL AND AIR FILTERS IN PLACE.

FOR ALL UNITS ADD:
1 - Any factory installed options air resistance (economizer, wet coil, etc.).
2 - Any field installed accessories air resistance (duct resistance, diffuser, etc.).
See page 33 for blower motors and drives and page 34 for wet coil and options/accessory air resistance data.

Air Volume cfm	External Static - in. w.g.															
	0.10		0.20		0.30		0.40		0.50		0.60		0.70		0.80	
	RPM	BHP	RPM	BHP	RPM	BHP	RPM	BHP	RPM	BHP	RPM	BHP	RPM	BHP	RPM	BHP
	Field Furnished								Kit A04							
1900	853	0.41	886	0.46	919	0.50	952	0.55	986	0.60	1021	0.64	1056	0.69	1091	0.73
2000	883	0.48	913	0.53	944	0.57	976	0.62	1009	0.67	1043	0.71	1078	0.76	1112	0.80
2100	906	0.56	936	0.60	967	0.65	999	0.70	1033	0.75	1067	0.79	1101	0.84	1135	0.88
2200	930	0.64	960	0.68	991	0.73	1024	0.78	1058	0.83	1092	0.88	1126	0.92	1160	0.96
2300	954	0.72	985	0.77	1017	0.82	1051	0.87	1085	0.92	1119	0.96	1152	1.00	1186	1.04
2400	981	0.81	1013	0.86	1046	0.91	1079	0.96	1113	1.00	1146	1.05	1180	1.09	1213	1.13
2500	1010	0.91	1042	0.96	1075	1.00	1109	1.05	1142	1.09	1175	1.14	1207	1.18	1239	1.23
2600	1040	1.01	1073	1.05	1106	1.10	1139	1.14	1171	1.19	1203	1.23	1235	1.28	1266	1.33
2700	1072	1.10	1104	1.15	1137	1.20	1169	1.24	1201	1.29	1232	1.34	1263	1.40	1293	1.46
2800	1105	1.21	1137	1.25	1168	1.30	1200	1.35	1231	1.40	1261	1.46	1291	1.52	1321	1.59
2900	1138	1.32	1169	1.37	1200	1.42	1231	1.47	1261	1.53	1291	1.60	1321	1.66	1350	1.73

Air Volume cfm	External Static - in. w.g.															
	0.90		1.00		1.10		1.20		1.30		1.40		1.50		1.60	
	RPM	BHP	RPM	BHP	RPM	BHP	RPM	BHP	RPM	BHP	RPM	BHP	RPM	BHP	RPM	BHP
	Kit A04														Kit A08	
1900	1126	0.77	1163	0.81	1200	0.85	1237	0.88	1273	0.92	1306	0.96	1339	1.00	1371	1.04
2000	1148	0.84	1183	0.88	1220	0.92	1257	0.96	1291	1.00	1323	1.04	1354	1.08	1385	1.12
2100	1170	0.92	1206	0.96	1242	1.00	1277	1.04	1310	1.08	1340	1.13	1371	1.17	1401	1.21
2200	1195	1.00	1230	1.04	1265	1.08	1299	1.13	1330	1.18	1359	1.23	1388	1.27	1418	1.31
2300	1220	1.08	1254	1.13	1288	1.17	1320	1.23	1350	1.28	1378	1.34	1406	1.38	1435	1.42
2400	1245	1.18	1278	1.22	1311	1.28	1341	1.33	1370	1.40	1397	1.45	1425	1.50	1454	1.54
2500	1271	1.28	1303	1.33	1334	1.39	1363	1.45	1391	1.52	1418	1.57	1446	1.62	1474	1.66
2600	1297	1.39	1328	1.45	1357	1.52	1385	1.58	1412	1.64	1439	1.70	1467	1.74	1495	1.78
2700	1323	1.52	1353	1.58	1382	1.65	1409	1.72	1435	1.77	1462	1.82	1490	1.86	1517	1.90
2800	1351	1.65	1380	1.72	1407	1.78	1434	1.85	1460	1.90	1486	1.95	1513	1.99	1541	2.02
2900	1379	1.79	1407	1.86	1434	1.92	1460	1.98	1485	2.04	1511	2.08	1538	2.12	1565	2.15

BLOWER DATA - BELT DRIVE - DOWNFLOW - KHB074

BLOWER TABLE INCLUDES RESISTANCE FOR BASE UNIT ONLY WITH DRY INDOOR COIL AND AIR FILTERS IN PLACE.

FOR ALL UNITS ADD:
1 - Any factory installed options air resistance (economizer, wet coil, etc.).
2 - Any field installed accessories air resistance (duct resistance, diffuser, etc.).
See page 33 for blower motors and drives and page 34 for wet coil and options/accessory air resistance data.

Air Volume cfm	External Static - in. w.g.															
	0.10		0.20		0.30		0.40		0.50		0.60		0.70		0.80	
	RPM	BHP	RPM	BHP	RPM	BHP	RPM	BHP	RPM	BHP	RPM	BHP	RPM	BHP	RPM	BHP
	Field Furnished										Kit A04					
1900	826	0.36	859	0.41	894	0.45	928	0.50	964	0.56	1000	0.61	1036	0.66	1072	0.70
2000	857	0.42	889	0.47	920	0.52	952	0.57	986	0.62	1020	0.68	1055	0.73	1091	0.77
2100	878	0.49	909	0.54	940	0.59	973	0.64	1006	0.70	1041	0.75	1076	0.80	1112	0.85
2200	897	0.55	929	0.61	961	0.66	994	0.72	1028	0.78	1063	0.83	1099	0.89	1134	0.93
2300	918	0.62	950	0.68	983	0.74	1017	0.80	1052	0.86	1087	0.92	1122	0.97	1157	1.02
2400	941	0.70	974	0.77	1008	0.83	1042	0.90	1077	0.96	1111	1.01	1146	1.06	1181	1.11
2500	966	0.79	1000	0.86	1034	0.93	1068	1.00	1103	1.06	1137	1.11	1171	1.16	1205	1.20
2600	994	0.90	1028	0.97	1062	1.04	1096	1.10	1130	1.16	1164	1.21	1197	1.26	1231	1.30
2700	1023	1.01	1057	1.08	1091	1.15	1125	1.22	1159	1.27	1192	1.32	1225	1.37	1258	1.41
2800	1053	1.13	1088	1.21	1122	1.27	1155	1.33	1188	1.39	1221	1.43	1253	1.48	1286	1.53
2900	1085	1.26	1119	1.33	1153	1.40	1186	1.45	1218	1.51	1250	1.55	1281	1.61	1313	1.66

Air Volume cfm	External Static - in. w.g.															
	0.90		1.00		1.10		1.20		1.30		1.40		1.50		1.60	
	RPM	BHP	RPM	BHP	RPM	BHP	RPM	BHP	RPM	BHP	RPM	BHP	RPM	BHP	RPM	BHP
	Kit A04														Kit A08	
1900	1109	0.75	1146	0.79	1183	0.82	1221	0.86	1260	0.90	1294	0.94	1323	0.98	1349	1.02
2000	1128	0.82	1164	0.86	1201	0.89	1239	0.93	1276	0.97	1310	1.01	1336	1.06	1362	1.10
2100	1148	0.89	1185	0.93	1221	0.97	1258	1.01	1294	1.05	1325	1.09	1351	1.14	1376	1.19
2200	1170	0.97	1206	1.01	1242	1.05	1277	1.09	1311	1.14	1341	1.18	1365	1.23	1390	1.28
2300	1193	1.06	1228	1.09	1262	1.14	1295	1.19	1327	1.24	1355	1.29	1380	1.33	1406	1.37
2400	1216	1.15	1250	1.19	1282	1.24	1313	1.30	1343	1.36	1371	1.40	1396	1.44	1423	1.48
2500	1240	1.24	1273	1.29	1302	1.36	1331	1.42	1360	1.48	1388	1.52	1414	1.55	1441	1.58
2600	1265	1.34	1296	1.40	1324	1.47	1352	1.54	1381	1.60	1408	1.64	1434	1.67	1460	1.70
2700	1291	1.46	1321	1.52	1347	1.60	1374	1.67	1403	1.72	1429	1.76	1455	1.79	1481	1.82
2800	1317	1.58	1346	1.66	1372	1.74	1399	1.80	1426	1.85	1451	1.89	1477	1.92	1503	1.95
2900	1343	1.72	1371	1.80	1397	1.88	1424	1.95	1450	1.99	1475	2.02	1500	2.05	1526	2.08

BLOWER DATA - BELT DRIVE - HORIZONTAL - KHB074

BLOWER TABLE INCLUDES RESISTANCE FOR BASE UNIT ONLY WITH DRY INDOOR COIL AND AIR FILTERS IN PLACE.

FOR ALL UNITS ADD:
1 - Any factory installed options air resistance (economizer, wet coil, etc.).
2 - Any field installed accessories air resistance (duct resistance, diffuser, etc.).
See page 33 for blower motors and drives and page 34 for wet coil and options/accessory air resistance data.

Air Volume cfm	External Static - in. w.g.															
	0.10		0.20		0.30		0.40		0.50		0.60		0.70		0.80	
	RPM	BHP	RPM	BHP	RPM	BHP	RPM	BHP	RPM	BHP	RPM	BHP	RPM	BHP	RPM	BHP
	Field Furnished								Kit A04							
1900	853	0.41	886	0.46	919	0.50	952	0.55	986	0.60	1021	0.64	1056	0.69	1091	0.73
2000	883	0.48	913	0.53	944	0.57	976	0.62	1009	0.67	1043	0.71	1078	0.76	1112	0.80
2100	906	0.56	936	0.60	967	0.65	999	0.70	1033	0.75	1067	0.79	1101	0.84	1135	0.88
2200	930	0.64	960	0.68	991	0.73	1024	0.78	1058	0.83	1092	0.88	1126	0.92	1160	0.96
2300	954	0.72	985	0.77	1017	0.82	1051	0.87	1085	0.92	1119	0.96	1152	1.00	1186	1.04
2400	981	0.81	1013	0.86	1046	0.91	1079	0.96	1113	1.00	1146	1.05	1180	1.09	1213	1.13
2500	1010	0.91	1042	0.96	1075	1.00	1109	1.05	1142	1.09	1175	1.14	1207	1.18	1239	1.23
2600	1040	1.01	1073	1.05	1106	1.10	1139	1.14	1171	1.19	1203	1.23	1235	1.28	1266	1.33
2700	1072	1.10	1104	1.15	1137	1.20	1169	1.24	1201	1.29	1232	1.34	1263	1.40	1293	1.46
2800	1105	1.21	1137	1.25	1168	1.30	1200	1.35	1231	1.40	1261	1.46	1291	1.52	1321	1.59
2900	1138	1.32	1169	1.37	1200	1.42	1231	1.47	1261	1.53	1291	1.60	1321	1.66	1350	1.73

Air Volume cfm	External Static - in. w.g.															
	0.90		1.00		1.10		1.20		1.30		1.40		1.50		1.60	
	RPM	BHP	RPM	BHP	RPM	BHP	RPM	BHP	RPM	BHP	RPM	BHP	RPM	BHP	RPM	BHP
	Kit A04														Kit A08	
1900	1126	0.77	1163	0.81	1200	0.85	1237	0.88	1273	0.92	1306	0.96	1339	1.00	1371	1.04
2000	1148	0.84	1183	0.88	1220	0.92	1257	0.96	1291	1.00	1323	1.04	1354	1.08	1385	1.12
2100	1170	0.92	1206	0.96	1242	1.00	1277	1.04	1310	1.08	1340	1.13	1371	1.17	1401	1.21
2200	1195	1.00	1230	1.04	1265	1.08	1299	1.13	1330	1.18	1359	1.23	1388	1.27	1418	1.31
2300	1220	1.08	1254	1.13	1288	1.17	1320	1.23	1350	1.28	1378	1.34	1406	1.38	1435	1.42
2400	1245	1.18	1278	1.22	1311	1.28	1341	1.33	1370	1.40	1397	1.45	1425	1.50	1454	1.54
2500	1271	1.28	1303	1.33	1334	1.39	1363	1.45	1391	1.52	1418	1.57	1446	1.62	1474	1.66
2600	1297	1.39	1328	1.45	1357	1.52	1385	1.58	1412	1.64	1439	1.70	1467	1.74	1495	1.78
2700	1323	1.52	1353	1.58	1382	1.65	1409	1.72	1435	1.77	1462	1.82	1490	1.86	1517	1.90
2800	1351	1.65	1380	1.72	1407	1.78	1434	1.85	1460	1.90	1486	1.95	1513	1.99	1541	2.02
2900	1379	1.79	1407	1.86	1434	1.92	1460	1.98	1485	2.04	1511	2.08	1538	2.12	1565	2.15

BLOWER DATA

BELT DRIVE KIT SPECIFICATIONS - 036-074

Model No.	Motor HP		No. of Speeds	Drive Kits and RPM Range							
	Nominal	Maximum		A01	A02	A03	A04	A05	A06	A07	A08
036	0.75	0.86	1	673-1010	- - -	- - -	- - -	897-1346	- - -	- - -	- - -
	1	1.15	1	673-1010	- - -	- - -	- - -	897-1346	- - -	- - -	- - -
	1.5	1.7	1	673-1010	- - -	- - -	- - -	897-1346	- - -	- - -	- - -
	2	2.3	1	673-1010	- - -	- - -	- - -	897-1346	- - -	- - -	- - -
048	0.75	0.86	1	- - -	745-1117	- - -	- - -	- - -	1071-1429	- - -	- - -
	1	1.15	1	- - -	745-1117	- - -	- - -	- - -	1071-1429	- - -	- - -
	1.5	1.7	1	- - -	745-1117	- - -	- - -	- - -	1071-1429	- - -	- - -
	2	2.3	1	- - -	745-1117	- - -	- - -	- - -	1071-1429	- - -	- - -
060	0.75	0.86	1	- - -	- - -	833-1250	- - -	- - -	- - -	1212-1548	- - -
	1	1.15	1	- - -	- - -	833-1250	- - -	- - -	- - -	1212-1548	- - -
	1.5	1.7	1	- - -	- - -	833-1250	- - -	- - -	- - -	1212-1548	- - -
	2	2.3	1	- - -	- - -	833-1250	- - -	- - -	- - -	1212-1548	- - -
072	1	1.5	1	- - -	- - -	- - -	968-1340	- - -	- - -	- - -	1193-1591
	2	2.3	1	- - -	- - -	- - -	968-1340	- - -	- - -	- - -	1193-1591
074	1	1.5	2	- - -	- - -	- - -	968-1340	- - -	- - -	- - -	1193-1591
	2	2.3	2	- - -	- - -	- - -	968-1340	- - -	- - -	- - -	1193-1591

NOTE - Using total air volume and system static pressure requirements determine from blower performance tables rpm and motor hp required. Maximum usable hp of motors furnished are shown. In Canada, nominal motor hp is also maximum usable motor hp. If motors of comparable hp are used, be sure to keep within the service factor limitations outlined on the motor nameplate.

OPTIONS / ACCESSORIES AIR RESISTANCE - in. w.g.

Air Volume cfm	Wet Indoor Coil		Economizer	Electric Heat	Filters	
	024, 030, 036, 048	060, 072, 074			MERV 8	MERV 13
800	0.01	0.01	0.04	0.01	0.04	0.05
1000	0.02	0.01	0.04	0.03	0.04	0.07
1200	0.02	0.01	0.04	0.06	0.04	0.07
1400	0.03	0.02	0.04	0.09	0.04	0.07
1600	0.04	0.03	0.04	0.12	0.04	0.07
1800	0.05	0.04	0.05	0.15	0.05	0.07
2000	0.06	0.05	0.05	0.18	0.05	0.08
2200	0.08	0.06	0.05	0.20	0.05	0.08
2400	0.09	0.07	0.05	0.22	0.05	0.08
2600	0.10	0.08	0.06	0.24	0.05	0.08
2800	0.11	0.09	0.06	0.26	0.05	0.08
3000	0.13	0.10	0.06	0.28	0.05	0.08

BLOWER DATA

CEILING DIFFUSERS AIR RESISTANCE (in. w.g.)

Air Volume cfm	RTD9-65S Step–Down Diffuser			FD9-65S Flush Diffuser	RTD11-95S Step-Down Diffuser			FD11-95S Flush Diffuser
	2 Ends Open	1 Side & 2 Ends Open	All Ends & Sides Open		2 Ends Open	1 Side & 2 Ends Open	All Ends & Sides Open	
800	0.15	0.13	0.11	0.11	- - -	- - -	- - -	- - -
1000	0.19	0.16	0.14	0.14	- - -	- - -	- - -	- - -
1200	0.25	0.20	0.17	0.17	- - -	- - -	- - -	- - -
1400	0.33	0.26	0.20	0.20	- - -	- - -	- - -	- - -
1600	0.43	0.32	0.20	0.24	- - -	- - -	- - -	- - -
1800	0.56	0.40	0.30	0.30	0.13	0.11	0.09	0.09
2000	0.73	0.50	0.36	0.36	0.15	0.13	0.11	0.10
2200	0.95	0.63	0.44	0.44	0.18	0.15	0.12	0.12
2400	- - -	- - - -	- - -	- - -	0.21	0.18	0.15	0.14
2600	- - -	- - - -	- - -	- - -	0.24	0.21	0.18	0.17
2800	- - -	- - - -	- - -	- - -	0.27	0.24	0.21	0.20
3000	- - -	- - - -	- - -	- - -	0.32	0.29	0.25	0.25

CEILING DIFFUSER AIR THROW DATA

Air Volume - cfm Model No.	1 Effective Throw - ft. RTD9-65S	FD9-65S
800	10 - 17	14 - 18
1000	10 - 17	15 - 20
1200	11 - 18	16 - 22
1400	12 - 19	17 - 24
1600	12 - 20	18 - 25
1800	13 - 21	20 - 28
2000	14 - 23	21 - 29
2200	16 - 25	22 - 30
Model No.	**RTD11-95S**	**FD11-95S**
2600	24 - 29	19 - 24
2800	25 - 30	20 - 28
3000	27 - 33	21 - 29

[1] Effective throw based on terminal velocities of 75 ft. per minute.

POWER EXHAUST FAN PERFORMANCE

Return Air System Static Pressure - in. w.g.	Air Volume Exhausted cfm
0.00	2000
0.05	1990
0.10	1924
0.15	1810
0.20	1664
0.25	1507
0.30	1350
0.35	1210

OUTDOOR SOUND DATA

[1] Unit Model No.	Octave Band Linear Sound Power Levels dBA, re 10^{-12} Watts - Center Frequency - Hz							[1] Sound Rating Number (SRN) (dBA)
	125	250	500	1000	2000	4000	8000	
KHA036 and 048	63	66	70	71	68	62	53	75
KHB024, 030, 036	62	67	72	69	66	61	56	75
KHB048	61	67	70	70	68	63	56	75
KHA060	67	72	77	76	73	68	61	82
KHB060	69	72	75	74	70	65	55	80
KHA072	67	75	78	78	75	68	59	83
KHB074	67	75	78	78	75	68	59	83

Note - The octave sound power data does not include tonal corrections.

[1] Sound Rating Number according to ARI Standard 270-95 (includes pure tone penalty). “SRN” is the overall A-Weighted Sound Power Level, (LWA), dBA (100 Hz to 10,000 Hz).

ELECTRICAL/ELECTRIC HEAT DATA - KHB 2 - 2.5 TON

DIRECT DRIVE BLOWER		KHB024S	KHB030S
[1] **Voltage - 60hz**		**208/230V - 1 Ph**	**208/230V - 1 Ph**
Compressor 1	Rated Load Amps	9.8	12.7
	Locked Rotor Amps	47	64
Outdoor Fan Motors (1)	Full Load Amps (total)	1.7	1.7
Service Outlet 115V GFI (amps)		15	15
Indoor Blower Motor	Horsepower	0.25	0.25
	Type	Direct	Direct
	Full Load Amps	1.8	1.8
[2] Maximum Overcurrent Protection	Unit Only	25	30
[3] Minimum Circuit Ampacity	Unit Only	16	20

ELECTRIC HEAT DATA

Electric Heat Voltage			**208V**	**240V**	**208V**	**240V**
[2] Maximum Overcurrent Protection	Unit + Electric Heat	**5 kW**	40	45	50	50
		7.5 kW	50	60	60	60
		10 kW	70	70	70	80
[3] Minimum Circuit Ampacity	Unit + Electric Heat	**5 kW**	39	42	42	46
		7.5 kW	50	55	54	59
		10 kW	61	68	65	72

ELECTRICAL ACCESSORIES

Disconnect	Standard Access - **0-10 kW**	**20W15**	**20W15**	**20W15**	**20W15**
	Hinged Access - **0-10 kW**	**20W21**	**20W21**	**20W21**	**20W21**

NOTE - All units have a minimum Short Circuit Current Rating (SCCR) of 5000 amps.

[1] Extremes of operating range are plus and minus 10% of line voltage.

[2] HACR type breaker or fuse.

[3] Refer to National or Canadian Electrical Code manual to determine wire, fuse and disconnect size requirements.

ELECTRICAL/ELECTRIC HEAT DATA - KHB — 3 TON

KHB036S - DIRECT DRIVE BOWER

[1] Voltage - 60hz		208/230V - 1 Ph	208/230V - 3 Ph	460V - 3 Ph	575V - 3 Ph
Compressor	Rated Load Amps	15.3	8.7	4	3.6
	Locked Rotor Amps	70	70	31	27
Outdoor Fan Motors (1)	Full Load Amps (total)	1.7	1.7	1.1	0.7
Power Exhaust (1) 0.33 HP	Full Load Amps (total)	2.4	2.4	1.3	1
Service Outlet 115V GFI (amps)		15	15	15	20
Indoor Blower Motor	Horsepower	0.5	0.5	0.5	0.5
	Type	Direct	Direct	Direct	Direct
	Full Load Amps	3.9	3.9	2	2
[2] Maximum Overcurrent Protection	Unit Only	40	25	15	15
	with (1) 0.33 HP Power Exhaust	40	25	15	15
[3] Minimum Circuit Ampacity	Unit Only	25	17	9	8
	with (1) 0.33 HP Power Exhaust	28	19	10	9

ELECTRIC HEAT DATA

Electric Heat Voltage			208V	240V	208V	240V	480V	600V
[2] Maximum Overcurrent Protection	Unit + Electric Heat	**7.5 kW**	60	70	40	40	20	20
		15 kW	100	110	60	70	35	30
[3] Minimum Circuit Ampacity	Unit + Electric Heat	**7.5 kW**	59	64	37	40	20	17
		15 kW	93	103	56	62	31	26
[2] Maximum Overcurrent Protection	Unit + Electric Heat + Power Exhaust	**7.5 kW**	70	70	40	45	25	20
		15 kW	100	110	60	70	35	30
[3] Minimum Circuit Ampacity	Unit + Electric Heat + Power Exhaust	**7.5 kW**	61	67	39	42	21	18
		15 kW	95	106	58	64	32	27

ELECTRICAL ACCESSORIES

Disconnect	Standard Access - **0-7.5 kW**	**20W15**	**20W15**	**20W15**	**20W15**
	15 kW	**20W16**	**20W15**	**20W15**	**20W15**
	Hinged Access - **0-7.5 kW**	**20W21**	**20W21**	**20W21**	**20W21**
	15 kW	**20W22**	**20W21**	**20W21**	**20W21**

NOTE - All units have a minimum Short Circuit Current Rating (SCCR) of 5000 amps.

[1] Extremes of operating range are plus and minus 10% of line voltage.

[2] HACR type breaker or fuse.

[3] Refer to National or Canadian Electrical Code manual to determine wire, fuse and disconnect size requirements.

ELECTRICAL/ELECTRIC HEAT DATA - KHB — 4 TON

KHB048S - DIRECT DRIVE BOWER

[1] Voltage - 60hz		208/230V - 1 Ph	208/230V - 3 Ph	460V - 3 Ph	575V - 3 Ph
Compressor	Rated Load Amps	20	11	5.5	4.7
	Locked Rotor Amps	99	86	37	34
Outdoor Fan Motors (1)	Full Load Amps (total)	1.7	1.7	1.1	0.7
Power Exhaust (1) 0.33 HP	Full Load Amps (total)	2.4	2.4	1.3	1
Service Outlet 115V GFI (amps)		15	15	15	20
Indoor Blower Motor	Horsepower	0.5	0.5	0.5	0.5
	Type	Direct	Direct	Direct	Direct
	Full Load Amps	3.9	3.9	2	2
[2] Maximum Overcurrent Protection	Unit Only	50	30	15	15
	with (1) 0.33 HP Power Exhaust	50	30	15	15
[3] Minimum Circuit Ampacity	Unit Only	31	20	10	9
	with (1) 0.33 HP Power Exhaust	33	22	12	10

ELECTRIC HEAT DATA

Electric Heat Voltage			208V	240V	208V	240V	480V	600V
[2] Maximum Overcurrent Protection	Unit + Electric Heat	**7.5 kW**	70	80	45	45	25	20
		15 kW	100	110	60	70	35	30
[3] Minimum Circuit Ampacity	Unit + Electric Heat	**7.5 kW**	65	70	39	42	22	18
		15 kW	99	109	59	65	33	27
[2] Maximum Overcurrent Protection	Unit + Electric Heat + Power Exhaust	**7.5 kW**	80	80	45	50	25	20
		15 kW	110	125	70	70	35	30
[3] Minimum Circuit Ampacity	Unit + Electric Heat + Power Exhaust	**7.5 kW**	67	73	42	45	23	19
		15 kW	101	112	61	67	34	28

ELECTRICAL ACCESSORIES

Disconnect	Standard Access - **0-7.5 kW**	**20W18**	**20W18**	**20W18**	**20W18**
	15 kW	**20W19**	**20W18**	**20W18**	**20W18**
	Hinged Access - **0-7.5 kW**	**20W24**	**20W24**	**20W24**	**20W24**
	15 kW	**20W25**	**20W24**	**20W24**	**20W24**

NOTE - All units have a minimum Short Circuit Current Rating (SCCR) of 5000 amps.

[1] Extremes of operating range are plus and minus 10% of line voltage.

[2] HACR type breaker or fuse.

[3] Refer to National or Canadian Electrical Code manual to determine wire, fuse and disconnect size requirements.

ELECTRICAL/ELECTRIC HEAT DATA - KHB — 3 TON

KHB036S - BELT DRIVE BLOWER

[1] Voltage - 60hz		208/230V - 1 Ph		208/230V - 3 Ph		460V - 3 Ph		575V - 3 Ph	
Compressor	Rated Load Amps	15.3		8.7		4		3.6	
	Locked Rotor Amps	70		70		31		27	
Outdoor Fan Motors (1)	Full Load Amps (total)	1.7		1.7		1.1		0.7	
Power Exhaust (1) 0.33 HP	Full Load Amps (total)	2.4		2.4		1.3		1	
Service Outlet 115V GFI (amps)		15		15		15		20	
Indoor Blower Motor	Horsepower	0.75	1.5	1	2	1	2	1	2
	Type	Belt	Belt	Belt	Belt	Belt	Belt	Belt	Belt
	Full Load Amps	7.6	11	4.6	7.5	2.1	3.4	1.7	2.7
[2] Maximum Overcurrent Protection	Unit Only	40	45	25	25	15	15	15	15
	with (1) 0.33 HP Power Exhaust	45	45	25	30	15	15	15	15
[3] Minimum Circuit Ampacity	Unit Only	29	32	18	21	9	10	7	8
	with (1) 0.33 HP Power Exhaust	31	35	20	23	10	11	8	9

ELECTRIC HEAT DATA

Electric Heat Voltage			208V	240V	208V	240V	208V	240V	208V	240V	480V	480V	600V	600V
[2] Maximum Overcurrent Protection	Unit + Electric Heat	**7.5 kW**	60	70	70	80	40	40	40	45	20	25	20	20
		15 kW	100	110	100	110	60	70	60	70	35	35	25	30
[3] Minimum Circuit Ampacity	Unit + Electric Heat	**7.5 kW**	63	68	66	71	37	40	40	43	20	21	16	17
		15 kW	97	107	100	110	57	63	60	66	31	33	25	26
[2] Maximum Overcurrent Protection	Unit + Electric Heat + Power Exhaust	**7.5 kW**	70	70	70	80	40	45	45	50	25	25	20	20
		15 kW	100	110	110	125	60	70	70	70	35	35	30	30
[3] Minimum Circuit Ampacity	Unit + Electric Heat + Power Exhaust	**7.5 kW**	65	70	69	74	40	43	43	46	21	23	17	18
		15 kW	99	109	102	113	59	65	62	68	33	34	26	27

ELECTRICAL ACCESSORIES

Disconnect	Standard Access - **0-7.5 kW**	**20W15**	**20W15**	**20W15**	**20W15**	**20W15**
	15 kW	**20W16**	**20W15**	**20W15**	**20W15**	**20W15**
	Hinged Access - **0-7.5 kW**	**20W21**	**20W21**	**20W21**	**20W21**	**20W21**
	15 kW	**20W22**	**20W21**	**20W21**	**20W21**	**20W21**

NOTE - All units have a minimum Short Circuit Current Rating (SCCR) of 5000 amps.

[1] Extremes of operating range are plus and minus 10% of line voltage.

[2] HACR type breaker or fuse.

[3] Refer to National or Canadian Electrical Code manual to determine wire, fuse and disconnect size requirements.

ELECTRICAL/ELECTRIC HEAT DATA - KHB — 4 TON

KHB048S - BELT DRIVE BLOWER

[1] Voltage - 60hz		208/230V - 1 Ph		208/230V - 3 Ph		460V - 3 Ph		575V - 3 Ph	
Compressor	Rated Load Amps	20		11		5.5		4.7	
	Locked Rotor Amps	99		86		37		34	
Outdoor Fan Motors (1)	Full Load Amps (total)	1.7		1.7		1.1		0.7	
Power Exhaust (1) 0.33 HP	Full Load Amps (total)	2.4		2.4		1.3		1	
Service Outlet 115V GFI (amps)		15		15		15		20	
Indoor Blower Motor	Horsepower	0.75	1.5	1	2	1	2	1	2
	Type	Belt	Belt	Belt	Belt	Belt	Belt	Belt	Belt
	Full Load Amps	7.6	11	4.6	7.5	2.1	3.4	1.7	2.7
[2] Maximum Overcurrent Protection	Unit Only	50	50	30	30	15	15	15	15
	with (1) 0.33 HP Power Exhaust	50	60	30	35	15	15	15	15
[3] Minimum Circuit Ampacity	Unit Only	35	38	21	23	11	12	9	10
	with (1) 0.33 HP Power Exhaust	37	41	23	26	12	13	10	11

ELECTRIC HEAT DATA

Electric Heat Voltage			208V	240V	208V	240V	208V	240V	208V	240V	480V	480V	600V	600V
[2] Maximum Overcurrent Protection	Unit + Electric Heat	**7.5 kW**	80	80	80	80	45	45	45	50	25	25	20	20
		15 kW	110	125	110	125	60	70	70	70	35	35	30	30
[3] Minimum Circuit Ampacity	Unit + Electric Heat	**7.5 kW**	69	74	72	77	40	43	43	46	22	23	18	19
		15 kW	103	113	106	116	60	66	63	69	33	34	27	28
[2] Maximum Overcurrent Protection	Unit + Electric Heat + Power Exhaust	**7.5 kW**	80	80	80	90	45	50	50	50	25	25	20	20
		15 kW	100	110	110	125	70	70	70	80	35	40	30	30
[3] Minimum Circuit Ampacity	Unit + Electric Heat + Power Exhaust	**7.5 kW**	71	76	74	80	42	46	45	48	23	24	19	20
		15 kW	105	115	108	119	62	68	65	71	34	36	28	29

ELECTRICAL ACCESSORIES

Disconnect	Standard Access - **0-7.5 kW**	**20W18**	**20W18**	**20W18**	**20W18**	**20W18**
	15 kW	**20W19**	**20W18**	**20W18**	**20W18**	**20W18**
	Hinged Access - **0-7.5 kW**	**20W24**	**20W24**	**20W24**	**20W24**	**20W24**
	15 kW	**20W25**	**20W24**	**20W24**	**20W24**	**20W24**

NOTE - All units have a minimum Short Circuit Current Rating (SCCR) of 5000 amps.

[1] Extremes of operating range are plus and minus 10% of line voltage.

[2] HACR type breaker or fuse.

[3] Refer to National or Canadian Electrical Code manual to determine wire, fuse and disconnect size requirements.

ELECTRICAL/ELECTRIC HEAT DATA - KHB — 5 TON

KHB060S - BELT DRIVE BLOWER

[1] Voltage - 60hz		208/230V - 1 Ph		208/230V - 3 Ph		460V - 3 Ph		575V - 3 Ph	
Compressor	Rated Load Amps	22.1		13.5		8		5	
	Locked Rotor Amps	125		109		59		40	
Outdoor Fan Motors (1)	Full Load Amps (total)	2.4		2.4		1.3		1	
Power Exhaust (1) 0.33 HP	Full Load Amps (total)	2.4		2.4		1.3		1	
Service Outlet 115V GFI (amps)		15		15		15		20	
Indoor Blower Motor	Horsepower	0.75	1.5	1	2	1	2	1	2
	Type	Belt	Belt	Belt	Belt	Belt	Belt	Belt	Belt
	Full Load Amps	7.6	11	4.6	7.5	2.1	3.4	1.7	2.7
[2] Maximum Overcurrent Protection	Unit Only	50	60	35	40	20	20	15	15
	with (1) 0.33 HP Power Exhaust	60	60	35	40	20	20	15	15
[3] Minimum Circuit Ampacity	Unit Only	38	42	24	27	14	15	9	10
	with (1) 0.33 HP Power Exhaust	41	44	27	30	15	16	10	11

ELECTRIC HEAT DATA

Electric Heat Voltage			208V	240V	208V	240V	208V	240V	208V	240V	480V	480V	600V	600V
[2] Maximum Overcurrent Protection	Unit + Electric Heat	**7.5 kW**	80	90	90	90	50	50	50	50	30	30	20	20
		15 kW	110	125	110	125	70	70	70	80	40	40	30	30
		22.5 kW	150	175	150	175	90	100	90	100	50	50	40	40
[3] Minimum Circuit Ampacity	Unit + Electric Heat	**7.5 kW**	72	77	75	81	44	47	47	50	25	26	18	19
		15 kW	106	116	109	120	63	69	66	72	36	38	27	28
		22.5 kW	140	155	143	159	83	92	86	95	48	49	37	38
[2] Maximum Overcurrent Protection	Unit + Electric Heat + Power Exhaust	**7.5 kW**	80	90	90	90	50	50	50	60	30	30	20	20
		15 kW	110	125	125	125	70	80	70	80	40	40	30	30
		22.5 kW	150	175	150	175	90	100	90	100	50	50	40	40
[3] Minimum Circuit Ampacity	Unit + Electric Heat + Power Exhaust	**7.5 kW**	74	80	78	83	46	49	49	52	26	28	19	20
		15 kW	108	119	112	122	66	72	69	75	38	39	28	29
		22.5 kW	142	158	145	161	85	94	88	97	49	50	38	39

ELECTRICAL ACCESSORIES

Disconnect	Standard Access - **0-7.5 kW**	**20W19**	**20W18**	**20W18**	**20W18**	**20W18**	**20W18**
	15 kW	**20W19**	**20W19**	**20W18**	**20W18**	**20W18**	**20W18**
	22.5 kW	**20W19**	**N/A**	**20W19**	**20W19**	**20W18**	**20W18**
	Hinged Access - **0-7.5 kW**	**20W25**	**20W24**	**20W24**	**20W24**	**20W24**	**20W24**
	15 kW	**20W25**	**20W25**	**20W24**	**20W24**	**20W24**	**20W24**
	22.5 kW	**20W25**	**N/A**	**20W25**	**20W25**	**20W24**	**20W24**

NOTE - All units have a minimum Short Circuit Current Rating (SCCR) of 5000 amps.

[1] Extremes of operating range are plus and minus 10% of line voltage.

[2] HACR type breaker or fuse.

[3] Refer to National or Canadian Electrical Code manual to determine wire, fuse and disconnect size requirements.

ELECTRICAL/ELECTRIC HEAT DATA- KHB — 6 TON

KHB074S - BELT DRIVE BLOWER

1 Voltage - 60hz		208/230V - 3 Ph		460V - 3 Ph		575V - 3 Ph	
Compressor	Rated Load Amps	17.6		8.5		6.3	
	Locked Rotor Amps	136		66.1		55.3	
Outdoor Fan Motor	Full Load Amps	3		1.5		1.2	
Power Exhaust (1) 0.33 HP	Full Load Amps	2.4		1.3		1	
Service Outlet 115V GFI (amps)		15		15		20	
Indoor Blower Motor	Horsepower	1	2	1	2	1	2
	Type	Belt	Belt	Belt	Belt	Belt	Belt
	Full Load Amps	4.6	7.5	2.1	3.4	1.7	2.7
[2] Maximum Overcurrent Protection	Unit Only	45	50	20	20	15	15
	With (1) 0.33 HP Power Exhaust	45	50	20	25	15	15
[3] Minimum Circuit Ampacity	Unit Only	30	33	15	16	11	12
	With (1) 0.33 HP Power Exhaust	32	35	16	17	12	13

ELECTRIC HEAT DATA

Electric Heat Voltage			208	240	208	240	480	480	600	600
[2] Maximum Overcurrent Protection	Unit+ Electric Heat	**7.5 kW**	60	60	60	60	30	30	20	25
		15 kW	70	80	80	80	40	40	30	30
		22.5 kW	90	100	100	110	50	50	40	40
		30 kW	110	125	125	125	60	70	50	50
[3] Minimum Circuit Ampacity	Unit+ Electric Heat	**7.5 kW**	50	53	53	56	26	27	20	21
		15 kW	69	75	72	78	37	39	29	30
		22.5 kW	89	98	92	101	49	50	38	39
		30 kW	108	120	111	123	60	61	47	48
[2] Maximum Overcurrent Protection	Unit+ Electric Heat and (1) 0.33 HP Power Exhaust	**7.5 kW**	60	60	60	70	30	30	25	25
		15 kW	80	80	80	90	40	40	30	35
		22.5 kW	100	100	100	110	50	60	40	40
		30 kW	125	125	125	150	70	70	50	50
[3] Minimum Circuit Ampacity	Unit+ Electric Heat and (1) 0.33 HP Power Exhaust	**7.5 kW**	52	55	55	58	27	29	21	22
		15 kW	72	78	74	81	39	40	30	31
		22.5 kW	91	100	94	103	50	51	39	40
		30 kW	111	123	114	126	61	62	48	49

ELECTRICAL ACCESSORIES

Disconnect Kit	Standard Access - **0-15 kW**	**20W18**	**20W18**	**20W18**	**20W18**
	22.5-30 kW	**20W19**	**20W19**	**20W18**	**20W18**
	Hinged Access - **0-15 kW**	**20W24**	**20W24**	**20W24**	**20W24**
	22.5-30 kW	**20W25**	**20W25**	**20W24**	**20W24**

NOTE - All units have a minimum Short Circuit Current Rating (SCCR) of 5000 amps.

[1] Extremes of operating range are plus and minus 10% of line voltage.

[2] HACR type breaker or fuse.

[3] Refer to National or Canadian Electrical Code manual to determine wire, fuse and disconnect size requirements.

ELECTRICAL/ELECTRIC HEAT DATA - KHA — 3 TON

KHA036S - DIRECT AND BELT DRIVE

[1] Voltage - 60hz		208/230V - 3 Ph			460V - 3 Ph			575V - 3 Ph		
Compressor	Rated Load Amps	10.4			5.8			3.8		
	Locked Rotor Amps	73			38			36.5		
Outdoor Fan Motors (1)	Full Load Amps (total)	1.7			1.1			0.7		
Power Exhaust (1) 0.33 HP	Full Load Amps (total)	2.4			1.3			1		
Service Outlet 115V GFI (amps)		15			15			20		
Indoor Blower Motor	Horsepower	0.5	1	2	0.5	1	2	0.5	1	2
	Type	Direct	Belt	Belt	Direct	Belt	Belt	Direct	Belt	Belt
	Full Load Amps	3.9	4.6	7.5	2	2.1	3.4	2	1.7	2.7
[2] Maximum Overcurrent Protection	Unit Only	25	25	30	15	15	15	15	15	15
	with (1) 0.33 HP Power Exhaust	30	30	35	15	15	15	15	15	15
[3] Minimum Circuit Ampacity	Unit Only	19	20	23	11	11	12	8	8	9
	with (1) 0.33 HP Power Exhaust	21	22	25	12	12	14	9	9	10

ELECTRIC HEAT DATA

Electric Heat Voltage			208V	240V	208V	240V	208V	240V	480V	480V	480V	600V	600V	600V
[2] Maximum Overcurrent Protection	Unit + Electric Heat	**7.5 kW**	40	45	45	45	45	50	25	25	25	20	20	20
		15 kW	60	70	60	70	70	70	35	35	35	30	30	30
[3] Minimum Circuit Ampacity	Unit + Electric Heat	**7.5 kW**	39	42	39	42	42	45	22	22	24	17	17	18
		15 kW	58	64	59	65	62	68	33	34	35	26	26	27
[2] Maximum Overcurrent Protection	Unit + Electric Heat + Power Exhaust	**7.5 kW**	45	45	45	50	50	50	25	25	25	20	20	20
		15 kW	70	70	70	70	70	70	35	35	40	30	30	30
[3] Minimum Circuit Ampacity	Unit + Electric Heat + Power Exhaust	**7.5 kW**	41	44	42	45	45	48	23	24	25	18	18	19
		15 kW	61	67	61	67	64	70	35	35	36	27	27	28

ELECTRICAL ACCESSORIES

Disconnect	Standard Access - **0-15 kW**	**20W15**	**20W15**	**20W15**	**20W15**	**20W15**
	Hinged Access - **0-15 kW**	**20W21**	**20W21**	**20W21**	**20W21**	**20W21**

NOTE - All units have a minimum Short Circuit Current Rating (SCCR) of 5000 amps.

[1] Extremes of operating range are plus and minus 10% of line voltage.

[2] HACR type breaker or fuse.

[3] Refer to National or Canadian Electrical Code manual to determine wire, fuse and disconnect size requirements.

ELECTRICAL/ELECTRIC HEAT DATA - KHA — 4 TON

KHA048S - DIRECT AND BELT DRIVE

[1] Voltage - 60hz		208/230V - 3 Ph			460V - 3 Ph			575V - 3 Ph		
Compressor	Rated Load Amps	13.7			6.2			4.8		
	Locked Rotor Amps	83.1			41			33		
Outdoor Fan Motors (1)	Full Load Amps (total)	1.7			1.1			0.7		
Power Exhaust (1) 0.33 HP	Full Load Amps (total)	2.4			1.3			1		
Service Outlet 115V GFI (amps)		15			15			20		
Indoor Blower Motor	Horsepower	0.5	1	2	0.5	1	2	0.5	1	2
	Type	Direct	Belt	Belt	Direct	Belt	Belt	Direct	Belt	Belt
	Full Load Amps	3.9	4.6	7.5	2	2.1	3.4	2	1.7	2.7
[2] Maximum Overcurrent Protection	Unit Only	35	35	40	15	15	15	15	15	15
	with (1) 0.33 HP Power Exhaust	35	35	40	15	15	15	15	15	15
[3] Minimum Circuit Ampacity	Unit Only	23	24	27	11	11	13	9	9	10
	with (1) 0.33 HP Power Exhaust	26	26	29	13	13	14	10	10	11

ELECTRIC HEAT DATA

Electric Heat Voltage			208V	240V	208V	240V	208V	240V	480V	480V	480V	600V	600V	600V
[2] Maximum Overcurrent Protection	Unit + Electric Heat	**7.5 kW**	50	50	50	50	50	50	25	25	25	20	20	20
		15 kW	70	70	70	70	70	80	35	35	35	30	30	30
[3] Minimum Circuit Ampacity	Unit + Electric Heat	**7.5 kW**	43	46	43	46	46	49	23	23	24	18	18	19
		15 kW	62	68	63	69	66	72	34	34	35	27	27	28
[2] Maximum Overcurrent Protection	Unit + Electric Heat + Power Exhaust	**7.5 kW**	50	50	50	50	50	60	25	25	25	20	20	20
		15 kW	70	80	70	80	70	80	35	35	40	30	30	30
[3] Minimum Circuit Ampacity	Unit + Electric Heat + Power Exhaust	**7.5 kW**	45	48	46	49	49	52	24	24	25	19	19	20
		15 kW	65	71	65	71	68	74	35	35	37	28	28	29

ELECTRICAL ACCESSORIES

Disconnect	Standard Access - **0-15 kW**	**20W15**	**20W15**	**20W15**	**20W15**	**20W15**
	Hinged Access - **0-15 kW**	**20W21**	**20W21**	**20W21**	**20W21**	**20W21**

NOTE - All units have a minimum Short Circuit Current Rating (SCCR) of 5000 amps.

[1] Extremes of operating range are plus and minus 10% of line voltage.

[2] HACR type breaker or fuse.

[3] Refer to National or Canadian Electrical Code manual to determine wire, fuse and disconnect size requirements.

ELECTRICAL/ELECTRIC HEAT DATA - KHA — 5 TON

KHA060S - BELT DRIVE

[1] Voltage - 60hz		208/230V - 3 Ph		460V - 3 Ph		575V - 3 Ph	
Compressor	Rated Load Amps	15.6		7.8		5.8	
	Locked Rotor Amps	110		52		38.9	
Outdoor Fan Motors (1)	Full Load Amps (total)	2.4		1.3		1	
Power Exhaust (1) 0.33 HP	Full Load Amps (total)	2.4		1.3		1	
Service Outlet 115V GFI (amps)		15		15		20	
Indoor Blower Motor	Horsepower	1	2	1	2	1	2
	Type	Belt	Belt	Belt	Belt	Belt	Belt
	Full Load Amps	4.6	7.5	2.1	3.4	1.7	2.7
[2] Maximum Overcurrent Protection	Unit Only	40	45	20	20	15	15
	with (1) 0.33 HP Power Exhaust	40	45	20	20	15	15
[3] Minimum Circuit Ampacity	Unit Only	27	30	14	15	10	11
	with (1) 0.33 HP Power Exhaust	29	32	15	16	11	12

ELECTRIC HEAT DATA

Electric Heat Voltage			208V	240V	208V	240V	480V	480V	600V	600V
[2] Maximum Overcurrent Protection	Unit + Electric Heat	**7.5 kW**	50	60	60	60	25	30	20	20
		15 kW	70	80	70	80	40	40	30	30
		22.5 kW	90	100	90	100	50	50	40	40
[3] Minimum Circuit Ampacity	Unit + Electric Heat	**7.5 kW**	47	50	49	52	25	26	19	20
		15 kW	66	72	69	75	36	38	28	29
		22.5 kW	86	95	89	98	47	49	38	39
[2] Maximum Overcurrent Protection	Unit + Electric Heat + Power Exhaust	**7.5 kW**	60	60	60	60	30	30	20	25
		15 kW	70	80	80	80	40	40	30	30
		22.5 kW	90	100	100	100	50	50	40	40
[3] Minimum Circuit Ampacity	Unit + Electric Heat + Power Exhaust	**7.5 kW**	49	52	52	55	26	28	20	21
		15 kW	68	75	71	77	38	39	29	30
		22.5 kW	88	97	91	100	49	50	39	40

ELECTRICAL ACCESSORIES

Disconnect	Standard Access - **0-15 kW**	**20W18**	**20W18**	**20W18**	**20W18**
	22.5 kW	**20W19**	**20W19**	**20W18**	**20W18**
	Hinged Access - **0-15 kW**	**20W24**	**20W24**	**20W24**	**20W24**
	22.5 kW	**20W25**	**20W25**	**20W24**	**20W24**

NOTE - All units have a minimum Short Circuit Current Rating (SCCR) of 5000 amps.

[1] Extremes of operating range are plus and minus 10% of line voltage.

[2] HACR type breaker or fuse.

[3] Refer to National or Canadian Electrical Code manual to determine wire, fuse and disconnect size requirements.

ELECTRICAL/ELECTRIC HEAT DATA- KHA — 6 TON

KHA072S - BELT DRIVE BLOWER

1 Voltage - 60hz		208/230V - 3 Ph		460V - 3 Ph		575V - 3 Ph	
Compressor	Rated Load Amps	19		9.7		7.4	
	Locked Rotor Amps	123		62		50	
Outdoor Fan Motor	Full Load Amps	3		1.5		1.2	
Power Exhaust (1) 0.33 HP	Full Load Amps	2.4		1.3		1	
Service Outlet 115V GFI (amps)		15		15		20	
Indoor Blower Motor	Horsepower	1.5	2	1.5	2	1.5	2
	Type	Belt	Belt	Belt	Belt	Belt	Belt
	Full Load Amps	6.6	7.5	3	3.4	2.4	2.7
[2] Maximum Overcurrent Protection	Unit Only	50	50	25	25	20	20
	With (1) 0.33 HP Power Exhaust	50	50	25	25	20	20
[3] Minimum Circuit Ampacity	Unit Only	34	35	17	18	13	14
	With (1) 0.33 HP Power Exhaust	36	37	18	19	14	15

ELECTRIC HEAT DATA

Electric Heat Voltage			208	240	208	240	480	480	600	600
[2] Maximum Overcurrent Protection	Unit+ Electric Heat	**7.5 kW**	60	70	60	70	35	35	25	25
		15 kW	80	80	80	80	40	40	35	35
		22.5 kW	100	110	100	110	60	60	40	45
		30 kW	125	125	125	125	70	70	50	50
[3] Minimum Circuit Ampacity	Unit+ Electric Heat	**7.5 kW**	53	56	54	57	28	29	22	23
		15 kW	73	79	74	80	40	40	31	32
		22.5 kW	92	102	93	102	51	51	40	41
		30 kW	112	124	113	125	62	63	49	50
[2] Maximum Overcurrent Protection	Unit+ Electric Heat and (1) 0.33 HP Power Exhaust	**7.5 kW**	70	70	70	70	35	35	25	25
		15 kW	80	90	80	90	45	45	35	35
		22.5 kW	100	110	100	110	60	60	45	45
		30 kW	125	150	125	150	70	70	50	60
[3] Minimum Circuit Ampacity	Unit+ Electric Heat and (1) 0.33 HP Power Exhaust	**7.5 kW**	56	59	57	60	30	30	23	24
		15 kW	75	81	76	82	41	41	32	33
		22.5 kW	95	104	96	105	52	53	41	42
		30 kW	114	126	115	127	64	64	50	51

ELECTRICAL ACCESSORIES

Disconnect Kit	Standard Access - **0-15 kW**	**20W18**	**20W18**	**20W18**	**20W18**
	22.5-30 kW	**20W19**	**20W19**	**20W18**	**20W18**
	Hinged Access - **0-15 kW**	**20W24**	**20W24**	**20W24**	**20W24**
	22.5-30 kW	**20W25**	**20W25**	**20W24**	**20W24**

NOTE - All units have a minimum Short Circuit Current Rating (SCCR) of 5000 amps.

[1] Extremes of operating range are plus and minus 10% of line voltage.

[2] HACR type breaker or fuse.

[3] Refer to National or Canadian Electrical Code manual to determine wire, fuse and disconnect size requirements.

ELECTRIC HEAT CAPACITIES

Input Voltage	5 kW			7.5 kW			10 kW		
	No of Stages	kW input	Btuh Output	No of Stages	kW input	Btuh Output	No of Stages	kW input	Btuh Output
208	1	3.8	12,800	1	5.6	19,200	1	7.5	25,600
220	1	4.2	14,300	1	6.3	21,500	1	8.4	28,700
230	1	4.6	15,700	1	6.9	23,500	1	9.2	31,400
240	1	5.0	17,100	1	7.5	25,600	1	10.0	34,200
440	- - -	- - -	- - -	1	6.3	21,500	- - -	- - -	- - -
460	- - -	- - -	- - -	1	6.9	23,500	- - -	- - -	- - -
480	- - -	- - -	- - -	1	7.5	25,600	- - -	- - -	- - -
550	- - -	- - -	- - -	1	6.3	21,500	- - -	- - -	- - -
575	- - -	- - -	- - -	1	6.9	23,500	- - -	- - -	- - -
600	- - -	- - -	- - -	1	7.5	25,600	- - -	- - -	- - -

Input Voltage	15 kW			22.5 kW			30 kW		
	No of Stages	kW input	Btuh Output	No of Stages	kW input	Btuh Output	No of Stages	kW input	Btuh Output
208	1	11.2	38,400	1	16.9	57,700	1	22.5	76,800
220	1	12.6	43,000	1	18.9	64,500	1	25.2	86,000
230	1	13.8	47,000	1	20.7	70,700	1	27.5	93,900
240	1	15.0	51,200	1	22.5	76,800	1	30.0	102,400
440	1	12.6	43,000	1	18.9	64,500	1	25.2	86,000
460	1	13.8	47,000	1	20.7	70,700	1	27.5	93,900
480	1	15.0	51,200	1	22.5	76,800	1	30.0	102,400
550	1	12.6	43,000	1	18.9	64,500	1	25.2	86,000
575	1	13.8	47,000	1	20.7	70,700	1	27.5	93,900
600	1	15.0	51,200	1	22.5	76,800	1	30.0	102,400

UNIT CLEARANCES - INCHES (MM)

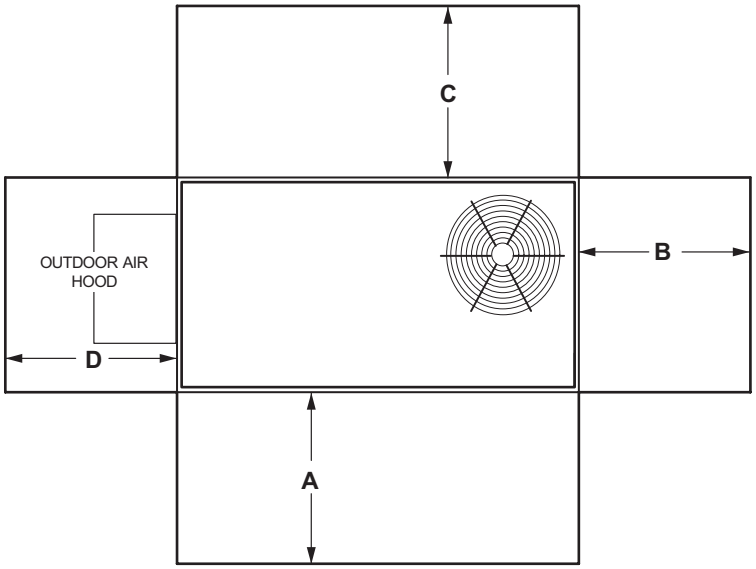

[1] Unit Clearance	A		B		C		D		Top Clearance
	in.	mm	in.	mm	in.	mm	in.	mm	
Service Clearance	36	914	36	914	36	914	36	914	**Unobstructed**
Minimum Operation Clearance	36	914	36	914	36	914	36	914	

NOTE - Entire perimeter of unit base requires support when elevated above the mounting surface.

[1] Service Clearance - Required for removal of serviceable parts.
Minimum Operation Clearance - Required clearance for proper unit operation.

OPTIONAL CONVENTIONAL TEMPERATURE CONTROL SYSTEMS

Item	Model No.	Catalog No.
COMFORTSENSE® 7500 COMMERCIAL 7-DAY PROGRAMMABLE THERMOSTAT		
• Four-Stage Heating / Two-Stage Cooling Universal Multi-Stage • Intuitive Touchscreen Interface • Remote Indoor Temperature Sensing with Averaging • Outside or Discharge Air Temperature Display • Full Seven-Day Programming • Four Time Periods Per Day • Occupancy Scheduling with Economizer Relay Control • Away Mode • Holiday Scheduling • Smooth Setback Recovery (SSR) • Performance Reports • Notifications/Reminders • Dehumidification/Humiditrol® Control for Split Systems and Rooftop Units • Economizer Relay Control • Backlit Display • Wallplate Furnished	C0STAT06FF1L	**13H15**
Optional Accessories		
[1] Remote non-adjustable wall mount 20k temperature sensor	C0SNZN01AE2-	**47W36**
[1] Remote non-adjustable wall mount 10k temperature sensor	C0SNZN73AE1-	**47W37**
Remote non-adjustable discharge air (duct mount) temperature sensor	C0SNDC00AE1-	**19L22**
Outdoor temperature sensor	C0SNSR03AE1-	**X2658**
Locking cover (clear)	C0MISC15AE1-	**39P21**

[1] Remote sensors can be applied in any of the following combinations:
One Sensor - (1) 47W36
Two Sensors - (2) 47W37
Three Sensors - (2) 47W36 and (1) 47W37
Four Sensors - (4) 47W36
Five Sensors - (3) 47W36 and (2) 47W37

COMFORTSENSE® 3000 COMMERCIAL 5-2 DAY PROGRAMMABLE THERMOSTAT		
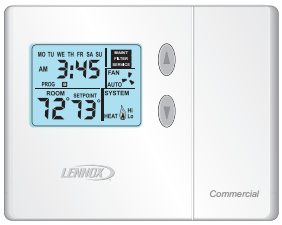 • Two-Stage Heating / Two-Stage Cooling Conventional Systems • Intuitive Interface • 5-2 Day Programming • Program Hold • Remote Indoor Temperature Sensing • Smooth Setback Recovery (SSR) • Economizer Relay Control • Maintenance/Filter/Service Reminders • Backlit Display • Wallplate Furnished • Simple Up and Down Temperature Control.	C0STAT05FF1L	**11Y05**
Optional Accessories		
Remote non-adjustable wall mount 10k averaging temperature sensor	C0SNZN73AE1-	**47W37**
Optional wall mounting plate	C0MISC17AE1-	**X2659**
DIGITAL NON-PROGRAMMABLE THERMOSTAT		
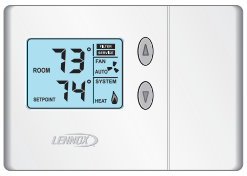 • One-Stage Heating / Cooling Conventional Systems • Intuitive Interface • Automatic Changeover • Backlit Display • Simple Up and Down Temperature Control.	C0STAT12AE1L	**51M32**
Optional Accessories		
Outdoor temperature sensor	C0SNSR04AE1-	**X2658**
Optional wall mounting plate	C0MISC17AE1-	**X2659**

WEIGHT DATA

Model Number	Net				Shipping			
	Base		Max.		Base		Max.	
	lbs.	kg	lbs.	kg	lbs.	kg	lbs.	kg
KHB024S	566	257	664	301	607	275	705	320
KHB030S	566	257	664	301	607	275	705	320
KHA036S	535	243	647	293	595	270	716	325
KHB036S	566	257	664	301	607	275	705	320
KHA048S	557	253	669	303	617	280	738	335
KHB048S	641	291	767	348	682	309	808	367
KHA060S	667	303	770	349	727	330	842	382
KHB060S	686	311	792	359	727	330	833	378
KHA072S	750	340	862	391	810	367	931	422
KHB074S	750	340	862	391	810	367	931	422

Base Unit - The unit with NO OPTIONS.
Max. Unit - The unit with ALL OPTIONS Installed (Economizer, etc.)

OPTIONS / ACCESSORIES

		Shipping Weights	
		lbs.	kg
ECONOMIZER / OUTDOOR AIR / EXHAUST			
Economizer			
Economizer - Includes Barometric Relief Dampers and Exhaust Hood		131	59
Outdoor Air Dampers			
Motorized		25	12
Manual		18	9
Power Exhaust			
Standard Static		35	16
ELECTRIC HEAT			
5 kW		31	14
7.5 kW		31	14
10 kW		31	14
15 kW		31	14
22.5 kW		35	16
30 kW		35	16
ROOF CURBS			
Hybrid Roof Curbs, Downflow			
8 in. height		50	23
14 in. height		70	32
18 in. height		80	36
24 in. height		100	45
Hybrid Curbs, Full Perimeter, Downflow			
8 in. height		57	26
14 in. height		60	27
18 in. height		91	41
24 in. height		114	52
Adjustable Pitch Curb, Downflow			
14 in. height		113	51
CEILING DIFFUSERS			
Step-Down	RTD9-65S	80	36
	RTD11-95S	118	54
Flush	FD9-65S	80	36
	FD11-95S	118	54
Transitions (Supply and Return)	T1TRAN10AN1	22	10
	T1TRAN20N-1	21	10

DIMENSIONS - UNIT - INCHES (MM) - KHA

Model No.	CORNER WEIGHTS																CENTER OF GRAVITY							
	AA				BB				CC				DD				EE				FF			
	Base		Max.		Base		Max.		Base		Max.		Base		Max.		Base		Max.		Base		Max.	
	lbs.	kg	lbs.	kg	lbs.	kg	lbs.	kg	lbs.	kg	lbs.	kg	lbs.	kg	lbs.	kg	in.	mm	in.	mm	in.	mm	in.	mm
036	93	42	116	53	112	51	132	60	181	82	212	96	149	68	187	85	38-1/2	978	40	1016	18	457	18	457
048	96	44	120	55	117	53	136	62	188	86	219	100	155	71	194	88	38-1/2	978	40	1016	18	457	18	457
060	115	52	138	63	140	64	157	71	226	103	252	115	166	84	223	101	38-1/2	978	40	1016	18	457	18	457
072	160	73	185	84	180	82	208	94	233	106	269	122	207	94	239	108	46-1/4	1174	46-1/4	1174	20-1/2	521	20-1/2	521

Base Unit - The unit with standard heat exchanger NO OPTIONS.
Max. Unit - The unit with ALL OPTIONS Installed (Economizer, etc.).

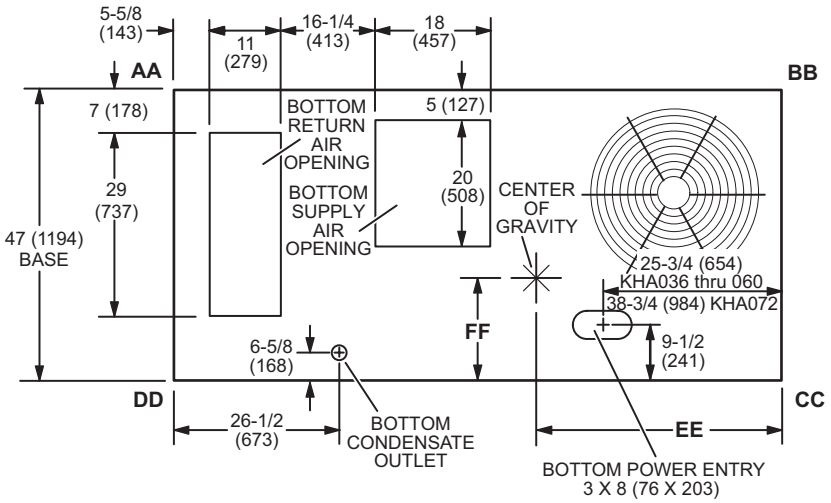

TOP VIEW (Base)

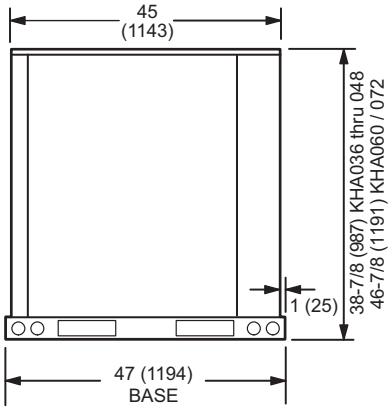

END VIEW

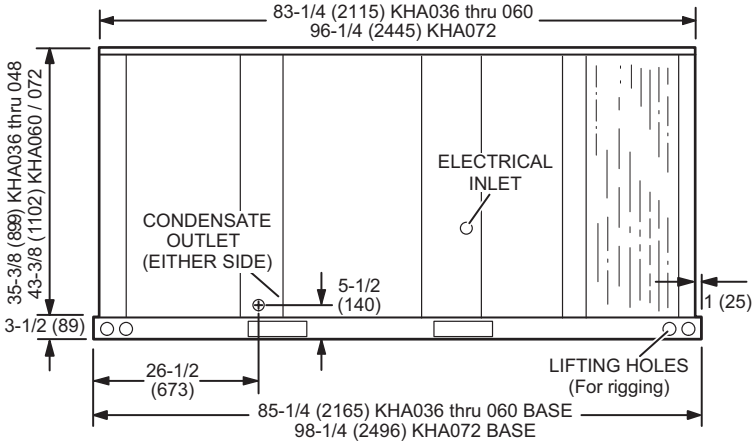

SIDE VIEW

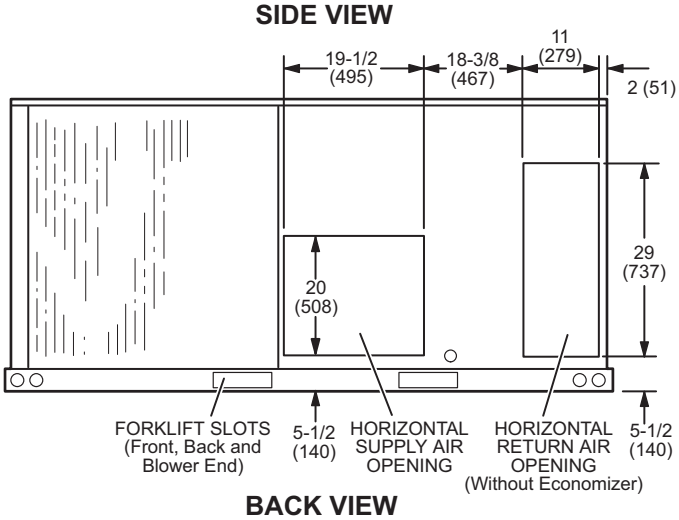

BACK VIEW

DIMENSIONS - UNIT - INCHES (MM) - KHB

Model No.	CORNER WEIGHTS																CENTER OF GRAVITY							
	AA				BB				CC				DD				EE				FF			
	Base		Max.		Base		Max.		Base		Max.		Base		Max.		Base		Max.		Base		Max.	
	lbs.	kg	lbs.	kg	lbs.	kg	lbs.	kg	lbs.	kg	lbs.	kg	lbs.	kg	lbs.	kg	in.	mm	in.	mm	in.	mm	in.	mm
024	119	54	140	64	149	67	153	69	165	75	170	77	133	60	201	91	38	965	43-3/4	1111	22-1/4	565	22-1/4	565
030	119	54	140	64	149	67	153	69	165	75	170	77	133	60	201	91	38	965	43-3/4	1111	22-1/4	565	22-1/4	565
036	119	54	140	64	149	67	153	70	165	75	170	77	133	60	201	91	38	965	43-3/4	1111	22-1/4	565	22-1/4	565
048	128	58	153	69	159	72	177	80	197	89	239	109	158	72	198	90	38	965	39	991	21	533	20	508
060	137	62	158	72	170	77	175	79	210	95	236	107	169	77	223	101	38	965	41	1041	21	533	20	508
074	160	73	185	84	180	82	208	94	233	106	269	122	207	94	239	108	46-1/4	1174	46-1/4	1174	20-1/2	521	20-1/2	521

Base Unit - The unit with standard heat exchanger NO OPTIONS.
Max. Unit - The unit with ALL OPTIONS Installed (Economizer, etc.).

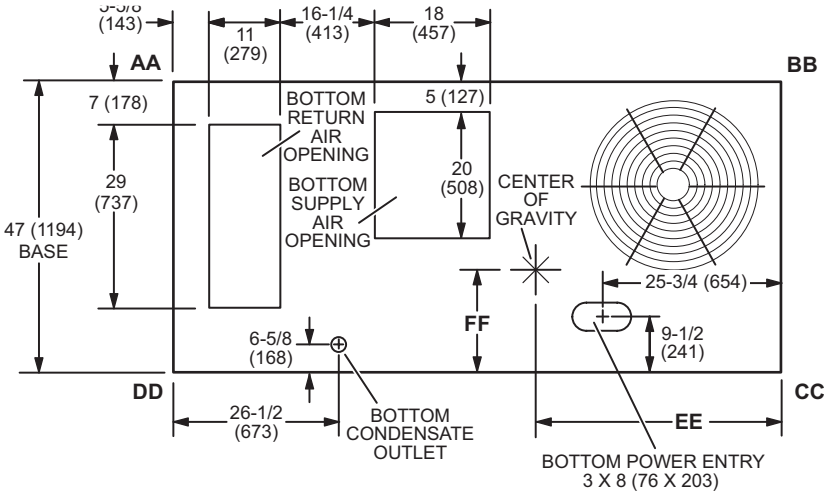

TOP VIEW (Base)

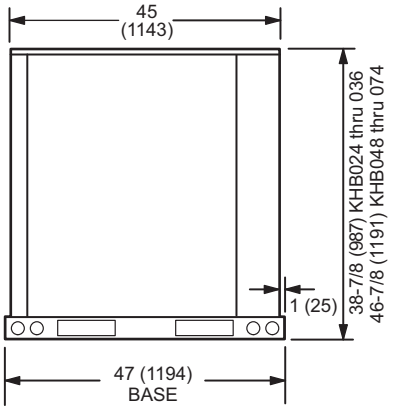

END VIEW

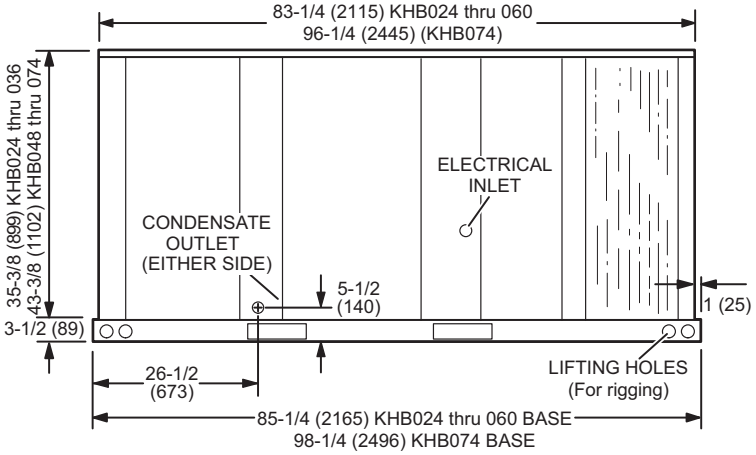

SIDE VIEW

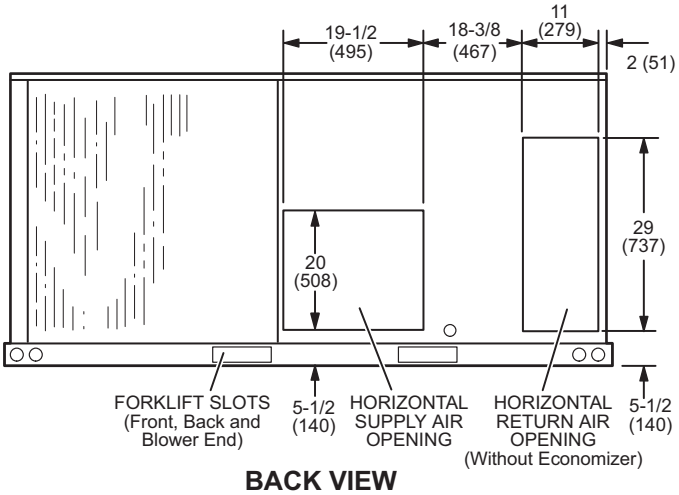

BACK VIEW

OUTDOOR AIR HOOD DETAIL FOR OPTIONAL ECONOMIZER AND BAROMETRIC RELIEF DAMPERS (Downflow Applications)

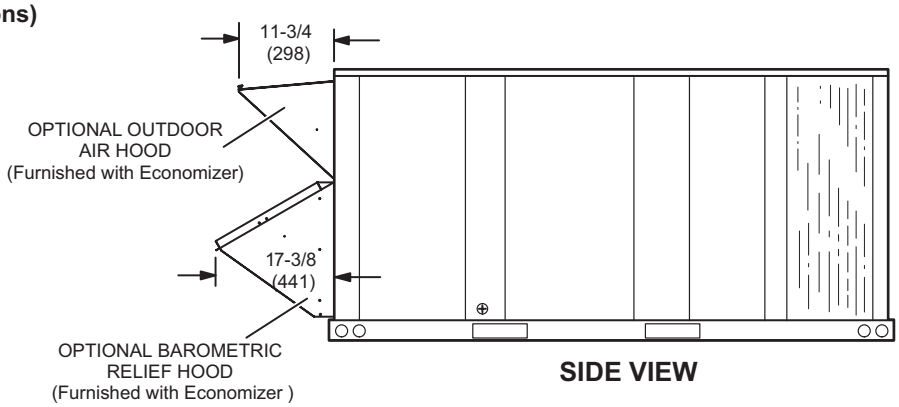

OUTDOOR AIR HOOD FOR ECONOMIZER (Furnished)

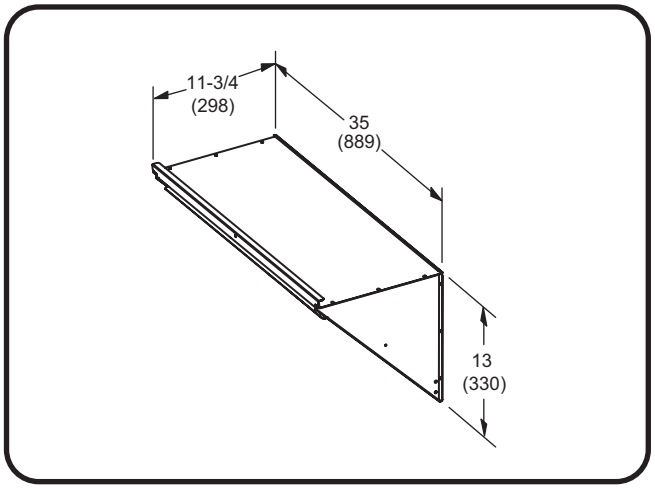

BAROMETRIC RELIEF HOOD FOR ECONOMIZER (Furnished)

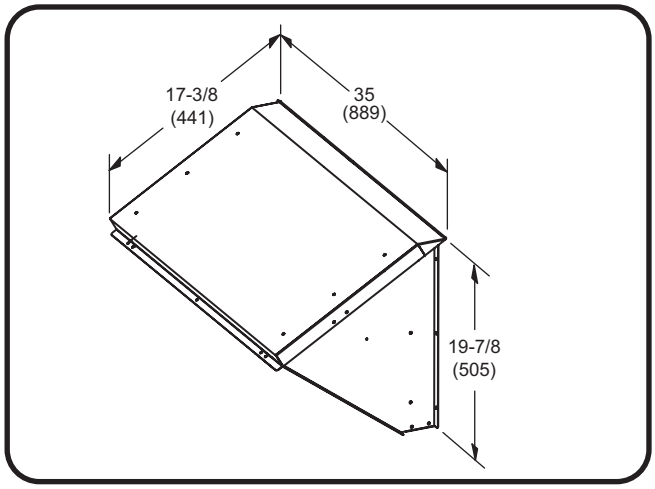

OUTDOOR AIR DAMPER HOOD DETAIL FOR OPTIONAL MANUAL OR MOTORIZED OUTDOOR AIR DAMPERS (Downflow or Horizontal Applications)

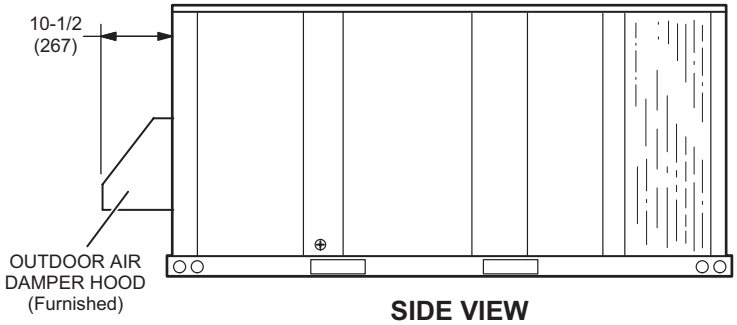

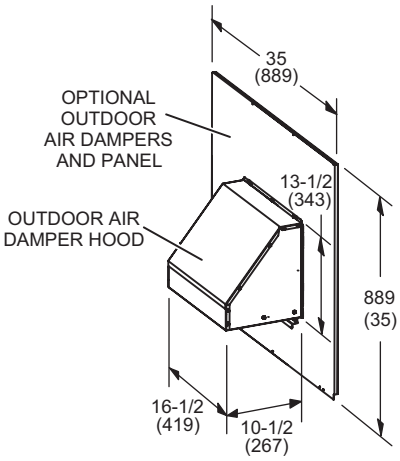

OUTDOOR AIR HOOD DETAIL WITH OPTIONAL ECONOMIZER AND BAROMETRIC RELIEF DAMPERS
(Horizontal Applications)

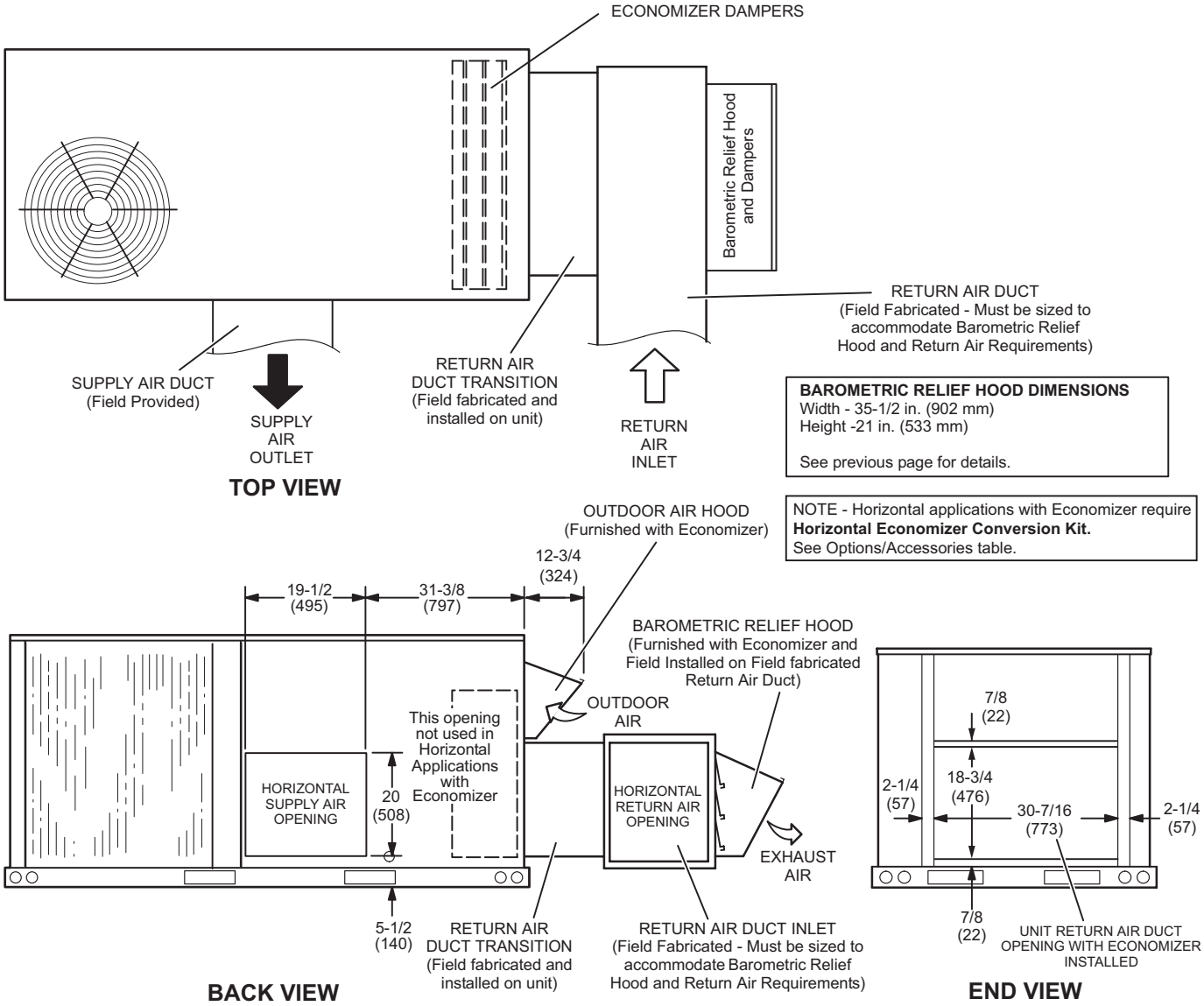

NOTE - Return Air Duct and Transition must be supported.

HYBRID ROOF CURBS - DOUBLE DUCT OPENING - STANDARD AND FULL PERIMETER

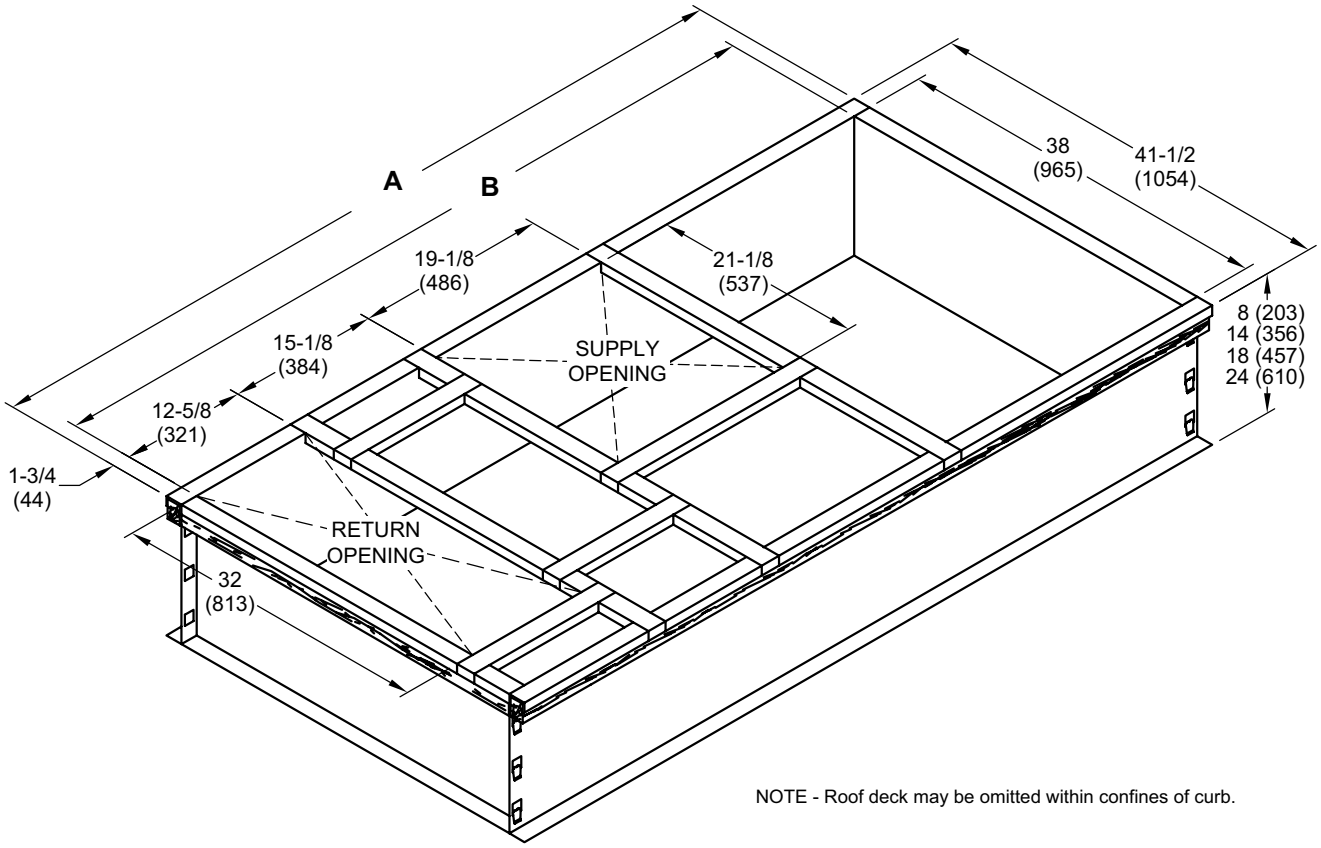

NOTE - Roof deck may be omitted within confines of curb.

TYPICAL FLASHING DETAIL FOR ROOF CURB

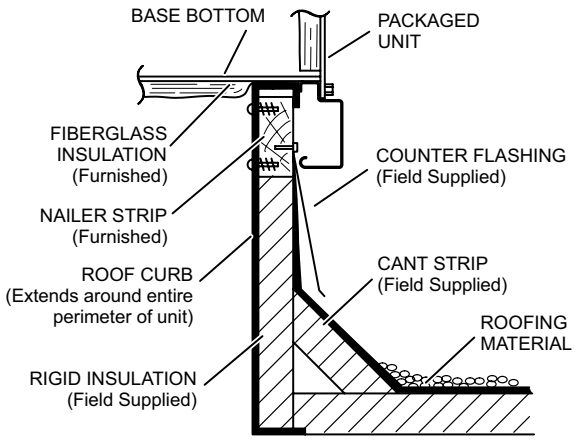

DETAIL ROOF CURB

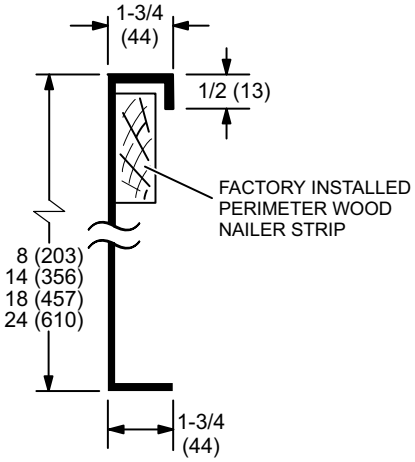

Model No.	A		B	
	in.	mm	in.	mm
Standard - 024, 030, 036, 048, 060, [1] 072, [1] 074	79-3/4	2026	76-1/4	1937
Full Perimeter - 072, 074	92-3/4	2356	89-1/4	2267

[1] 072 and 074 models can be used on smaller 79-3/4 in. (2026 mm) roof curbs (not full perimeter) with 15-3/4 in. (400 mm) overhang at condenser end of unit. See dimension drawing on page 54.

ADJUSTABLE PITCH CURBS - DOUBLE DUCT OPENING

79-3/4 (2026)
76-1/4 (1937)
38 (965)
41-1/2 (1054)
19-1/8 (486)
21-1/8 (537)
15-1/8 (384)
12-5/8 (321)
14 (356)
SUPPLY OPENING
RETURN OPENING
32 (813)
FACTORY INSTALLED PERIMETER WOOD NAILER STRIP
BOTTOM CURB ASSEMBLY

NOTE - Maximum slope pitch is 3/4 in. per 1 foot (19 mm per 305 mm) in any one direction.

TYPICAL FLASHING DETAIL FOR ROOF CURB

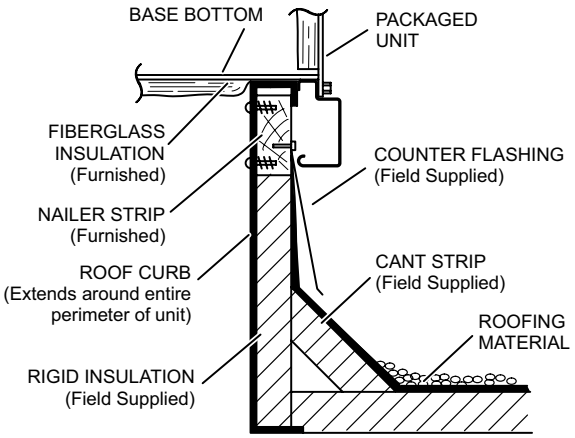

DETAIL ROOF CURB

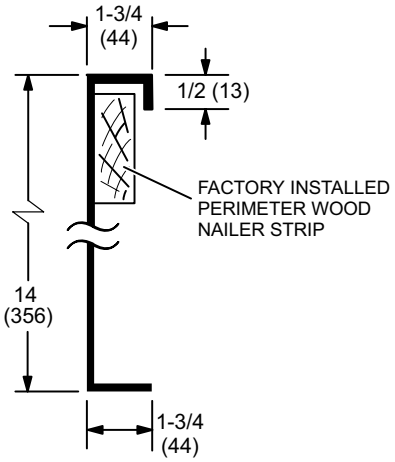

072 AND 074 MODELS - SHOWING OVERHANG ON SMALLER 79-3/4 INCH LENGTH ROOF CURBS (Not Full Perimeter)

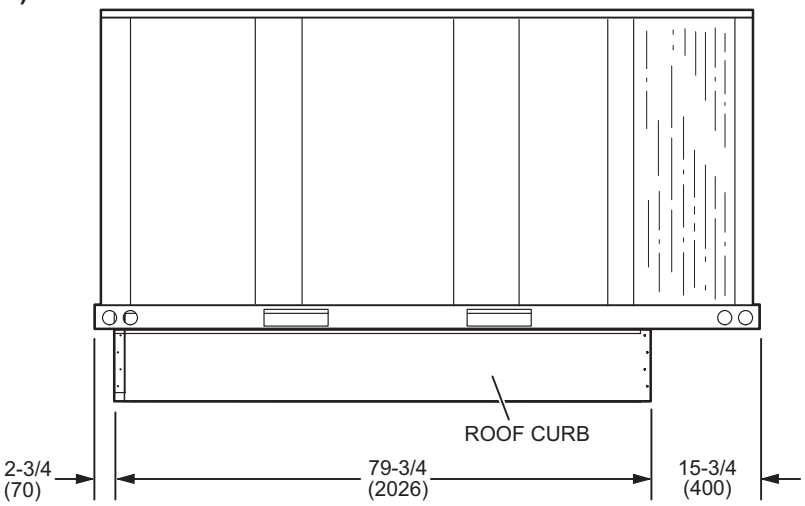

SIDE VIEW

TRANSITIONS

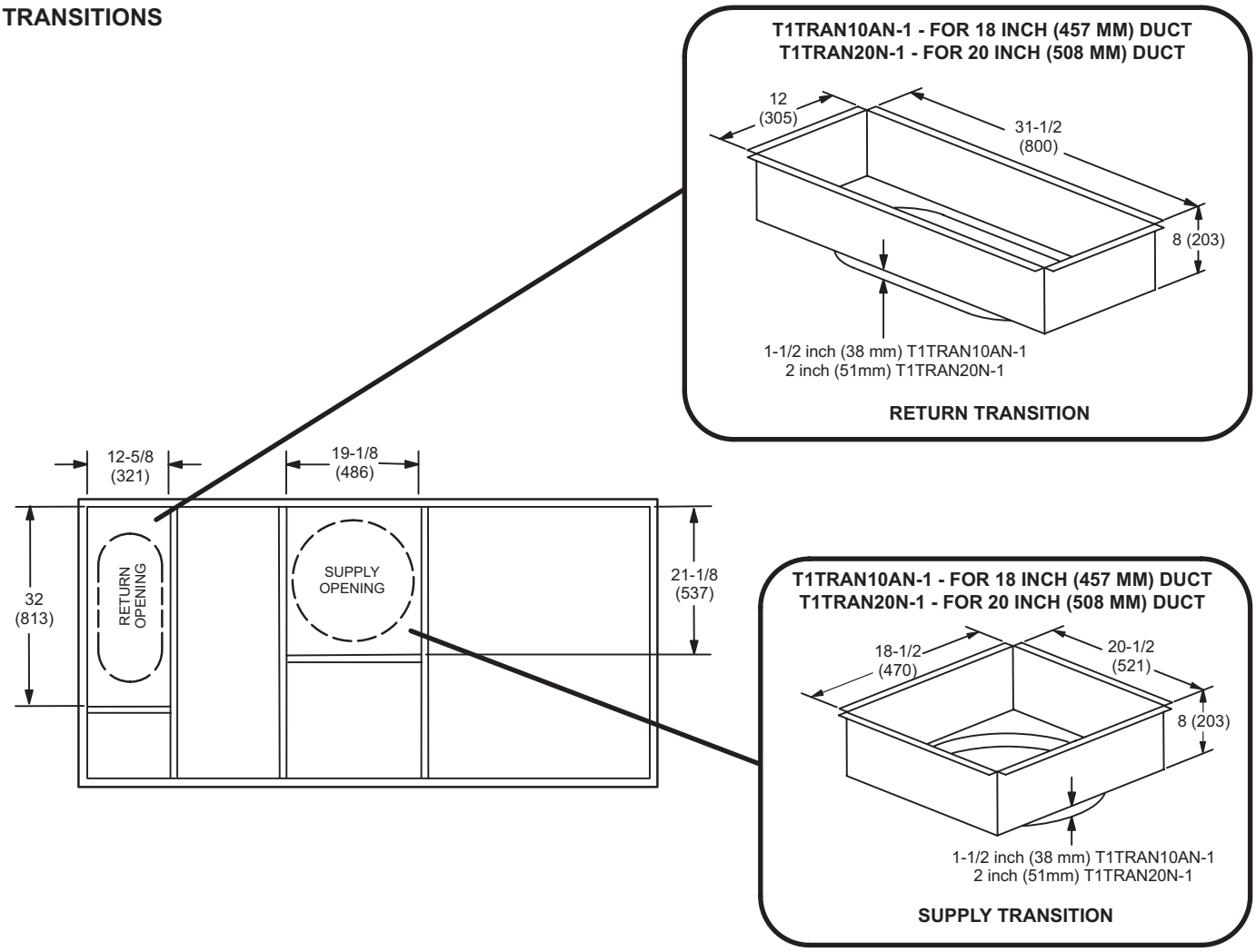

COMBINATION CEILING SUPPLY AND RETURN DIFFUSERS

STEP-DOWN CEILING DIFFUSER

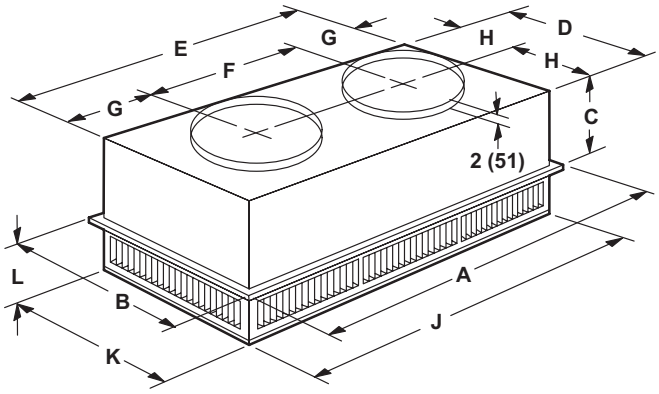

Model Number		RTD9-65S	RTD11-95S
A	in.	47-5/8	47-5/8
	mm	1159	1159
B	in.	23-5/8	29-5/8
	mm	600	752
C	in.	11-3/8	14-3/8
	mm	289	365
D	in.	21-1/2	27-1/2
	mm	546	699
E	in.	45-1/2	45-1/2
	mm	1156	1158
F	in.	22-1/2	22-1/2
	mm	572	572
G	in.	11-1/2	11-1/2
	mm	292	292
H	in.	10-3/4	13-3/4
	mm	273	349
J	in.	45-1/2	45-1/2
	mm	1156	1156
K	in.	21-1/2	27-1/2
	mm	546	699
L	in.	7-1/8	8-1/8
	mm	181	206
Duct Size	in.	18 round	20 round
	mm	457 round	508 round

FLUSH CEILING DIFFUSER

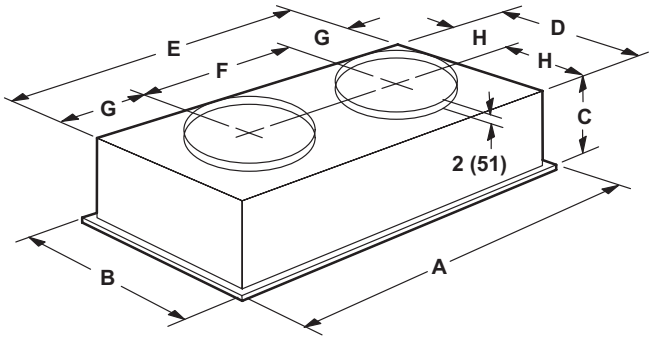

Model Number		FD9-65S	FD11-95S
A	in.	47-5/8	47-5/8
	mm	1159	1159
B	in.	23-5/8	29-5/8
	mm	600	752
C	in.	13-1/2	16-5/8
	mm	343	422
D	in.	21	27
	mm	533	686
E	in.	45	45
	mm	1143	1143
F	in.	22-1/2	22-1/2
	mm	572	572
G	in.	11-1/4	11-1/4
	mm	286	286
H	in.	10-1/2	13-1/2
	mm	267	343
Duct Size	in.	18 round	20 round
	mm	457 round	508 round

REVISIONS

Section	Description
Options / Accessories	New Diffuser model and catalog numbers
Weight Data	New diffuser weights

Visit us at www.lennox.com

For the latest technical information, www.lennoxcommercial.com

Contact us at 1-800-4-LENNOX

NOTE - Due to Lennox' ongoing commitment to quality, Specifications, Ratings and Dimensions subject to change without notice and without incurring liability.
Improper installation, adjustment, alteration, service or maintenance can cause property damage or personal injury.
Installation and service must be performed by a qualified installer and servicing agency.

©2016 Lennox Industries, Inc.