LENNOX®

G11E-200V UP-FLO CONSERVATOR® GAS FURNACE

200,000 Btuh Input — BELT DRIVE BLOWER
Add-on Cooling — 3-1/2 Thru 5 Nominal Tons

- **DURACURVE® Heat Exchanger with LENNOX DURAGLASS II® Coating**
- **Sized For Air Conditioning**
- **Hammock Filter**
- **Continuous Port Steel Burners**
- **Complete Service Access**
- **Automatic HEATSAVER™ Vent Damper Option**
- **Electronic POWERLITE™ Pilot Ignition**
- **Crisp Cabinet Lines**
- **Return Air Choice**

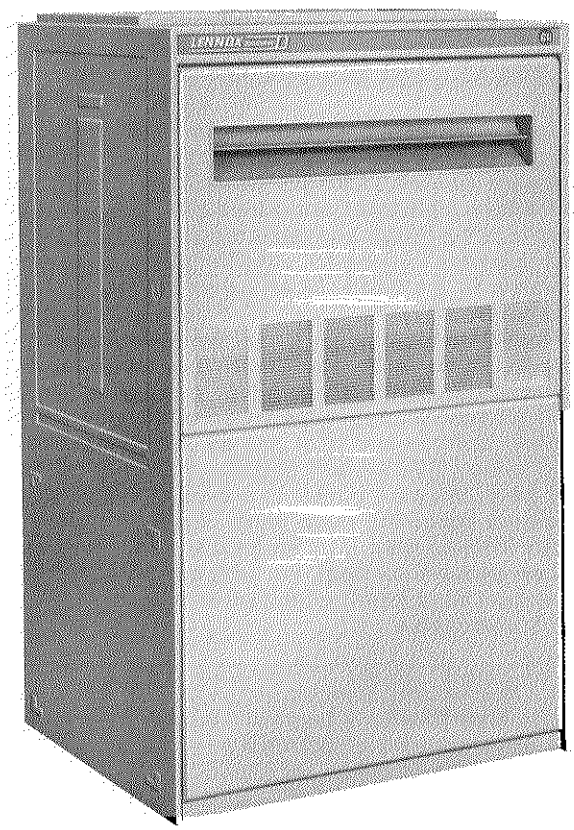

Typical Application

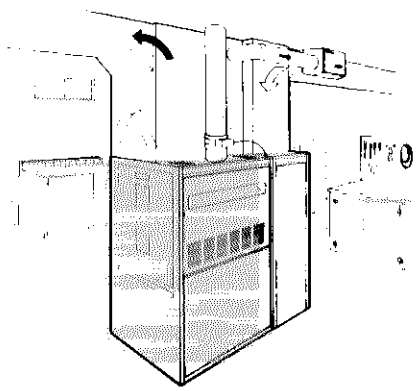

Basement Installation
With cooling coil, return air cabinet and power humidifier.

CONSERVATOR Gas Furnace Features Dependability, Application Choice and Energy Savings

The Lennox gas fired up-flo G11E-200V furnace is equally applicable to residential and small business or commercial installations. The low height, quietness of operation and ultra modern cabinet design permits installation in a recreation or family room, basement, utility room or closet.

The low height of the furnace, due to the expert design features of the DURACURVE heat exchanger leaves plenty of room to add a cooling coil on top of the furnace cabinet. Attractive optional return air cabinet is available to simplify return air duct connection to the furnace cabinet. The matching return air cabinet may be installed on either side of the furnace. The high-style furnace and return air cabinet is trim and sheer looking with a furniture finish of baked-on enamel.

Furnace is equipped with energy and cost saving automatic electronic pilot ignition system. Pilot flame is on only during furnace operating cycle. No need to shut off pilot during summer air conditioning season. Also available, as an option, is a heat and energy saving automatic flue vent damper assembly for field installation in the furnace vent pipe. Vent damper prevents the escape of heated air up the chimney after burners have shut off and also minimizes chimney infiltrations during furnace off cycle.

Lennox direct expansion evaporator unit and matching condensing unit, electronic air cleaner and power humidifier can be added to the furnace for an all season Total Comfort installation. Quiet operating blower has sufficient capacity to handle air conditioning air volume requirements.

The G11E-200V furnace is design certified by A.G.A. Laboratories. In addition, unit has been rated and tested according to Department of Energy (D.O.E.) test procedures and Federal Trade Commission (F.T.C.) labeling regulations in the Lennox Research Laboratory. Unit is test operated on the assembly line before shipment insuring proper operation. Blower data is from unit tests conducted in the Lennox Research Laboratory air test chamber.

Unit is shipped completely factory assembled (except for blower motor, motor pulley and belt) with all controls installed, piped and wired. Installer has only to locate unit, mount thermostat, make duct, vent, gas supply and electrical connections to complete a low cost installation.

NOTE — Specifications, ratings and dimensions subject to change without notice.

FEATURES

Lennox DURACURVE Heat Exchanger with DURAGLASS II Coating — Lennox developed heat exchanger eliminates fatigue failure, ticking resonance and cleanability problems. In the unique design of this heat exchanger the sides of the clam section form a flue restriction zone comprised of sections of two concentric cylinders. As the sides grow they expand and move, but in the same direction and at the same rate. The result is perfect combustion, proper venting and absolute freedom of movement for the metal. Design of heat exchanger will allow cleaning with a flexible cleaning tool. Compact construction permits low overall design of the furnace cabinet and smooth lines give minimum resistance to air flow. Life cycle test insures long life of heat exchanger. To insure maximum service life the heat exchanger is coated with Lennox DURAGLASS II. It is a porcelainized coating fused to the entire heat exchanger, inside and out. It protects against combustion acids, shrugs off moisture and corrosion, will not burn off, oxidize or peel. In addition, it is a good radiator of heat, helps to spread heat evenly over the heating surfaces for maximum efficiency.

Rugged Cabinet — Constructed of heavy gauge cold rolled steel. Cabinet surface temperatures are low due to interior metal liners on each side of the cabinet and foil covered fiberlgass insulation on vestibule panel and on back panel. Draft diverter is DURAGLASS coated to resist corrosion and provide maximum service life. Leveling bolts and nuts are furnished and holes are provided in base to level unit. Complete service access is accomplished by removing furnace and blower access panels. Safety interlock switch, located on wiring junction box, automatically cuts the power to unit when blower access panel is removed. Blower and filter assembly may be completely removed from unit for service. Gas piping and electrical inlets are provided in both sides of cabinet. Return air entry is possible on either side or bottom of cabinet. Matching add-on Lennox up-flo evaporator coils (3-1/2 thru 5 nominal tons) are available for all season applications.

Cabinet and Blower Paint Process — The cabinet and blower have a special "Electro Deposition" process paint finish. Metal preparation consists of a special 6 station wash metal process. 1 — Spray application of a strong alkaline cleaner. 2 — Spray water rinse. 3 — Spray application of a corrosion resistant, paint bonding iron phosphate compound. 4 — Spray water rinse. 5 — Spray application of a chromic acid. 6 — Spray rinse with "de-ionized" water. After the final rinse the cabinet and blower enter a drying oven and are completely dried before receiving the paint finish. They are then completely submerged in the paint vats where the electroplating paint finish is applied. The paint solution and metal are given opposite electrical charges resulting in positive adhesion and even coverage of the paint to the metal surfaces. This process completely covers the entire surfaces, inside and out, including the edges of assembly holes. Following the paint process the finished components enter a high temperature oven where the bonded finish is baked on.

Steel Burners — Each burner has four rows of practically continuous ports which result in quiet and clean combustion. A crossover igniter of actual burner ports, perpendicular to the main burners, carries a positive flame from burner to burner to achieve quiet and sure ignition.

Sulky Blower — Unit is equipped with belt drive sulky blower. All moving parts are mounted on a rigid steel frame secured to blower housing on resilient rubber mounts assuring quiet operation. Motor mount design allows easy belt adjustment and pulley alignment. Blower wheel is statically and dynamically balanced. Adjustable motor pulley permits various speed adjustments. Bearings are rubber enlosed, self aligning, solid bronze grooved and graphite filled. Large grease cups are furnished for lubrication.

Transformer — 30 VA control transformer is furnished as standard equipment and is factory installed in wiring junction box.

Wiring Junction Box — Power supply and thermostat wiring connections are made at the wiring junction box. Conveniently located in blower compartment for easy access. Provisions have been made in the box for additional wiring connections required for power humidifier and electronic air cleaner. See wiring diagram inside blower compartment door.

Fan and Limit Controls — Factory installed and accurately located fan and limit controls give protection against abnormal operating conditions and controls blower operation. Continuous blower operation may be accomplished by adjusting the fan control to the minimum temperature setting.

Blower Cooling Relay — Furnished as standard equipment and factory installed in the wiring junction box. Relay activates blower operation during cooling cycle.

Automatic Gas Controls & Electronic Pilot Ignition — Silent operating gas controls provide 100% safety shut off. 24V redundant combination gas control valve combines automatic safety pilot, pilot and bleed gas filtration, automatic electric valve (dual) and gas pressure regulation into a compact combination control. Additionally, manual main shut-off valve is included. Dual valve design provides double assurance of 100% close off of gas to the pilot and main burners on each heating cycle. Solid-state electronic direct spark igniter provides positive ignition of pilot burner on each operating cycle. Pilot gas is ignited and burns during each running cycle (intermittent pilot) of the furnace. Main burners and pilot gas are extinguished during the off cycle. This system permits main gas valve to open only when the pilot burner is proven to be lit. Should a loss of flame occur the main valve closes and the pilot spark recurs immediately. Pilot ignition is a fully automatic operation on demand for heat. For LPG specified models a field conversion kit is required and must be ordered extra. See specification table.

Large Air Filter — Unit is equipped with hammock wrap around type filter. Media is one inch thick oil impregnated fiberglass. Filter mounting rack design provides quick and simple replacement of media for servicing.

Thermostat (Not Furnished) — Heating thermostat is optional equipment and must be ordered extra. For all season applications heating-cooling thermostat is available with the condensing unit.

Automatic HEATSAVER Vent Damper Assembly (Optional) — Available as optional equipment and must be ordered extra. Energy saving automatic vent damper field installs in the furnace vent pipe. Assembly consists of: damper actuator (24 volt), vent pipe collar with vent damper and round to oval transition fitting. The damper actuator electrically interlocks with the gas ignition system. The vent damper must be fully open before the spark ignition is energized and the gas valve opens. Timing in the actuator allows continued venting thru the vent pipe after the gas is shut off but before the damper completely closes. The damper actuator opens and closes the vent damper upon demand of the room thermostat. Damper is A.G.A. design certified in compliance with ANS1 Z21.47 — 1978. See specification table for model number.

SPECIFICATIONS

Model Number		G11E-200V
Input Btuh		200,000
†Output Btuh		153,000
†A.F.U.E.		68.6%
†A.F.U.E. — With Vent Damper		78.5%
Vent size (in.)		7 oval
High static approved by A.G.A. (in. wg.)		.50
Gas piping size (I.P.S. in.)	Natural	3/4
	*LPG	3/4
Blower wheel nominal diam. x width (in.)		12 x 12
Blower pulley bore x diam. (in.)		1 x 7 — A
Blower motor & drives (shipped separately)		see drive kit selection table
Net filter area (sq. ft.) & cut size (in.)		9.7 — 52 x 28 x 1
Tons of cooling that can be added		3-1/2, 4 or 5
Shipping weight (lbs.)		311
**Number of packages in shipment		2
Electrical characteristics		120 volts — 60 hertz — 1 phase
(Optional) Return Air Cabinet	Model No.	RA10-16-53
	Shipping weight (lbs.)	56
Vent Damper Assembly — Optional		AFD7
*LPG Kit — Optional		LB-33151CC

†Annual Fuel Utilization Efficiency based on D.O.E. test procedures and according to F.T.C. labeling regulations.
*LPG kit must be ordered extra for field conversion.
**Package 1 consists of furnace and driven pulley. Package 2 consists of blower motor, motor pulley and belt.

A.G.A. INSTALLATION CLEARANCES

Sides	1 inch
Rear	1 inch
Top	1 inch
Front	9 inches
Floor	Combustible
*Vent	*6 inches

*This is clearance to all vent pipes except type "B". Type "B" vent clearance is as listed by U.L.
NOTE — Air for combustion and ventilation must conform to the methods outlined in American National Standard (ANSI-Z223.1) National Fuel Gas Code.

HIGH ALTITUDE DERATE

If the heating value of the gas does not exceed values listed in the table, derating of the unit is not required. Should the heating value of the gas exceed the table values, or if the elevation is greater than 6,000 feet above sea level it will be necessary to derate the unit. Lennox requires that derate conditions be 4% per thousand feet above sea level. Thus at an altitude of 4000 feet, if the heating value of the gas exceeds 1000 Btu/ft³, unit will require a 16% derate.

Elevation Above Sea Level (feet)	Maximum Heating Value (Btu/ft³)
5001 — 6000	900
4001 — 5000	950
3001 — 4000	1000
2001 — 3000	1050
Sea Level — 2000	1100

BLOWER DATA

DRIVE KITS

Usage	Drive Kit Model No.	Motor hp	Motor Pulley (in.) & Groove	**Blower Pulley (in.) & Groove	*Rpm Range	Belt	Shipping Weight (lbs.) 1 Package
Heating	DK 1/3-5 (BM-5790)	1/3	1/2 x 3-3/4 — OA	1 x 7 — A	590 — 835	4L410	17
3-1/2 & 4 tons	DK 1/2-6 (BM-5791)	1/2	5/8 x 4-1/8 — OA	1 x 7 — A	690 — 935	4L420	22
5 tons	DK 3/4-7 (BM-5792)	3/4	5/8 x 4-1/8 — OA	1 x 7 — A	690 — 935	4L420	27
	DK-2007 (BM-7523)	†1	5/8 x 4-3/4 — OA	1 x 7 — A	840 — 1085	4L430	38

*At 1725 rpm motor speed. †Fan relay included in kit.
**Factory installed in furnace package and not included in drive kit.

G11E-200V BLOWER PERFORMANCE

Air Volume (Cfm)	STATIC PRESSURE EXTERNAL TO UNIT (Inches Water Gauge)																							
	0		.10		.20		.30		.40		.50		.60		.70		.80		.90		1.00	
	RPM	BHP	RPM	BHP	RPM	BHP	RPM	BHP	RPM	BHP	RPM	BHP	RPM	BHP	RPM	BHP	RPM	BHP	RPM	BHP	RPM	BHP
1400	460	.23	530	.29	600	.35	665	.41	725	.46	775	.51	830	.57	880	.66	920	.72	965	.79	1005	.86
1600	520	.31	590	.38	650	.43	715	.49	765	.56	815	.62	865	.71	910	.79	955	.86	995	.93	1035	1.0
1800	580	.40	650	.46	705	.53	760	.61	810	.69	860	.78	905	.86	950	.94	990	1.02	1030	1.09	---	---
2000	650	.51	705	.58	760	.67	815	.77	860	.86	905	.95	950	1.03	990	1.10	---	---	---	---	---	---
2200	715	.65	765	.74	820	.86	870	.96	910	1.04	950	1.12	---	---	---	---	---	---	---	---	---	---
2400	780	.85	825	.95	875	1.07	915	1.14	---	---	---	---	---	---	---	---	---	---	---	---	---	---
2600	840	1.02	885	1.13	---	---	---	---	---	---	---	---	---	---	---	---	---	---	---	---	---	---

NOTE — All cfm is measured external to the furnace with the air filter in place.

DIMENSIONS (inches)

Gas Furnace

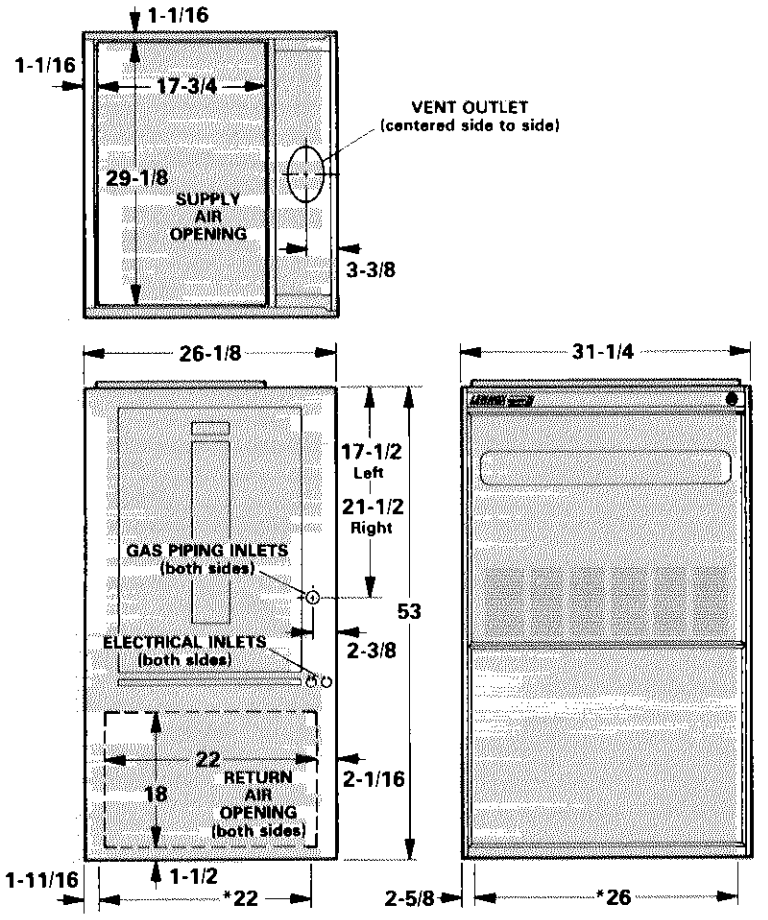

*Bottom Return Air Knockout.

Return Air Cabinet

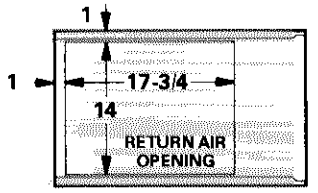
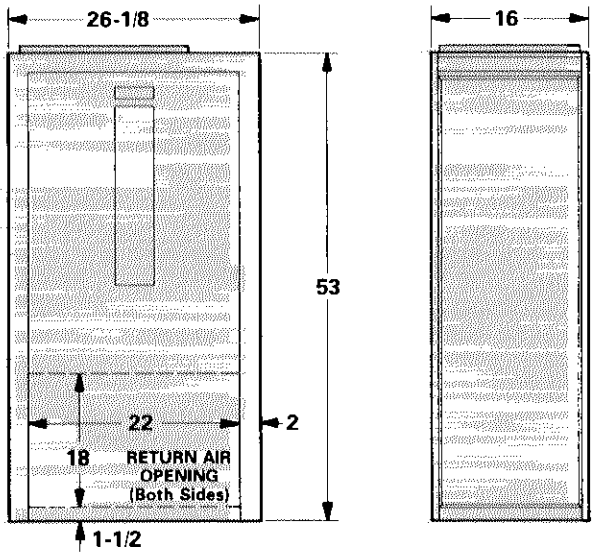
NOTE — Return air cabinet shipped knocked down and must be field assembled.