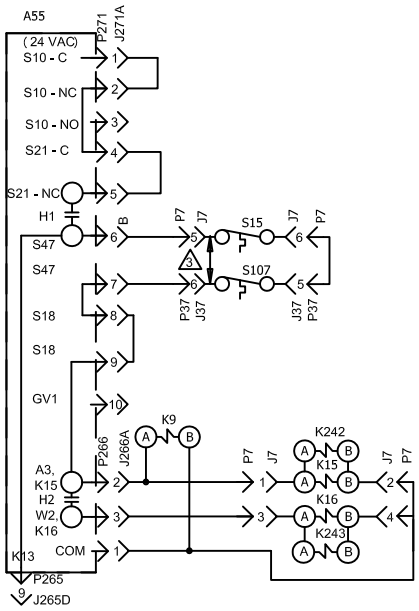

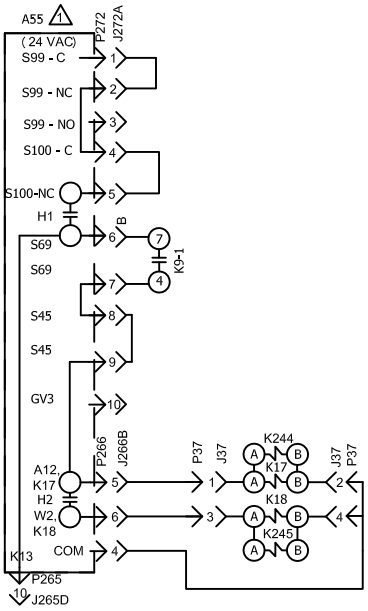

KEY	DESCRIPTION
A55	PANEL, MAIN
F3	FUSE, ELECTRIC HEAT 1
F4	FUSE, UNIT
F42	FUSE, ELECTRIC HEAT 2
F43	FUSE, ELECTRIC HEAT 3
F44	FUSE, ELECTRIC HEAT 4
F45	FUSE, ELECTRIC HEAT 5
F46	FUSE, ELECTRIC HEAT 6
F49	FUSE, ELECTRIC HEAT 7
F50	FUSE, ELECTRIC HEAT 8
HE1	ELEMENT, ELECTRIC HEAT 1
HE2	ELEMENT, ELECTRIC HEAT 2
HE3	ELEMENT, ELECTRIC HEAT 3
HE4	ELEMENT, ELECTRIC HEAT 4
HE5	ELEMENT, ELECTRIC HEAT 5
HE6	ELEMENT, ELECTRIC HEAT 6
HE7	ELEMENT, ELECTRIC HEAT 7
HE10	ELEMENT, ELECTRIC HEAT 10
HE11	ELEMENT, ELECTRIC HEAT 11
HE12	ELEMENT, ELECTRIC HEAT 12
HE13	ELEMENT, ELECTRIC HEAT 13
HE14	ELEMENT, ELECTRIC HEAT 14
K9,-1	RELAY, HEATING
K15,-1	CONTACTOR, ELECTRIC HEAT 1,2
K16,-1	CONTACTOR, ELECTRIC HEAT 1A,2A
K17,-1	CONTACTOR, ELECTRIC HEAT 3,4
K18,-1	CONTACTOR, ELECTRIC HEAT 5,6
K242	CONTACTOR, ELECTRIC HEAT 1
K243	CONTACTOR, ELECTRIC HEAT 2
K244	CONTACTOR, ELECTRIC HEAT 3
K245	CONTACTOR, ELECTRIC HEAT 4
S15	SWITCH, LIMIT PRIMARY ELECTRIC HEAT
S20	SWITCH,LIMIT SECONDARY ELECTRIC HEAT 1
S107	SWITCH,PRIMARY ELECTRIC HEAT
S157	SWITCH,LIMIT SECONDARY ELECTRIC HEAT 2
S158	SWITCH,LIMIT SECONDARY ELECTRIC HEAT 3

J/P	DESCRIPTION
7	ELECTRIC HEAT SUB - BASE KIT
37	ELECTRIC HEAT LIMIT
265	CONTACTOR RELAY
266	HEATING CONTROL
271	HEATING SENSORS 1
272	HEATING SENSORS 2

S159	SWITCH, LIMIT SECONDARY ELECTRIC HEAT 4
S160	SWITCH, LIMIT SECONDARY ELECTRIC HEAT 5
S161	SWITCH, LIMIT SECONDARY ELECTRIC HEAT 6
S171	SWITCH, LIMIT SECONDARY ELECTRIC HEAT 7
S172	SWITCH, LIMIT SECONDARY ELECTRIC HEAT 8
TB2	TERMINAL STRIP, UNIT
TB3	TERMINAL STRIP, ELECTRIC HEAT

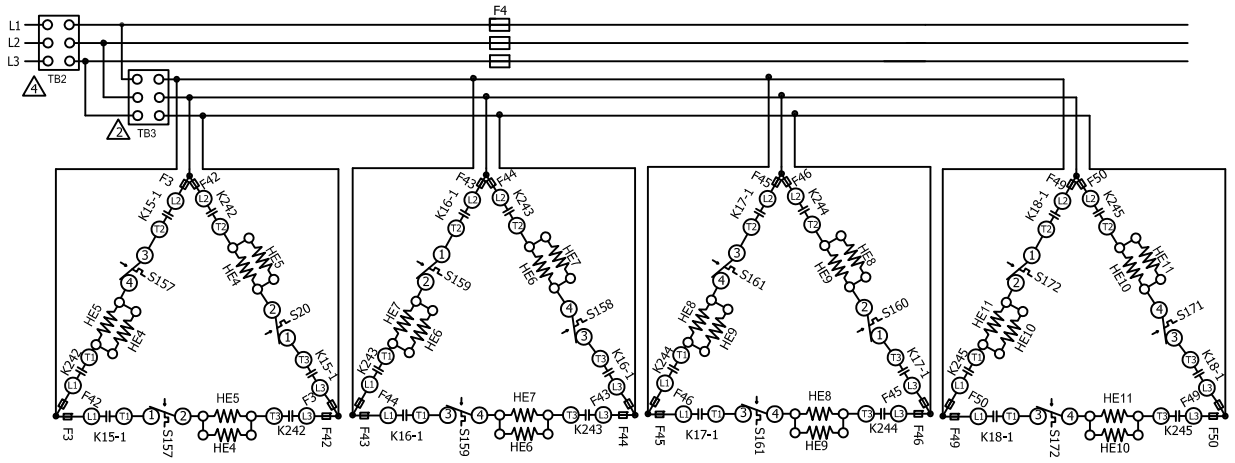

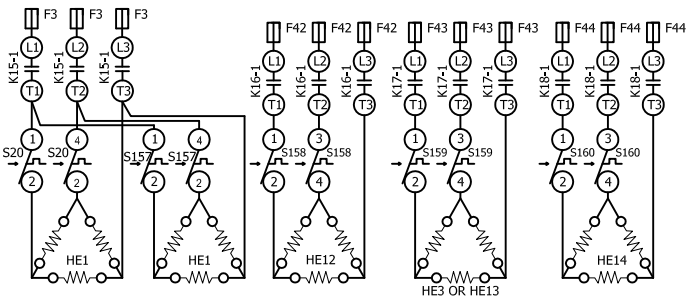

1. NOT USED ON 15 AND 30KW UNITS
2. TB3 IS USED IN SOME UNITS
3. REMOVE PLUG WHEN FIELD INSTALLING ELECTRIC HEAT
4. TB2, CB10 OR S48 MAY BE USED

DESIGNATION	VOLTAGE
Y	208-230/60/3
G	460/60/3
J	575/60/3
M	380-420/50/3

DENOTES OPTIONAL COMPONENTS

D UNITS 300 & 360

KW	HE1	HE2	HE3	HE4	HE5	HE6	HE7	HE8	HE9	HE10	HE11	HE12	HE13	HE14
15	7.5	7.5												
30				15	15									
45	15											7.5	15	7.5
60	15											15	15	15
90	15		15			15	15			15	15			
120				15	15	15	15	15	15	15	15			

12/14

ENERGENCE
WIRING DIAGRAM
537188-04

12/14

HEATING

ELECTRIC HEAT FOR ENERGENCE
E1EH, EHA - 30, 45, 60, 90, 120 - Y

SECTION A

REV 1

Supersedes

New Form No.
537188-04