24V POWER

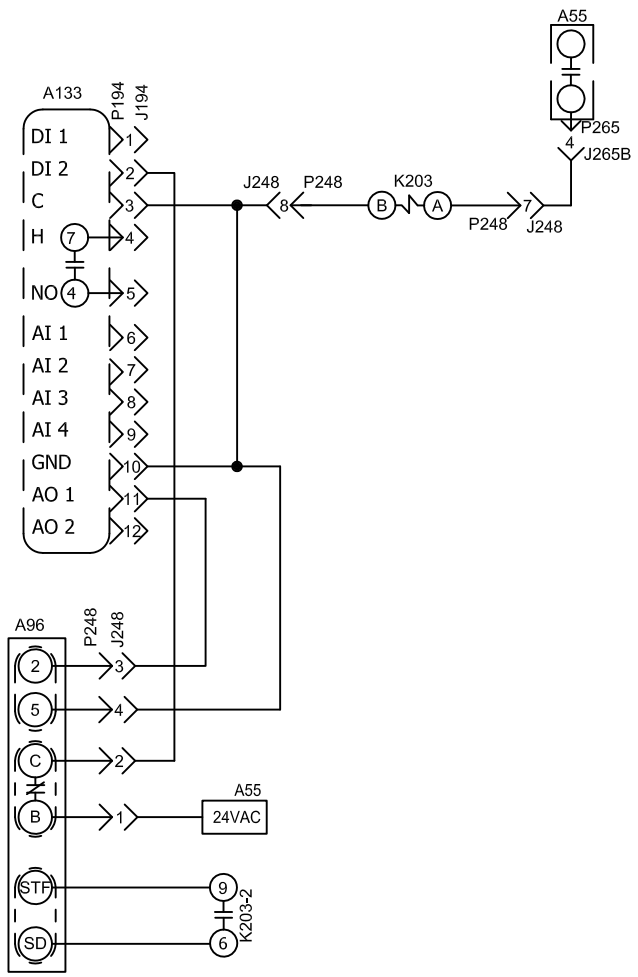

KEY	COMPONENT
A55	PANEL, MAIN
A96	CONTROL INVERTER
A133	CONTROL, GENERAL PURPOSE
B3	MOTOR, BLOWER
K203	RELAY, INVERTER START FWD ROTATION
S48	SWITCH, DISCONNECT
TB13	TERMINAL STRIP, POWER DISTRIBUTION

J/P	JACK/PLUG DESCRIPTION
194	GP CONTROL INPUT, OUTPUT
246	POWER TO VFD
247	POWER, VFD TO MTR
248	VFD CONTROL
265	A55 TO CONTACTORS AND RELAYS

24V COMMON

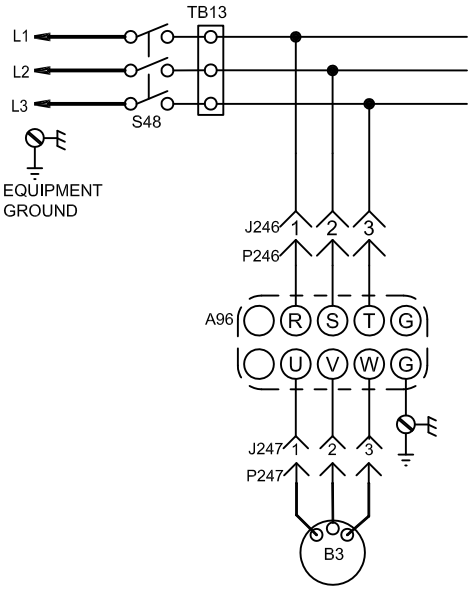

	ENERGENCE C-BOX WIRING DIAGRAM	06/11
COOLING		
MSAV BLOWER NO BYPASS - ALC FOR TARGET		
SECTION B3		REV 0
Supersedes	New Form No. 537392-01	

6/2/2011 11:07:15 AM, 6X10, LENNOX

© 2011 Lennox Commercial