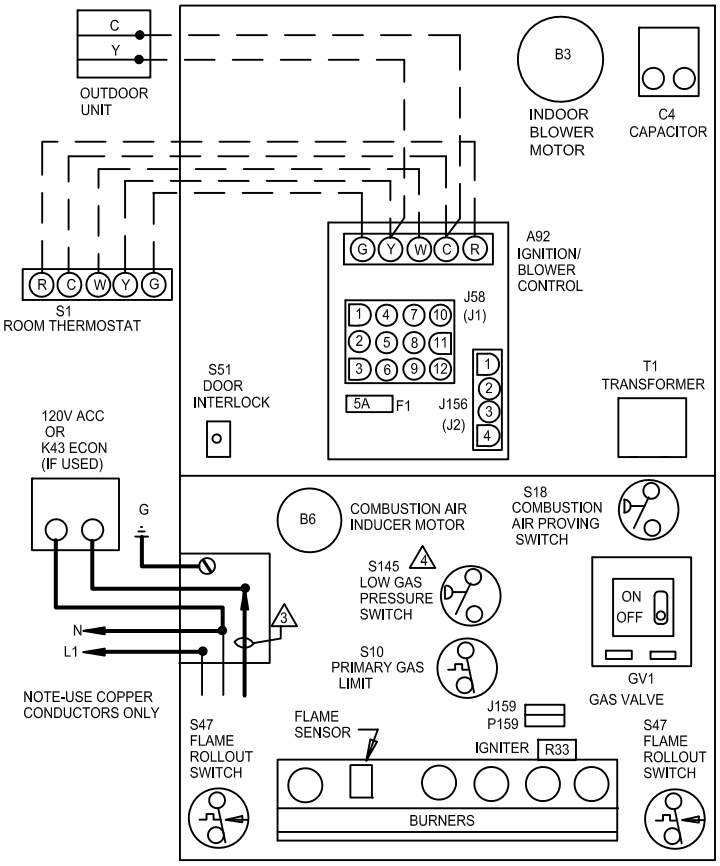

BLOWER SPEED CHART				
UNIT	FACTORY CONNECTED SPEED TAPS			MOTOR SPEEDS AVAIL.
	COOL	HEAT	PARK	
045XP36B	BROWN	RED	BLACK, YELLOW	4
070XP36B	BLACK	BROWN	YELLOW, RED	4
090XP48C	BROWN	YELLOW	BLACK, RED	4
110XP60C	BLACK	BROWN	YELLOW, RED	4
BLOWER SPEED SELECTION				
HI ←			→ LO	
SPEED TAPS	BLACK	BROWN	YELLOW	RED 4

THERMOSTAT HEAT ANTICIPATION SETTINGS

.65 AMP	HONEYWELL VALVE
.50 AMP	WHITE-RODGERS VALVE

	JACKPLUG CHART
J,P58	JACK/PLUG-BURNER CONTROL
J,P156	JACK/PLUG-INDUCER/IGNITER
J,P159	JACK/PLUG-IGNITER

WARNING-
ELECTRIC SHOCK HAZARD, CAN CAUSE INJURY OR DEATH. UNIT MUST BE GROUNDED IN ACCORDANCE WITH NATIONAL AND LOCAL CODES

NOTE-
IF ANY WIRE IN THIS APPLIANCE IS REPLACED, IT MUST BE REPLACED WITH WIRE OF LIKE SIZE, RATING, INSULATION THICKNESS AND TERMINATION

1. IMPORTANT-
TO PREVENT MOTOR BURNOUT, NEVER CONNECT MORE THAN ONE LEAD TO ANY ONE CONNECTION
2. PARK TERMINALS ARE UNPOWERED TERMINALS. ALL UNUSED MOTOR LEADS MUST BE WIRED TO A PARK TERMINAL
3. FIELD SUPPLIED ACC. WIRE
4. S145 IS USED WITH HONEYWELL GAS VALVE WHEN APPLIED IN LP GAS UNITS

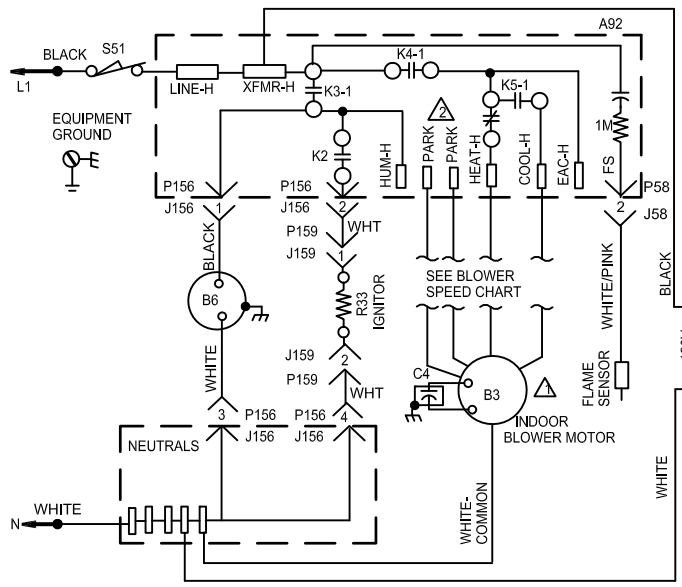

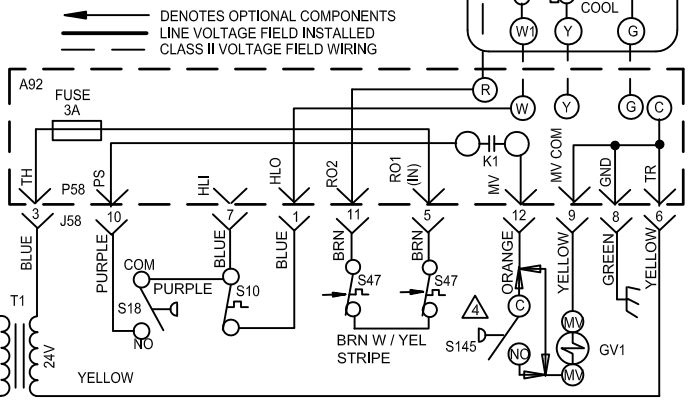

LENNOX HEATING UNITS-GAS

ML193DF045XP36B
ML193DF070XP36B
ML193DF090XP48C
ML193DF110XP60C

Supersedes

1214

Form No. 537553-01

© 2011

Litho U.S.A.