LENNOX®

ENGINEERING DATA

PACKAGED COOLING

CHA16-180-240

15 and 20 ton (52.8 and 70.3 kW)
Net Cooling Capacity - 176,000 and 216,000 Btuh (51.6 to 63.3 kW)
Optional Electric Heat - 15 to 75 kW

Bulletin No. 210299
August 2001
Supersedes June 2000

LISTED

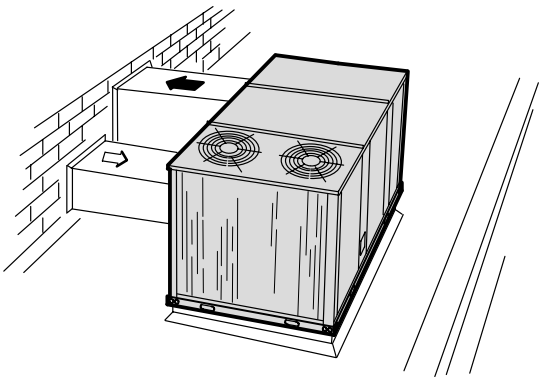

Horizontal (Side) Supply and Return Air Installation
With RMF16 Roof Mounting Frame.

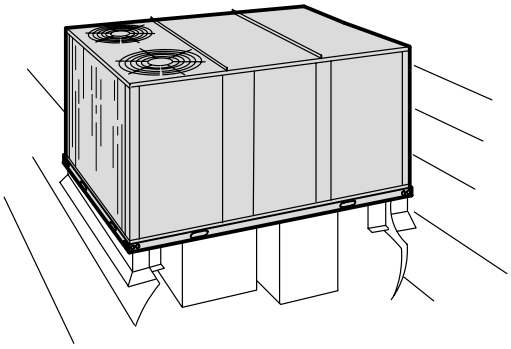

Down-Flow Supply and Return Air Installation
With RMF16 Roof Mounting Frame.

MODEL NUMBER IDENTIFICATION

CHA 16 - 180 - 3HP - 1 Y

Unit Type
CHA = Packaged Cooling Unit

Series

Cooling Capacity Tons (kW)
180 = 15 (52.8)
240 = 20 (70.3)

Blower Motor Horsepower
3hp = 3 hp (2.24 kW)
5hp = 5 hp (3.73 kW)
7.5hp = 7.5 hp (5.60 kW)

Minor Revision Number

Voltage
Y = 208/230v-3 phase-60hz
G = 460v-3 phase-60hz
J = 575v-3 phase-60hz

NOTE - Due to Lennox' ongoing committment to quality, Specifications, Ratings and Dimensions subject to change without notice and without incurring liability.
Improper installation, adjustment, alteration, service or maintenance can cause property damage or personal injury.
Installation and service must be performed by a qualified installer and servicing agency.

FEATURES

Air Flow Choice
- Bottom (down-flow) or horizontal (side) supply and return air.

Approvals
- UL and CSA listed.
- Components bonded for grounding to meet safety standards for servicing required by UL, CSA and National and Canadian Electrical Codes.
- Developed in accordance with ISO 9002 quality standards

ARI Rated and Certified
- Certified in accordance with the ULE certification program, which is based on ARI Standard 340/360-2000.

Cabinet
- Constructed of heavy gauge galvanized steel.
- Powdered enamel paint finish.
- Removable cabinet panels allow service access.
- Base section and cabinet panels exposed to conditioned air lined with thick fiberglass insulation.
- Electrical inlets (bottom power entry) provided in cabinet base and evaporator coil section cabinet panel for wiring entry.
- Control box with low voltage pigtail wiring connections and controls conveniently located for service access.
- Indoor coil condensate drain connection extends outside cabinet for ease of connection.
- Full perimeter base rails with forklift slots and holes for rigging
- Lifting brackets furnished for handling and rigging.

Coil Construction (Evaporator and Condenser)
- Extra large surface area and circuiting of coils provide maximum cooling efficiency, excellent heat transfer and low air resistance.
- Constructed of precisely spaced ripple-edged aluminum fins fitted to copper tubes.
- Fins equipped with collars that grip tubing for maximum contact area.
- Flared shoulder tubing connections and silver soldering provide tight, leakproof joints.
- Long life copper tubing is easy to field service.
- Coil is factory tested under high pressure to insure leakproof construction.

Compressors
- Reciprocating type, hermetically sealed, overload protected (-180 models).
- Copeland Scroll™ type, hermetically sealed (-240 models).

Condenser Coils
- "L" shaped formed coil construction.

Condenser Fans
- Low sound operating levels, PVC coated fan guard furnished.

Condenser Fan Motors
- Overload protected, permanently lubricated, ball bearings

Filters
- Unit is furnished with disposable 2 inch (51 mm) pleated MERV 7 rated filters (Minimum Efficiency Reporting Value based on ASHRAE 52.2).

Refrigeration System
- Consists of: compressors, condenser coil and direct drive fans, evaporator coil and belt drive blower, expansion valves, high capacity driers, full refrigerant charge, freezestats (prevents coil freeze-up during low ambient operation), independent refrigerant circuits (allows staging), low ambient cooling operation down to 30°F (-1°C) without additional controls.

Supply Air Blower
- Belt drive.
- Forward curved blades with double inlet.
- Statically and dynamically balanced.
- Permanently lubricated self aligning sleeve bearings with adjustable pulley.

Supply Air Motor
- Overload protected, equipped with ball bearings.
- Motor mounting base permits quick and simple motor changeover, belt tension adjustment or belt changing.
- Adjustable motor pulley allows for variable speed adjustments.

Warranty
- Limited five years compressors, one year all other covered components.

OPTIONAL ACCESSORIES (MUST BE ORDERED EXTRA)

Item		CHA16-180	CHA16-240
Ceiling Diffusers (Step-Down) - Aluminum grilles, double deflection louvers, large center grille, insulated diffuser box with flanges, hanging rings furnished, interior transition (even air flow), internally sealed (prevents recirculation), adapts to T-bar ceiling grids or plaster ceilings.		RTD11-185 392 lbs. (178 kg)	RTD11-275 403 lbs. (183 kg)
Ceiling Diffusers (Flush) - Aluminum grilles, fixed blade louvers, large center grille, insulated diffuser box with flanges, hanging rings furnished, interior transition (even air flow), internally sealed (prevents recirculation), adapts to T-bar ceiling grids or plaster ceilings.		FD11-185 289 lbs. (131 kg)	FD11-275 363 lbs. (165 kg)
Ceiling Diffuser Transitions (Supply and Return) - Used with diffusers, installs in roof mounting frame, galvanized steel construction, flanges furnished for duct connection, fully insulated.		SRT16-18 75 lbs. (34 kg)	SRT16-24 120 lbs. (54 kg)
Coil Guards - PVC coated steel wire guards to protect outdoor coil. Not used with Hail Guards.		**78L49**	
Control Systems		See Pages 13	
Economizer Dampers (Down-Flow or Horizontal) - Mechanically linked recirculated air and outdoor air dampers, plug-in connections to unit, nylon bearings, stainless steel seals (outdoor dampers), 24 volt fully modulating spring return damper motor, adjustable minimum damper position switch, mixed air sensor, solid-state adjustable outdoor air enthalpy control, 0 to 100% outdoor air adjustable, powdered enamel paint finish. NOTE - Economizer Damper Hood is required and must be ordered separately (see next page). NOTE - Gravity Exhaust Dampers are required for down-flow applications and must be ordered separately (see next page).	Model No. - Net Wt.	REMD16M-18/24 Dampers 95 lbs. (43 kg) (order Economizer Dampers and Damper Hood for complete assembly)	
	Net face area	5.3 sq. ft. (0.49 m^2)	

CONTINUED ON NEXT PAGE ▶

OPTIONAL ACCESSORIES (MUST BE ORDERED EXTRA)

Item			CHA16-180	CHA16-240
Economizer Damper Hood - Required with REMD16M economizer dampers (see above). Installs over outdoor air dampers. Includes cleanable aluminum mesh frame filters.		Model No. - Net Wt.	REMD16M-18/24 Damper Hood **81L45** 36 lbs. (16 kg)	
		No. & Size of Filters	(2) 25 x 25 x 1 in. (635 x 635 x 25 mm)	
Economizer Gravity Exhaust Dampers - Required with REMD16 economizer dampers in down-flow applications. Optional for horizontal applications. Neoprene coated fiberglass dampers. Includes rain hood. Field installs on economizer for down-flow applications. Field installs on return air duct for horizontal supply and return air applications. See dimension drawings.			GED16-18/24 23 lbs. (10 kg)	
Economizer Power Exhaust Fans - For use with REMD16M economizer dampers and GED16 Gravity Exhaust Dampers (see above). Provides pressure relief. Installs between economizer and gravity exhaust dampers (required). Interlocked to run when return air dampers are closed and supply air blowers are operating. Overload protected.	Model No. - Net Wt.		PED16-18/24 - 80 lbs. (36 kg)	
	Dia. - in. (mm) - No. of blades		20 (508) - 5	
	Total air volume - cfm (L/s)		6000 (2830)	
	Motor horsepower (W)		(2) - 1/3 (250)	
	Total Watts input		850	
Economizer Differential Enthalpy Control - For use with economizer dampers, solid-state return air sensor allows selection between outdoor air and return air (whichever has lowest enthalpy).			**54G44**	
Electric Heat - Field installed, helix wound nichrome elements, time delay for element staging, individual element limit controls, may be two-stage controlled, requires optional Fuse Block			See Electric Heat Data Tables, pages 10-11	
Unit Fuse Block - Required for electric heat installation, wiring harness and mounting screws furnished	208/230v -3 phase	3 hp (2.2 kW)	**84L19** (90 amp)	- - -
		5 hp (3.7 kW)	**84L19** (90 amp)	**84L24** (110 amp)
		7.5 hp (5.7 kW)	- - -	**89L37** (125 amp)
	460v - 3 phase	3 hp (2.2 kW)	**84L20** (45 amp)	- - -
		5 hp (3.7 kW)	**84L22** (50 amp)	**84L22** (50 amp)
		7.5 hp (5.7 kW)	- - -	**84L22** (50 amp)
	575v - 3 phase	3 hp (2.2 kW)	**84L21** (30 amp)	- - -
		5 hp (3.7 kW)	**84L23** (35 amp)	**84L25** (40 amp)
		7.5 hp (5.7 kW)	- - -	**84L20** (45 amp)
Hail Guards - Heavy duty field installed coil guard protects coils from damage. Not used with Coil Guards.			**78L48**	
Horizontal Supply and Return Air Kit - Provides duct connection to unit, flanges furnished, hardware furnished, two filler panels furnished for unused air openings in unit base.			HDK16-18/24 55 lbs. (25 kg)	
Low Ambient Controls - Allows unit operation down to 0°F (-17.7°C).			LB-57113BY **(85L42)**	
Outdoor Air Damper/Hood Section - Linked mechanical dampers, 0 to 25% (fixed) outdoor air adjustable, cleanable aluminum mesh frame type filter furnished in hood, section installs on unit for down-flow applications with Outdoor Air Damper Panel Kit (required, must be ordered separately - see below). Damper/Hood section field installs in return air duct for horizontal supply and return air applications, panel kit not required for horizontal applications. Minimum mixed air temperature: Electric heat mode - 30°F (-1°C) Maximum mixed air temperature: Cooling mode - 90°F (32°C)			OAD16-18/24 Damper/Hood **81L38** 52 lbs. (24 kg) (Order Air Damper/Hood and Damper Panel Kit for complete assembly for down-flow applications)	
Outdoor Air Damper Panel Kit (Down-Flow Applications) - Required with OAD16 Damper/Hood. Interchangeable unit panel.			OAD16-18/24 Panel Kit **81L39** 20 lbs. (9 kg)	
Outdoor Air Damper Motorized Damper Kit - 3 position damper actuator, plug-in connection.			**35G21 -** 7 lbs. (3 kg)	
Roof Mounting Frame - Nailer strip furnished, mates to unit, U.S. National Roofing Contractors Approved, shipped knocked down.			RMF16-18/24 154 lbs. (70 kg)	

SPECIFICATIONS

	Model No.	CHA16-180	CHA16-240
Cooling Performance	Nominal Tonnage (kW)	15 (52.8)	20 (70.3)
	Gross cooling capacity - Btuh (kW)	183,200 (53.7)	226,600 (66.4)
	★Total cooling capacity - Btuh (kW)	176,000 (51.6)	216,000 (63.3)
	★Total unit kW	19.5	24.0
	★EER (Btuh/Watts)	9.0	9.0
	★Integrated Part Load Value	9.2	9.2
	Refrigerant Charge Furnished (HCFC-22) Circuit 1	7 lbs. 8 oz. (3.40 kg)	8 lbs. 8 oz. (3.86 kg)
	Circuit 2	7 lbs. 8 oz. (3.40 kg)	8 lbs. 8 oz. (3.86 kg)
	Circuit 3	7 lbs. 8 oz. (3.40 kg)	8 lbs. 8 oz. (3.86 kg)
Condenser Coil	Net face area - sq. ft. (m^2)	29.5 (2.74)	29.5 (2.74)
	Tube diameter - in. (mm)	3/8 (9.5)	3/8 (9.5)
	No. of rows	2	2
	Fins per inch (m)	20 (787)	20 (787)
Condenser Fans	Motor horsepower (W)	3/4 (560)	1 (746)
	Motor rpm	1075	1140
	Motor watts	1200	2050
	Diameter - in. (mm) & No. of blades	(2) 24 (610) - 4	(2) 26 (660) - 4
	Air volume - cfm (L/s)	10,000 (4720)	13,500 (6370)
Evaporator Coil	Net face area - sq. ft. (m^2)	17.9 (1.66)	17.9 (1.66)
	Tube diameter - in. (mm)	3/8 (9.5)	3/8 (9.5)
	No. of rows	3	4
	Fins per inch (m)	14 (551)	14 (551)
	Expansion device type	Thermostatic Expansion Valve	
	Drain connection size mpt - in. (mm)	1 (25.4)	1 (25.4)
Evaporator Blower Motor Selection	Nominal motor output - hp (kW)	3 (2.24) 5 (3.73)	5 (3.73) 7.5 (5.60)
	Max. usable motor output - hp (kW)	3.45 (2.57) 5.75 (4.29)	5.75 (4.29) 8.6 (6.42)
	Motor - RPM range	3 hp 645-845 5 hp 765-965	5 hp 765-965 7.5 hp 895-1120
	Blower wheel nominal diameter x width - in. (mm)	18 x 18 (457 x 457)	18 x 18 (457 x 457)
Filters (furnished)	Type of filter	Disposable, MERV 7 rated, commercial grade, pleated	
	No. & size - in. (mm)	(6) 18 x 24 x 2 (457 x 610 x 51)	(6) 18 x 24 x 2 (457 x 610 x 51)
Shipping Data	Net weight of basic unit - lbs. (kg)	1450 (658)	1575 (714)
	Shipping weight of basic unit - lbs. (kg) 1 Pkg	1620 (735)	1745 (792)
Electrical characteristics		208/230v, 460v or 575v - 60 hertz - 3 phase	

★Certified in accordance with the ULE certification program, which is based on ARI Standard 340/360-93; 95°F (35°C) outdoor air temperature and 80°F (27°C) db/67°F (19°C) wb entering evaporator air. NOTE - Integrated Part Load Value rated at 80°F (27°C) outdoor air temperature.
NOTE - ARI capacity is net and includes evaporator blower motor heat deduction. Gross capacity does not include evaporator blower motor heat deduction.
NOTE - Using total air volume and system static pressure requirements determine from blower performance tables rpm and motor output required. Maximum usable output of motors furnished by Lennox are shown. In Canada, nominal motor output is also maximum usable motor output. If motors of comparable output are used, be sure to keep within the service factor limitations outlined on the motor nameplate.

COOLING RATINGS

NOTE — For Temperatures and Capacities not shown in tables, see bulletin — Cooling Unit Rating Table Correction Factor Data in Miscellaneous Engineering Data section.

CHA16-180 — TWO COMPRESSORS OPERATING

Entering Wet Bulb Temperature	Total Air Volume		Outdoor Air Temperature Entering Outdoor Coil																							
			65°F (18°C)						75°F (24°C)						85°F (29°C)						95°F (35°C)					
			Total Cooling Capacity		Comp Motor kW Input	Sensible To Total Ratio (S/T) Dry Bulb			Total Cooling Capacity		Comp Motor kW Input	Sensible To Total Ratio (S/T) Dry Bulb			Total Cooling Capacity		Comp Motor kW Input	Sensible To Total Ratio (S/T) Dry Bulb			Total Cooling Capacity		Comp Motor kW Input	Sensible To Total Ratio (S/T) Dry Bulb		
	cfm	L/s	kBtuh	kW		75°F 24°C	80°F 27°C	85°F 29°C	kBtuh	kW		75°F 24°C	80°F 27°C	85°F 29°C	kBtuh	kW		75°F 24°C	80°F 27°C	85°F 29°C	kBtuh	kW		75°F 24°C	80°F 27°C	85°F 29°C
63°F (17°C)	4800	2265	127.8	37.5	8.42	.68	.81	.93	122.8	36.0	9.00	.69	.82	.94	117.4	34.4	9.70	.70	.84	.96	111.4	32.6	10.46	.72	.86	.98
	6000	2830	132.8	38.9	8.54	.72	.87	.99	127.6	37.4	9.16	.74	.89	1.00	121.8	35.7	9.88	.75	.91	1.00	115.6	33.9	10.66	.77	.93	1.00
	7200	3400	136.8	40.1	8.62	.77	.93	1.00	131.2	38.5	9.26	.78	.95	1.00	125.4	36.8	10.00	.80	.97	1.00	119.2	34.9	10.82	.83	.99	1.00
67°F (19°C)	4800	2265	136.2	39.9	8.60	.54	.65	.77	130.8	38.3	9.24	.54	.66	.79	124.8	36.6	9.98	.55	.68	.81	118.4	34.7	10.80	.56	.69	.83
	6000	2830	140.6	41.2	8.70	.56	.70	.84	134.8	39.5	9.38	.57	.71	.86	128.6	37.7	10.14	.58	.73	.88	121.8	35.7	10.96	.59	.75	.90
	7200	3400	143.8	42.1	8.76	.59	.75	.90	137.8	40.4	9.46	.60	.76	.92	131.4	38.5	10.24	.61	.78	.94	124.4	36.5	11.08	.62	.81	.96
71°F (22°C)	4800	2265	145.0	42.5	8.78	.41	.52	.63	139.2	40.8	9.50	.41	.53	.64	132.8	38.9	10.30	.41	.53	.65	126.0	36.9	11.16	.42	.54	.67
	6000	2830	149.4	43.8	8.88	.42	.55	.67	143.2	42.0	9.62	.42	.56	.69	136.6	40.0	10.46	.42	.56	.71	129.4	37.9	11.34	.43	.58	.72
	7200	3400	152.6	44.7	8.96	.43	.58	.72	146.0	42.8	9.72	.43	.59	.74	139.0	40.7	10.56	.44	.60	.76	131.8	38.6	11.46	.44	.61	.78

CHA16-180 — ALL COMPRESSORS OPERATING

Entering Wet Bulb Temperature	Total Air Volume		Outdoor Air Temperature Entering Outdoor Coil																							
			85°F (29°C)						95°F (35°C)						105°F (41°C)						115°F (46°C)					
			Total Cooling Capacity		Comp Motor kW Input	Sensible To Total Ratio (S/T) Dry Bulb			Total Cooling Capacity		Comp Motor kW Input	Sensible To Total Ratio (S/T) Dry Bulb			Total Cooling Capacity		Comp Motor kW Input	Sensible To Total Ratio (S/T) Dry Bulb			Total Cooling Capacity		Comp Motor kW Input	Sensible To Total Ratio (S/T) Dry Bulb		
	cfm	L/s	kBtuh	kW		75°F 24°C	80°F 27°C	85°F 29°C	kBtuh	kW		75°F 24°C	80°F 27°C	85°F 29°C	kBtuh	kW		75°F 24°C	80°F 27°C	85°F 29°C	kBtuh	kW		75°F 24°C	80°F 27°C	85°F 29°C
63°F (17°C)	4800	2265	176.5	51.7	14.54	.70	.84	.97	167.6	49.1	15.68	.72	.86	.98	158.5	46.5	16.88	.73	.89	1.00	149.5	43.8	18.06	.75	.91	1.00
	6000	2830	183.2	53.7	14.81	.75	.91	1.00	173.9	51.0	15.98	.77	.94	1.00	164.5	48.2	17.22	.80	.96	1.00	155.3	45.5	18.48	.82	.99	1.00
	7200	3400	188.6	55.3	14.99	.80	.97	1.00	179.3	52.5	16.23	.83	.99	1.00	170.3	49.9	17.55	.85	1.00	1.00	161.3	47.3	18.89	.88	1.00	1.00
67°F (19°C)	4800	2265	187.6	55.0	14.96	.55	.68	.81	178.1	52.2	16.18	.56	.69	.83	168.1	49.3	17.43	.57	.71	.85	158.5	46.5	18.68	.58	.73	.88
	6000	2830	193.3	56.7	15.19	.58	.73	.88	183.2	53.7	16.43	.59	.75	.90	172.9	50.7	17.72	.60	.77	.93	162.7	47.7	18.98	.62	.80	.96
	7200	3400	197.5	57.9	15.35	.61	.78	.94	187.0	54.8	16.61	.62	.81	.97	176.5	51.7	17.93	.64	.83	.99	166.0	48.6	19.22	.66	.86	1.00
71°F (22°C)	4800	2265	199.7	58.5	15.44	.41	.53	.65	189.5	55.5	16.73	.42	.54	.67	179.2	52.5	18.08	.42	.55	.69	169.0	49.5	19.40	.42	.57	.71
	6000	2830	205.3	60.2	15.67	.42	.57	.71	194.5	57.0	16.99	.43	.58	.73	183.7	53.8	18.35	.43	.59	.75	172.9	50.7	19.70	.44	.61	.77
	7200	3400	209.0	61.3	15.82	.44	.60	.76	198.1	58.1	17.17	.44	.61	.78	186.9	54.8	18.55	.45	.63	.81	175.8	51.5	19.90	.46	.65	.84

CHA16-240 — TWO COMPRESSORS OPERATING

Entering Wet Bulb Temperature	Total Air Volume		Outdoor Air Temperature Entering Outdoor Coil																							
			65°F (18°C)						75°F (24°C)						85°F (29°C)						95°F (35°C)					
			Total Cooling Capacity		Comp Motor kW Input	Sensible To Total Ratio (S/T) Dry Bulb			Total Cooling Capacity		Comp Motor kW Input	Sensible To Total Ratio (S/T) Dry Bulb			Total Cooling Capacity		Comp Motor kW Input	Sensible To Total Ratio (S/T) Dry Bulb			Total Cooling Capacity		Comp Motor kW Input	Sensible To Total Ratio (S/T) Dry Bulb		
	cfm	L/s	kBtuh	kW		75°F 24°C	80°F 27°C	85°F 29°C	kBtuh	kW		75°F 24°C	80°F 27°C	85°F 29°C	kBtuh	kW		75°F 24°C	80°F 27°C	85°F 29°C	kBtuh	kW		75°F 24°C	80°F 27°C	85°F 29°C
63°F (17°C)	5760	2720	153.0	44.8	8.64	.69	.82	.94	148.6	43.6	9.64	.69	.83	.95	143.8	42.1	10.76	.70	.84	.97	138.6	40.6	12.04	.71	.85	.98
	7200	3400	158.8	46.5	8.82	.73	.89	1.00	154.0	45.1	9.80	.74	.90	1.00	149.0	43.7	10.92	.76	.92	1.00	143.8	42.1	12.22	.77	.93	1.00
	8640	4080	163.4	47.9	8.96	.78	.95	1.00	158.6	46.5	9.96	.80	.96	1.00	153.6	45.0	11.10	.81	.98	1.00	148.2	43.4	12.40	.83	.99	1.00
67°F (19°C)	5760	2720	162.0	47.5	8.92	.54	.66	.78	157.2	46.1	9.90	.55	.67	.79	152.0	44.5	11.04	.55	.68	.81	146.4	42.9	12.34	.56	.69	.82
	7200	3400	167.0	48.9	9.08	.57	.71	.85	161.8	47.4	10.08	.57	.72	.87	156.6	45.9	11.22	.58	.73	.88	150.8	44.2	12.50	.59	.75	.90
	8640	4080	170.6	50.0	9.22	.60	.76	.92	165.4	48.5	10.20	.61	.78	.94	159.8	46.8	11.36	.62	.79	.95	153.8	45.1	12.66	.62	.81	.97
71°F (22°C)	5760	2720	171.6	50.3	9.26	.41	.53	.64	166.6	48.8	10.26	.41	.53	.64	161.0	47.2	11.40	.42	.54	.65	155.2	45.5	12.70	.42	.54	.67
	7200	3400	176.4	51.7	9.44	.42	.56	.69	171.0	50.1	10.44	.42	.56	.70	165.4	48.5	11.58	.43	.57	.71	159.4	46.7	12.88	.43	.58	.73
	8640	4080	179.6	52.6	9.58	.43	.59	.74	174.0	51.0	10.58	.44	.60	.76	168.2	49.3	11.72	.44	.61	.77	162.0	47.5	13.02	.44	.62	.79

CHA16-240 — ALL COMPRESSORS OPERATING

Entering Wet Bulb Temperature	Total Air Volume		Outdoor Air Temperature Entering Outdoor Coil																							
			85°F (29°C)						95°F (35°C)						105°F (41°C)						115°F (46°C)					
			Total Cooling Capacity		Comp Motor kW Input	Sensible To Total Ratio (S/T) Dry Bulb			Total Cooling Capacity		Comp Motor kW Input	Sensible To Total Ratio (S/T) Dry Bulb			Total Cooling Capacity		Comp Motor kW Input	Sensible To Total Ratio (S/T) Dry Bulb			Total Cooling Capacity		Comp Motor kW Input	Sensible To Total Ratio (S/T) Dry Bulb		
	cfm	L/s	kBtuh	kW		75°F 24°C	80°F 27°C	85°F 29°C	kBtuh	kW		75°F 24°C	80°F 27°C	85°F 29°C	kBtuh	kW		75°F 24°C	80°F 27°C	85°F 29°C	kBtuh	kW		75°F 24°C	80°F 27°C	85°F 29°C
63°F (17°C)	5760	2720	216.1	63.3	16.13	.70	.84	.97	208.4	61.1	18.04	.71	.86	.98	200.3	58.7	20.20	.72	.87	1.00	191.3	56.1	22.68	.74	.90	1.00
	7200	3400	224.0	65.6	16.37	.76	.92	1.00	216.2	63.4	18.31	.77	.93	1.00	207.5	60.8	20.49	.79	.95	1.00	198.8	58.3	22.98	.81	.97	1.00
	8640	4080	230.9	67.7	16.63	.81	.98	1.00	222.8	65.3	18.58	.83	.99	1.00	214.5	62.9	20.77	.85	1.00	1.00	205.8	60.3	23.29	.87	1.00	1.00
67°F (19°C)	5760	2720	228.5	67.0	16.54	.55	.68	.81	220.1	64.5	18.49	.56	.69	.82	211.3	61.9	20.66	.56	.70	.84	202.0	59.2	23.13	.57	.72	.86
	7200	3400	235.3	69.0	16.81	.58	.73	.89	226.6	66.4	18.72	.59	.75	.91	217.3	63.7	20.94	.60	.77	.93	207.5	60.8	23.42	.61	.78	.95
	8640	4080	240.1	70.4	17.01	.62	.79	.96	231.1	67.7	18.96	.63	.81	.97	221.8	65.0	21.12	.64	.83	.99	211.6	62.0	23.63	.65	.85	1.00
71°F (22°C)	5760	2720	242.0	70.9	17.08	.42	.54	.66	233.3	68.4	19.03	.42	.54	.67	224.2	65.7	21.25	.42	.55	.68	214.3	62.8	23.73	.42	.56	.69
	7200	3400	248.5	72.8	17.35	.43	.57	.71	239.5	70.2	19.30	.43	.58	.73	229.6	67.3	21.54	.43	.59	.74	219.4	64.3	24.02	.44	.60	.76
	8640	4080	252.7	74.1	17.56	.44	.61	.77	243.3	71.3	19.50	.44	.62	.79	233.2	68.3	21.72	.45	.63	.81	222.7	65.3	24.23	.45	.65	.83

BLOWER DATA - CHA16-180

BLOWER TABLE INCLUDES RESISTANCE FOR BASE UNIT ONLY WITH DRY INDOOR COIL & AIR FILTERS IN PLACE.
FOR ALL UNITS ADD:
1 - Wet indoor coil air resistance of selected unit.
2 - Any field installed accessories air resistance (electric heat, economizer, duct resistance, diffuser, etc.)
Then determine from blower table blower motor output.
NOTE - In Canada, nominal motor output is also maximum usable motor output - 3 hp (2.24 kW) and 5 hp (3.73 kW).
See Page 8 for wet coil and optional accessory air resistance data.
MINIMUM AIR VOLUME REQUIRED FOR USE WITH OPTIONAL ELECTRIC HEAT
●Units require 4900 cfm (2310 L/s) minimum air with electric heat.

BOLD ITALIC INDICATES FIELD FURNISHED DRIVE

Air Volume cfm (L/s)	STATIC PRESSURE EXTERNAL TO UNIT — Inches Water Gauge (Pa)																					
	.20 (50)		.40 (100)		.60 (150)		.80 (200)		1.00 (250)		1.20 (300)		1.40 (350)		1.60 (400)		1.80 (450)		2.00 (495)	
	RPM	BHP (kW)	RPM	BHP (kW)	RPM	BHP (kW)	RPM	BHP (kW)	RPM	BHP (kW)	RPM	BHP (kW)	RPM	BHP (kW)	RPM	BHP (kW)	RPM	BHP (kW)	RPM	BHP (kW)
4800 (2265)	***455***	***0.90 (0.67)***	***515***	***1.10 (0.82)***	***570***	***1.25 (0.93)***	***620***	***1.45 (1.08)***	670	1.70 (1.27)	715	1.90 (1.42)	760	2.10 (1.57)	800	2.35 (1.75)	840	2.55 (1.90)	880	2.80 (2.09)
4900 (2310)	***460***	***0.95 (0.71)***	***520***	***1.10 (0.82)***	***575***	***1.30 (0.97)***	***625***	***1.55 (1.16)***	675	1.75 (1.31)	720	1.95 (1.45)	760	2.15 (1.60)	805	2.40 (1.79)	845	2.65 (1.98)	880	2.85 (2.13)
5000 (2360)	***470***	***1.00 (0.75)***	***525***	***1.15 (0.86)***	***580***	***1.40 (1.04)***	***630***	***1.60 (1.19)***	675	1.80 (1.34)	720	2.00 (1.49)	765	2.25 (1.68)	805	2.45 (1.83)	845	2.70 (2.01)	885	2.95 (2.20)
5100 (2405)	***475***	***1.05 (0.78)***	***530***	***1.25 (0.93)***	***585***	***1.45 (1.08)***	***635***	***1.65 (1.23)***	680	1.85 (1.38)	725	2.10 (1.57)	770	2.35 (1.75)	810	2.55 (1.90)	850	2.80 (2.09)	885	3.05 (2.28)
5200 (2455)	***480***	***1.10 (0.82)***	***535***	***1.30 (0.97)***	***590***	***1.50 (1.12)***	***640***	***1.70 (1.27)***	685	1.95 (1.45)	730	2.15 (1.60)	775	2.40 (1.79)	815	2.65 (1.98)	850	2.85 (2.13)	890	3.15 (2.35)
5300 (2500)	***485***	***1.15 (0.86)***	***545***	***1.35 (1.01)***	***595***	***1.55 (1.16)***	645	1.80 (1.34)	690	2.00 (1.49)	735	2.25 (1.68)	775	2.45 (1.83)	815	2.70 (2.01)	855	2.95 (2.20)	890	3.20 (2.39)
5400 (2550)	***495***	***1.20 (0.90)***	***550***	***1.40 (1.04)***	***600***	***1.60 (1.19)***	650	1.85 (1.38)	695	2.05 (1.53)	740	2.30 (1.72)	780	2.55 (1.90)	820	2.80 (2.09)	860	3.05 (2.28)	895	3.30 (2.46)
5500 (2595)	***500***	***1.25 (0.93)***	***555***	***1.45 (1.08)***	***605***	***1.70 (1.27)***	655	1.90 (1.42)	700	2.15 (1.60)	745	2.40 (1.79)	785	2.65 (1.98)	825	2.90 (2.16)	860	3.10 (2.31)	900	3.40 (2.54)
5600 (2645)	***505***	***1.30 (0.97)***	***560***	***1.55 (1.16)***	***610***	***1.75 (1.31)***	660	2.00 (1.49)	705	2.25 (1.68)	745	2.45 (1.83)	790	2.70 (2.01)	830	3.00 (2.24)	865	3.20 (2.39)	900	3.45 (2.57)
5700 (2690)	***515***	***1.40 (1.04)***	***570***	***1.60 (1.19)***	***620***	***1.85 (1.38)***	665	2.05 (1.53)	710	2.30 (1.72)	750	2.55 (1.90)	790	2.80 (2.09)	830	3.05 (2.28)	870	3.30 (2.46)	905	3.55 (2.65)
5800 (2735)	***520***	***1.45 (1.08)***	***575***	***1.65 (1.23)***	***625***	***1.90 (1.42)***	670	2.15 (1.60)	715	2.40 (1.79)	755	2.60 (1.94)	795	2.85 (2.13)	835	3.15 (2.35)	875	3.40 (2.54)	910	3.65 (2.72)
5900 (2785)	***530***	***1.50 (1.12)***	***580***	***1.75 (1.31)***	***630***	***2.00 (1.49)***	675	2.20 (1.64)	720	2.45 (1.83)	760	2.70 (2.01)	800	2.95 (2.20)	840	3.25 (2.42)	875	3.50 (2.61)	910	3.75 (2.80)
6000 (2830)	***535***	***1.60 (1.19)***	***585***	***1.80 (1.34)***	***635***	***2.05 (1.53)***	680	2.30 (1.72)	725	2.55 (1.90)	765	2.80 (2.09)	805	3.05 (2.28)	845	3.35 (2.50)	880	3.60 (2.69)	915	3.85 (2.87)
6100 (2880)	***545***	***1.65 (1.23)***	***595***	***1.90 (1.42)***	***640***	***2.15 (1.60)***	685	2.40 (1.79)	730	2.65 (1.98)	770	2.90 (2.16)	810	3.15 (2.35)	845	3.40 (2.54)	885	3.70 (2.76)	920	3.95 (2.95)
6300 (2975)	***560***	***1.80 (1.34)***	***605***	***2.05 (1.53)***	655	2.30 (1.72)	695	2.55 (1.90)	740	2.80 (2.09)	780	3.10 (2.31)	820	3.35 (2.50)	855	3.60 (2.69)	890	3.90 (2.91)	925	4.15 (3.10)
6200 (2925)	***550***	***1.75 (1.31)***	***600***	***1.95 (1.45)***	645	2.20 (1.64)	690	2.45 (1.83)	735	2.75 (2.05)	775	3.00 (2.24)	815	3.25 (2.42)	850	3.50 (2.61)	890	3.80 (2.83)	925	4.10 (3.06)
6400 (3020)	***565***	***1.90 (1.42)***	***615***	***2.15 (1.60)***	660	2.40 (1.79)	705	2.65 (1.98)	745	2.90 (2.16)	785	3.20 (2.39)	825	3.45 (2.57)	860	3.70 (2.76)	895	4.00 (2.98)	930	4.30 (3.21)
6500 (3065)	***570***	***1.95 (1.45)***	***620***	***2.20 (1.64)***	665	2.50 (1.87)	710	2.75 (2.05)	750	3.00 (2.24)	790	3.30 (2.46)	830	3.55 (2.65)	865	3.85 (2.87)	900	4.10 (3.06)	935	4.40 (3.28)
6600 (3115)	***580***	***2.05 (1.53)***	***625***	***2.30 (1.72)***	670	2.55 (1.90)	715	2.85 (2.13)	755	3.10 (2.31)	795	3.40 (2.54)	830	3.65 (2.72)	870	3.95 (2.95)	905	4.25 (3.17)	940	4.55 (3.39)
6700 (3160)	***585***	***2.15 (1.60)***	***635***	***2.40 (1.79)***	680	2.70 (2.01)	720	2.95 (2.20)	760	3.20 (2.39)	800	3.50 (2.61)	835	3.75 (2.80)	875	4.05 (3.02)	910	4.35 (3.25)	945	4.65 (3.47)
6800 (3210)	***595***	***2.25 (1.68)***	***640***	***2.50 (1.87)***	685	2.75 (2.05)	725	3.05 (2.28)	765	3.30 (2.46)	805	3.60 (2.69)	840	3.85 (2.87)	880	4.20 (3.13)	915	4.50 (3.36)	945	4.75 (3.54)
6900 (3255)	***600***	***2.30 (1.72)***	645	2.55 (1.90)	690	2.85 (2.13)	730	3.10 (2.31)	770	3.40 (2.54)	810	3.70 (2.76)	845	3.95 (2.95)	885	4.30 (3.21)	915	4.55 (3.39)	950	4.85 (3.62)
7000 (3305)	***610***	***2.40 (1.79)***	655	2.70 (2.01)	695	2.95 (2.20)	740	3.25 (2.42)	775	3.50 (2.61)	815	3.80 (2.83)	850	4.10 (3.06)	885	4.40 (3.28)	920	4.70 (3.51)	955	5.00 (3.73)
7100 (3350)	***615***	***2.50 (1.87)***	660	2.80 (2.09)	705	3.10 (2.31)	745	3.35 (2.50)	785	3.65 (2.72)	820	3.95 (2.95)	855	4.20 (3.13)	890	4.50 (3.36)	925	4.80 (3.58)	960	5.15 (3.84)
7200 (3400)	***625***	***2.60 (1.94)***	665	2.85 (2.13)	710	3.20 (2.39)	750	3.45 (2.57)	790	3.75 (2.80)	825	4.05 (3.02)	860	4.35 (3.25)	895	4.65 (3.47)	930	4.95 (3.69)	965	5.30 (3.95)

BLOWER DATA - CHA16-240

BLOWER TABLE INCLUDES RESISTANCE FOR BASE UNIT ONLY WITH DRY INDOOR COIL & AIR FILTERS IN PLACE.

FOR ALL UNITS ADD:

1 - Wet indoor coil air resistance of selected unit.

2 - Any field installed accessories air resistance (electric heat, economizer, duct resistance, diffuser, etc.)

Then determine from blower table blower motor output.

NOTE - In Canada, nominal motor output is also maximum usable motor output - 5 hp (3.73 kW) and 7.5 hp (5.60 kW).

See Page 8 for wet coil and optional accessory air resistance data.

MINIMUM AIR VOLUME REQUIRED FOR USE WITH OPTIONAL ELECTRIC HEAT

●Units require 4900 cfm (2310 L/s) minimum air with electric heat.

BOLD ITALIC INDICATES FIELD FURNISHED DRIVE

Air Volume cfm (L/s)	STATIC PRESSURE EXTERNAL TO UNIT — Inches Water Gauge (Pa)																					
	.20 (50)		.40 (100)		.60 (150)		.80 (200)		1.00 (250)		1.20 (300)		1.40 (350)		1.60 (400)		1.80 (450)		2.00 (495)	
	RPM	BHP (kW)	RPM	BHP (kW)	RPM	BHP (kW)	RPM	BHP (kW)	RPM	BHP (kW)	RPM	BHP (kW)	RPM	BHP (kW)	RPM	BHP (kW)	RPM	BHP (kW)	RPM	BHP (kW)	RPM	BHP (kW)
6000 (2830)	***560***	***1.70 (1.27)***	***610***	***1.95 (1.45)***	***660***	***2.20 (1.64)***	***710***	***2.45 (1.83)***	***755***	***2.75 (2.05)***	795	3.00 (2.24)	840	3.30 (2.46)	880	3.60 (2.69)	915	3.85 (2.87)	955	4.20 (3.13)
6100 (2880)	***565***	***1.75 (1.31)***	***620***	***2.05 (1.53)***	***670***	***2.30 (1.72)***	***715***	***2.55 (1.90)***	***760***	***2.85 (2.13)***	800	3.10 (2.31)	845	3.40 (2.54)	885	3.70 (2.76)	920	3.95 (2.95)	955	4.25 (3.17)
6200 (2925)	***575***	***1.85 (1.38)***	***625***	***2.10 (1.57)***	***675***	***2.35 (1.75)***	***720***	***2.65 (1.98)***	765	2.90 (2.16)	805	3.20 (2.39)	850	3.50 (2.61)	885	3.75 (2.80)	925	4.10 (3.06)	960	4.40 (3.28)
6300 (2975)	***580***	***1.90 (1.42)***	***635***	***2.20 (1.64)***	***680***	***2.45 (1.83)***	***725***	***2.75 (2.05)***	770	3.00 (2.24)	815	3.30 (2.46)	850	3.60 (2.69)	890	3.90 (2.91)	930	4.20 (3.13)	965	4.50 (3.36)
6400 (3020)	***590***	***2.00 (1.49)***	***640***	***2.30 (1.72)***	***685***	***2.55 (1.90)***	***735***	***2.85 (2.13)***	775	3.10 (2.31)	820	3.45 (2.57)	855	3.70 (2.76)	895	4.00 (2.98)	935	4.35 (3.25)	970	4.65 (3.47)
6500 (3065)	***595***	***2.10 (1.57)***	***645***	***2.35 (1.75)***	***695***	***2.65 (1.98)***	***740***	***2.95 (2.20)***	780	3.20 (2.39)	825	3.55 (2.65)	860	3.80 (2.83)	900	4.10 (3.06)	940	4.45 (3.32)	975	4.75 (3.54)
6600 (3115)	***605***	***2.20 (1.64)***	***655***	***2.45 (1.83)***	***700***	***2.75 (2.05)***	***745***	***3.05 (2.28)***	785	3.30 (2.46)	830	3.65 (2.72)	865	3.90 (2.91)	905	4.25 (3.17)	940	4.55 (3.39)	975	4.85 (3.62)
6700 (3160)	***610***	***2.25 (1.68)***	***660***	***2.55 (1.90)***	***705***	***2.85 (2.13)***	***750***	***3.15 (2.35)***	795	3.45 (2.57)	835	3.75 (2.80)	870	4.00 (2.98)	910	4.35 (3.25)	945	4.65 (3.47)	980	4.95 (3.69)
6800 (3210)	***620***	***2.35 (1.75)***	***665***	***2.65 (1.98)***	***715***	***2.95 (2.20)***	***755***	***3.25 (2.42)***	800	3.55 (2.65)	840	3.85 (2.87)	880	4.20 (3.13)	915	4.50 (3.36)	950	4.80 (3.58)	985	5.10 (3.80)
6900 (3255)	***625***	***2.45 (1.83)***	***675***	***2.75 (2.05)***	***720***	***3.05 (2.28)***	765	3.35 (2.50)	805	3.65 (2.72)	845	3.95 (2.95)	885	4.30 (3.21)	920	4.60 (3.43)	955	4.90 (3.66)	990	5.25 (3.92)
7000 (3305)	***635***	***2.55 (1.90)***	***680***	***2.85 (2.13)***	***725***	***3.15 (2.35)***	770	3.45 (2.57)	810	3.75 (2.80)	850	4.10 (3.06)	890	4.40 (3.28)	925	4.75 (3.54)	960	5.05 (3.77)	995	5.40 (4.03)
7100 (3350)	***640***	***2.65 (1.98)***	***690***	***3.00 (2.24)***	***735***	***3.30 (2.46)***	775	3.60 (2.69)	815	3.90 (2.91)	855	4.20 (3.13)	895	4.55 (3.39)	930	4.85 (3.62)	965	5.20 (3.88)	1000	5.55 (4.14)
7200 (3400)	***650***	***2.80 (2.09)***	***695***	***3.05 (2.28)***	***740***	***3.40 (2.54)***	780	3.70 (2.76)	820	4.00 (2.98)	860	4.35 (3.25)	900	4.70 (3.51)	935	5.00 (3.73)	970	5.35 (3.99)	1005	5.65 (4.21)
7300 (3445)	***655***	***2.85 (2.13)***	***705***	***3.20 (2.39)***	***745***	***3.50 (2.61)***	790	3.85 (2.87)	830	4.15 (3.10)	865	4.45 (3.32)	905	4.80 (3.58)	940	5.15 (3.84)	975	5.45 (4.07)	1010	5.80 (4.33)
7400 (3490)	***665***	***3.00 (2.24)***	***710***	***3.30 (2.46)***	***755***	***3.65 (2.72)***	795	3.95 (2.95)	835	4.30 (3.21)	870	4.60 (3.43)	910	4.95 (3.69)	945	5.25 (3.92)	980	5.60 (4.18)	1015	5.95 (4.44)
7500 (3540)	***675***	***3.10 (2.31)***	***715***	***3.40 (2.54)***	***760***	***3.75 (2.80)***	800	4.05 (3.02)	840	4.40 (3.28)	880	4.75 (3.54)	915	5.05 (3.77)	950	5.40 (4.03)	985	5.75 (4.29)	1020	6.10 (4.55)
7600 (3585)	***680***	***3.20 (2.39)***	***725***	***3.55 (2.65)***	765	3.85 (2.87)	805	4.20 (3.13)	845	4.50 (3.36)	885	4.90 (3.66)	920	5.20 (3.88)	955	5.55 (4.14)	990	5.90 (4.40)	1020	6.20 (4.63)
7700 (3635)	***690***	***3.35 (2.50)***	***730***	***3.65 (2.72)***	775	4.00 (2.98)	815	4.35 (3.25)	850	4.65 (3.47)	890	5.00 (3.73)	925	5.35 (3.99)	960	5.70 (4.25)	995	6.05 (4.51)	1025	6.40 (4.77)
7800 (3680)	***695***	***3.45 (2.57)***	***740***	***3.80 (2.83)***	780	4.15 (3.10)	820	4.45 (3.32)	860	4.80 (3.58)	895	5.15 (3.84)	930	5.50 (4.10)	965	5.85 (4.36)	1000	6.20 (4.63)	1030	6.55 (4.89)
7900 (3730)	***705***	***3.60 (2.69)***	***745***	***3.90 (2.91)***	785	4.25 (3.17)	825	4.60 (3.43)	865	4.95 (3.69)	900	5.30 (3.95)	935	5.65 (4.21)	970	6.00 (4.48)	1005	6.35 (4.74)	1035	6.70 (5.00)
8000 (3775)	***710***	***3.70 (2.76)***	***755***	***4.05 (3.02)***	795	4.40 (3.28)	835	4.75 (3.54)	870	5.10 (3.80)	905	5.45 (4.07)	940	5.80 (4.33)	975	6.15 (4.59)	1010	6.50 (4.85)	1040	6.85 (5.11)
8100 (3820)	***720***	***3.85 (2.87)***	***760***	***4.20 (3.13)***	800	4.55 (3.39)	840	4.90 (3.66)	875	5.25 (3.92)	915	5.60 (4.18)	950	6.00 (4.48)	980	6.30 (4.70)	1015	6.70 (5.00)	1045	7.05 (5.26)
8200 (3870)	***730***	***4.00 (2.98)***	770	4.35 (3.25)	810	4.70 (3.51)	845	5.05 (3.77)	885	5.40 (4.03)	920	5.75 (4.29)	955	6.15 (4.59)	985	6.45 (4.81)	1020	6.85 (5.11)	1050	7.20 (5.37)
8300 (3915)	***735***	***4.15 (3.10)***	775	4.45 (3.32)	815	4.85 (3.62)	855	5.20 (3.88)	890	5.55 (4.14)	925	5.90 (4.40)	960	6.30 (4.70)	995	6.65 (4.96)	1025	7.00 (5.22)	1055	7.35 (5.48)
8400 (3965)	***745***	***4.30 (3.21)***	785	4.65 (3.47)	825	5.00 (3.73)	860	5.35 (3.99)	895	5.70 (4.25)	930	6.05 (4.51)	965	6.45 (4.81)	1000	6.85 (5.11)	1030	7.20 (5.37)	1065	7.60 (5.67)
8500 (4010)	***750***	***4.40 (3.28)***	790	4.75 (3.54)	830	5.15 (3.84)	865	5.50 (4.10)	900	5.85 (4.36)	940	6.25 (4.66)	970	6.60 (4.92)	1005	7.00 (5.22)	1035	7.35 (5.48)	1070	7.80 (5.82)
8600 (4060)	***760***	***4.60 (3.43)***	800	4.95 (3.69)	835	5.30 (3.95)	875	5.70 (4.25)	910	6.05 (4.51)	945	6.45 (4.81)	975	6.75 (5.04)	1010	7.15 (5.33)	1040	7.55 (5.63)	1075	7.95 (5.93)
8700 (4105)	***765***	***4.70 (3.51)***	805	5.10 (3.80)	845	5.45 (4.07)	880	5.85 (4.36)	915	6.20 (4.63)	950	6.60 (4.92)	985	7.00 (5.22)	1015	7.35 (5.48)	1045	7.70 (5.74)	1080	8.15 (6.08)
8800 (4155)	775	4.90 (3.66)	815	5.25 (3.92)	850	5.60 (4.18)	885	6.00 (4.48)	920	6.35 (4.74)	955	6.75 (5.04)	990	7.15 (5.33)	1020	7.50 (5.60)	1055	7.95 (5.93)	1085	8.35 (6.23)
8900 (4200)	785	5.05 (3.77)	820	5.40 (4.03)	860	5.80 (4.33)	895	6.20 (4.63)	930	6.55 (4.89)	960	6.90 (5.15)	995	7.35 (5.48)	1025	7.70 (5.74)	1060	8.15 (6.08)	1090	8.55 (6.38)
9000 (4245)	790	5.20 (3.88)	830	5.60 (4.18)	865	5.95 (4.44)	900	6.35 (4.74)	935	6.75 (5.04)	970	7.15 (5.33)	1000	7.50 (5.60)	1035	7.95 (5.93)	1065	8.30 (6.19)	***1095***	***8.70 (6.49)***

BLOWER DATA

ACCESSORY AIR RESISTANCE

Unit Model No.	Air Volume		Total Resistance													
			Wet Evaporator Coil		Electric Heat		REMD16M Down-Flow Economizer		RTD11 Step-Down Diffuser						FD11 Flush Diffuser	
									2 Ends Open		1 Side 2 Ends Open		All Ends & Sides Open			
	cfm	L/s	in. w.g.	Pa	in. w.g.	Pa	in. w.g.	Pa	in. w.g.	Pa	in. w.g.	Pa	in. w.g.	Pa	in. w.g.	Pa
CHA16-180	4800	2265	.14	35	.15	37	.03	7	.46	114	.40	99	.36	90	.24	60
	5000	2360	.14	35	.17	42	.03	7	.51	127	.44	109	.39	97	.27	67
	5200	2455	.15	37	.20	50	.03	7	.56	139	.48	119	.42	104	.30	75
	5400	2550	.16	40	.22	55	.04	10	.61	152	.52	129	.45	112	.33	82
	5600	2645	.17	42	.22	55	.04	10	.66	164	.56	139	.48	119	.36	90
	5800	2735	.18	45	.25	62	.05	12	.71	177	.59	147	.51	127	.39	97
	6000	2830	.19	47	.26	64	.05	12	.76	189	.63	157	.55	137	.42	104
	6200	2925	.20	50	.29	72	.05	12	.80	199	.68	169	.59	147	.46	114
	6400	3020	.21	52	.31	77	.06	15	.86	214	.72	179	.63	157	.50	124
	6600	3115	.22	55	.32	80	.06	15	.92	229	.77	191	.67	167	.54	134
	6800	3210	.23	57	.33	82	.07	17	.99	246	.83	206	.72	174	.58	144
	7000	3305	.24	60	.33	82	.07	17	1.03	256	.87	216	.76	189	.62	154
	7200	3400	.25	62	.34	85	.08	20	1.09	271	.92	229	.80	199	.66	164
CHA16-240	6000	2830	.24	60	.26	64	.05	12	.36	90	.31	77	.27	67	.29	72
	6500	3065	.28	70	.32	80	.06	15	.42	104	.36	90	.31	77	.34	85
	7000	3305	.31	77	.33	82	.07	17	.49	122	.41	102	.36	90	.40	99
	7500	3540	.34	85	.40	99	.09	22	.51	127	.46	114	.41	102	.45	112
	8000	3775	.38	94	.42	104	.10	25	.59	147	.49	122	.43	107	.50	124
	8500	4010	.42	104	.50	124	.11	27	.69	172	.58	144	.50	124	.57	142
	9000	4245	.46	114	.58	144	.13	32	.79	196	.67	167	.58	144	.66	164

PED16-18/24 POWER EXHAUST FANS PERFORMANCE

Model No.	Air Volume		Return Air System Static Pressure	
	cfm	L/s	In. w.g.	Pa
PED16-18/24	6000	2830	0	0
	5700	2690	.05	12
	5300	2500	.10	25
	5000	2360	.15	37
	4700	2210	.20	50
	4200	1980	.25	62
	3600	1700	.30	75

CEILING DIFFUSER AIR THROW DATA

Model No.	Air Volume		[1] Effective Throw Range			
			RTD11 Step-Down		FD11 Flush	
	cfm	L/s	ft.	m	ft.	m
CHA16-180	5600	2645	39 - 49	12 - 15	28 - 37	9 - 11
	5800	2740	42 - 51	13 - 16	29 - 38	9 - 12
	6000	2830	44 - 54	13 - 17	40 - 50	12 - 15
	6200	2925	45 - 55	14 - 17	42 - 51	13 - 16
	6400	3020	46 - 55	14 - 17	43 - 52	13 - 16
	6600	3115	47 - 56	14 - 17	45 - 56	14 - 17
CHA16-240	7200	3400	33 - 38	10 - 12	26 - 35	8 - 11
	7400	3490	35 - 40	11 - 12	28 - 37	9 - 11
	7600	3585	36- 41	11 - 13	29 - 38	9 - 12
	7800	3680	38 - 43	11 - 13	40 - 50	12 - 15
	8000	3775	39 - 44	12 - 13	42 - 51	13 - 16
	8200	3870	41 - 46	12 - 14	43 - 52	13 - 16
	8400	3965	43 - 49	13 - 15	44 - 54	13 - 17
	8600	4060	44 - 50	13 - 15	46 - 57	14 - 17
	8800	4155	47 - 55	14 - 17	48 - 59	15 - 18

[1] Throw is the horizontal or vertical distance an air stream travels on leaving the outlet or diffuser before the maximum velocity is reduced to 50 ft. (15 m) per minute. Four sides open.

FIELD WIRING

ELECTRO-MECHANICAL THERMOSTAT CONTROL SYSTEM

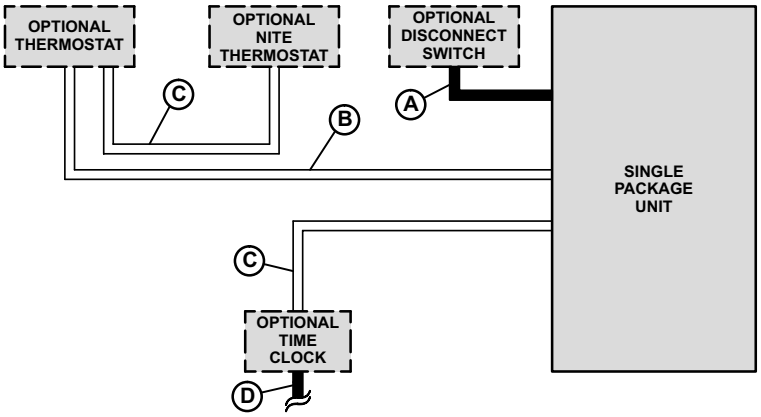

A - Three wire power (See Electrical Data Table)

B - Six wire low voltage

C - Two wire low voltage

D - Two wire power

- Field wiring not furnished -

NOTE - All wiring must conform to NEC or CEC and local electrical codes.

T7300 OR T8600D/T8624D THERMOSTAT CONTROL SYSTEM

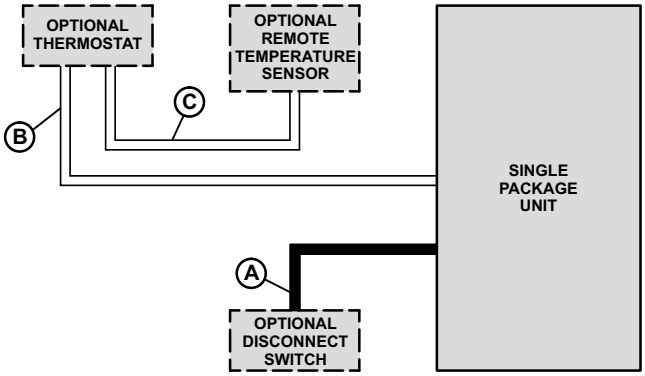

A - Three wire power (See Electrical Data Table)

B - Nine wire low voltage

C - Two wire low voltage

- Seven wire low voltage (T7300 Room Sensor with override)

- Field wiring not furnished -

NOTE - All wiring must conform to NEC or CEC and local electrical codes.

ELECTRICAL DATA

Model No.		CHA16-180						CHA16-240					
Line voltage data - 60 Hz - 3 phase		208/230V		460V		575V		208/230V		460V		575V	
Compressors (3)	Rated load amps each (total)	16.7 (50.1)		8.6 (25.8)		6.0 (18.1)		18.8 (56.4)		9.1 (27.3)		7.5 (22.5)	
	Locked rotor amps each (total)	110 (330)		55 (165)		44 (132)		156 (468)		75 (225)		54 (162)	
Condenser Fan Motor (2)	Full load amps (total)	3.7 (7.4)		1.9 (3.80		1.6 (3.2)		9.6 (19.6)		4.8 (9.6)		4.0 (8.0)	
	Locked rotor amps (total)	7.3 (14.6)		3.7 (7.4)		2.9 (5.8)		23 (46)		11.5 (23)		8.9 (17.8)	
Evaporator Blower Motor	Motor Output - hp	3	5	3	5	3	5	5	7.5	5	7.5	5	7.5
	kW	2.2	3.7	2.2	3.7	2.2	3.7	3.7	5.6	3.7	5.6	3.7	5.6
	Full load amps	10.6	16.7	4.8	7.6	3.9	6.1	16.7	24.2	7.6	11	6.1	9
	Locked rotor amps	66	105	26.8	45.6	23.4	36.6	105	152	45.6	66	36.6	54
Recommended max. fuse size (amps)	With Exhaust Fan	90	90	45	50	30	35	110	125	50	50	40	45
	Less Exhaust Fan	80	90	45	45	30	35	100	110	50	50	40	45
†Minimum Circuit Ampacity	With Exhaust Fan	78	84	40	42	29	31	93	100	45	48	37	40
	Less Exhaust Fan	73	79	37	40	27	29	88	95	42	46	35	38
Optional Power Exhaust Fans	(No.) Horsepower (W)	(2) 1/3 (250)		(2) 1/3 (250)		(2) 1/3 (250)		(2) 1/3 (250)		(2) 1/3 (250)		(2) 1/3 (250)	
	Full load amps (total)	2.4 (4.8)		2.3 (2.6)		1.0 (2.0)		2.4 (4.8)		2.3 (2.6)		1.0 (2.0)	
	Locked rotor amps (total)	4.7 (9.4)		2.4 (4.8)		2.9 (3.8)		4.7 (9.4)		2.4 (4.8)		1.9 (3.8)	

†Refer to National or Canadian Electrical Code manual to determine wire, fuse and disconnect size requirements.
NOTE — Extremes of operating range are plus and minus 10 % of line voltage.

ELECTRIC HEAT DATA

CHA16-180

Electric Heat Model No. & Net Weight	No. of Steps	Volts Input	kw Input	Btuh Output	†Total Unit + Electric Heat Minimum Circuit Ampacity (with Power Exhaust Fans)		Total Unit + Electric Heat Maximum Fuse Size (with Power Exhaust Fans)	
					3 hp (2.2 kW)	5 hp (3.7 kW)	3 hp (2.2 kW)	5 hp (3.7 kW)
15 kW ECH16-185-15	1	208	11.3	38,600	78	84	90	90
	1	220	12.6	43,000	78	84	90	90
208/230v **(24H27)**	1	230	13.8	47,100	78	84	90	90
	1	240	15.0	51,200	78	84	90	90
460v **(24H32)**	1	440	12.6	43,000	40	42	45	50
	1	460	13.8	47,100	40	42	45	50
575v **(24H38)**	1	480	15.0	51,200	40	42	45	50
	1	550	12.6	43,000	29	31	30	35
47 lbs. (21 kg)	1	575	13.8	47,100	29	31	30	35
	1	600	15.0	51,200	29	31	30	35
30 kW ECH16-185/300-30	[1]2	208	22.5	76,800	110	118	110	125
	[1]2	220	25.2	86,000	110	118	110	125
208/230v **(24H28)**	[1]2	230	27.6	93,900	110	118	110	125
	[1]2	240	30.0	102,400	110	118	110	125
460v **(24H33)**	1	440	25.2	86,000	55	58	60	60
	1	460	27.6	93,900	55	58	60	60
575v **(24H39)**	1	480	30.0	102,400	55	58	60	60
	1	550	25.2	86,000	44	47	45	50
51 lbs. (23 kg)	1	575	27.6	93,900	44	47	45	50
	1	600	30.0	102,400	44	47	45	50
45 kW ECH16-185/300-45	[1]2	208	33.8	115,300	155	163	175	175
	[1]2	220	37.8	129,000	155	163	175	175
208/230v **(24H29)**	[1]2	230	41.3	141,000	155	163	175	175
	[1]2	240	45.0	153,600	155	163	175	175
460v **(24H34)**	[1]2	440	37.8	129,000	77	81	80	90
	[1]2	460	41.3	141,000	77	81	80	90
575v **(24H40)**	[1]2	480	45.0	153,600	77	81	80	90
	[1]2	550	37.8	129,000	62	65	70	70
62 lbs. (28 kg)	[1]2	575	41.3	141,000	62	65	70	70
	[1]2	600	45.0	153,600	62	65	70	70
60 kW ECH16-185/300-60	[1]2	208	45.1	153,900	164	172	175	175
	[1]2	220	50.4	172,000	164	172	175	175
208/230v **(24H30)**	[1]2	230	55.1	188,000	164	172	175	175
	[1]2	240	60.0	204,800	164	172	175	175
460v **(24H35)**	[1]2	440	50.4	172,000	82	85	90	90
	[1]2	460	55.1	188,000	82	85	90	90
575v **(24H41)**	[1]2	480	60.0	204,800	82	85	90	90
	[1]2	550	50.4	172,000	66	68	70	70
67 lbs. (30 kg)	[1]2	575	55.1	188,000	66	68	70	70
	[1]2	600	60.0	204,700	66	68	70	70
75 kW ECH16-185/300-75	[1]2	440	63.0	215,000	100	103	100	110
	[1]2	460	68.9	235,100	100	103	100	110
460v **(24H36)**	[1]2	480	75.0	256,000	100	103	100	110
	[1]2	550	63.0	215,000	80	83	80	90
575v **(24H42)**	[1]2	575	68.9	235,100	80	83	80	90
88 lbs. (40 kg)	[1]2	600	75.0	256,000	80	83	80	90

†Refer to National or Canadian Electrical Code manual to determine wire, fuse and disconnect size requirements. Use wires suitable for at least 167°F (75°C).

[1] May be used with two stage control.

ELECTRIC HEAT DATA

CHA16-240

Electric Heat Model No. & Net Weight	No. of Steps	Volts Input	kw Input	Btuh Output	†Total Unit + Electric Heat Minimum Circuit Ampacity (with Power Exhaust Fans)		Total Unit + Electric Heat Maximum Fuse Size (with Power Exhaust Fans)	
					5 hp (3.7 kW)	7.5 hp (5.7 kW)	5 hp (3.7 kW)	7.5 hp (5.7 kW)
30 kW ECH16-185/300-30	[1]2	208	22.5	76,800	118	127	125	150
	[1]2	220	25.2	86,000	118	127	125	150
208/230v **(24H28)**	[1]2	230	27.6	93,900	118	127	125	150
460v **(24H33)**	[1]2	240	30.0	102,400	118	127	125	150
	1	440	25.2	86,000	58	63	60	70
575v **(24H39)**	1	460	27.6	93,900	58	63	60	70
51 lbs. (23 kg)	1	480	30.0	102,400	58	63	60	70
	1	550	25.2	86,000	47	50	50	50
	1	575	27.6	93,900	47	50	50	50
	1	600	30.0	102,400	47	50	50	50
45 kW ECH16-185/300-45	[1]3	208	33.8	115,300	163	172	175	175
	[1]3	220	37.8	129,000	163	172	175	175
208/230v **(24H29)**	[1]3	230	41.3	141,000	163	172	175	175
460v **(24H34)**	[1]3	240	45.0	153,600	163	172	175	175
	[1]2	440	37.8	129,000	81	85	90	90
575v **(24H40)**	[1]2	460	41.3	141,000	81	85	90	90
62 lbs. (28 kg)	[1]2	480	45.0	153,600	81	85	90	90
	[1]2	550	37.8	129,000	65	68	70	70
	[1]2	575	41.3	141,000	65	68	70	70
	[1]2	600	45.0	153,600	65	68	70	70
60 kW ECH16-185/300-60	[1]4	208	45.1	153,900	172	181	175	200
	[1]4	220	50.4	172,000	172	181	175	200
208/230v **(24H30)**	[1]4	230	55.1	188,000	172	181	175	200
460v **(24H35)**	[1]4	240	60.0	204,800	172	181	175	200
	[1]2	440	50.4	172,000	85	90	90	90
575v **(24H41)**	[1]2	460	55.1	188,000	85	90	90	90
67 lbs. (30 kg)	[1]2	480	60.0	204,800	85	90	90	90
	[1]2	550	50.4	172,000	68	72	70	80
	[1]2	575	55.1	188,000	68	72	70	80
	[1]2	600	60.0	204,800	68	72	70	80
75 kW ECH16-185/300-75	[1]3	440	63.0	215,000	103	108	110	110
	[1]3	460	68.9	235,100	103	108	110	110
460v **(24H36)**	[1]3	480	75.0	256,000	103	108	110	110
575v **(24H42)**	[1]3	550	63.0	215,000	83	86	90	90
	[1]3	575	68.9	235,100	83	86	90	90
88 lbs. (40 kg)	[1]3	600	75.0	256,000	83	86	90	90

†Refer to National or Canadian Electrical Code manual to determine wire, fuse and disconnect size requirements. Use wires suitable for at least 167°F (75°C).

[1] May be used with two stage control.

INSTALLATION CLEARANCES - INCHES (MM)

CHA16 BASIC UNIT

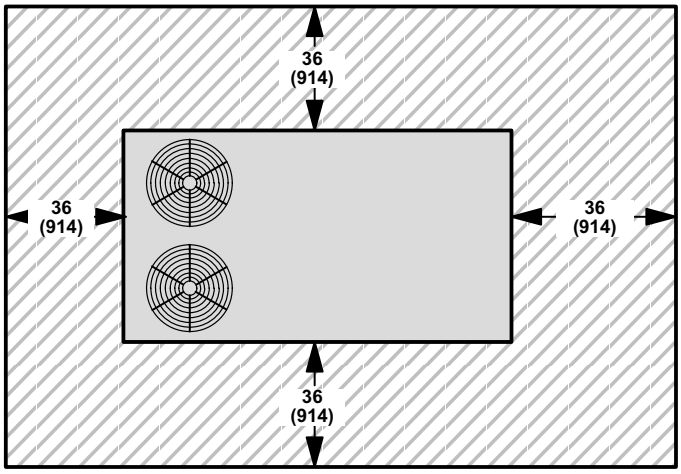

NOTE - Top Clearance Unobstructed.
NOTE - Entire perimeter of unit requires support when elevated above mounting surface.

CHA16 UNIT WITH REMD16M ECONOMIZER DAMPER SECTION OR OAD16 OUTDOOR AIR DAMPER SECTION (DOWN-FLOW APPLICATIONS)

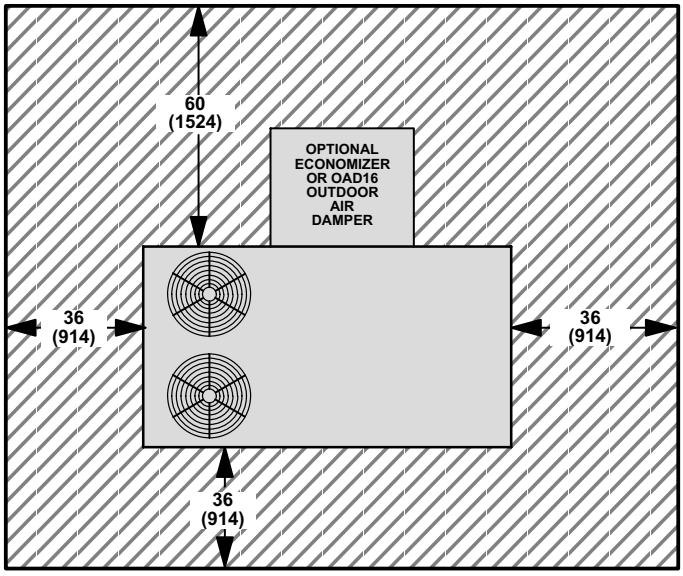

NOTE - Top Clearance Unobstructed.

CHA16 UNIT WITH REMD16M ECONOMIZER DAMPER SECTION (HORIZONTAL INSTALLATION)

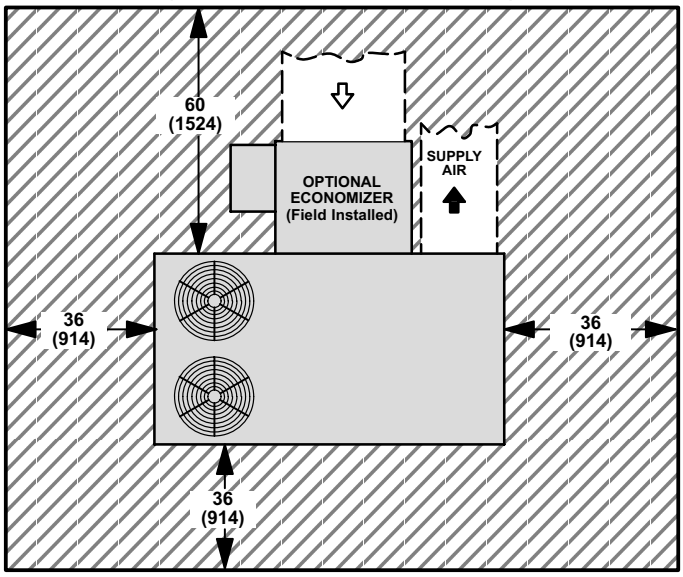

NOTE - Top Clearance Unobstructed.

OPTIONAL TEMPERATURE CONTROL SYSTEMS

System and Component Description	Catalog No.
ELECTRO-MECHANICAL THERMOSTAT CONTROL SYSTEM	
Thermostat - Two stage heat & two stage cool with dual temperature levers, subbase choice	**13F06**
Subbase - Manual system switch (Off-Heat-Auto-Cool), fan switch (Auto-On)	**13F17**
Night Setback Operation - Order components below	- - -
Heating Thermostat - Single stage heat	**13F12**
Subbase - Non-switching	**13F16**
Nite Kit - Required if economizer is not used, contains plug-in relay, overrides operation of day thermostat	**39G74**
Time Clock - 7 day operation, indicates day and night periods, 2 hour increments, battery back-up	**See Price Book for Selection**
Time Clock - 24 hour night setback operation, 15 minute increments, battery back-up	**See Price Book for Selection**
Cycle Control (Required) - provides timed-on and off function, prevents compressor short cycling	**45L54**

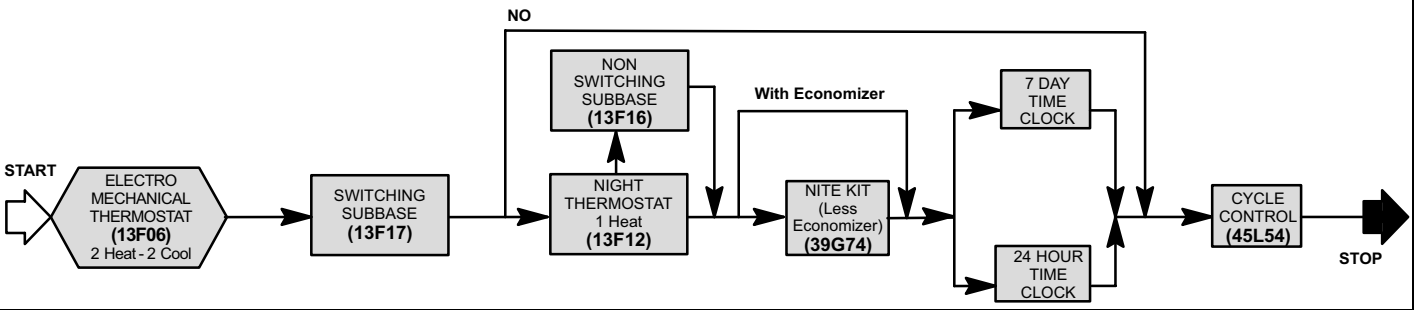

T7300 THERMOSTAT CONTROL SYSTEM	
Thermostat - Programmable, internal or optional remote temperature sensing (sensor required), touch sensitive keyboard, automatic switching, °F or °C readout, no anticipator, droop/no droop selection, indicator LED's, hour/day programming, override capabilities, time and operational mode readout, stage status indicators, battery back-up, subbase choice	**37L54**
Subbase - Selectable staging up to two stage heat & two stage cool, manual system switch (Heat-Off-Auto-Cool), fan switch (Auto-On), indicator LED's, auxiliary relay output for economizer operation	**37L55**
Subbase - Selectable staging up to three stage heat & three stage cool, manual system switch (Auto-Cool-Off-Heat-Emergency Heat) (heat pump only), fan switch (Auto-On), indicator LED's, auxiliary relay output for economizer operation	**37L53**
Sensor - Room temperature	**58C92**
Sensor - Room temperature with 3 hour override and setpoint adjustment	**86G67**
Sensor - Return air temperature	**27C40**

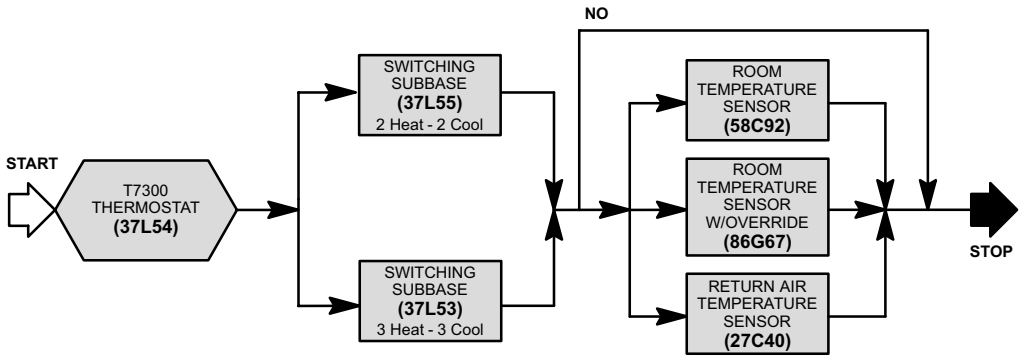

HONEYWELL T8600D/T8624D THERMOSTAT	
Thermostat - Programmable, touch sensitive keypad, automatic heat/cool switching, °F or °C readout, indicator LED's, four temperature settings per daily schedule, override capabilities, time and operational mode readout, battery back-up (batteries included)	- - -
T8600D Thermostat - 1 heat/1 cool, 7 day programming, wiring wall plate included	**37L59**
T8624D Thermostat - 2 heat/2 cool, 7 day programming, switching subbase included	**37L61**

DIMENSIONS - INCHES (MM)

Basic Unit

CORNER WEIGHTS

Model Number	AA lbs.	AA kg	BB lbs.	BB kg	CC lbs.	CC kg	DD lbs.	DD kg
CHA16-180	322	146	432	196	392	178	302	138
CHA16-240	343	156	479	217	429	195	323	147

CENTER OF GRAVITY

Model Number	EE inch	EE mm	FF inch	FF mm
CHA16-180	40-3/8	1026	52-1/4	1327
CHA16-240	40-7/8	1038	50-3/4	1289

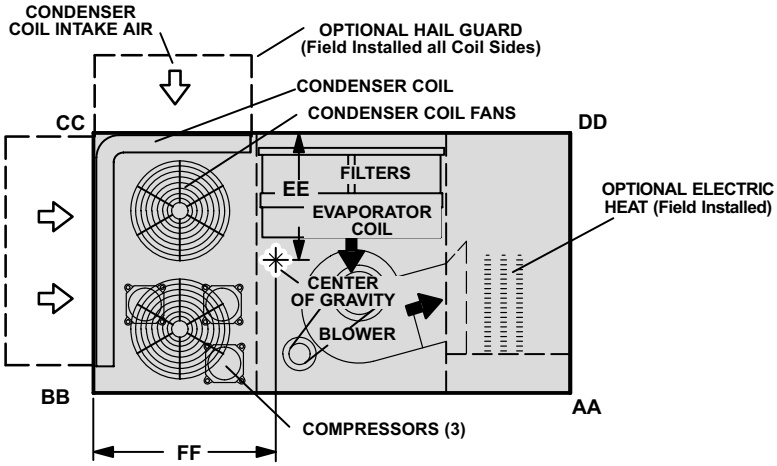

TOP VIEW

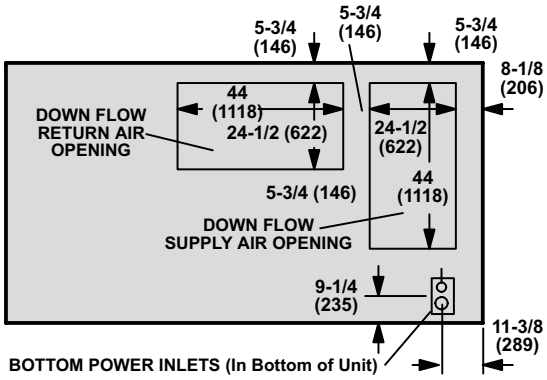

TOP VIEW BASE SECTION

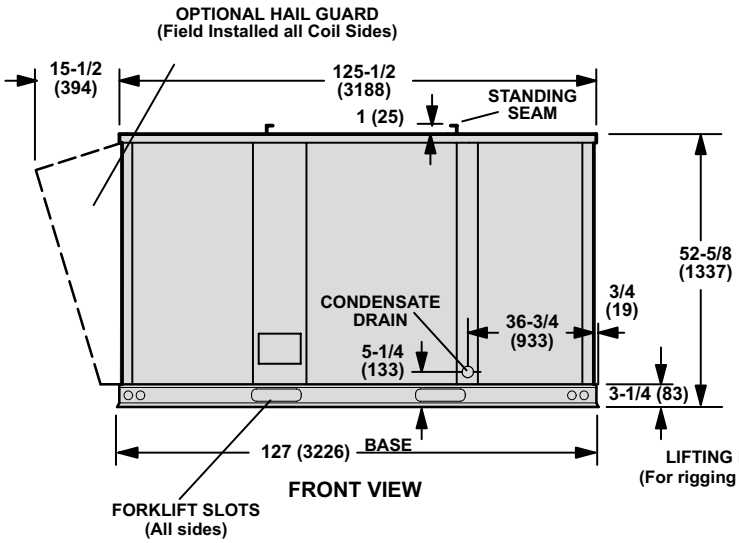

FRONT VIEW

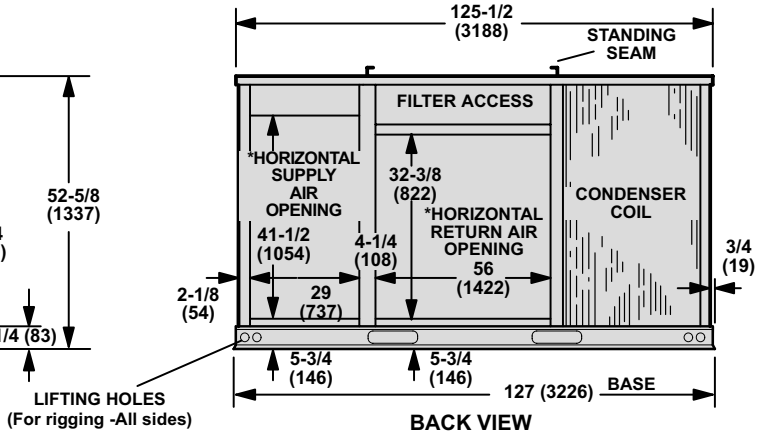

BACK VIEW
WITH HORIZONTAL SUPPLY & RETURN AIR OPENING

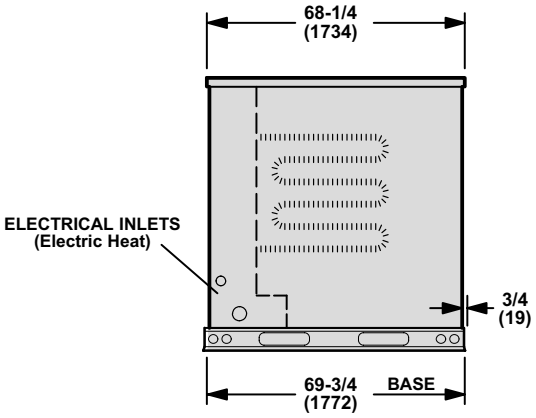

HEAT SECTION END VIEW

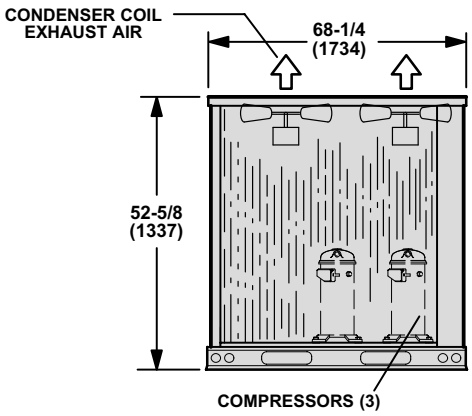

CONDENSER SECTION END VIEW

ACCESSORY DIMENSIONS - INCHES (MM)

Basic Unit With REMD16M Economizer & RMF16 Roof Mounting Frame (Down-Flow Application)

CORNER WEIGHTS

Model Number	AA		BB		CC		DD	
	lbs.	kg	lbs.	kg	lbs.	kg	lbs.	kg
CHA16-180	363	165	476	216	480	218	365	166
CHA16-240	383	174	522	237	522	237	383	174

CENTER OF GRAVITY

Model Number	EE		FF	
	inch	mm	inch	mm
CHA16-180	34-3/8	873	52-1/4	1327
CHA16-240	34-7/8	886	50-3/4	1289

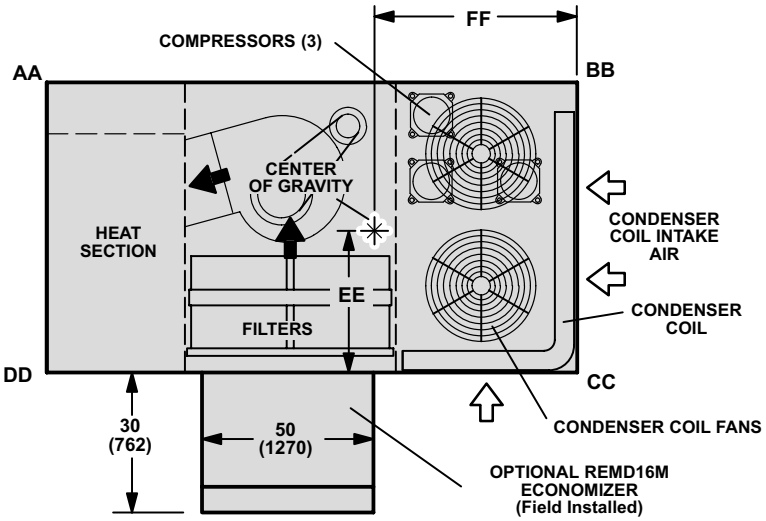

TOP VIEW

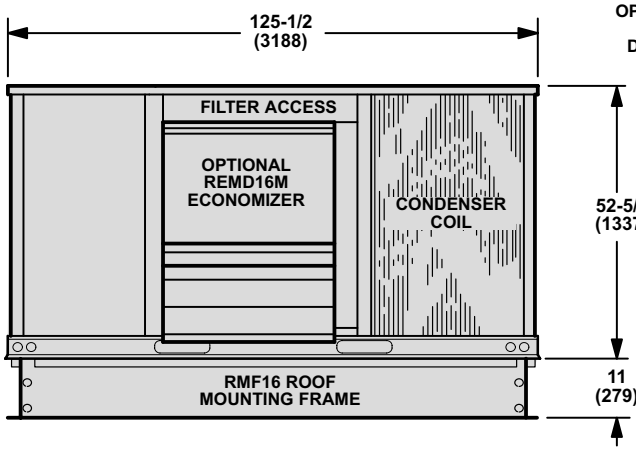

BACK VIEW

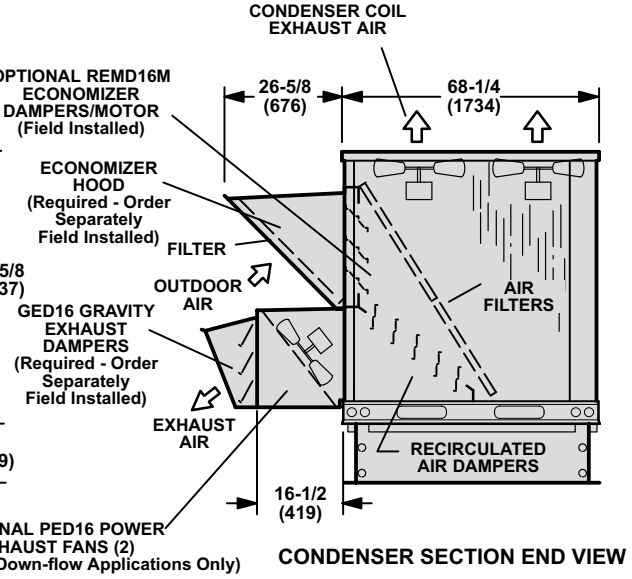

CONDENSER SECTION END VIEW

GED16 GRAVITY EXHAUST DAMPERS

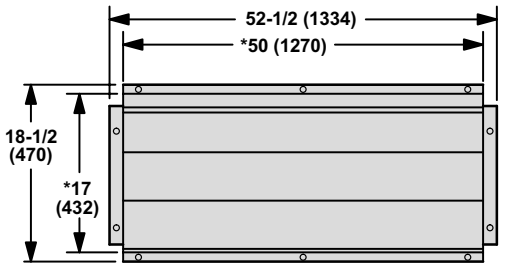

FRONT VIEW

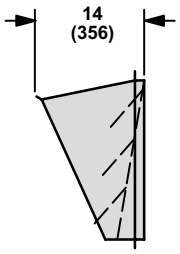

SIDE VIEW

*NOTE — Opening size required in return air duct for horizontal applications.

ACCESSORY DIMENSIONS - INCHES (MM)

Basic Unit With REMD16M Economizer (Horizontal Application)

CORNER WEIGHTS

Model Number	AA		BB		CC		DD	
	lbs.	kg	lbs.	kg	lbs.	kg	lbs.	kg
CHA16-180	357	162	471	214	459	208	351	159
CHA16-240	377	171	518	235	499	226	370	168

CENTER OF GRAVITY

Model Number	EE		FF	
	inch	mm	inch	mm
CHA16-180	36-3/8	924	52-1/4	1327
CHA16-240	36-7/8	937	50-3/4	1289

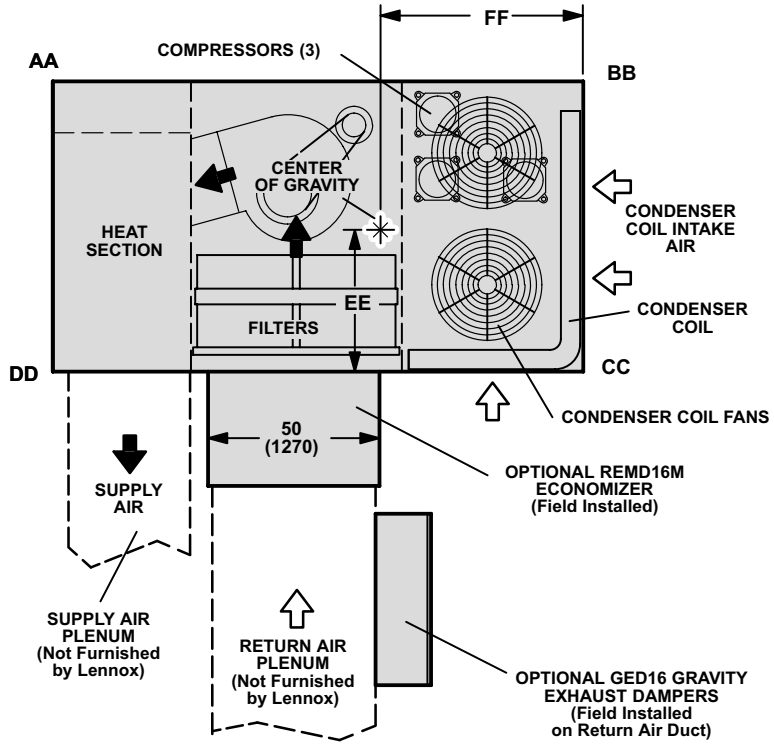

TOP VIEW

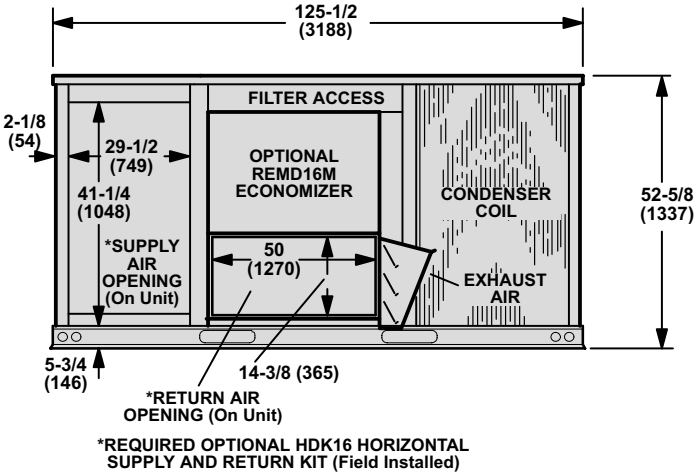

BACK VIEW
WITH HORIZONTAL SUPPLY & RETURN AIR OPENING

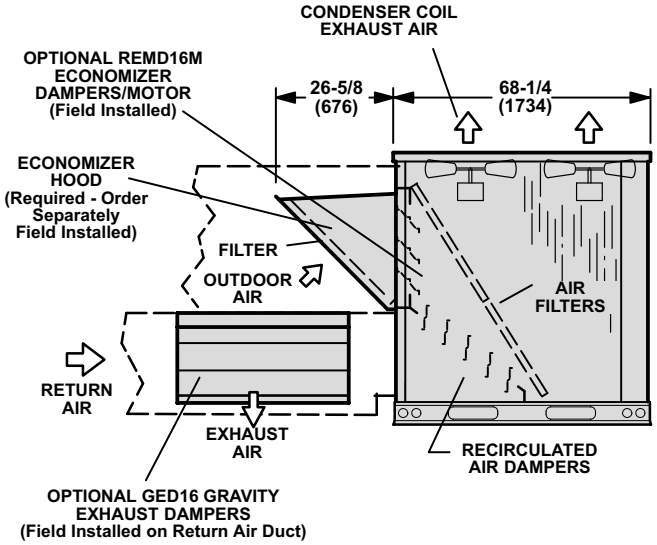

CONDENSER SECTION END VIEW

RMF16-18/24 ROOF MOUNTING FRAME WITH DOUBLE DUCT OPENING

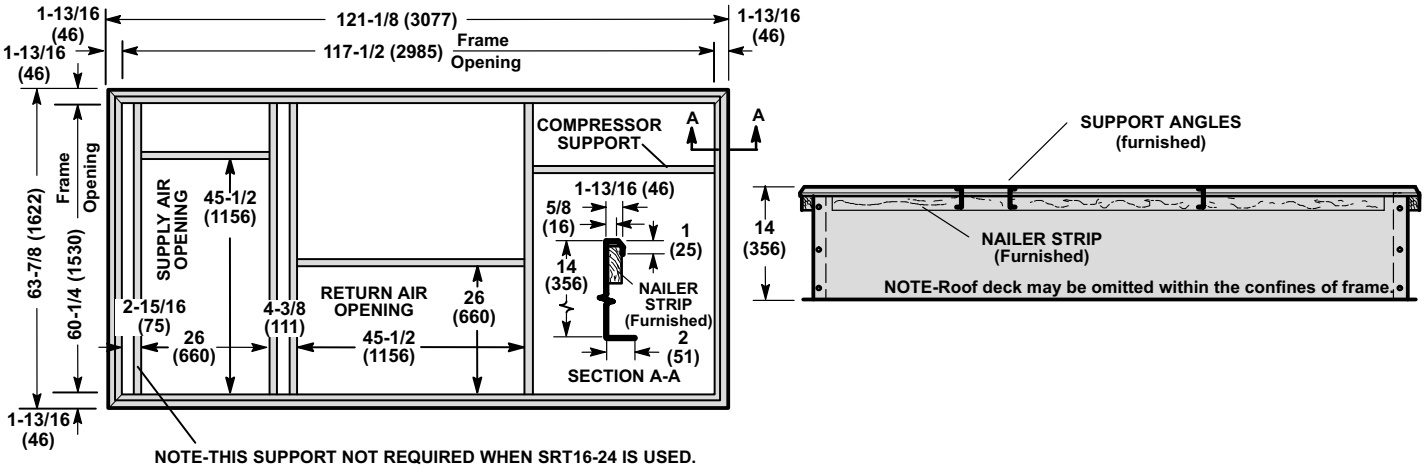

RMF16-18/24 ROOF MOUNTING FRAME WITH SRT16-18 and SRT16-24 SUPPLY AND RETURN AIR TRANSITIONS FOR FD11 & RTD11 CEILING DIFFUSERS

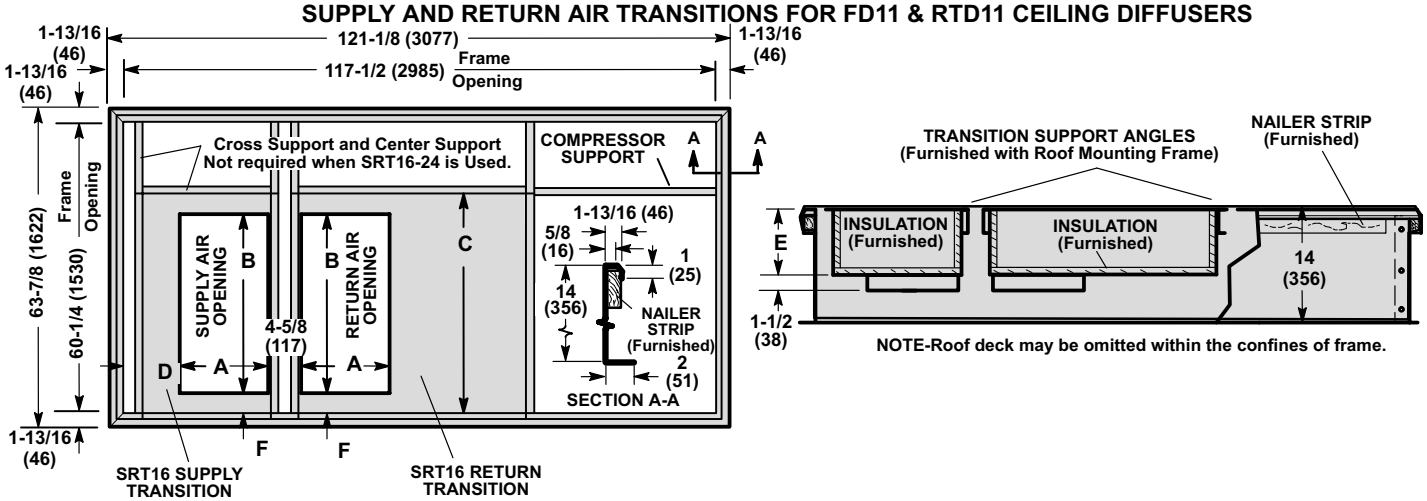

Model No.	A		B		C		D		E		F	
	inch	mm	inch	mm	inch	mm	inch	mm	inch	mm	inch	mm
RMF16-18/24 with SRT16-18	18	457	36	914	45	1143	7-1/2	191	8	203	4-1/2	114
RMF16-18/24 with SRT16-24	24	610	48	1219	50	1270	4-1/2	114	12	305	1	25

TYPICAL FLASHING DETAIL FOR RMF16 ROOF MOUNTING FRAME

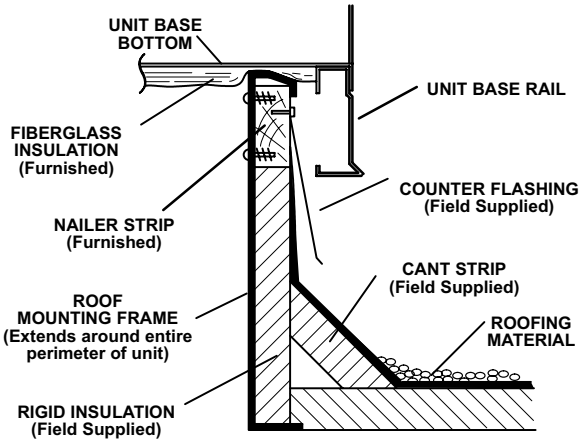

ROOF MOUNTING FRAME SPECIFICATIONS

Roof Mounting frame is rigid enough to be spanned over its entire length or cantilevered if supported on both sides of center of gravity.

Roof Mounting Frames	RMF16
*Moment of inertia (I) (in.^{4}) (cm^4)	42 (1748)
*Section modulus $\frac{I}{C}$ (in.^{3}) (cm^3)	5.8 (95)
Maximum weight (lb/ft.) (kg/m) of length	5.5 (8.2)
Design strength (psi) (kPa)	20,000 (137,900)

*Includes both sides of frame.

RMF16-18/24S ROOF MOUNTING FRAME WITH DOUBLE DUCT OPENING

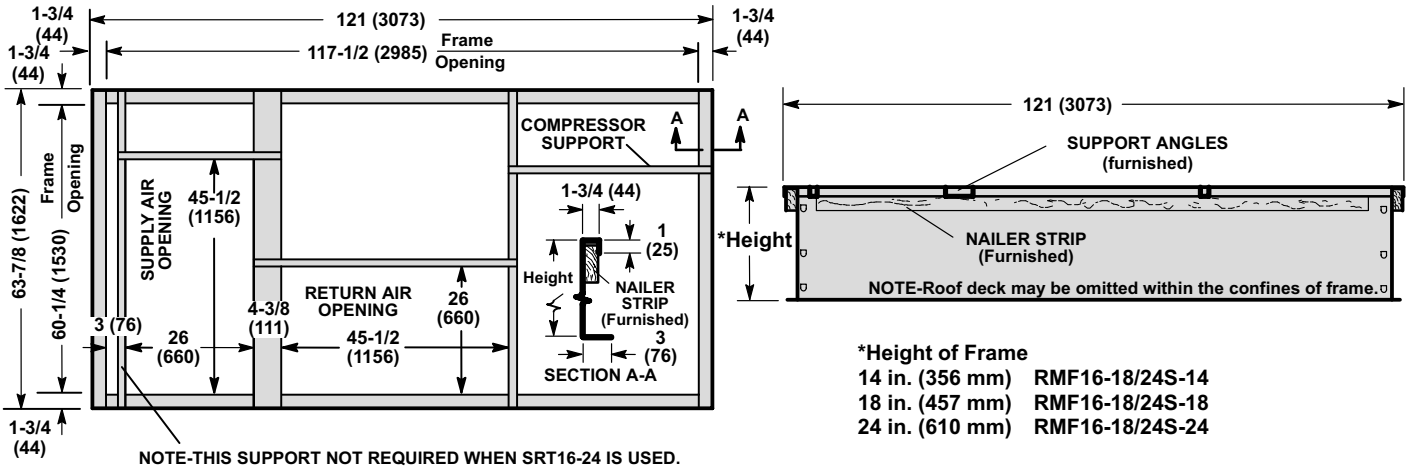

*Height of Frame
14 in. (356 mm) RMF16-18/24S-14
18 in. (457 mm) RMF16-18/24S-18
24 in. (610 mm) RMF16-18/24S-24

RMF16-18/24S ROOF MOUNTING FRAME WITH SRT16-18S and SRT16-24S SUPPLY AND RETURN AIR TRANSITIONS FOR FD11 & RTD11 CEILING DIFFUSERS

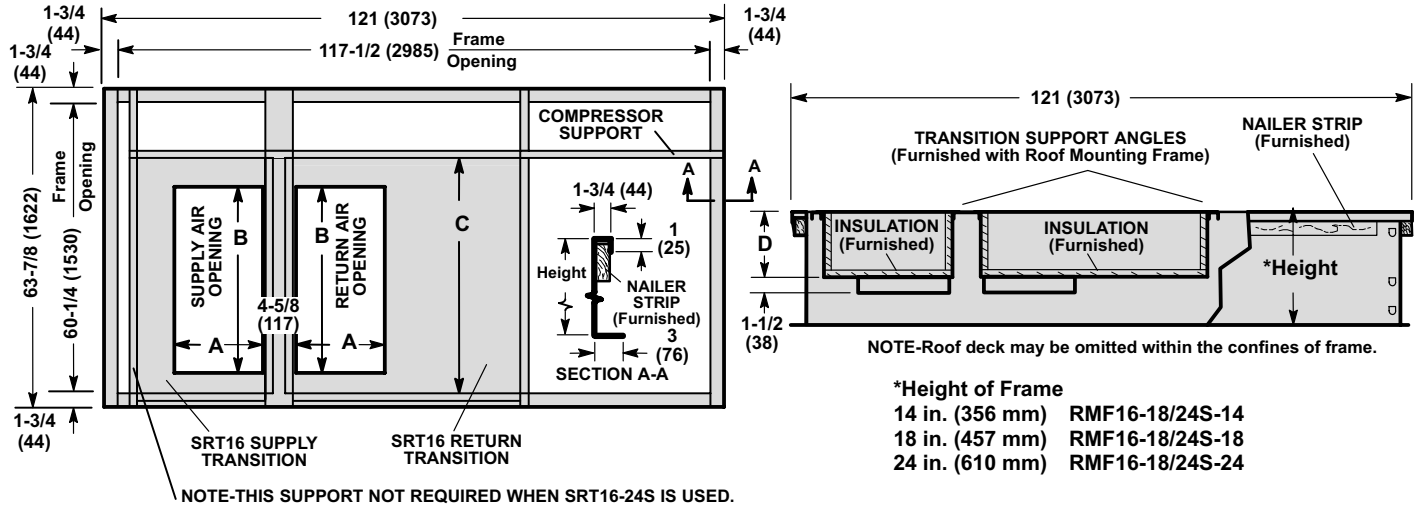

*Height of Frame
14 in. (356 mm) RMF16-18/24S-14
18 in. (457 mm) RMF16-18/24S-18
24 in. (610 mm) RMF16-18/24S-24

Model No.	A		B		C		D	
	in.	mm	in.	mm	in.	mm	in.	mm
RMF16-18/24 with SRT16-18	18	457	36	914	45	1143	8	203
RMF16-16/24 with SRT16-24	24	610	48	1219	50	1270	12	305

ACCESSORY DIMENSIONS - INCHES (MM)

COMBINATION CEILING SUPPLY AND RETURN DIFFUSERS

STEP-DOWN CEILING DIFFUSER

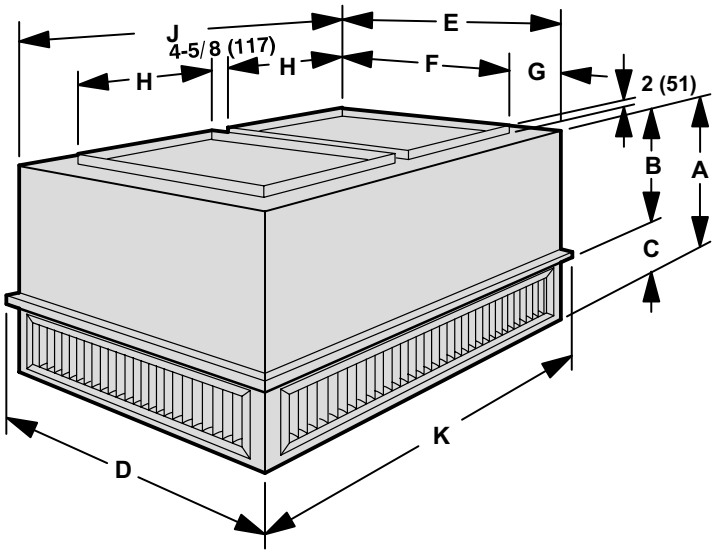

FLUSH CEILING DIFFUSER

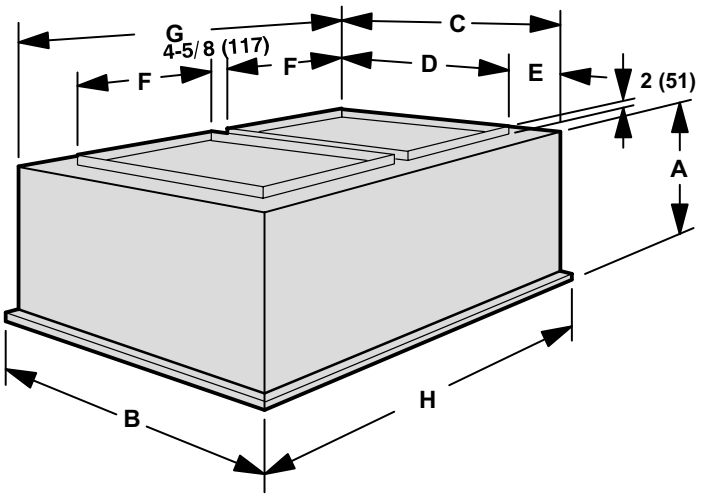

Model Number	A		B		C		D		E	
	in.	mm	in.	mm	in.	mm	in.	mm	in.	mm
RTD11-185	34	864	23-7/8	606	10-1/8	257	47-5/8	1210	45-5/8	1159
RTD11-275	40	1016	28-7/8	225	11-1/8	283	59-5/8	1514	57-7/8	1470

Model Number	F		G		H		J		K	
	in.	mm	in.	mm	in.	mm	in.	mm	in.	mm
RTD11-185	36	914	4-13/16	122	18	457	45-5/8	1159	47-5/8	1210
RTD11-275	48	1219	4-13/16	122	24	610	57-5/8	1464	59-5/8	1521

Model Number	A		B		C		D	
	in.	mm	in.	mm	in.	mm	in.	mm
FD11-185	30-1/8	613	47-5/8	1210	45-5/8	1159	36	914
FD11-275	36-1/8	918	59-5/8	1514	57-5/8	1464	48	1219

Model Number	E		F		G		H	
	in.	mm	in.	mm	in.	mm	in.	mm
FD11-185	4-13/16	122	18	457	45-5/8	1159	47-5/8	1210
FD11-275	4-13/16	122	24	610	57-5/8	1464	59-5/8	1521

CHA16 UNIT WITH OAD16 OUTDOOR AIR DAMPER SECTION
DOWN-FLOW SUPPLY AND RETURN AIR

NOTE - For Horizontal (Side) Supply And Return Air, OAD16 Field Installs on Return Air Duct Panel Kit not required for horizontal applications.

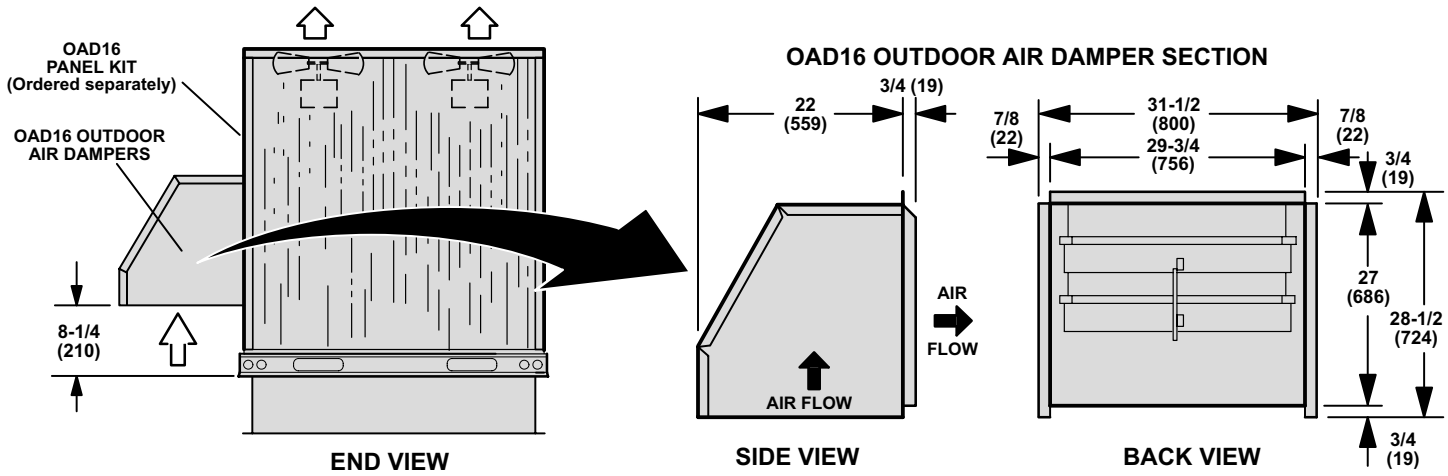

GUIDE SPECIFICATIONS

General

- Furnish and install a single package air to air DX mechanical cooling system complete with automatic controls.
- The single package unit shall be a standard product of a firm regularly engaged in the manufacture of heating-cooling equipment.
- The manufacturer shall have parts and service available throughout the U.S. and Canada.
- The manufacturer shall test operate system at the factory before shipment.

Air Distribution

- Equipment shall be capable of bottom (down-flow) or side (horizontal) handling of conditioned air.

Approvals

- All electrical components shall have UL and CSA Listing. All wiring shall be in compliance with NEC and CEC.
- Shall be rated and certified in accordance with the ULE certification program, which is based on ARI Standard 340/360-2000.

Equipment Warranty

- Compressors have a limited warranty for a full five years.
- All other components have a limited warranty for one year.
- Refer to the Lennox Equipment Limited Warranty certificate for details.

Cooling System

- The coils shall be non-ferrous construction with aluminum fins mechanically bonded to durable copper tubes. Coils shall be pressure leak tested.
Condenser coil shall be formed coil construction.
- Compressors shall be resiliently mounted and have overload protection. The refrigeration system shall have discharge, suction and liquid line service gauge ports, driers, freezestats and full refrigerant charge.
- Control option available shall consist of low ambient controls.

Cabinet

- Shall be galvanized steel with a powdered enamel paint finish electrostatically bonded to the metal.
- Cabinet panels where conditioned air is handled shall be fully insulated to prevent sweating and minimize sound. Openings shall be provided for power connection entry. Bottom power entry shall be furnished.
- Evaporator coil condensate drain extended outside cabinet shall be provided.
- Lifting holes in full perimeter base rails shall be provided for rigging.

Service Access

- Large removeable panels shall allow complete service access to compressor/heating/controls, blower and air filter/economizer compartments.

Supply Air Blowers

- Centrifugal supply air blower shall have permanently lubricated ball bearings and adjustable belt drive.
- Motor mount base shall permit ease of motor changeover and belt tension adjustment with a belt tensioning lead screw.
- Blower wheel shall be statically and dynamically balanced.
- Supply air blower motor shall have ball bearings.

Condenser Fans

- Direct drive propeller type condenser fans shall discharge vertically.
- Fan motor shall have ball bearings and be permanently lubricated and inherently protected.
- Fans shall have a safety guard.

Air Filters

- Disposable 2 inch (51 mm) pleated MERV 7 rated filters (Minimum Efficiency Reporting Value based on ASHRAE 52.2) shall be furnished.

OPTIONAL ACCESSORIES

Ceiling Diffusers

- Furnish and install a (flush or stepdown) optional combination ceiling supply and return air diffuser.

Ceiling Diffuser Supply and Return Air Transitions

- Supply and return transitions shall be available, for field installation in the roof mounting frame, to facilitate duct connection to the diffuser.

Coil Guards

- PVC (polyvinyl chloride) coil guards shall be available for field installation to protect outdoor coils from damage.

Control Systems

- Shall provide a selection of thermostats and related controls to automatically operate the mechanical equipment through the heating or cooling and ventilating cycles as required.

Economizer Damper Section

- Furnish and install economizer complete with recirculated air dampers, outside air dampers, damper actuator and controls.
- Low leakage dampers shall ride in nylon bearings. The economizer section shall provide for the introduction of up to 100% outdoor air for minimum ventilation and free cooling.
- Integrated economizer cycle shall allow compressors to cycle for dehumidification and additional cooling, as needed, with 100% outdoor air intake.
- Damper actuator shall be 24 volt, fully modulating spring return. Controls shall include fixed 55 °F (13 °C) mixed air controller, damper actuator, adjustable minimum position switch and solid-state adjustable outdoor air enthalpy control.
- Damper hood (required and ordered separately) with filters shall be galvanized steel with a powdered enamel paint finish electrostatically bonded to the metal.
- Gravity exhaust dampers shall be required and ordered separately for down-flow air applications and optional for horizontal applications.

Economizer Gravity Exhaust Dampers

- Pressure operated dampers shall be required for field installation on economizer in down-flow air applications.
- Dampers shall be available as an option for field installation in return air duct for horizontal air applications.
- Neoprene coated fiberglass dampers shall prevent blow-back and outdoor air infiltration during off cycle.

Economizer Power Exhaust Fans

- Shall be available for all models with economizer (down-flow applications only).
- Direct drive propeller type fans shall exhaust air through optional gravity exhaust dampers (required).
- Motor shall be overload protected.
- Fans shall be field installed between economizer and gravity exhaust dampers.

Electric Heaters

- Electric heaters shall be available for field installation.
Heating elements shall be nichrome bare wire exposed directly to the air stream. Time delays shall bring the elements on and off in sequence with a time delay between each element.
- Limit controls shall provide overload and short circuit protection.
- Optional unit fuse block shall be required on electric heaters.

Hail Guards

- Hail guards shall be available for field installation to protect outdoor coils from damage.

Horizontal Supply & Return Air Kit

- Optional kit shall provide necessary cabinet parts to field convert unit for side (horizontal) supply and return air duct connections.

Outdoor Air Damper Section

- Outdoor dampers shall be available to provide outdoor air requirements of up to 25%.
- Shall be available for manual or automatic (with optional motorized damper kit) operation.
- Hood with filters shall be galvanized steel with a powdered enamel paint finish electrostatically bonded to the metal.
- Damper/hood assembly shall be field installed external to the unit in down-flow applications.
- Optional panel kit that replaces unit panel shall be required for damper/hood installation in down-flow applications.
- Damper/hood assembly field shall be field installed in return air duct in in horizontal applications.

Roof Mounting Frame

- Mechanical contractor shall install a steel roof mounting frame for bottom discharge and return air duct connection.
- Shall mate to the bottom perimeter of the equipment.
- When flashed into the roof it shall make a unit mounting curb and provide weatherproof duct connection and entry into the conditioned area.
- Flashing shall be the responsibility of a roofing contractor.
- RMF16 frame shall be approved by U.S. National Roofing Contractors Association.