LENNOX

ENGINEERING DATA

AIR CONDITIONERS

HS29

ELITE SERIES®
SEER - up to 12.95
1 to 5 Tons
Cooling Capacity - 12,000 to 62,500 Btuh

Bulletin No. 210304
October 2004
Supersedes September 2003

CERTIFICATION APPLIES ONLY WHEN THE COMPLETE SYSTEM IS LISTED WITH ARI

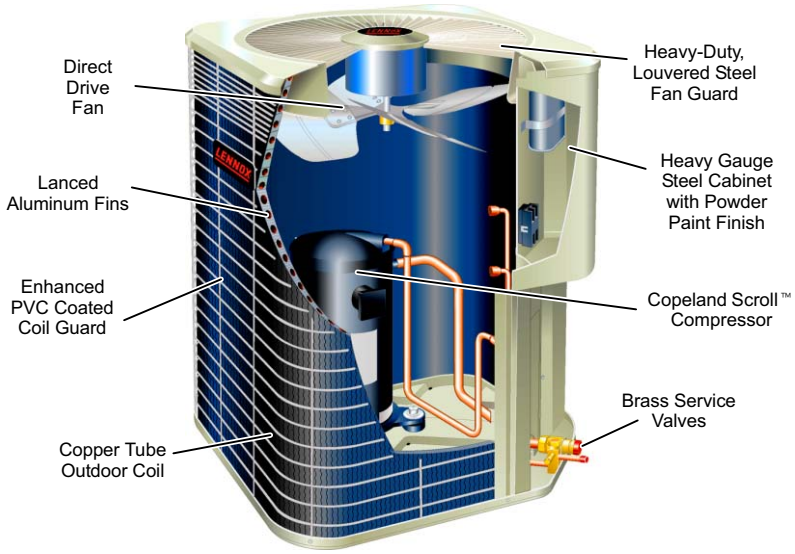

VERIFIED
Energy Performance Rendement Énergétique
VÉRIFIÉ

REGISTERED QUALITY SYSTEMS

MODEL NUMBER IDENTIFICATION

HS 29 - 036 - 3 P

Unit Type
HS = High Side Air Conditioner

Series

Nominal Cooling Capacity
012 = 1 ton (3.5 kW)
018 = 1.5 tons (5.3 kW)
024 = 2 tons (7.0 kW)
030 = 2.5 tons (8.8 kW)
036 = 3 tons (10.6 kW)
042 = 3.5 tons (12.3 kW)
048 = 4 tons (14.1 kW)
060 = 5 tons (17.6 kW)
062 = 5+ tons (17.6+ kW)

Minor Revision Number

Voltage
P = 208/230V-1 phase-60hz
Y = 208/230V-3 phase-60hz
G = 460V-3 phase-60hz
J = 575V-3 phase-60hz

FEATURES

CONTENTS

ARI Rating Tables . . . . . Pages 8-17
Dimensions . . . . . Page 7
Expanded Ratings . . . . . Pages 18-71
Features . . . . . Pages 1-3
Field Wiring . . . . . Page 6
Installation Clearances . . . . . Page 7
Model Number Identification . . . . . Page 1
Optional Accessories . . . . . Page 6
Outdoor Sound Data . . . . . Page 3
Specifications . . . . . Pages 4-5

WARRANTY

Compressor - Ten year limited warranty in residential applications, five year limited warranty in non-residential applications. All other covered components - Five year limited warranty in residential applications, one year limited warranty in non-residential applications.

Refer to Lennox Equipment Limited Warranty certificate included with unit for specific details.

Visit us at www.lennox.com
For the latest technical information, www.davenet.com

NOTE - Due to Lennox' ongoing committment to quality, Specifications, Ratings and Dimensions subject to change without notice and without incurring liability.
Improper installation, adjustment, alteration, service or maintenance can cause property damage or personal injury.
Installation and service must be performed by a qualified installer and servicing agency.

©2004 Lennox Industries Inc.

FEATURES

APPLICATION

SEER up to 12.95.
1 through 5+ ton (3.5 through 17.6+ kW) matches with TXV or RFC.
Single or three phase power supply.
Vertical air discharge allows concealment behind shrubs at grade level or out of sight on a roof.
Matching add-on furnace indoor coils or air handlers provide a wide range of cooling capacities and applications. See ARI Ratings table.
For indoor unit data, see Indoor Coils and Air Handlers sections.
Units shipped completely factory assembled, piped and wired.
Each unit is test operated at the factory ensuring proper operation.
Installer must set air conditioning unit, connect refrigerant lines and make electrical connections to complete job.

APPROVALS

Certified in accordance with the USE certification program, which is based on ARI Standard 210/240-2003.
Sound rated in Lennox reverberant sound test room in accordance with test conditions included in ARI Standard 270-95.
Tested in the Lennox Research Laboratory environmental test room.
Rated according to US Department of Energy (DOE) test procedures and approved rating methods.
Air Conditioning units and components within bonded for grounding to meet safety standards for servicing required by UL, NEC and CEC.
Units are UL and ULC listed.
Energy rating verified by CSA.
ISO 9001 Registered Manufacturing Quality System.

REFRIGERATION SYSTEM

Refrigerant Flow Control

Units applicable to expansion valve systems or RFC systems when matched with specific evaporator coils.
RFCIV:
Accurately meters refrigerant in system.
Refrigerant control is accomplished by exact sizing of refrigerant metering orifice.
The principle involves matching evaporator coil with proper bore size of orifice in metering device.

RFCIV METERING SYSTEM

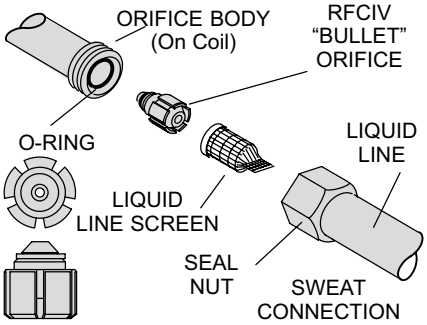

Equalizes pressure shortly after compressor stops, unit starts unloaded, eliminating need for additional controls.
Furnished with air conditioning unit.

Copper Tube/Enhanced Fin Coil

Lennox designed and fabricated coil.
Ripple-edged aluminum fins.
Copper tube construction.
Lanced fins provide maximum exposure of fin surface to air stream resulting in excellent heat transfer.
Fin collars grip tubing for maximum contact area.
Flared shoulder tubing connections/silver soldering construction.
Coil is factory tested under high pressure to insure leakproof construction.
Entire coil is accessible for cleaning.
PVC coated steel wire coil guard furnished as standard.

Outdoor Fan

Direct drive fan moves large air volumes uniformly through entire outdoor coil for high refrigerant cooling capacity.
Vertical air discharge minimizes operating sounds and eliminates damage to lawn and shrubs.
Fan motor has sleeve bearings and is inherently protected.
Motor totally enclosed for maximum protection from weather, dust and corrosion.
Rain shield on motor provides additional protection from moisture.
Louvered steel top fan guard furnished as standard.
Fan service access accomplished by removal of top panel.

OPTIONS

Expansion Valve Kits (Expansion Valve Systems)

Must be ordered extra and field installed on certain evaporator units. See ARI Ratings table.

High Pressure Switch Kit

Protects the system from high pressure conditions that can be a result of fan failure or a blocked/dirty coil.
Manual reset.

Loss of Charge Kit

Helps protect the compressor from damage due to a loss of refrigerant charge.
SPST, normally-closed switch, automatic reset.

Refrigerant Line Kits

Refrigerant lines (suction & liquid) are shipped refrigeration clean.
Lines are cleaned, dried, pressurized and sealed at factory.
Suction line fully insulated.
L15 lines are stubbed at both ends.
Kits are not available for HS29-060-062 models and must be field fabricated.

CABINET

Heavy gauge steel cabinet with five station metal wash process.
Powder paint finish provides superior rust and corrosion protection.
Painted base section.
Control box is conveniently located with all controls factory wired.
Corner patch plate allows access to compressor.
Drainage holes are provided in base section for moisture removal.

Refrigerant Line Connections, Electrical Inlets, Service Valves

Sweat connection suction and liquid lines are located on corner of unit cabinet.
Fully serviceable brass service valves prevent corrosion and provide access to refrigerant system. Suction valve can be fully shut off, while liquid valve may be front seated to manage refrigerant charge while servicing system.
45° elbow furnished for ease of suction line connection.
HS29-012-018-024-030 models are stubbed with 3/8 in. (9.5 mm) liquid line connection. 3/8 in. x 5/16 in. (9.5 mm x 7.9 mm) reducer bushing furnished for liquid line connection.
Refrigerant line connections and field wiring inlets are located in one central area of cabinet for easy access. See dimension drawing.

OPTIONS

Hail Guards

Constructed of louvered heavy gauge steel painted to match cabinet.
Surrounds unit on all four sides to prevent damage to the coil.

Mounting Base

High density polyethylene mounting base is lightweight, sturdy, sound absorbing and will withstand the effects of sun, heat, cold, moisture, oil and refrigerant.
Provides permanent foundation for air conditioning units.
22-1/4 x 22-1/4 x 3 in. (565 x 565 x 76 mm) shipping weight 6 lbs. (3 kg) each.

Unit Stand-Off Kit

Black high density polyethylene feet are available to raise unit off of mounting surface away from damaging moisture.
Four feet are furnished per order number.

FEATURES

COMPRESSOR

Reciprocating Compressor (HS29-012-018, 1-phase models and HS29-036, 3-phase models)

Designed for dependable efficiency with minimum operating cost.
Suction cooled and overload protected with internal pressure relief.
Hermetically sealed with built-in protection from excessive current and temperatures.
Crankcase heater assures proper compressor lubrication (three phase models only).
Running gear assembly resiliently suspended internally inside case.
Compressor installed in unit on resilient rubber mounts assuring low sound and vibration free operation.
HS29-012 model equipped with rotary compressor
HS29-036 3-phase models have an internal crankcase heater.

Copeland Scroll™ Compressor (HS29-024 thru -060, 1-phase models and HS29-042 thru -062, 3-phase models)

Compressor features high efficiency with uniform suction flow, constant discharge flow and high volumetric efficiency and quiet operation.
Compressor consists of two involute spiral scrolls matched together to generate a series of crescent shaped gas pockets between them.
During compression, one scroll remains stationary while the other scroll orbits around it.
Gas is drawn into the outer pocket, the pocket is sealed as the scroll rotates.
As the spiral movement continues, gas pockets are pushed to the center of the scrolls. Volume between the pockets is simultaneously reduced.
When pocket reaches the center, gas is now at high pressure and is forced out of a port located in the center of the fixed scrolls.
During compression, several pockets are compressed simultaneously resulting in a smooth continuous compression cycle.
Continuous flank contact, maintained by centrifugal force, minimizes gas leakage and maximizes efficiency.
Scroll compressor is tolerant to the effects of slugging and contaminants. If this occurs, scrolls separate, allowing liquid or contaminants to to be worked toward the center and discharged.
Low gas pulses during compression reduces operational sound levels.
Compressor motor is internally protected from excessive current and temperature.
Compressor is installed in the unit on resilient rubber mounts for vibration free operation.

Start Controls

Furnished on HS29-012 and-018 models.
Provides assistance for compressor start under loaded conditions or in case of low voltage.

OPTIONS

Compressor Low Ambient Cut-Out

Non-adjustable switch (low ambient cut-out) prevents compressor operation when outdoor temperature is below 35°F (2°C).

Crankcase Heater

Crankcase heater prevents migration of liquid refrigerant into compressor and ensures proper compressor lubrication.
Not available for HS29-036 3-phase models.

Compressor Hard Start Kit

Single-phase units are equipped with a PSC compressor motor. This type of motor normally doesn't need a potential relay and start capacitor.
In applications where compressor is required to start when discharge and suction pressures have not equalized or under low voltage conditions, kit may be required to increase compressor starting torque.

Compressor Sound Cover

A reinforced vinyl compressor cover containing a 1-1/2 inch (38.1 mm) thick batt of fiberglass insulation.
All open edges are sealed with a one-inch wide hook and loop fastening tape.

CONTROLS

OPTIONS

Freezestat

Installs on or near the discharge line of the evaporator or on the suction line.
Senses suction line temperature and cycles the compressor off when suction line temperature falls below it's setpoint.
Opens at 29°F (-2°C) and closes at 58°F (14°C).

Low Ambient Kit (Expansion Valve Systems Only)

Air conditioning units operate satisfactorily down to 45°F (7°C) outdoor air temperature without any additional controls.
Low Ambient Control Kit can be field installed, allowing unit operation down to 30°F (-1°C).

Thermostat

Thermostat not furnished with unit. See Thermostats bulletin in the Controls tab \section and Lennox Price Book.

Timed-Off Control

Prevents compressor short-cycling and allows time for suction and discharge pressure to equalize.
Permits compressor start-up in an unloaded condition.
Automatic reset with 5 minute delay between compressor shut-off and start-up.

OUTDOOR SOUND DATA

[1] Model Number	Octave Band Sound Power Levels dBA, re 10^{-12} Watts							[1] Sound Rating Number (dB)
	125	250	500	1000	2000	4000	8000	
HS29-012	N/A	N/A	N/A	N/A	N/A	N/A	N/A	74
HS29-018	70	69	70	68	69	63	61	76
HS29-024	71	71	70	70	68	64	62	76
HS29-030	71	66	70	73	66	65	62	76
HS29-036	71	68	71	73	67	64	61	78
HS29-042	71	70	72	72	69	66	64	78
HS29-048	76	73	76	75	73	69	64	80
HS29-060	75	73	76	76	73	70	64	80

NOTE - the octave sound power data does not include tonal correction.
[1] Tested according to ARI Standard 270-95 test conditions.

SPECIFICATIONS - 1 PHASE

Cooling Data	Model No.	HS29-012	HS29-018	HS29-024	HS29-030
	Nominal Tonnage (kW)	1 (3.5)	1.5 (5.3)	2 (7.0)	2.5 (8.8)
[1] Sound Rating Number (dB)		74	76	76	78
Connections (sweat)	Liquid line o.d. - in. (mm)	[2] 3/8 (9.5)	[2] 3/8 (9.5)	[2] 3/8 (9.5)	[2] 3/8 (9.5)
	Suction line o.d. - in. (mm)	5/8 (15.9)	5/8 (15.9)	3/4 (19.1)	3/4 (19.1)
[3] Refrigerant (HCFC-22) furnished		2 lbs. 10 oz. (1.19 kg)	3 lbs. 12 oz. (1.70 kg)	3 lbs. 10 oz. (1.64 kg)	4 lbs. 1 oz. (1.84 kg)
Outdoor Coil	Net face area - sq. ft. (m^2) Outer	7.56 (0.70)	11.33 (1.05)	11.33 (1.05)	13.22 (1.23)
	Tube diameter - in. (mm)	5/16 (7.9)	5/16 (7.9)	5/16 (7.9)	5/16 (7.9)
	No. of rows	1	1	1	1
	Fins per inch (m)	22 (866)	22 (866)	22 (866)	18 (748)
Outdoor Fan	Diameter - in. (mm) & no. of blades	18 (457) - 3	18 (457) - 3	18 (457) - 3	18 (457) - 3
	Motor hp (W)	1/6 (124)	1/6 (124)	1/6 (124)	1/6 (124)
	Cfm (L/s)	2400 (1135)	2400 (1135)	2400 (1135)	2454 (1200)
	Rpm	1105	1105	1105	1110
	Watts	180	180	180	195
Shipping weight - lbs. (kg) 1 package		107 (49)	140 (64)	143 (65)	140 (64)
ELECTRICAL DATA					
	Line voltage data - 1 phase	208/230V	208/230V	208/230V	208/230V
	[4] Maximum overcurrent protection (amps)	15	20	25	30
	[5] Minimum circuit ampacity	7.3	11.9	16.4	19.5
Compressor	Rated load amps	4.9	8.6	12.2	14.7
	Locked rotor amps	26.3	49	61	84
	Power Factor	.97	.97	.96	.90
Outdoor Fan Motor	Full load amps	1.1	1.1	1.1	1.1
	Locked rotor amps	1.9	1.9	1.9	1.9

SPECIFICATIONS - 1 PHASE

Cooling Data	Model No.	HS29-036	HS29-042	HS29-048	HS29-060
	Nominal Size - Tons (kW)	3 (10.6)	3.5 (12.3)	4 (14.1)	5 (17.6)
[1] Sound Rating Number (dB)		78	78	80	80
Connections (sweat)	Liquid line o.d. - in. (mm)	3/8 (9.5)	3/8 (9.5)	3/8 (9.5)	3/8 (9.5)
	Suction line o.d. - in. (mm)	3/4 (19.1)	7/8 (22.2)	7/8 (22.2)	1-1/8 (28.6)
[3] Refrigerant (HCFC-22) furnished		4 lbs. 9 oz. (2.07 kg)	6 lbs. 0 oz. (2.72 kg)	6 lbs. 5 oz. (2.86 kg)	8 lbs. 0 oz. (3.63 kg)
Outdoor Coil	Net face area - sq. ft. (m^2) Outer Coil	15.11 (1.40)	15.11 (1.40)	15.11 (1.40)	15.11 (1.40)
	Inner Coil	- - -	5.40 (0.50)	5.40 (0.50)	14.40 (1.34)
	Tube diameter - in. (mm) & no. of rows	5/16 (7.9) - 1	5/16 (7.9) - 1.37	5/16 (7.9) - 1.37	5/16 (7.9) - 2
	Fins per inch (m)	22 (866)	18 (748)	18 (748)	18 (748)
Outdoor Fan	Diameter - in. (mm) & no. of blades	18 (457) - 4	18 (457) - 4	18 (457) - 4	18 (457) - 4
	Motor hp (W)	1/6 (124)	1/6 (124)	1/3 (249)	1/3 (249)
	Cfm (L/s)	2520 (1195)	2400 (1130)	3115 (1470)	2930 (1385)
	Rpm	1110	1075	1125	1100
	Watts	200	190	325	310
Shipping weight - lbs. (kg) 1 package		148 (67)	161 (73)	194 (88)	212 (96)
ELECTRICAL DATA					
	Line voltage data - 1 phase	208/230V	208/230V	208/230V	208/230V
	[4] Maximum overcurrent protection (amps)	35	40	45	60
	[5] Minimum circuit ampacity	21.1	23.5	25.9	38
Compressor	Rated load amps	16	17.9	19.2	28.8
	Locked rotor amps	100	103	137	148
	Power Factor	.91	.84	.98	.95
Outdoor Fan Motor	Full load amps	1.1	1.1	1.9	1.9
	Locked rotor amps	1.9	1.9	4.1	4.1

NOTE - Extremes of operating range are plus 10% and minus 5% of line voltage.

1 Sound Rating Number rated in accordance with test conditions included in ARI Standard 270.

2 3/8 x 5/16 in. (9.5 x 7.9 mm) adaptor furnished for liquid line connection.

3 Refrigerant charge is sufficient for 15 ft. (4.6 m) length line set.

4 Refer to National or Canadian Electrical Code manual to determine wire, fuse and disconnect size requirements.

5 HACR type breaker or fuse.

SPECIFICATIONS - 3 PHASE

General Data	Model No.	HS29-036	HS29-042	HS29-048	HS29-060	HS29-062
	Nominal Size - Tons (kW)	3 (10.6)	3.5 (12.3)	4 (14.1)	5 (17.6)	5+ (17.6+)
[1] Sound Rating Number (dB)		78	78	80	84	82
Connections (sweat)	Liquid line o.d. - in. (mm)	3/8 (9.5)	3/8 (9.5)	3/8 (9.5)	3/8 (9.5)	3/8 (9.5)
	Suction line o.d. - in. (mm)	3/4 (19.1)	7/8 (22.2)	7/8 (22.2)	1-1/8 (28.6)	1-1/8 (28.6)
[2] Refrigerant (HCFC-22) furnished		4 lbs. 13 oz. (2.18 kg)	6 lbs. 0 oz. (2.72 kg)	6 lbs. 0 oz. (2.72 kg)	8 lbs. 0 oz. (3.63 kg)	8 lbs. 0 oz. (3.63 kg)
Outdoor Coil	Net face area - sq. ft. (m^2) Outer	15.11 (1.40)	15.11 (1.40)	15.11 (1.40)	15.11 (1.40)	15.11 (1.40)
	Inner	- - -	5.40 (0.50)	5.40 (0.50)	14.40 (1.34)	14.40 (1.34)
	Tube diameter - in. (mm)	5/16 (7.9)	5/16 (7.9)	5/16 (7.9)	5/16 (7.9)	5/16 (7.9)
	Number of rows	1	1.37	1.37	2	2
	Fins per inch (m)	22 (866)	22 (866)	18 (748)	18 (748)	18 (748)
Outdoor Fan	Diameter - in. (mm)	18 (457)	18 (457)	18 (457)	18 (457)	18 (457)
	No. of blades	4	4	4	4	4
	Motor hp (W)	1/6 (124)	1/6 (124)	1/3 (249)	1/3 (249)	1/3 (249)
	Cfm (L/s)	2520 (1195)	2400 (1130)	3115 (1470)	2930 (1385)	2930 (1385)
	Rpm	1110	1075	1125	1100	1100
	Watts	200	190	325	310	310
Shipping Data - lbs. (kg) 1 package		145 (66)	158 (72)	191 (87)	207 (94)	254 (115)

ELECTRICAL DATA

	Line voltage data - 3 phase	208/230V	460V	208/230V	460V	208/230V	460V	575V	208/230V	460V	575V	208/230V	460V
	[3] Maximum overcurrent protection (amps)	20	10	25	10	30	15	10	35	15	10	40	20
	[4] Minimum circuit ampacity	14.0	6.9	16.6	7.8	17.9	8.9	7.3	21.2	10.2	8.3	25.1	12.2
Compressor	Rated load amps	10.3	5.1	12.4	5.8	12.8	6.4	5.1	15.4	7.4	5.9	18.6	9.0
	Locked rotor amps	77	39	88	44	91	46	437	125	59.6	49.4	128	62
	Power factor	.83	.83	.93	.93	.88	.88	.88	.86	.86	.86	.86	.86
Outdoor Fan Motor	Full load amps	1.1	0.55	1.1	0.55	1.9	0.9	0.9	1.9	0.9	0.9	1.9	0.9
	Locked rotor amps	1.9	1.0	1.9	1.0	4.1	2.1	2.1	4.1	2.1	2.1	4.1	2.1

NOTE - Extremes of operating range are plus 10% and minus 5% of line voltage.

[1] Sound Rating Number rated in accordance with test conditions included in ARI Standard 270.

[2] Refrigerant charge is sufficient for 15 ft. (4.6 m) length line set.

[3] HACR type breaker or fuse.

[4] Refer to National or Canadian Electrical Code manual to determine wire, fuse and disconnect size requirements.

OPTIONAL ACCESSORIES - MUST BE ORDERED EXTRA

Model No.			HS29								
			-012	-018	-024	-030	-036	-042	-048	-060	-062
Compressor Crankcase Heater	208/230V-1ph/3ph	**68887**	•	•							
	208/230V-1ph/3ph	**90P12**			•	•	•	•	•	•	•
	460V-3ph	**31J21**						•	•	•	•
	575V-3ph	**18M11**							•	•	
Compressor Hard Start Kit 1 Phase Only		**10J42**			•	•	•	•			
		81J69							•	•	
Compressor Low Ambient Cut-Off		**45F08**	•	•	•	•	•	•	•	•	•
Compressor Sound Cover		**69J17**			•						
	1 phase models	**69J03**				•	•	•	•	•	
	3 phase models	**53J40**					•				
Compressor Time-Off Control		**47J27**	•	•	•	•	•	•	•	•	•
Freezestat	3/8 in. tubing	**93G35**	•	•	•	•	•	•	•	•	•
	1/2 in. tubing	**39H29**	•	•	•	•	•	•	•	•	•
	5/8 in. tubing	**50A93**	•	•	•	•	•	•	•	•	•
Hail Guards		**17L71**	•	•	•						
		17L72				•					
		17L73					•	•	•	•	•
High Pressure Switch Kit		**94J46**	•	•	•	•	•	•	•	•	•
Loss of Charge Kit		**84M23**	•	•	•	•	•	•	•	•	•
Low Ambient Kit (TXV systems only)		**24H77**	•	•	•	•	•	•	•	•	•
Mounting Base		**69J06**	•	•	•	•	•	•	•	•	•
Refrigerant Line Sets	L15-21-15 L15-21-20 L15-21-25 L15-21-35 L15-21-50		•	•							
	L15-31-15 L15-31-20 L15-31-30 L15-31-40 L15-31-50				•	•					
	L15-41-15 L15-41-20 L15-41-30 L15-41-40 L15-41-50						•				
	L15-65-15 L15-65-30 L15-65-40 L15-65-50							•	•		
	Field Fabricate									•	•
Unit Stand-Off Kit		**94J45**	•	•	•	•	•	•	•	•	•

FIELD WIRING

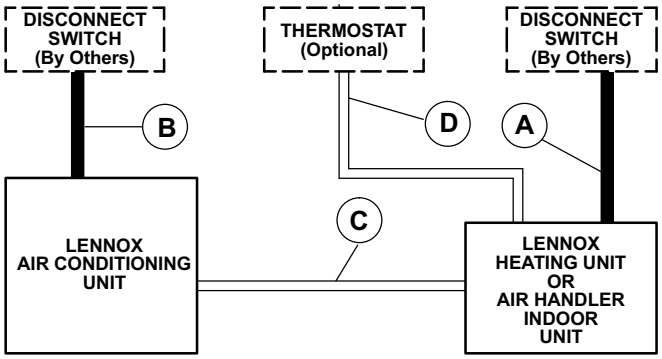

A — Two or Three Wire Power

B — Two or Three Wire Power — See Electrical Data

C — Two Wire Low Voltage — 18 ga. minimum

D — Four Wire Low Voltage (Electro-Mechanical) 18 ga. minimum

Five Wire Low Voltage (Electronic) 18 ga. minimum

NOTE — Field Wiring Not Furnished

All wiring must conform to NEC or CEC and local electrical codes.

DIMENSIONS - INCHES (MM)

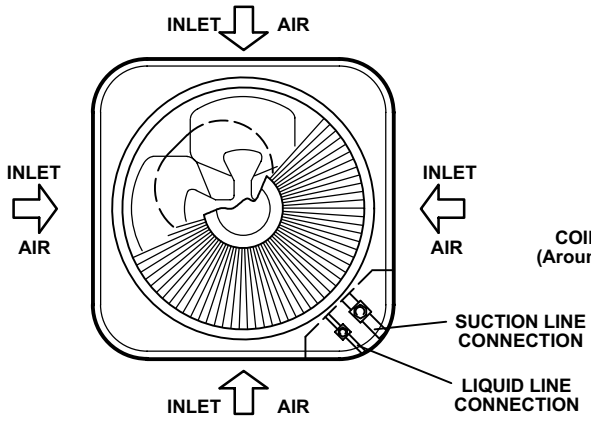

TOP VIEW

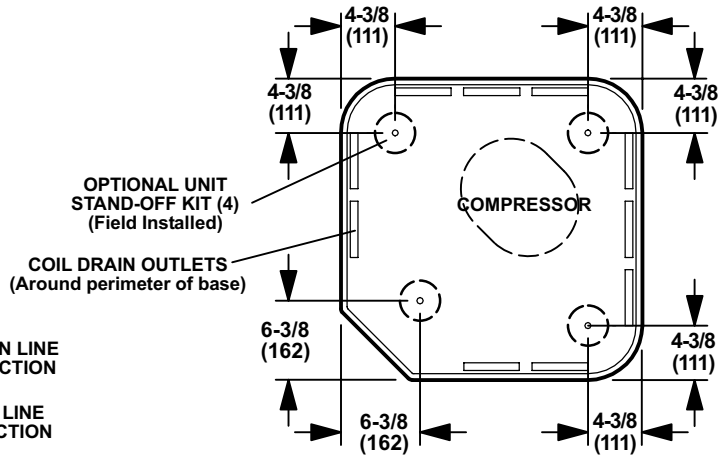

TOP VIEW BASE SECTION

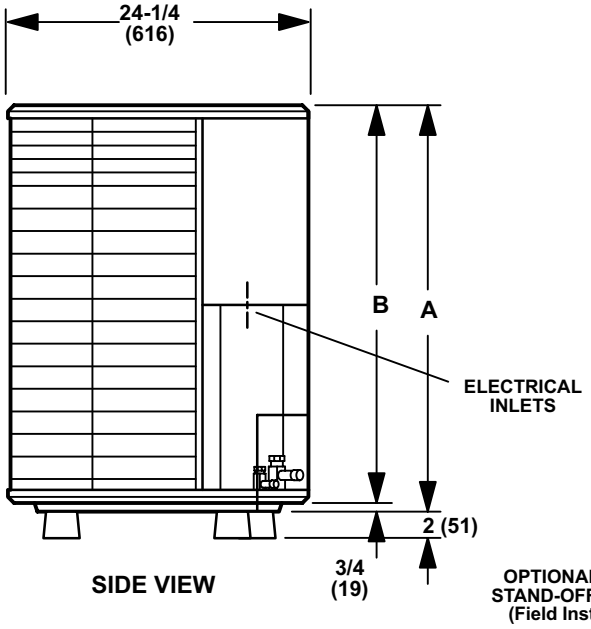

SIDE VIEW

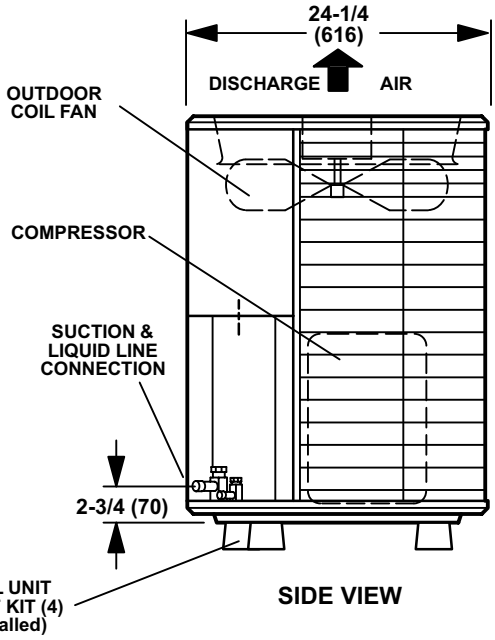

SIDE VIEW

Model No.		A	B
HS29-012, HS29-018 HS29-024	in.	25	24-1/4
	mm	635	616
HS29-030	in.	29	28-1/4
	mm	737	718
HS29-036, HS29-042 HS29-048, HS29-060, HS29-062	in.	33	32-1/4
	mm	838	819

INSTALLATION CLEARANCES - INCHES (MM)

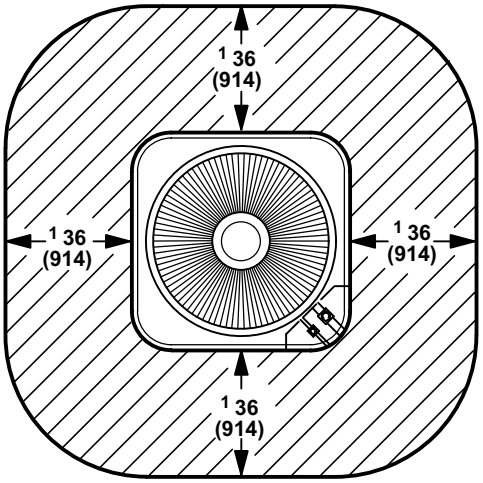

[1] One of the coil sides adjacent to control box must be 30 in. (762 mm) for service.
One of the remaining sides may be 12 in. (914 mm)
One of the remaining sides may be 6 inches (305 mm)

NOTE — 48 in. (1219 mm) clearance required on top of unit.

NOTE — 24 in. (610 mm) required between two units

Outdoor Unit Model No. Unit Size [1] Sound Rating Number		[2] ARI Standard 210/240 Ratings Cooling Capacity Btuh	kW	Efficiency SEER	EER	Total Unit Watts	Indoor Unit Model No.	Refrigerant Metering Device
HS29-012 1 Ton (74 dB) 1 phase	**Expansion Valve**							
	Up-Flow Indoor Coils	12,600	3.7	11.00	10.35	1220	[3] C33-18A	[6] **26K49** Order separately
		12,900	3.8	11.20	10.50	1230	C33-24A/B	[6] **26K49** Order separately
		13,100	3.8	11.35	10.65	1230	C33-30A/B	[6] **26K49** Order separately
	Down-Flow Indoor Coils	12,600	3.7	11.00	10.35	1220	CR26-18N-F	**26K49** Order separately
	Horizontal Indoor Coils	12,300	3.6	10.80	10.10	1215	CH23-21	**26K49** Order separately
		12,400	3.6	10.85	10.20	1215	CH33-18A-2F	[6] **26K49** Order separately
		12,500	3.7	10.90	10.30	1215	CH23-31	**26K49** Order separately
		13,300	3.9	11.45	10.75	1235	CH33-36A/B/C-2F	[6] **26K49** Order separately
	Air Handlers	12,600	3.7	10.85	10.20	1235	CB29M-21/26 (Multi-Position)	Factory Installed
		12,600	3.7	10.85	10.20	1235	CB28UH-018/024 (Up-Flow/Horizontal)	Factory Installed
		13,600	4.0	11.30	10.65	1275	CB30M-21/26 (Multi-Position)	Factory Installed
		13,600	4.0	11.30	10.65	1275	CB30U-21/26 (Up-Flow)	Factory Installed
		12,900	3.8	10.90	10.25	1260	[4] CVP10-26/EC10Q3 (Up-Flow)	Factory Installed
	RFCIV Metering Orifice							
	Up-Flow Indoor Coils	11,900	3.5	10.10	9.90	1200	C33-24A/B	[5] 0.045 **(83M54)**
		12,100	3.5	10.25	10.05	1205	C33-30A/B	[5] 0.045 **(83M54)**
	Down-Flow Indoor Coils	11,800	3.5	10.05	9.85	1200	CR26-30N-F	[5] 0.045 **(83M54)**
	Horizontal Indoor Coils	12,600	3.7	10.50	10.35	1215	CH33-36A/B/C-2F	[5] 0.045 **(83M54)**
HS29-018 1.5 Ton (76 dB) 1 phase	**Expansion Valve**							
	Up-Flow Indoor Coils	17,800	5.2	10.75	9.75	1830	C33-18A	[6] **26K49** Order separately
		18,800	5.5	11.30	10.15	1850	[3] C33-24A/B	[6] **26K49** Order separately
		19,100	5.6	11.45	10.30	1855	C33-30A/B	[6] **26K49** Order separately
	Down-Flow Indoor Coils	17,600	5.2	10.70	9.65	1825	CR26-18N-F	**26K49** Order separately
	Horizontal Indoor Coils	18,000	5.3	10.90	9.80	1835	CH23-21	**26K49** Order separately
		18,200	5.3	11.00	9.90	1840	CH23-31	**26K49** Order separately
		19,000	5.6	11.40	10.25	1850	CH33-24/30A-2F	[6] **26K49** Order separately
		19,300	5.7	11.60	10.40	1860	CH33-36A/B/C-2F	[6] **26K49** Order separately
	Air Handlers	18,300	5.4	11.05	10.00	1830	CB29M-21/26 (Multi-Position)	Factory Installed
		18,300	5.4	11.05	10.00	1830	CB28UH-018/024 (Up-Flow/Horizontal)	Factory Installed
		18,300	5.4	11.10	10.05	1825	CB30M-21/26 (Multi-Position)	Factory Installed
		18,300	5.4	11.10	10.05	1825	CB30U-21/26 (Multi-Position)	Factory Installed
		18,200	5.3	11.00	9.90	1840	[4] CVP10-26/EC10Q3 (Up-Flow)	Factory Installed
	RFCIV Metering Orifice							
	Up-Flow Indoor Coils	18,000	5.3	10.35	9.85	1825	C33-18A	[5] 0.057 **(42J40)**
		19,000	5.6	10.80	10.35	1840	C33-24A/B	[5] 0.057 **(42J40)**
		19,300	5.7	11.00	10.45	1850	C33-30A/B	[5] 0.057 **(42J40)**
	Down-Flow Indoor Coils	17,900	5.2	10.40	9.85	1820	CR26-18N-F	[5] 0.057 **(42J40)**
	Horizontal Indoor Coils	18,200	5.3	10.50	9.95	1830	CH23-21	[5] 0.057 **(42J40)**
		18,400	5.4	10.55	10.05	1835	CH23-31	[5] 0.057 **(42J40)**
		19,200	5.6	10.90	10.40	1845	CH33-24/30A-2F	[5] 0.057 **(42J40)**
		19,600	5.7	11.20	10.60	1850	CH33-36A/B/C-2F	[5] 0.057 **(42J40)**

NOTE - Ratings for all C33 Indoor Coils include both cased and uncased Indoor Coils.

1 Sound Rating Number rated in accordance with test conditions included in ARI Standard 270.

2 Certified in accordance with USE certification program which is based on ARI Standard 210/240; 95°F (35°C) outdoor air temperature, 80°F (27°C) db / 67°F (19°C) wb entering evaporator air with 25 ft. (7.6 m) of connecting refrigerant lines.

3 Most popular evaporator coil.

4 Canada Only

5 RFCIV metering device is furnished with air conditioning unit for field installation in indoor unit.

6 **Factory installed RFC or expansion valve on indoor unit MUST be replaced with valve specified, order separately.**

ARI RATINGS — 2 TON

Outdoor Unit Model No. Unit Size [1] Sound Rating Number		[2] ARI Standard 210/240 Ratings: Cooling Capacity Btuh	Cooling Capacity kW	Efficiency SEER	Efficiency EER	Total Unit Watts	Indoor Unit Model No.	Refrigerant Metering Device
HS29-024 2 Ton (76 dB) 1 phase	**Expansion Valve**							
	Up-Flow Indoor Coils	24,400	7.2	11.50	10.00	2445	C33-24A/B	[7] **26K49** Order separately
		24,800	7.3	11.65	10.10	2450	[3] C33-30A/B	[7] **26K49** Order separately
	Up-Flow Indoor Coils/ Furnace	25,200	7.4	12.40	10.75	2345	C33-24C with G61MPV-36C-090	[7] **26K49** Order separately
		25,400	7.4	12.35	10.70	2375	C33-24A/B with [6] G60UHV-36A/B	[7] **26K49** Order separately
		25,400	7.4	12.30	10.65	2380	C33-24B with [6] G61MPV-36B	[7] **26K49** Order separately
		25,600	7.5	12.55	10.90	2350	C33-30C with G61MPV-36C-090	[7] **26K49** Order separately
		25,800	7.6	12.55	10.85	2380	C33-30A/B with [6] G60UHV-36A/B	[7] **26K49** Order separately
		25,800	7.6	12.70	10.95	2355	C33-36C with G61MPV-36C-090	[7] **26K49** Order separately
		25,800	7.6	12.50	10.80	2385	C33-30B with [6] G61MPV-36B	[7] **26K49** Order separately
		26,200	7.7	12.65	11.00	2385	C33-36A/B with [6] G60UHV-36A/B	[7] **26K49** Order separately
		26,200	7.7	12.60	10.95	2390	C33-36B with [6] G61MPV-36B	[7] **26K49** Order separately
		27,000	7.9	13.05	11.25	2395	C33-38A/B with [6] G60UHV-36A/B	[7] **26K49** Order separately
		27,000	7.9	12.95	11.25	2395	C33-38B with [6] G61MPV-36B	[7] **26K49** Order separately
	Down-Flow Indoor Coils	22,600	6.6	10.75	9.30	2425	CR26-18N-F	**26K49** Order separately
		25,000	7.3	11.70	10.20	2450	CR26-30N-F	**26K49** Order separately
	Horizontal Indoor Coils	23,800	7.0	11.25	9.75	2435	CH23-31	**26K49** Order separately
		24,800	7.3	11.60	10.10	2450	CH33-24/30A-2F	[7] **26K49** Order separately
		25,200	7.4	11.85	10.25	2455	CH23-41	**26K49** Order separately
		25,200	7.4	11.75	10.25	2455	CH33-36A/B/C-2F	[7] **26K49** Order separately
	Horizontal Indoor Coils/ Furnace	25,800	7.6	12.45	10.85	2380	CH33-24/30A-2F w/ G60UHV-36A-070	[7] **26K49** Order separately
		25,800	7.6	12.70	10.95	2355	CH33-36C-2F with G61MPV-36C-090	[7] **26K49** Order separately
		26,000	7.6	12.65	10.90	2385	CH33-36A/B-2F w/ [6] G60UHV-36A/B	[7] **26K49** Order separately
		26,200	7.7	12.60	10.95	2390	CH33-36B-2F with [6] G61MPV-36B	[7] **26K49** Order separately
		26,800	7.9	12.85	11.20	2395	CH33-42B-2F with [6] G61MPV-36B	[7] **26K49** Order separately
	Air Handlers	22,800	6.7	10.75	9.35	2440	CB29M-21/26 (Multi-Position)	Factory Installed
		22,800	6.7	10.75	9.35	2440	CB28UH-018/024 (Up-Flow/Horizontal)	Factory Installed
		24,400	7.2	11.45	10.00	2435	CB29M-31 (Multi-Position)	Factory Installed
		24,400	7.2	11.45	10.00	2435	CB28UH-030 (Up-Flow/Horizontal)	Factory Installed
		25,400	7.4	12.00	10.45	2430	CB30M-21/26 (Multi-Position)	Factory Installed
		25,400	7.4	12.00	10.45	2430	CB30U-21/26 (Up-Flow)	Factory Installed
		25,800	7.6	12.45	10.85	2380	CB30M-31 (Multi-Position)	Factory Installed
		25,800	7.6	12.45	10.85	2380	CB30U-31 (Up-Flow)	Factory Installed
		24,200	7.1	11.40	9.95	2435	[4] CVP10-26/EC10Q3 (Up-Flow)	Factory Installed
	RFCIV Metering Orifice							
	Up-Flow Indoor Coils	24,800	7.3	11.35	10.15	2445	C33-24A/B	[5] 0.063 **(42J43)**
		25,400	7.4	11.55	10.35	2450	C33-30A/B	[5] 0.063 **(42J43)**
	Down-Flow Indoor Coils	23,200	6.8	10.70	9.60	2420	CR26-18N-F	[5] 0.063 **(42J43)**
		25,400	7.4	11.60	10.35	2450	CR26-30N-F	[5] 0.063 **(42J43)**
	Horizontal Indoor Coils	24,400	7.2	11.15	10.00	2435	CH23-31	[5] 0.063 **(42J43)**
		25,200	7.4	11.45	10.30	2445	CH33-24/30A-2F	[5] 0.063 **(42J43)**
		25,600	7.5	11.70	10.45	2455	CH33-36A/B/C-2F	[5] 0.063 **(42J43)**
		25,800	7.6	11.70	10.50	2455	CH23-41	[5] 0.063 **(42J43)**

NOTE - Ratings for all C33 Indoor Coils include both cased and uncased Indoor Coils.

1 Sound Rating Number rated in accordance with test conditions included in ARI Standard 270.

2 Certified in accordance with USE certification program which is based on ARI Standard 210/240; 95°F (35°C) outdoor air temperature, 80°F (27°C) db / 67°F (19°C) wb entering evaporator air with 25 ft. (7.6 m) of connecting refrigerant lines.

3 Most popular evaporator coil.

4 Canada Only

5 RFCIV metering device is furnished with air conditioning unit for field installation in indoor unit.

6 Includes all heat sizes for this model.

7 **Factory installed RFC or expansion valve on indoor unit MUST be replaced with valve specified, order separately.**

ARI RATINGS — 2.5 TON

Outdoor Unit Model No. Unit Size [1] Sound Rating Number		[2] ARI Standard 210/240 Ratings: Cooling Capacity Btuh	Cooling Capacity kW	Efficiency SEER	Efficiency EER	Total Unit Watts	Indoor Unit Model No.	Refrigerant Metering Device
HS29-030 2.5 Ton (78 dB) 1 phase	**Expansion Valve**							
	Up-Flow Indoor Coils	29,600	8.7	10.55	9.10	3260	[3] C33-30A/B	[7] **26K34** Order separately
		29,800	8.7	10.65	9.15	3265	C33-36A/B/C	[7] **26K34** Order separately
		31,200	9.1	11.00	9.45	3300	C33-38A/B	[7] **26K34** Order separately
	Up-Flow Indoor Coils/ Furnace	29,600	8.7	11.15	9.55	3100	C33-30A/B with [6] G60UHV-36A/B	[7] **26K34** Order separately
		30,000	8.8	11.25	9.65	3105	C33-36A/B with [6] G60UHV-36A/B	[7] **26K34** Order separately
		30,200	8.9	11.10	9.50	3175	C33-30C with G61MPV-36C-090	[7] **26K34** Order separately
		30,400	8.9	11.05	9.50	3195	C33-30B with [6] G61MPV-36B	[7] **26K34** Order separately
		30,600	9.0	11.20	9.60	3185	C33-36C with G61MPV-36C-090	[7] **26K34** Order separately
		30,600	9.0	11.15	9.55	3200	C33-36B with [6] G61MPV-36B	[7] **26K34** Order separately
		31,200	9.1	11.65	9.95	3135	C33-38A/B with [6] G60UHV-36A/B	[7] **26K34** Order separately
		32,000	9.4	11.50	9.90	3235	C33-38B with [6] G61MPV-36B	[7] **26K34** Order separately
	Down-Flow Indoor Coils	29,200	8.6	10.55	9.10	3210	CR26-30N-F	**26K34** Order separately
		29,600	8.7	10.70	9.20	3220	CR26-36N/W-F	**26K34** Order separately
	Down-Flow Indoor Coils/ Furnace	30,800	9.0	11.25	9.60	3210	CR26-36W-F with [6] G61MPV-36B	**26K34** Order separately
	Horizontal Indoor Coils	28,000	8.2	10.10	8.70	3220	CH23-21	**26K34** Order separately
		28,400	8.3	10.20	8.80	3230	CH23-31	**26K34** Order separately
		29,400	8.6	10.45	9.05	3255	CH33-24/30A-2F	[7] **26K34** Order separately
		29,800	8.7	10.60	9.15	3265	CH33-36A/B/C-2F	[7] **26K34** Order separately
		29,800	8.7	10.60	9.15	3265	CH23-41	**26K34** Order separately
		30,600	9.0	10.80	9.30	3285	CH23-51	**26K34** Order separately
		30,800	9.0	10.90	9.40	3285	CH33-42B-2F	[7] **26K34** Order separately
	Horizontal Indoor Coils/ Furnace	29,400	8.6	11.10	9.50	3095	CH33-24/30A-2F w/ G60UHV-36A-070	[7] **26K34** Order separately
		30,000	8.8	11.25	9.70	3100	CH33-36A/B-2F with [6] G60UHV-36A/B	[7] **26K34** Order separately
		30,600	9.0	11.15	9.55	3200	CH33-36B-2F with [6] G61MPV-36B	[7] **26K34** Order separately
		30,800	9.0	11.25	9.65	3190	CH33-36C-2F with G61MPV-36C-090	[7] **26K34** Order separately
		31,000	9.1	11.55	9.90	3125	CH33-42B-2F with G60UHV-36B-090	[7] **26K34** Order separately
		31,600	9.3	11.40	9.80	3225	CH33-42B-2F with [6] G61MPV-36B	[7] **26K34** Order separately
	Air Handlers	28,600	8.4	10.25	8.85	3230	CB29M-31 (Multi-Position)	Factory Installed
		28,600	8.4	10.25	8.85	3230	CB28UH-030 (Up-Flow/Horizontal)	Factory Installed
		28,600	8.4	10.20	8.75	3260	CB29M-41 (Multi-Position)	Factory Installed
		28,600	8.4	10.20	8.75	3260	CB28UH-036 (Up-Flow/Horizontal)	Factory Installed
		29,000	8.5	10.55	9.00	3215	CB30M-21/26 (Multi-Position)	Factory Installed
		29,000	8.5	10.55	9.00	3215	CB30U-21/26 (Up-Flow)	Factory Installed
		30,200	8.9	11.15	9.55	3170	CB30M-31 (Multi-Position)	Factory Installed
		30,200	8.9	11.15	9.55	3170	CB30U-31 (Up-Flow)	Factory Installed
		30,200	8.9	11.00	9.40	3210	CB30M-41 (Multi-Position)	Factory Installed
		30,200	8.9	11.00	9.40	3210	CB30U-41/46 (Up-Flow)	Factory Installed
		30,400	8.9	11.35	9.70	3135	CB31MV-41 (Multi-Position)	Factory Installed
		29,400	8.6	10.50	9.00	3260	[4] CVP10-31/EC10Q3 (Up-Flow)	Factory Installed
		30,200	8.9	10.70	9.20	3275	[4] CVP10-41/EC10Q3 (Up-Flow)	Factory Installed
	RFCIV Metering Orifice							
	Up-Flow Indoor Coils	29,600	8.7	10.30	9.15	3235	C33-30A/B	[5] 0.067 **(42J45)**
		29,800	8.7	10.40	9.20	3240	C33-36A/B/C	[5] 0.067 **(42J45)**
		31,200	9.1	10.75	9.55	3275	C33-38A/B	[5] 0.067 **(42J45)**
	Down-Flow Indoor Coils	29,600	8.7	10.30	9.15	3235	CR26-30N-F	[5] 0.067 **(42J45)**
		30,200	8.9	10.50	9.30	3250	CR26-36N/W-F	[5] 0.067 **(42J45)**
	Horizontal Indoor Coils	28,400	8.3	10.00	8.85	3205	CH23-31	[5] 0.067 **(42J45)**
		29,400	8.6	10.20	9.10	3230	CH33-30A-2F	[5] 0.067 **(42J45)**
		29,800	8.7	10.40	9.20	3245	CH33-36A/B/C-2F	[5] 0.067 **(42J45)**
		29,800	8.7	10.40	9.20	3240	CH23-41	[5] 0.067 **(42J45)**

NOTE - Ratings for all C33 Indoor Coils include both cased and uncased Indoor Coils.

1 Sound Rating Number rated in accordance with test conditions included in ARI Standard 270.

2 Certified in accordance with USE certification program which is based on ARI Standard 210/240; 95°F (35°C) outdoor air temperature, 80°F (27°C) db / 67°F (19°C) wb entering evaporator air with 25 ft. (7.6 m) of connecting refrigerant lines.

3 Most popular evaporator coil.

4 Canada Only

5 RFCIV metering device is furnished with air conditioning unit for field installation in indoor unit.

6 Includes all heat sizes for this model.

7 **Factory installed RFC or expansion valve on indoor unit MUST be replaced with valve specified, order separately.**

ARI RATINGS — 3 TON (1 PHASE)

Outdoor Unit Model No. Unit Size [1] Sound Rating Number		[2] ARI Standard 210/240 Ratings: Cooling Capacity Btuh	Cooling Capacity kW	Efficiency SEER	Efficiency EER	Total Unit Watts	Indoor Unit Model No.	Refrigerant Metering Device
HS29-036 3 Ton (78 dB) 1 phase	**Expansion Valve**							
	Up-Flow Indoor Coils	35,000	10.3	10.55	9.15	3825	C33-36A/B/C	[7] **26K34** Order separately
		35,000	10.3	10.55	9.15	3825	C33-42B	[7] **26K34** Order separately
		36,400	10.7	10.90	9.45	3860	C33-44C	[7] **26K34** Order separately
		36,600	10.7	10.95	9.45	3865	C33-48B/C	[7] **26K34** Order separately
		36,800	10.8	11.00	9.50	3870	[3] C33-38A/B	[7] **26K34** Order separately
	Up-Flow Indoor Coils/ Furnace	35,200	10.3	10.95	9.45	3725	C33-36A/B with [6] G60UHV-36A/B	[7] **26K34** Order separately
		35,200	10.3	10.95	9.45	3720	C33-36B with [6] G61MPV-36B	[7] **26K34** Order separately
		35,200	10.3	10.95	9.45	3720	C33-36C with G61MPV-36C-090	[7] **26K34** Order separately
		37,000	10.8	11.40	9.85	3765	C33-38B with [6] G61MPV-36B	[7] **26K34** Order separately
		37,000	10.8	11.35	9.80	3770	C33-38A/B with [6] G60UHV-36A/B	[7] **26K34** Order separately
	Down-Flow Indoor Coils	33,600	9.8	10.60	9.15	3675	CR26-36N-F Only	**26K34** Order separately
		34,800	10.2	10.65	9.20	3780	CR26-36W-F Only	**26K34** Order separately
		35,200	10.3	10.70	9.30	3790	CR26-48N/W-F	**26K34** Order separately
	Down-Flow Indoor Coils/ Furnace	36,000	10.6	11.10	9.65	3740	CR26-36W-F with [6] G61MPV-36B	**26K34** Order separately
	Horizontal Indoor Coils	34,200	10.0	10.50	9.15	3745	CH33-36A/B/C-2F	[7] **26K34** Order separately
		35,200	10.3	10.60	9.20	3830	CH23-41	**26K34** Order separately
		37,000	10.8	11.05	9.55	3870	CH33-48C-2F	[7] **26K34** Order separately
		35,600	10.4	10.85	9.35	3800	CH23-51	**26K34** Order separately
	Horizontal Indoor Coils/ Furnace	35,000	10.3	10.90	9.40	3725	CH33-36A/B-2F with [6] G60UHV-36A/B	[7] **26K34** Order separately
		35,000	10.3	10.95	9.40	3720	CH33-36B-2F with [6] G61MPV-36B	[7] **26K34** Order separately
		35,000	10.3	10.95	9.40	3715	CH33-36C-2F with G61MPV-36C-090	[7] **26K34** Order separately
		36,600	10.7	11.60	10.00	3660	CH33-42B-2F with G60UHV-36B-090	[7] **26K34** Order separately
		36,600	10.7	11.25	9.75	3755	CH33-42B-2F with [6] G61MPV-36B	[7] **26K34** Order separately
		37,000	10.8	11.70	10.10	3670	CH33-44/48B-2F w/ G60UHV-36B-090	[7] **26K34** Order separately
		37,000	10.8	11.40	9.85	3765	CH33-44/48B-2F with [6] G61MPV-36B	[7] **26K34** Order separately
	Air Handlers	32,600	9.6	10.05	8.75	3725	CB29M-31 (Multi-Position)	Factory Installed
		32,600	9.6	10.05	8.75	3725	CB28UH-030 (Up-Flow/Horizontal)	Factory Installed
		33,600	9.8	10.15	8.75	3835	CB29M-41 (Multi-Position)	Factory Installed
		33,600	9.8	10.15	8.75	3835	CB28UH-036 (Up-Flow/Horizontal)	Factory Installed
		35,000	10.3	10.55	9.15	3835	CB29M-46 (Multi-Position)	[7] **26K34** Order separately
		35,000	10.3	10.55	9.15	3835	CB28UH-042 (Up-Flow/Horizontal)	[7] **26K34** Order separately
		35,000	10.3	10.95	9.40	3725	CB30M-31 (Multi-Position)	Factory Installed
		35,000	10.3	10.95	9.40	3725	CB30U-31 (Up-Flow)	Factory Installed
		35,400	10.4	10.85	9.35	3785	CB30M-41 (Multi-Position)	Factory Installed
		35,400	10.4	10.85	9.35	3785	CB30U-41/46 (Up-Flow)	Factory Installed
		35,400	10.4	10.85	9.40	3775	CB30M-46 (Multi-Position)	[7] **26K34** Order separately
		35,800	10.5	11.00	9.50	3775	CB31MV-41 (Multi-Position)	Factory Installed
		35,400	10.4	10.65	9.25	3835	[4] CVP10-41/EC10Q3 (Up-Flow)	Factory Installed
		35,400	10.4	10.65	9.25	3835	[4] CVP10-46/EC10Q4 (Up-Flow)	Factory Installed
	RFCIV Metering Orifice							
	Up-Flow Indoor Coils	34,800	10.2	10.50	9.10	3825	C33-36A/B/C	[5] 0.073 **(42J48)**
		34,800	10.2	10.50	9.10	3825	C33-42B	[5] 0.073 **(42J48)**
		36,600	10.7	10.95	9.45	3870	C33-38A/B	[5] 0.073 **(42J48)**
	Down-Flow Indoor Coils	35,200	10.3	10.60	9.20	3835	CR26-36N-F Only	[5] 0.073 **(42J48)**
		35,200	10.3	10.60	9.20	3835	CR26-36W-F Only	[5] 0.073 **(42J48)**
	Horizontal Indoor Coils	34,000	10.0	10.50	9.10	3745	CH33-36A/B/C-2F	[5] 0.073 **(42J48)**
		34,200	10.0	10.55	9.10	3750	CH23-41	[5] 0.073 **(42J48)**

NOTE - Ratings for all C33 Indoor Coils include both cased and uncased Indoor Coils.

1 Sound Rating Number rated in accordance with test conditions included in ARI Standard 270.

2 Certified in accordance with USE certification program which is based on ARI Standard 210/240; 95°F (35°C) outdoor air temperature, 80°F (27°C) db / 67°F (19°C) wb entering evaporator air with 25 ft. (7.6 m) of connecting refrigerant lines.

3 Most popular evaporator coil.

4 Canada Only

5 RFCIV metering device is furnished with air conditioning unit for field installation in indoor unit.

6 Includes all heat sizes for this model.

7 **Factory installed RFC or expansion valve on indoor unit MUST be replaced with valve specified, order separately.**

ARI RATINGS — 3 TON (3 PHASE)

Outdoor Unit Model No. Unit Size [1] Sound Rating Number		[2] ARI Standard 210/240 Ratings: Cooling Capacity Btuh	kW	Efficiency SEER	EER	Total Unit Watts	Indoor Unit Model No.	Refrigerant Metering Device
HS29-036 3 Ton (78 dB) 3 phase	**Expansion Valve**							
	Up-Flow Indoor Coils	34,000	10.0	10.00	9.40	3620	C33-36A/B/C	[5] **26K34** Order separately
		35,400	10.4	10.00	9.60	3685	C33-42B	[5] **26K34** Order separately
		36,200	10.6	10.00	9.80	3700	C33-38A/B	[5] **26K34** Order separately
		36,600	10.7	10.00	9.85	3725	C33-44C	[5] **26K34** Order separately
		36,800	10.8	10.00	9.85	3740	C33-48B/C	[5] **26K34** Order separately
	Down-Flow Indoor Coils	35,800	10.5	10.00	9.80	3655	CR26-36N/W-F	**26K34** Order separately
	Horizontal Indoor Coils	35,600	10.4	10.00	9.65	3695	CH33-36A/B/C-2F	[5] **26K34** Order separately
		35,600	10.4	10.00	9.65	3695	CH23-41	**26K34** Order separately
	Air Handlers	33,400	9.8	10.05	9.40	3560	CB29M-31 (Multi-Position)	Factory Installed
		33,400	9.8	10.05	9.40	3560	CB28UH-030 (Up-Flow/Horizontal)	Factory Installed
		34,000	10.0	10.05	9.25	3675	CB29M-41 (Multi-Position)	Factory Installed
		34,000	10.0	10.05	9.25	3675	CB28UH-036 (Up-Flow/Horizontal)	Factory Installed
		35,000	10.3	10.80	9.65	3625	CB30M-31 (Multi-Position)	Factory Installed
		35,000	10.3	10.80	9.65	3625	CB30U-31 (Up-Flow)	Factory Installed
		36,000	10.5	10.50	9.60	3750	CB29M-46 (Multi-Position)	[5] **26K34** Order separately
		36,000	10.5	10.50	9.60	3750	CB28UH-042 (Up-Flow/Horizontal)	[5] **26K34** Order separately
		36,400	10.7	10.30	9.50	3830	CB30M-41 (Multi-Position)	Factory Installed
		36,400	10.7	10.30	9.50	3830	CB30U-41/46 (Up-Flow)	[5] **26K34** Order separately
		36,400	10.7	10.50	10.00	3645	CB30M-46 (Multi-Position)	[5] **26K34** Order separately
		36,400	10.7	10.50	10.10	3600	CB31MV-41 (Multi-Position)	Factory Installed
		37,000	10.8	10.70	10.10	3660	CB30M-51 (Multi-Position)	[5] **26K34** Order separately
		37,000	10.8	10.70	10.10	3660	CB30U-51 (Up-Flow)	[5] **26K34** Order separately
		37,400	11.0	11.05	10.55	3535	CB31MV-51 (Multi-Position)	[5] **26K34** Order separately
		35,400	10.4	10.00	9.65	3675	[4] CVP10-41/EC10Q3 (Up-Flow)	Factory Installed
		35,400	10.4	10.00	9.65	3675	[4] CVP10-46/EC10Q4 (Up-Flow)	Factory Installed
	RFCIV Metering Orifice							
	Up-Flow Indoor Coils	34,000	10.0	10.00	9.50	3615	C33-36A/B/C	[3] 0.073 **(42J48)**
		35,200	10.3	10.00	9.55	3685	C33-42B	[3] 0.073 **(42J48)**
	Down-Flow Indoor Coils	35,600	10.4	10.00	9.75	3655	CR26-36N/W-F	[3] 0.073 **(42J48)**
	Horizontal Indoor Coils	35,400	10.4	10.00	9.60	3695	CH33-36A/B/C-2F	[3] 0.073 **(42J48)**
		35,400	10.4	10.00	9.60	3695	CH23-41	[3] 0.073 **(42J48)**

NOTE - Ratings for all C33 Indoor Coils include both cased and uncased Indoor Coils.

1 Sound Rating Number rated in accordance with test conditions included in ARI Standard 270.

2 Certified in accordance with USE certification program which is based on ARI Standard 210/240; 95°F (35°C) outdoor air temperature, 80°F (27°C) db / 67°F (19°C) wb entering evaporator air with 25 ft. (7.6 m) of connecting refrigerant lines.

3 RFCIV metering device is furnished with air conditioning unit for field installation in indoor unit.

4 Canda Only.

5 **Factory installed RFC or expansion valve on indoor unit MUST be replaced with valve specified, order separately.**

Outdoor Unit Model No. Unit Size [1] Sound Rating Number		[2] ARI Standard 210/240 Ratings Cooling Capacity Btuh	kW	Efficiency SEER	EER	Total Unit Watts	Indoor Unit Model No.	Refrigerant Metering Device
HS29-042 3.5 Ton (78 dB) 1 and 3 phase	**Expansion Valve**							
	Up-Flow Indoor Coils	38,000	11.1	10.50	9.10	4175	C33-42B	[7] **26K35** Order separately
		39,500	11.6	10.90	9.40	4210	C33-44C	[7] **26K35** Order separately
		40,000	11.7	10.95	9.50	4215	C33-48B/C	[7] **26K35** Order separately
		40,000	11.7	11.00	9.50	4220	[3] C33-50/60C	[7] **26K35** Order separately
		40,500	11.9	11.10	9.55	4235	C33-60D	[7] **26K35** Order separately
	Up-Flow Indoor Coils/ Furnace	40,000	11.7	11.35	9.75	4105	C33-44C with [6] G61MPV-60C	[7] **26K35** Order separately
		40,500	11.9	11.50	9.95	4075	C33-44C with [6] G60UHV-60C	[7] **26K35** Order separately
		40,500	11.9	11.55	9.90	4085	C33-48C with [6] G60UHV-60C	[7] **26K35** Order separately
		40,500	11.9	11.40	9.85	4110	C33-48C with [6] G61MPV-60C	[7] **26K35** Order separately
		41,000	12.0	11.60	10.00	4090	C33-50/60C with [6] G60UHV-60C	[7] **26K35** Order separately
		41,000	12.0	11.45	9.95	4120	C33-50/60C with [6] G61MPV-60C	[7] **26K35** Order separately
	Down-Flow Indoor Coils	35,600	10.4	10.50	9.05	3925	CR26-36N-F Only	**26K35** Order separately
		37,400	11.0	10.60	9.15	4085	CR26-36W-F Only	**26K35** Order separately
		39,000	11.4	10.70	9.30	4200	CR26-48N/W-F	**26K35** Order separately
		40,000	11.7	10.95	9.50	4215	CR26-60N/W-F	**26K35** Order separately
	Horizontal Indoor Coils	39,000	11.4	10.70	9.30	4195	CH23-41	**26K35** Order separately
		39,000	11.4	10.75	9.30	4195	CH23-51	**26K35** Order separately
		39,500	11.6	10.85	9.40	4210	CH33-42B-2F	[7] **26K35** Order separately
		39,500	11.6	10.85	9.40	4210	CH23-65	**26K35** Order separately
		40,500	11.9	11.05	9.55	4230	CH33-48C-2F	[7] **26K35** Order separately
		40,500	11.9	11.10	9.55	4235	CH33-60D-2F	[7] **26K35** Order separately
	Horizontal Indoor Coils/ Furnace	41,000	12.0	11.65	10.00	4095	CH33-48C-2F with [6] G60UHV-60C	[7] **26K35** Order separately
		41,000	12.0	11.50	9.95	4120	CH33-48C-2F with [6] G61MPV-60C	[7] **26K35** Order separately
		41,500	12.2	11.80	10.10	4110	CH33-50/60C-2F with [6] G60UHV-60C	[7] **26K35** Order separately
		41,500	12.2	11.60	10.05	4135	CH33-50/60C-2F with [6] G61MPV-60C	[7] **26K35** Order separately
	Air Handlers	36,400	10.7	10.05	8.75	4165	CB29M-41 (Multi-Position)	[7] **26K35** Order separately
		36,400	10.7	10.05	8.75	4165	CB28UH-036 (Up-Flow/Horizontal)	[7] **26K35** Order separately
		38,000	11.1	10.95	9.45	4030	CB30M-41 (Multi-Position)	[7] **26K35** Order separately
		38,000	11.1	10.60	9.15	4160	CB29M-46 (Multi-Position)	Factory Installed
		38,000	11.1	10.60	9.15	4160	CB28UH-042 (Up-Flow/Horizontal)	Factory Installed
		38,500	11.3	11.00	9.40	4085	CB30M-46 (Multi-Position)	Factory Installed
		38,500	11.3	11.00	9.40	4085	CB30U-41/46 (Up-Flow)	Factory Installed
		38,500	11.3	10.80	9.30	4130	CB31MV-41 (Multi-Position)	[7] **26K35** Order separately
		39,000	11.4	10.55	9.10	4290	CB29M-51 (Multi-Position)	Factory Installed
		39,000	11.4	10.55	9.10	4290	CB28UH-048 (Up-Flow/Horizontal)	Factory Installed
		41,000	12.0	11.50	9.95	4115	CB30M-51(Multi-Position)	Factory Installed
		41,000	12.0	11.50	9.95	4115	CB30U-51 (Up-Flow)	Factory Installed
		41,000	12.0	11.65	10.05	4080	CB31MV-51(Multi-Position)	Factory Installed
		38,500	11.3	10.65	9.20	4185	[4] CVP10-46/EC10Q4 (Up-Flow)	Factory Installed
		39,000	11.4	10.75	9.30	4200	[4] CVP10-51/EC10Q4 (Up-Flow)	Factory Installed
	RFCIV Metering Orifice							
	Up-Flow Indoor Coils	40,000	11.7	10.00	9.15	4375	C33-42B	[5] 0.078 **(42J51)**
		42,000	12.3	10.20	9.50	4420	C33-48B/C	[5] 0.078 **(42J51)**
	Down-Flow Indoor Coils	40,000	11.7	10.00	9.35	4280	CR26-36W-F	[5] 0.078 **(42J51)**
		41,000	12.0	10.00	9.35	4385	CR26-48N/W-F	[5] 0.078 **(42J51)**
	Horizontal Indoor Coils	40,500	11.9	10.00	9.30	4355	CH33-42B-2F	[5] 0.078 **(42J51)**
		40,500	11.9	10.00	9.30	4355	CH23-41	[5] 0.078 **(42J51)**
		41,500	12.2	10.00	9.45	4395	CH33-48C-2F	[5] 0.078 **(42J51)**
		41,500	12.2	10.00	9.45	4395	CH23-51	[5] 0.078 **(42J51)**

NOTE - Ratings for all C33 Indoor Coils include both cased and uncased Indoor Coils.

1 Sound Rating Number rated in accordance with test conditions included in ARI Standard 270.

2 Certified in accordance with USE certification program which is based on ARI Standard 210/240; 95°F (35°C) outdoor air temperature, 80°F (27°C) db / 67°F (19°C) wb entering evaporator air with 25 ft. (7.6 m) of connecting refrigerant lines.

3 Most popular evaporator coil.

4 Canada Only

5 RFCIV metering device is furnished with air conditioning unit for field installation in indoor unit.

6 Includes all heat sizes for this model.

7 **Factory installed RFC or expansion valve on indoor unit MUST be replaced with valve specified, order separately.**

Outdoor Unit Model No. Unit Size [1] Sound Rating Number		[2] ARI Standard 210/240 Ratings Cooling Capacity Btuh	kW	Efficiency SEER	EER	Total Unit Watts	Indoor Unit Model No.	Refrigerant Metering Device
HS29-048 4 Ton (80 dB) 1 phase	**Expansion Valve**							
	Up-Flow Indoor Coils	45,500	13.3	10.80	9.25	4930	C33-44C	[7] **26K35** Order separately
		47,000	13.8	10.85	9.30	5045	C33-48B/C	[7] **26K35** Order separately
		47,500	13.9	10.95	9.40	5055	C33-50/60C	[7] **26K35** Order separately
		48,000	14.1	11.00	9.45	5070	C33-60D	[7] **26K35** Order separately
		48,500	14.2	11.10	9.55	5085	[3] C33-62D	[7] **26K35** Order separately
	Up-Flow Indoor Coils/ Furnace	47,000	13.8	11.20	9.55	4925	C33-48C with [6] G61MPV-60C	[7] **26K35** Order separately
		47,500	13.9	11.25	9.60	4940	C33-50/60C with [6] G61MPV-60C	[7] **26K35** Order separately
		47,500	13.9	11.35	9.70	4900	C33-48C with [6] G60UHV-60C	[7] **26K35** Order separately
		48,000	14.1	11.45	9.75	4915	C33-50/60C with [6] G60UHV-60C	[7] **26K35** Order separately
	Down-Flow Indoor Coils	45,000	13.2	10.70	9.15	4915	CR26-48N/W-F	**26K35** Order separately
		47,000	13.8	10.90	9.30	5045	CR26-60N/W-F	**26K35** Order separately
	Horizontal Indoor Coils	47,000	13.8	10.85	9.30	5045	CH33-44/48B-2F	[7] **26K35** Order separately
		46,000	13.5	10.75	9.15	5030	CH23-51	**26K35** Order separately
		48,000	14.1	11.10	9.45	5075	CH33-50/60C-2F	[7] **26K35** Order separately
		46,500	13.6	10.80	9.25	5035	CH23-65	**26K35** Order separately
		48,000	14.1	11.05	9.45	5075	CH33-62D-2F	[7] **26K35** Order separately
		48,500	14.2	11.10	9.55	5080	CH23-68	**26K35** Order separately
	Horizontal Indoor Coils/ Furnace	48,000	14.1	11.45	9.75	4915	CH33-48C-2F with [6] G60UHV-60C	[7] **26K35** Order separately
		48,000	14.1	11.30	9.70	4945	CH33-48C-2F with [6] G61MPV-60C	[7] **26K35** Order separately
		48,500	14.2	11.55	9.85	4930	CH33-50/60C-2F with [6] G60UHV-60C	[7] **26K35** Order separately
		48,500	14.2	11.40	9.80	4960	CH33-50/60C-2F with [6] G61MPV-60C	[7] **26K35** Order separately
	Air Handlers	43,000	12.6	10.75	9.10	4735	CB30M-41 (Multi-Position)	[7] **26K35** Order separately
		43,000	12.6	10.75	9.10	4735	CB30U-41/46 (Up-Flow)	[7] **26K35** Order separately
		44,000	12.9	10.70	9.10	4835	CB31MV-41 (Multi-Position)	[7] **26K35** Order separately
		44,000	12.9	10.25	8.75	5035	CB29M-46 (Multi-Position)	Factory Installed
		44,000	12.9	10.25	8.75	5035	CB28UH-042 (Up-Flow/Horizontal)	Factory Installed
		44,000	12.9	10.85	9.20	4785	CB30M-46 (Multi-Position)	Factory Installed
		45,500	13.3	10.65	9.10	5010	CB29M-51 (Multi-Position)	Factory Installed
		45,500	13.3	10.65	9.10	5010	CB28UH-048 (Up-Flow/Horizontal)	Factory Installed
		46,500	13.6	10.65	9.15	5080	CB29M-65 (Multi-Position)	Factory Installed
		46,500	13.6	10.65	9.15	5080	CB28UH-060 (Up-Flow/Horizontal)	Factory Installed
		48,000	14.1	11.30	9.75	4935	CB30M-51 (Multi-Position)	Factory Installed
		48,000	14.1	11.30	9.75	4935	CB30U-51 (Up-Flow)	Factory Installed
		48,000	14.1	11.35	9.70	4940	CB31MV-51 (Multi-Position)	Factory Installed
		48,500	14.2	11.35	9.75	4980	CB30M-65 (Multi-Position)	Factory Installed
		48,500	14.2	11.35	9.75	4980	CB30U-65 (Up-Flow)	Factory Installed
		48,500	14.2	11.45	9.80	4955	CB31MV-65 (Multi-Position)	Factory Installed
		46,000	13.5	10.65	9.15	5020	[4] CVP10-51/EC10Q4 (Up-Flow)	Factory Installed
		47,500	13.9	10.95	9.40	5065	[4] CVP10-65/EC10Q5 (Up-Flow)	Factory Installed
	RFCIV Metering Orifice							
	Up-Flow Indoor Coils	47,500	13.9	10.70	9.30	5115	C33-48B/C	[5] 0.086 **(42J55)**
		49,000	14.4	10.95	9.55	5140	C33-60D	[5] 0.086 **(42J55)**
		49,500	14.5	11.00	9.60	5150	C33-62D	[5] 0.086 **(42J55)**
	Down-Flow Indoor Coils	46,500	13.6	10.40	9.15	5080	CR26-48N/W-F	[5] 0.086 **(42J55)**
		48,000	14.1	10.65	9.40	5120	CR26-60N/W-F	[5] 0.086 **(42J55)**
	Horizontal Indoor Coils	47,000	13.8	10.55	9.20	5095	CH23-51	[5] 0.086 **(42J55)**
		47,500	13.9	10.75	9.30	5115	CH33-44/48B-2F	[5] 0.086 **(42J55)**
		47,500	13.9	10.65	9.30	5105	CH23-65	[5] 0.086 **(42J55)**
		48,500	14.2	10.80	9.45	5135	CH33-48C-2F	[5] 0.086 **(42J55)**
		48,500	14.2	10.85	9.45	5140	CH33-60D-2F	[5] 0.086 **(42J55)**

NOTE - Ratings for all C33 Indoor Coils include both cased and uncased Indoor Coils.

1 Sound Rating Number rated in accordance with test conditions included in ARI Standard 270.

2 Certified in accordance with USE certification program which is based on ARI Standard 210/240; 95°F (35°C) outdoor air temperature, 80°F (27°C) db / 67°F (19°C) wb entering evaporator air with 25 ft. (7.6 m) of connecting refrigerant lines.

3 Most popular evaporator coil.

4 Canada Only

5 RFCIV metering device is furnished with air conditioning unit for field installation in indoor unit.

6 Includes all heat sizes for this model.

7 **Factory installed RFC or expansion valve on indoor unit MUST be replaced with valve specified, order separately.**

ARI RATINGS (3 PHASE) — 4 TON (3 PHASE)

Outdoor Unit Model No. Unit Size [1] Sound Rating Number		[2] ARI Standard 210/240 Ratings: Cooling Capacity Btuh	Cooling Capacity kW	Efficiency SEER	Efficiency EER	Total Unit Watts	Indoor Unit Model No.	Refrigerant Metering Device
HS29-048 4 Ton (80 dB) 3 phase	**Expansion Valve**							
	Up-Flow Indoor Coils	45,000	13.2	10.00	9.25	5705	C33-44C	[5] **26K35** Order separately
		46,000	13.5	10.00	9.25	4980	C33-48B/C	[5] **26K35** Order separately
		46,000	13.5	10.00	9.25	4975	C33-50/60C	[5] **26K35** Order separately
		47,000	13.8	10.00	9.35	5020	C33-60D	[5] **26K35** Order separately
		48,000	14.1	10.00	9.50	5065	C33-62D	[5] **26K35** Order separately
	Down-Flow Indoor Coils	46,000	13.5	10.00	9.25	4975	CR26-48N/W-F	**26K35** Order separately
		46,500	13.6	10.00	9.30	5010	CR26-60N/W-F	**26K35** Order separately
	Horizontal Indoor Coils	45,500	13.3	10.00	9.15	4970	CH33-44/48B-2F	[5] **26K35** Order separately
		45,500	13.3	10.00	9.15	4970	CH23-51	**26K35** Order separately
		46,000	13.5	10.00	9.20	4990	CH33-50/60C-2F	[5] **26K35** Order separately
		46,000	13.5	10.00	9.20	4990	CH23-65	**26K35** Order separately
		48,000	14.1	10.00	9.50	5065	CH33-62D-2F	[5] **26K35** Order separately
		48,000	14.1	10.00	9.50	5065	CH23-68	**26K35** Order separately
	Air Handlers	43,500	12.7	10.20	9.35	4655	CB30M-41 (Multi-Position)	[5] **26K35** Order separately
		43,500	12.7	10.25	9.35	4640	CB31MV-41 (Multi-Position)	[5] **26K35** Order separately
		45,000	13.2	10.05	9.00	5000	CB29M-51 (Multi-Position)	Factory Installed
		45,000	13.2	10.05	9.00	5000	CB28UH-048 (Up-Flow/Horizontal)	Factory Installed
		45,000	13.2	10.50	9.50	4725	CB30M-46 (Multi-Position)	Factory Installed
		45,000	13.2	10.50	9.50	4725	CB30U-41/46 (Up-Flow)	Factory Installed
		45,500	13.3	10.00	9.00	5050	CB29M-65 (Multi-Position)	Factory Installed
		45,500	13.3	10.00	9.00	5050	CB28UH-060 (Up-Flow/Horizontal)	Factory Installed
		46,000	13.5	10.50	9.45	4855	CB30M-51 (Multi-Position)	Factory Installed
		46,000	13.5	10.50	9.45	4855	CB30U-51 (Up-Flow)	Factory Installed
		46,000	13.5	10.60	9.55	4805	CB31MV-51 (Multi-Position)	Factory Installed
		46,500	13.6	10.50	9.35	4965	CB30M-65 (Multi-Position)	Factory Installed
		46,500	13.6	10.50	9.35	4965	CB30U-65 (Up-Flow)	Factory Installed
		47,000	13.8	10.70	9.60	4885	CB31MV-65 (Multi-Position)	Factory Installed
		44,500	13.0	10.00	9.05	4915	[3] CVP10-51/EC10Q4 (Up-Flow)	Factory Installed
		45,500	13.3	10.00	9.15	4965	[3] CVP10-65/EC10Q5 (Up-Flow)	Factory Installed
	RFCIV Metering Orifice							
	Up-Flow Indoor Coils	46,000	13.5	10.00	9.25	4960	C33-48B/C	[4] 0.086 **(42J55)**
		47,000	13.8	10.00	9.35	5020	C33-60D	[4] 0.086 **(42J55)**
	Down-Flow Indoor Coils	46,000	13.5	10.00	9.25	4975	CR26-48N/W-F	[4] 0.086 **(42J55)**
		46,500	13.6	10.00	9.30	5010	CR26-60N/W-F	[4] 0.086 **(42J55)**
	Horizontal Indoor Coils	45,500	13.3	10.00	9.15	4970	CH33-48C-2F	[4] 0.086 **(42J55)**
		45,500	13.3	10.00	9.15	4970	CH33-44/48B-2F	[4] 0.086 **(42J55)**
		45,500	13.3	10.00	9.15	4970	CH23-51	[4] 0.086 **(42J55)**
		46,000	13.5	10.00	9.20	4990	CH33-60D-2F	[4] 0.086 **(42J55)**
		46,000	13.5	10.00	9.20	4990	CH23-65	[4] 0.086 **(42J55)**

NOTE - Ratings for all C33 Indoor Coils include both cased and uncased Indoor Coils.

1 Sound Rating Number rated in accordance with test conditions included in ARI Standard 270.

2 Certified in accordance with USE certification program which is based on ARI Standard 210/240; 95°F (35°C) outdoor air temperature, 80°F (27°C) db / 67°F (19°C) wb entering evaporator air with 25 ft. (7.6 m) of connecting refrigerant lines.

3 Canada Only

4 RFCIV metering device is furnished with air conditioning unit for field installation in indoor unit.

5 **Factory installed RFC or expansion valve on indoor unit MUST be replaced with valve specified, order separately.**

ARI RATINGS — 5 TON (1 PHASE)

Outdoor Unit Model No. Unit Size [1] Sound Rating Number		[2] ARI Standard 210/240 Ratings: Cooling Capacity Btuh	kW	Efficiency SEER	EER	Total Unit Watts	Indoor Unit Model No.	Refrigerant Metering Device
HS29-060 5 Ton (80 dB) 1 phase	**Expansion Valve**							
	Up-Flow Indoor Coils	56,500	16.6	11.10	9.50	5935	C33-50/60C	[7] **26K35** Order separately
		58,500	17.1	11.25	9.65	6060	C33-60D	[7] **26K35** Order separately
		60,000	17.6	11.35	9.80	6135	[3] C33-62D	[7] **26K35** Order separately
	Up-Flow Indoor Coils/ Furnace	58,000	17.0	11.10	9.55	6070	C33-50/60C with [6] G60UHV-60C	[7] **26K35** Order separately
		58,000	17.0	10.95	9.45	6125	C33-50/60C with [6] G61MPV-60C	[7] **26K35** Order separately
		59,000	17.3	11.40	9.75	6040	C33-60D with G60UHV-60D-135	[7] **26K35** Order separately
		59,000	17.3	11.30	9.70	6080	C33-60D with G61MPV-60D-135	[7] **26K35** Order separately
		60,000	17.6	11.55	9.90	6060	C33-62D with G60UHV-60D-135	[7] **26K35** Order separately
		60,000	17.6	11.45	9.85	6100	C33-62D with G61MPV-60D-135	[7] **26K35** Order separately
	Down-Flow Indoor Coils	52,000	15.2	10.60	9.10	5715	CR26-48N/W-F	**26K35** Order separately
		57,000	16.7	10.95	9.40	6070	CR26-60N-F Only	**26K35** Order separately
		57,000	16.7	10.95	9.40	6070	CR26-60W-F Only	**26K35** Order separately
	Horizontal Indoor Coils	55,000	16.1	10.80	9.25	5935	CH23-51	**26K35** Order separately
		56,500	16.6	10.90	9.35	6055	CH23-65	**26K35** Order separately
		58,000	17.0	11.25	9.65	6010	CH33-50/60C-2F	[7] **26K35** Order separately
		58,500	17.1	11.15	9.60	6100	CH33-60D-2F	[7] **26K35** Order separately
		59,500	17.4	11.30	9.70	6120	CH33-62D-2F	[7] **26K35** Order separately
		59,500	17.4	11.30	9.70	6125	CH23-68	**26K35** Order separately
	Horizontal Indoor Coils/ Furnace	58,500	17.1	11.25	9.65	6065	CH33-60D-2F with G61MPV-60D-135	[7] **26K35** Order separately
		59,000	17.3	11.25	9.70	6090	CH33-50/60C-2F with [6] G60UHV-60C	[7] **26K35** Order separately
		59,000	17.3	11.10	9.60	6150	CH33-50/60C-2F with [6] G61MPV-60C	[7] **26K35** Order separately
		59,000	17.3	11.35	9.80	6025	CH33-60D-2F with G60UHV-60D-135	[7] **26K35** Order separately
		59,500	17.4	11.45	9.85	6045	CH33-62D-2F with G60UHV-60D-135	[7] **26K35** Order separately
		59,500	17.4	11.35	9.80	6085	CH33-62D-2F with G61MPV-60D-135	[7] **26K35** Order separately
	Air Handlers	54,000	15.8	10.45	9.05	5980	CB29M-51 (Multi-Position)	Factory Installed
		54,000	15.8	10.45	9.05	5980	CB28UH-048 (Up-Flow/Horizontal)	Factory Installed
		55,000	16.1	10.60	9.10	6035	CB29M-65 (Multi-Position)	Factory Installed
		55,000	16.1	10.60	9.10	6035	CB28UH-060 (Up-Flow/Horizontal)	Factory Installed
		56,000	16.4	11.35	9.75	5745	CB30M-51 (Multi-Position)	Factory Installed
		56,000	16.4	11.35	9.75	5745	CB30U-51 (Up-Flow)	Factory Installed
		56,000	16.4	11.45	9.80	5725	CB31MV-51 (Multi-Position)	Factory Installed
		58,500	17.1	11.45	9.85	5930	CB30M-65 (Multi-Position)	Factory Installed
		58,500	17.1	11.45	9.85	5930	CB30U-65 (Up-Flow)	Factory Installed
		58,500	17.1	11.50	9.90	5915	CB31MV-65 (Multi-Position)	Factory Installed
		54,500	16.0	10.75	9.25	5880	[4] CVP10-51/EC10Q4 (Up-Flow)	Factory Installed
		58,000	17.0	11.20	9.65	6005	[4] CVP10-65/EC10Q5 (Up-Flow)	Factory Installed
	RFCIV Metering Orifice							
	Up-Flow Indoor Coils	59,500	17.4	10.90	9.70	6145	C33-60D	[5] 0.098 **(42J61)**
		61,000	17.9	11.10	9.80	6210	C33-62D	[5] 0.098 **(42J61)**
	Down-Flow Indoor Coils	58,000	17.0	10.55	9.45	6145	CR26-60W-F Only	[5] 0.098 **(42J61)**
	Horizontal Indoor Coils	57,500	16.9	10.55	9.40	6130	CH23-65	[5] 0.098 **(42J61)**
		59,500	17.4	10.85	9.60	6185	CH33-60D-2F	[5] 0.098 **(42J61)**
		60,500	17.7	11.05	9.75	6195	CH33-62D-2F	[5] 0.098 **(42J61)**
		60,500	17.7	11.00	9.75	6205	CH23-68	[5] 0.098 **(42J61)**

NOTE - Ratings for all C33 Indoor Coils include both cased and uncased Indoor Coils.

1 Sound Rating Number rated in accordance with test conditions included in ARI Standard 270.

2 Certified in accordance with USE certification program which is based on ARI Standard 210/240; 95°F (35°C) outdoor air temperature, 80°F (27°C) db / 67°F (19°C) wb entering evaporator air with 25 ft. (7.6 m) of connecting refrigerant lines.

3 Most popular evaporator coil.

4 Canada Only

5 RFCIV metering device is furnished with air conditioning unit for field installation in indoor unit.

6 Includes all heat sizes for this model.

7 **Factory installed RFC or expansion valve on indoor unit MUST be replaced with valve specified, order separately.**

ARI RATINGS — 5 TON (3 PHASE)

Outdoor Unit Model No. Unit Size [1] Sound Rating Number		[2] ARI Standard 210/240 Ratings: Cooling Capacity Btuh	Cooling Capacity kW	Efficiency SEER	Efficiency EER	Total Unit Watts	Indoor Unit Model No.	Refrigerant Metering Device
HS29-060 5 Ton (84 dB) 3 phase	**Expansion Valve**							
	Up-Flow Indoor Coils	55,500	16.3	10.00	8.85	6285	C33-50/60C	[4] **26K35** Order separately
		57,500	16.8	10.00	9.20	6245	C33-60D	[4] **26K35** Order separately
		58,500	17.1	10.00	9.35	6270	C33-62D	[4] **26K35** Order separately
	Down-Flow Indoor Coils	55,500	16.3	10.00	9.30	5980	CR26-48N/W-F	**26K35** Order separately
		57,500	16.8	10.00	9.50	6060	CR26-60N/W-F	**26K35** Order separately
	Horizontal Indoor Coils	58,000	17.0	10.00	9.30	6250	CH33-60D-2F	[4] **26K35** Order separately
		58,000	17.0	10.00	9.30	6250	CH23-65	**26K35** Order separately
		58,500	17.1	10.00	9.35	6270	CH33-62D-2F	[4] **26K35** Order separately
		58,500	17.1	10.00	9.35	6270	CH23-68	**26K35** Order separately
	Air Handlers	55,000	16.1	10.05	8.65	6360	CB29M-51 (Multi-Position)	Factory Installed
		55,000	16.1	10.05	8.65	6360	CB28UH-048 (Up-Flow/Horizontal)	Factory Installed
		55,500	16.3	10.05	8.80	6315	CB29M-65 (Multi-Position)	Factory Installed
		55,500	16.3	10.05	8.80	6315	CB28UH-060 (Up-Flow/Horizontal)	Factory Installed
		56,000	16.4	10.50	9.45	5915	CB30M-51 (Multi-Position)	Factory Installed
		56,000	16.4	10.50	9.45	5915	CB30U-51 (Up-Flow)	Factory Installed
		56,000	16.4	10.60	9.55	5865	CB31MV-51 (Multi-Position)	Factory Installed
		57,500	16.8	10.50	9.30	6190	CB30M-65 (Multi-Position)	Factory Installed
		57,500	16.8	10.50	9.30	6190	CB30U-65 (Up-Flow)	Factory Installed
		57,500	16.8	10.60	9.35	6155	CB31MV-65 (Multi-Position)	Factory Installed
		54,500	16.0	10.00	9.20	5935	[3] CVP10-51/EC10Q4 (Up-Flow)	Factory Installed
		56,000	16.4	10.00	9.30	6010	[3] CVP10-65/EC10Q5 (Up-Flow)	Factory Installed
HS29-062 5 Ton + (82 dB) 3 phase	**Expansion Valve**							
	Up-Flow Indoor Coils	58,500	17.1	10.05	9.60	6085	C33-50/60C	[4] **26K35** Order separately
		60,000	17.6	10.25	9.80	6115	C33-60D	[4] **26K35** Order separately
		62,500	18.3	10.50	10.00	6255	C33-62D	[4] **26K35** Order separately
	Down-Flow Indoor Coils	55,500	16.3	10.00	9.15	6055	CR26-48N/W-F	**26K35** Order separately
		58,500	17.1	10.00	9.40	6235	CR26-60N/W-F	**26K35** Order separately
	Horizontal Indoor Coils	59,000	17.3	9.45	9.45	6245	CH33-60D-2F	[4] **26K35** Order separately
		59,000	17.3	9.45	9.45	6245	CH23-65	**26K35** Order separately
		62,500	18.3	10.75	10.05	6230	CH33-62D-2F	[4] **26K35** Order separately
		62,500	18.3	10.75	10.05	6230	CH23-68	**26K35** Order separately
	Air Handlers	58,000	17.0	11.05	10.60	5460	CB30M-51 (Multi-Position)	Factory Installed
		58,000	17.0	11.05	10.60	5460	CB30U-51 (Up-Flow)	Factory Installed
		58,000	17.0	11.10	10.70	5410	CB31MV-51 (Multi-Position)	Factory Installed
		59,000	17.3	10.05	9.85	5995	CB29M-65 (Multi-Position)	Factory Installed
		59,000	17.3	10.05	9.85	5995	CB28UH-060 (Up-Flow/Horizontal)	Factory Installed
		59,500	17.4	11.05	10.50	5665	CB30M-65 (Multi-Position)	Factory Installed
		59,500	17.4	11.05	10.50	5665	CB30U-65 (Up-Flow)	Factory Installed
		60,000	17.6	11.30	10.65	5635	CB31MV-65 (Multi-Position)	Factory Installed
		58,000	17.0	10.00	9.40	6170	[3] CVP10-65/EC10Q5	Factory Installed

NOTE - Ratings for all C33 Indoor Coils include both cased and uncased Indoor Coils.

[1] Sound Rating Number rated in accordance with test conditions included in ARI Standard 270.

[2] Certified in accordance with USE certification program which is based on ARI Standard 210/240; 95°F (35°C) outdoor air temperature, 80°F (27°C) db / 67°F (19°C) wb entering evaporator air with 25 ft. (7.6 m) of connecting refrigerant lines.

[3] Canada Only

[4] **Factory installed RFC or expansion valve on indoor unit MUST be replaced with valve specified, order separately.**

NOTE - For Temperatures and Capacities not shown in tables, see bulletin - Cooling Unit Rating Table Correction Factor Data in Miscellaneous Engineering Data section.

Entering Wet Bulb Temperature	Total Air Volume		Outdoor Air Temperature Entering Outdoor Coil																							
			85°F (29°C)						95°F (35°C)						105°F (41°C)						115°F (46°C)					
			Total Cooling Capacity		Comp Motor kW Input	Sensible To Total Ratio (S/T) Dry Bulb			Total Cooling Capacity		Comp Motor kW Input	Sensible To Total Ratio (S/T) Dry Bulb			Total Cooling Capacity		Comp Motor kW Input	Sensible To Total Ratio (S/T) Dry Bulb			Total Cooling Capacity		Comp Motor kW Input	Sensible To Total Ratio (S/T) Dry Bulb		
	cfm	L/s	kBtuh	kW		75°F 24°C	80°F 27°C	85°F 29°C	kBtuh	kW		75°F 24°C	80°F 27°C	85°F 29°C	kBtuh	kW		75°F 24°C	80°F 27°C	85°F 29°C	kBtuh	kW		75°F 24°C	80°F 27°C	85°F 29°C
HS29-012 - C33-18A COOLING CAPACITY - TXV Systems Only																										
63°F (17°C)	200	95	10.6	3.1	.77	.68	.76	.85	10.2	3.0	.85	.68	.77	.86	9.9	2.9	.94	.69	.78	.87	9.5	2.8	1.03	.69	.79	.89
	400	190	12.9	3.8	.81	.77	.90	1.00	12.5	3.7	.90	.78	.92	1.00	12.0	3.5	.98	.79	.93	1.00	11.5	3.4	1.08	.81	.96	1.00
	600	285	14.0	4.1	.84	.86	1.00	1.00	13.6	4.0	.92	.88	1.00	1.00	13.1	3.8	1.01	.89	1.00	1.00	12.6	3.7	1.10	.91	1.00	1.00
67°F (19°C)	200	95	11.0	3.2	.78	.56	.65	.73	10.7	3.1	.86	.57	.65	.74	10.3	3.0	.95	.57	.66	.75	10.0	2.9	1.04	.57	.67	.76
	400	190	13.5	4.0	.83	.62	.75	.87	13.1	3.8	.91	.63	.76	.89	12.6	3.7	1.00	.63	.77	.90	12.0	3.5	1.09	.64	.79	.92
	600	285	14.6	4.3	.85	.67	.84	.99	14.1	4.1	.93	.68	.85	1.00	13.5	4.0	1.02	.70	.87	1.00	12.9	3.8	1.11	.71	.89	1.00
71°F (22°C)	200	95	11.5	3.4	.79	.45	.54	.62	11.1	3.3	.87	.46	.55	.63	10.7	3.1	.96	.46	.55	.64	10.3	3.0	1.05	.46	.55	.64
	400	190	14.1	4.1	.84	.48	.60	.73	13.6	4.0	.92	.48	.61	.74	13.1	3.8	1.01	.49	.62	.75	12.6	3.7	1.10	.49	.63	.76
	600	285	15.2	4.5	.86	.51	.66	.82	14.7	4.3	.94	.51	.68	.84	14.1	4.1	1.03	.52	.69	.85	13.5	4.0	1.13	.52	.70	.87
HS29-012 - C33-24A/B COOLING CAPACITY - TXV Systems Only																										
63°F (17°C)	200	95	10.8	3.2	.77	.68	.76	.85	10.4	3.0	.86	.68	.77	.86	10.1	3.0	.94	.69	.78	.87	9.7	2.8	1.04	.69	.79	.89
	400	190	13.3	3.9	.82	.77	.91	1.00	12.9	3.8	.91	.78	.92	1.00	12.4	3.6	.99	.80	.94	1.00	11.9	3.5	1.09	.81	.96	1.00
	600	285	14.6	4.3	.85	.86	1.00	1.00	14.1	4.1	.93	.88	1.00	1.00	13.6	4.0	1.02	.90	1.00	1.00	13.1	3.8	1.12	.92	1.00	1.00
67°F (19°C)	200	95	11.2	3.3	.78	.56	.65	.73	10.9	3.2	.86	.56	.65	.74	10.5	3.1	.95	.57	.66	.75	10.1	3.0	1.05	.57	.67	.76
	400	190	13.9	4.1	.83	.62	.75	.87	13.4	3.9	.92	.63	.76	.89	12.9	3.8	1.00	.63	.77	.91	12.3	3.6	1.10	.64	.79	.92
	600	285	15.1	4.4	.86	.68	.84	1.00	14.5	4.2	.94	.69	.86	1.00	14.0	4.1	1.03	.71	.88	1.00	13.4	3.9	1.12	.71	.90	1.00
71°F (22°C)	200	95	11.7	3.4	.79	.45	.54	.62	11.3	3.3	.87	.45	.54	.63	10.9	3.2	.96	.46	.55	.64	10.5	3.1	1.06	.46	.55	.64
	400	190	14.5	4.2	.85	.48	.61	.73	14.0	4.1	.93	.48	.61	.74	13.4	3.9	1.02	.49	.62	.75	12.9	3.8	1.11	.49	.63	.77
	600	285	15.6	4.6	.87	.51	.67	.83	15.0	4.4	.95	.51	.68	.84	14.4	4.2	1.04	.52	.69	.86	13.8	4.0	1.14	.52	.71	.88
HS29-012 - C33-30A/B COOLING CAPACITY - TXV Systems Only																										
63°F (17°C)	200	95	10.9	3.2	.78	.67	.77	.85	10.5	3.1	.86	.68	.77	.86	10.2	3.0	.95	.69	.78	.87	9.8	2.9	1.04	.69	.79	.89
	400	190	13.5	4.0	.83	.78	.91	1.00	13.1	3.8	.91	.79	.93	1.00	12.6	3.7	1.00	.80	.95	1.00	12.0	3.5	1.09	.82	.97	1.00
	600	285	14.9	4.4	.85	.88	1.00	1.00	14.4	4.2	.94	.89	1.00	1.00	13.9	4.1	1.03	.91	1.00	1.00	13.3	3.9	1.12	.94	1.00	1.00
67°F (19°C)	200	95	11.3	3.3	.78	.56	.65	.73	11.0	3.2	.87	.56	.65	.74	10.6	3.1	.96	.57	.66	.75	10.2	3.0	1.05	.57	.67	.76
	400	190	14.1	4.1	.84	.62	.75	.88	13.6	4.0	.92	.63	.77	.90	13.1	3.8	1.01	.64	.78	.91	12.5	3.7	1.10	.65	.79	.93
	600	285	15.3	4.5	.86	.69	.86	1.00	14.8	4.3	.95	.70	.87	1.00	14.2	4.2	1.04	.71	.89	1.00	13.6	4.0	1.13	.72	.92	1.00
71°F (22°C)	200	95	11.8	3.5	.79	.45	.54	.62	11.4	3.3	.88	.45	.54	.63	11.0	3.2	.96	.45	.55	.63	10.6	3.1	1.06	.45	.55	.64
	400	190	14.7	4.3	.85	.48	.61	.73	14.2	4.2	.93	.48	.62	.74	13.6	4.0	1.02	.49	.62	.75	13.1	3.8	1.12	.49	.64	.77
	600	285	15.8	4.6	.88	.51	.68	.84	15.3	4.5	.96	.52	.69	.86	14.7	4.3	1.05	.52	.70	.88	14.0	4.1	1.14	.53	.72	.90
HS29-012 - CR26-18N-F COOLING CAPACITY - TXV Systems Only																										
63°F (17°C)	200	95	10.6	3.1	.77	.67	.76	.85	10.2	3.0	.85	.68	.77	.86	9.9	2.9	.94	.69	.78	.87	9.5	2.8	1.03	.69	.79	.89
	400	190	13.0	3.8	.82	.77	.91	1.00	12.5	3.7	.90	.78	.92	1.00	12.1	3.5	.99	.80	.94	1.00	11.6	3.4	1.08	.81	.95	1.00
	600	285	14.2	4.2	.84	.87	1.00	1.00	13.7	4.0	.92	.88	1.00	1.00	13.2	3.9	1.01	.90	1.00	1.00	12.7	3.7	1.11	.92	1.00	1.00
67°F (19°C)	200	95	11.0	3.2	.78	.56	.65	.73	10.7	3.1	.86	.56	.65	.74	10.3	3.0	.95	.57	.66	.75	10.0	2.9	1.04	.57	.67	.76
	400	190	13.6	4.0	.83	.62	.75	.87	13.1	3.8	.91	.63	.76	.89	12.6	3.7	1.00	.64	.77	.91	12.1	3.5	1.09	.64	.79	.92
	600	285	14.6	4.3	.85	.68	.85	.99	14.1	4.1	.93	.69	.86	1.00	13.5	4.0	1.02	.70	.88	1.00	13.0	3.8	1.11	.71	.90	1.00
71°F (22°C)	200	95	11.5	3.4	.79	.45	.54	.62	11.1	3.3	.87	.45	.54	.63	10.8	3.2	.96	.45	.55	.63	10.4	3.0	1.05	.46	.55	.64
	400	190	14.2	4.2	.84	.48	.61	.73	13.7	4.0	.92	.49	.61	.74	13.2	3.9	1.01	.48	.62	.75	12.6	3.7	1.11	.50	.63	.76
	600	285	15.3	4.5	.86	.51	.67	.83	14.7	4.3	.95	.52	.68	.84	14.2	4.2	1.03	.52	.69	.86	13.5	4.0	1.13	.52	.70	.88
HS29-012 - CH23-21 COOLING CAPACITY - TXV Systems Only																										
63°F (17°C)	200	95	10.2	3.0	.76	.67	.76	.84	9.9	2.9	.85	.68	.77	.85	9.6	2.8	.93	.68	.78	.86	9.2	2.7	1.02	.69	.79	.87
	400	190	12.6	3.7	.81	.75	.88	.99	12.2	3.6	.89	.76	.89	.99	11.7	3.4	.98	.78	.91	1.00	11.2	3.3	1.07	.79	.93	1.00
	600	285	13.9	4.1	.83	.83	.98	1.00	13.4	3.9	.92	.84	.99	1.00	13.0	3.8	1.01	.86	1.00	1.00	12.4	3.6	1.10	.88	1.00	1.00
67°F (19°C)	200	95	10.7	3.1	.77	.56	.65	.73	10.4	3.0	.86	.57	.66	.74	10.1	3.0	.94	.57	.66	.75	9.7	2.8	1.04	.57	.66	.76
	400	190	13.3	3.9	.82	.61	.73	.85	12.8	3.8	.90	.62	.74	.86	12.3	3.6	.99	.62	.75	.88	11.8	3.5	1.09	.63	.77	.89
	600	285	14.3	4.2	.84	.66	.81	.96	13.8	4.0	.92	.67	.82	.97	13.3	3.9	1.01	.68	.84	.99	12.7	3.7	1.11	.69	.86	1.00
71°F (22°C)	200	95	11.2	3.3	.78	.45	.54	.62	10.9	3.2	.87	.45	.54	.63	10.6	3.1	.95	.45	.55	.64	10.2	3.0	1.05	.45	.55	.64
	400	190	14.0	4.1	.84	.48	.60	.71	13.5	4.0	.92	.48	.60	.72	13.0	3.8	1.01	.49	.61	.73	12.5	3.7	1.10	.48	.62	.75
	600	285	15.1	4.4	.86	.49	.65	.79	14.5	4.2	.94	.50	.66	.81	13.9	4.1	1.03	.51	.67	.82	13.3	3.9	1.12	.51	.68	.84
HS29-012 - CH33-18A-2F COOLING CAPACITY - TXV Systems Only																										
63°F (17°C)	200	95	10.5	3.1	.77	.67	.76	.85	10.1	3.0	.85	.68	.77	.86	9.8	2.9	.94	.68	.78	.87	9.4	2.8	1.03	.69	.79	.88
	400	190	12.7	3.7	.81	.76	.89	1.00	12.3	3.6	.89	.77	.91	1.00	11.8	3.5	.98	.79	.93	1.00	11.4	3.3	1.07	.80	.94	1.00
	600	285	13.8	4.0	.83	.85	1.00	1.00	13.3	3.9	.91	.86	1.00	1.00	12.8	3.8	1.00	.88	1.00	1.00	12.4	3.6	1.10	.90	1.00	1.00
67°F (19°C)	200	95	10.9	3.2	.77	.56	.65	.73	10.6	3.1	.86	.57	.65	.74	10.2	3.0	.95	.57	.66	.75	9.9	2.9	1.04	.57	.67	.76
	400	190	13.3	3.9	.82	.62	.74	.87	12.9	3.8	.91	.62	.75	.88	12.4	3.6	.99	.63	.76	.90	11.9	3.5	1.09	.64	.78	.91
	600	285	14.3	4.2	.84	.67	.83	.98	13.8	4.0	.93	.68	.84	.99	13.3	3.9	1.01	.69	.86	1.00	12.7	3.7	1.11	.70	.88	1.00
71°F (22°C)	200	95	11.4	3.3	.79	.46	.54	.62	11.0	3.2	.87	.46	.55	.63	10.6	3.1	.96	.46	.55	.64	10.3	3.0	1.05	.46	.55	.64
	400	190	13.9	4.1	.83	.48	.60	.72	13.5	4.0	.92	.48	.61	.73	12.9	3.8	1.01	.49	.62	.74	12.4	3.6	1.10	.49	.63	.76
	600	285	15.0	4.4	.86	.50	.66	.81	14.4	4.2	.94	.51	.67	.83	13.8	4.0	1.03	.51	.68	.84	13.2	3.9	1.12	.52	.69	.86
HS29-012 - CH23-31 COOLING CAPACITY - TXV Systems Only																										
63°F (17°C)	200	95	10.2	3.0	.77	.67	.76	.84	9.9	2.9	.85	.68	.77	.85	9.6	2.8	.93	.68	.78	.86	9.3	2.7	1.02	.69	.78	.88
	400	190	12.7	3.7	.81	.76	.88	.99	12.3	3.6	.89	.77	.89	1.00	11.8	3.5	.98	.78	.91	1.00	11.3	3.3	1.07	.79	.93	1.00
	600	285	14.0	4.1	.84	.84	.99	1.00	13.6	4.0	.92	.85	1.00	1.00	13.1	3.8	1.01	.87	1.00	1.00	12.6	3.7	1.10	.89	1.00	1.00
67°F (19°C)	200	95	10.8	3.2	.77	.56	.65	.73	10.5	3.1	.86	.57	.65	.74	10.1	3.0	.95	.57	.66	.75	9.8	2.9	1.04	.57	.66	.76
	400	190	13.4	3.9	.82	.61	.74	.85	13.0	3.8	.91	.62	.74	.86	12.5	3.7	.99	.63	.76	.88	11.9	3.5	1.09	.64	.77	.90
	600	285	14.4	4.2	.85	.66	.81	.97	14.0	4.1	.93	.67	.83	.98	13.4	3.9	1.02	.68	.85	.99	12.9	3.8	1.11	.69	.87	1.00
71°F (22°C)	200	95	11.3	3.3	.78	.45	.54	.63	11.0	3.2	.87	.45	.54	.63	10.6	3.1	.95	.45	.55	.64	10.3	3.0	1.05	.44	.55	.64
	400	190	14.1	4.1	.84	.48	.60	.71	13.6	4.0	.92	.48	.60	.72	13.1	3.8	1.01	.49	.61	.74	12.6	3.7	1.10	.49	.62	.75
	600	285	15.2	4.5	.86	.50	.65	.80	14.7	4.3	.95	.50	.66	.81	14.1	4.1	1.03	.51	.67	.83	13.5	4.0	1.13	.52	.68	.85

NOTE - For Temperatures and Capacities not shown in tables, see bulletin - Cooling Unit Rating Table Correction Factor Data in Miscellaneous Engineering Data section.

Entering Wet Bulb Temperature	Total Air Volume		Outdoor Air Temperature Entering Outdoor Coil																							
			85°F (29°C)						95°F (35°C)						105°F (41°C)						115°F (46°C)					
			Total Cooling Capacity		Comp Motor kW Input	Sensible To Total Ratio (S/T) Dry Bulb			Total Cooling Capacity		Comp Motor kW Input	Sensible To Total Ratio (S/T) Dry Bulb			Total Cooling Capacity		Comp Motor kW Input	Sensible To Total Ratio (S/T) Dry Bulb			Total Cooling Capacity		Comp Motor kW Input	Sensible To Total Ratio (S/T) Dry Bulb		
	cfm	L/s	kBtuh	kW		75°F 24°C	80°F 27°C	85°F 29°C	kBtuh	kW		75°F 24°C	80°F 27°C	85°F 29°C	kBtuh	kW		75°F 24°C	80°F 27°C	85°F 29°C	kBtuh	kW		75°F 24°C	80°F 27°C	85°F 29°C
HS29-012 - CH33-36A/B/C-2F COOLING CAPACITY - TXV Systems Only																										
63°F (17°C)	200	95	11.2	3.3	.78	.67	.76	.85	10.8	3.2	.86	.67	.77	.86	10.4	3.0	.95	.68	.78	.87	10.0	2.9	1.04	.69	.79	.88
	400	190	13.6	4.0	.83	.77	.91	1.00	13.1	3.8	.91	.77	.92	1.00	12.6	3.7	1.00	.79	.94	1.00	12.1	3.5	1.09	.81	.96	1.00
	600	285	14.8	4.3	.85	.87	1.00	1.00	14.4	4.2	.94	.89	1.00	1.00	13.8	4.0	1.03	.91	1.00	1.00	13.3	3.9	1.12	.93	1.00	1.00
67°F (19°C)	200	95	11.8	3.5	.79	.55	.64	.72	11.4	3.3	.88	.56	.65	.73	11.0	3.2	.96	.56	.65	.74	10.6	3.1	1.06	.56	.66	.75
	400	190	14.3	4.2	.84	.62	.75	.87	13.8	4.0	.93	.62	.76	.89	13.2	3.9	1.01	.63	.76	.91	12.7	3.7	1.11	.63	.78	.93
	600	285	15.5	4.5	.87	.67	.85	1.00	14.9	4.4	.95	.69	.87	1.00	14.3	4.2	1.04	.70	.89	1.00	13.7	4.0	1.13	.71	.91	1.00
71°F (22°C)	200	95	12.4	3.6	.80	.45	.53	.61	12.0	3.5	.89	.45	.54	.62	11.6	3.4	.98	.45	.54	.63	11.2	3.3	1.07	.45	.54	.63
	400	190	15.1	4.4	.86	.47	.60	.72	14.6	4.3	.94	.48	.61	.72	14.0	4.1	1.03	.48	.61	.74	13.4	3.9	1.12	.49	.62	.76
	600	285	16.2	4.7	.88	.50	.67	.83	15.6	4.6	.97	.50	.68	.85	15.0	4.4	1.06	.51	.69	.87	14.4	4.2	1.15	.53	.71	.89
HS29-012 - CB29M-21/26- CB28UH-018/024 COOLING CAPACITY - TXV Systems Only																										
63°F (17°C)	300	140	12.1	3.5	.80	.71	.83	.94	11.7	3.4	.88	.72	.84	.95	11.2	3.3	.97	.73	.85	.97	10.8	3.2	1.06	.74	.87	.99
	400	190	13.0	3.8	.81	.76	.90	1.00	12.5	3.7	.90	.77	.91	1.00	12.0	3.5	.99	.78	.93	1.00	11.6	3.4	1.08	.80	.95	1.00
	500	235	13.7	4.0	.83	.81	.96	1.00	13.2	3.9	.91	.82	.98	1.00	12.7	3.7	1.00	.84	.99	1.00	12.1	3.5	1.09	.86	1.00	1.00
67°F (19°C)	300	140	12.6	3.7	.81	.58	.69	.79	12.2	3.6	.89	.58	.70	.81	11.8	3.5	.98	.59	.71	.82	11.3	3.3	1.07	.59	.72	.84
	400	190	13.6	4.0	.83	.61	.74	.87	13.1	3.8	.91	.61	.75	.88	12.6	3.7	1.00	.62	.76	.90	12.1	3.5	1.09	.63	.78	.92
	500	235	14.2	4.2	.84	.63	.79	.93	13.7	4.0	.92	.64	.80	.95	13.2	3.9	1.01	.65	.82	.97	12.6	3.7	1.10	.66	.84	.99
71°F (22°C)	300	140	13.1	3.8	.82	.45	.56	.66	12.7	3.7	.90	.45	.57	.67	12.2	3.6	.99	.45	.57	.68	11.8	3.5	1.08	.45	.58	.69
	400	190	14.2	4.2	.84	.46	.59	.72	13.7	4.0	.92	.46	.60	.73	13.2	3.9	1.01	.47	.61	.74	12.6	3.7	1.10	.47	.62	.75
	500	235	14.8	4.3	.85	.47	.62	.77	14.3	4.2	.94	.48	.63	.78	13.8	4.0	1.03	.48	.64	.80	13.2	3.9	1.12	.49	.65	.82
HS29-012 - CB30M-21/26 - CB30U-21/26 COOLING CAPACITY - TXV Systems Only																										
63°F (17°C)	350	165	13.2	3.9	.82	.73	.86	.98	12.7	3.7	.90	.74	.88	1.00	12.2	3.6	.99	.76	.89	1.00	11.7	3.4	1.08	.77	.91	1.00
	450	210	13.9	4.1	.83	.79	.94	1.00	13.4	3.9	.92	.80	.95	1.00	12.9	3.8	1.01	.81	.97	1.00	12.3	3.6	1.10	.83	.99	1.00
	550	260	14.5	4.2	.85	.84	1.00	1.00	14.1	4.1	.93	.85	1.00	1.00	13.6	4.0	1.02	.87	1.00	1.00	13.0	3.8	1.12	.89	1.00	1.00
67°F (19°C)	350	165	13.9	4.1	.83	.58	.70	.82	13.4	3.9	.92	.59	.72	.84	12.9	3.8	1.01	.60	.73	.86	12.3	3.6	1.10	.61	.74	.88
	450	210	14.7	4.3	.85	.62	.77	.91	14.2	4.2	.93	.62	.78	.92	13.6	4.0	1.02	.63	.79	.94	13.0	3.8	1.11	.63	.80	.96
	550	260	15.2	4.5	.86	.63	.81	.97	14.6	4.3	.94	.65	.83	.99	14.1	4.1	1.03	.67	.85	1.00	13.5	4.0	1.13	.68	.87	1.00
71°F (22°C)	350	165	14.6	4.3	.85	.45	.57	.68	14.1	4.1	.93	.45	.57	.69	13.6	4.0	1.02	.45	.58	.71	13.0	3.8	1.12	.46	.59	.72
	450	210	15.4	4.5	.87	.47	.61	.74	14.8	4.3	.95	.47	.61	.75	14.2	4.2	1.04	.47	.62	.76	13.6	4.0	1.13	.47	.62	.79
	550	260	15.9	4.7	.88	.47	.62	.79	15.3	4.5	.96	.48	.65	.81	14.7	4.3	1.05	.48	.66	.83	14.1	4.1	1.14	.47	.68	.85
HS29-012 - CVP10-26/EC10Q3 COOLING CAPACITY - TXV Systems Only																										
63°F (17°C)	350	165	12.6	3.7	.81	.73	.86	.98	12.1	3.5	.89	.74	.87	.99	11.6	3.4	.98	.74	.89	1.00	11.1	3.3	1.07	.76	.90	1.00
	450	210	13.2	3.9	.82	.78	.93	1.00	12.8	3.8	.90	.79	.94	1.00	12.3	3.6	.99	.80	.96	1.00	11.8	3.5	1.08	.82	.98	1.00
	550	260	13.8	4.0	.83	.83	.99	1.00	13.4	3.9	.92	.84	1.00	1.00	12.9	3.8	1.00	.86	1.00	1.00	12.4	3.6	1.10	.88	1.00	1.00
67°F (19°C)	350	165	13.4	3.9	.82	.58	.70	.82	12.9	3.8	.91	.59	.72	.84	12.4	3.6	.99	.59	.72	.85	11.9	3.5	1.09	.59	.73	.87
	450	210	14.0	4.1	.84	.60	.75	.90	13.5	4.0	.92	.61	.76	.91	13.0	3.8	1.01	.62	.78	.93	12.4	3.6	1.10	.63	.79	.95
	550	260	14.5	4.2	.85	.64	.81	.96	13.9	4.1	.93	.64	.82	.98	13.4	3.9	1.01	.65	.84	.99	12.8	3.8	1.11	.67	.86	1.00
71°F (22°C)	350	165	14.2	4.2	.84	.44	.57	.68	13.7	4.0	.92	.45	.57	.68	13.1	3.8	1.01	.45	.57	.70	12.6	3.7	1.10	.45	.58	.71
	450	210	14.8	4.3	.85	.46	.59	.73	14.3	4.2	.94	.46	.60	.74	13.7	4.0	1.02	.46	.61	.75	13.1	3.8	1.12	.47	.62	.77
	550	260	15.3	4.5	.86	.47	.62	.79	14.7	4.3	.95	.47	.63	.80	14.1	4.1	1.03	.48	.64	.81	13.5	4.0	1.13	.48	.66	.83
HS29-012 - C33-24A/B COOLING CAPACITY - RFC Systems Only																										
63°F (17°C)	200	95	10.1	3.0	.76	.68	.77	.85	9.8	2.9	.84	.68	.78	.86	9.4	2.8	.92	.69	.79	.87	9.1	2.7	1.01	.70	.79	.88
	400	190	12.5	3.7	.80	.77	.89	1.00	12.0	3.5	.88	.77	.90	1.00	11.6	3.4	.97	.78	.92	1.00	11.1	3.3	1.06	.79	.93	1.00
	600	285	13.4	3.9	.82	.82	.99	1.00	12.9	3.8	.90	.83	1.00	1.00	12.4	3.6	.99	.84	1.00	1.00	11.9	3.5	1.08	.85	1.00	1.00
67°F (19°C)	200	95	10.5	3.1	.76	.57	.65	.74	10.1	3.0	.84	.57	.66	.74	9.8	2.9	.93	.57	.66	.75	9.4	2.8	1.02	.58	.67	.76
	400	190	12.9	3.8	.81	.62	.74	.86	12.4	3.6	.89	.62	.75	.87	11.9	3.5	.98	.63	.76	.89	11.4	3.3	1.07	.64	.77	.90
	600	285	13.8	4.0	.83	.65	.81	.96	13.3	3.9	.91	.66	.82	.98	12.7	3.7	.99	.67	.82	.99	12.2	3.6	1.09	.67	.85	1.00
71°F (22°C)	200	95	10.8	3.2	.77	.46	.55	.63	10.5	3.1	.85	.46	.55	.63	10.1	3.0	.94	.46	.55	.64	9.7	2.8	1.03	.46	.56	.65
	400	190	13.1	3.8	.81	.48	.60	.72	12.7	3.7	.89	.49	.61	.73	12.2	3.6	.98	.49	.62	.74	11.6	3.4	1.07	.49	.63	.75
	600	285	14.1	4.1	.84	.50	.65	.79	13.5	4.0	.91	.51	.65	.80	12.9	3.8	1.00	.51	.66	.81	12.3	3.6	1.09	.52	.67	.83
HS29-012 - C33-30A/B COOLING CAPACITY - RFC Systems Only																										
63°F (17°C)	200	95	10.2	3.0	.76	.68	.77	.85	9.9	2.9	.84	.68	.78	.86	9.6	2.8	.93	.69	.79	.87	9.2	2.7	1.02	.70	.79	.89
	400	190	12.7	3.7	.81	.77	.90	1.00	12.3	3.6	.89	.77	.91	1.00	11.8	3.5	.97	.79	.93	1.00	11.3	3.3	1.07	.80	.95	1.00
	600	285	13.7	4.0	.83	.83	1.00	1.00	13.2	3.9	.91	.85	1.00	1.00	12.8	3.8	1.00	.86	1.00	1.00	12.2	3.6	1.08	.87	1.00	1.00
67°F (19°C)	200	95	10.6	3.1	.76	.56	.65	.74	10.3	3.0	.85	.57	.66	.74	10.0	2.9	.93	.57	.66	.75	9.6	2.8	1.02	.58	.67	.76
	400	190	13.1	3.8	.81	.62	.75	.87	12.6	3.7	.89	.63	.75	.89	12.2	3.6	.98	.64	.77	.90	11.7	3.4	1.07	.64	.78	.92
	600	285	14.0	4.1	.83	.66	.81	.99	13.6	4.0	.92	.67	.84	.99	13.1	3.8	1.00	.68	.85	1.00	12.4	3.6	1.09	.68	.86	1.00
71°F (22°C)	200	95	11.0	3.2	.77	.46	.54	.63	10.6	3.1	.86	.46	.55	.63	10.3	3.0	.94	.46	.55	.64	9.9	2.9	1.03	.46	.56	.65
	400	190	13.4	3.9	.82	.48	.61	.73	12.9	3.8	.90	.49	.62	.74	12.4	3.6	.99	.49	.63	.75	12.0	3.5	1.08	.49	.63	.76
	600	285	14.4	4.2	.84	.50	.66	.81	13.7	4.0	.92	.52	.66	.82	13.1	3.8	1.00	.52	.67	.83	12.5	3.7	1.10	.53	.68	.84
HS29-012 - CR26-30N-F COOLING CAPACITY - RFC Systems Only																										
63°F (17°C)	200	95	10.3	3.0	.76	.67	.76	.84	9.9	2.9	.84	.68	.77	.85	9.6	2.8	.93	.69	.78	.86	9.2	2.7	1.02	.69	.78	.88
	400	190	12.2	3.6	.80	.75	.88	.99	11.8	3.5	.88	.76	.90	1.00	11.3	3.3	.96	.77	.91	1.00	10.9	3.2	1.06	.78	.92	1.00
	600	285	13.3	3.9	.82	.82	.97	1.00	12.8	3.8	.90	.83	.98	1.00	12.3	3.6	.99	.84	.99	1.00	11.8	3.5	1.08	.85	1.00	1.00
67°F (19°C)	200	95	10.9	3.2	.77	.56	.64	.73	10.5	3.1	.85	.57	.65	.74	10.1	3.0	.94	.56	.66	.74	9.7	2.8	1.03	.57	.67	.75
	400	190	12.8	3.8	.81	.61	.73	.85	12.3	3.6	.89	.61	.73	.86	11.8	3.5	.97	.62	.75	.88	11.3	3.3	1.06	.62	.76	.89
	600	285	13.6	4.0	.82	.64	.81	.95	13.1	3.8	.90	.65	.82	.97	12.5	3.7	.99	.66	.83	.97	12.0	3.5	1.08	.66	.85	.99
71°F (22°C)	200	95	11.4	3.3	.78	.46	.54	.63	11.0	3.2	.86	.45	.55	.62	10.6	3.1	.95	.45	.55	.64	10.2	3.0	1.04	.47	.56	.64
	400	190	13.4	3.9	.82	.48	.59	.71	12.9	3.8	.90	.48	.60	.72	12.3	3.6	.98	.48	.60	.72	11.8	3.5	1.08	.49	.61	.74
	600	285	14.1	4.1	.84	.47	.64	.80	13.4	3.9	.91	.49	.64	.81	12.9	3.8	1.00	.50	.65	.82	12.3	3.6	1.09	.50	.66	.83

NOTE - For Temperatures and Capacities not shown in tables, see bulletin - Cooling Unit Rating Table Correction Factor Data in Miscellaneous Engineering Data section.

Entering Wet Bulb Temperature	Total Air Volume		Outdoor Air Temperature Entering Outdoor Coil																							
			85°F (29°C)						95°F (35°C)						105°F (41°C)						115°F (46°C)					
			Total Cooling Capacity		Comp Motor kW Input	Sensible To Total Ratio (S/T) Dry Bulb			Total Cooling Capacity		Comp Motor kW Input	Sensible To Total Ratio (S/T) Dry Bulb			Total Cooling Capacity		Comp Motor kW Input	Sensible To Total Ratio (S/T) Dry Bulb			Total Cooling Capacity		Comp Motor kW Input	Sensible To Total Ratio (S/T) Dry Bulb		
	cfm	L/s	kBtuh	kW		75°F 24°C	80°F 27°C	85°F 29°C	kBtuh	kW		75°F 24°C	80°F 27°C	85°F 29°C	kBtuh	kW		75°F 24°C	80°F 27°C	85°F 29°C	kBtuh	kW		75°F 24°C	80°F 27°C	85°F 29°C
HS29-012 - CH33-36A/B/C-F COOLING CAPACITY - RFC Systems Only																										
63°F (17°C)	200	95	10.5	3.1	.76	.67	.76	.84	10.2	3.0	.84	.68	.76	.85	9.8	2.9	.93	.68	.77	.86	9.5	2.8	1.02	.69	.78	.88
	400	190	12.9	3.8	.81	.76	.90	1.00	12.4	3.6	.89	.77	.91	1.00	11.9	3.5	.98	.77	.92	1.00	11.5	3.4	1.07	.78	.95	1.00
	600	285	13.9	4.1	.83	.84	1.00	1.00	13.4	3.9	.91	.85	1.00	1.00	12.8	3.8	1.00	.86	1.00	1.00	12.3	3.6	1.09	.86	1.00	1.00
67°F (19°C)	200	95	11.1	3.3	.77	.55	.64	.72	10.8	3.2	.86	.56	.65	.73	10.4	3.0	.94	.56	.66	.74	10.0	2.9	1.04	.57	.66	.75
	400	190	13.5	4.0	.82	.61	.74	.87	13.1	3.8	.90	.61	.75	.88	12.5	3.7	.99	.62	.76	.89	12.0	3.5	1.08	.63	.76	.91
	600	285	14.3	4.2	.84	.65	.82	.99	13.8	4.0	.92	.65	.83	1.00	13.2	3.9	1.01	.66	.86	1.00	12.6	3.7	1.10	.66	.86	1.00
71°F (22°C)	200	95	11.7	3.4	.78	.45	.53	.62	11.3	3.3	.87	.45	.54	.62	10.9	3.2	.96	.46	.55	.63	10.5	3.1	1.05	.45	.55	.64
	400	190	14.0	4.1	.84	.47	.60	.72	13.5	4.0	.92	.48	.61	.73	12.9	3.8	1.00	.48	.61	.74	12.3	3.6	1.09	.49	.62	.75
	600	285	14.5	4.2	.85	.50	.64	.80	13.9	4.1	.92	.50	.65	.82	13.3	3.9	1.01	.50	.65	.83	12.6	3.7	1.10	.50	.66	.84

NOTE - For Temperatures and Capacities not shown in tables, see bulletin - Cooling Unit Rating Table Correction Factor Data in Miscellaneous Engineering Data section.

Entering Wet Bulb Temperature	Total Air Volume		Outdoor Air Temperature Entering Outdoor Coil																							
			85°F (29°C)						95°F (35°C)						105°F (41°C)						115°F (46°C)					
			Total Cooling Capacity		Comp Motor kW Input	Sensible To Total Ratio (S/T) Dry Bulb			Total Cooling Capacity		Comp Motor kW Input	Sensible To Total Ratio (S/T) Dry Bulb			Total Cooling Capacity		Comp Motor kW Input	Sensible To Total Ratio (S/T) Dry Bulb			Total Cooling Capacity		Comp Motor kW Input	Sensible To Total Ratio (S/T) Dry Bulb		
	cfm	L/s	kBtuh	kW		75°F 24°C	80°F 27°C	85°F 29°C	kBtuh	kW		75°F 24°C	80°F 27°C	85°F 29°C	kBtuh	kW		75°F 24°C	80°F 27°C	85°F 29°C	kBtuh	kW		75°F 24°C	80°F 27°C	85°F 29°C
HS29-018 - C33-18A COOLING CAPACITY - TXV Systems Only																										
63°F (17°C)	500	235	17.7	5.2	1.31	.74	.87	.99	16.7	4.9	1.40	.76	.90	1.00	15.5	4.5	1.50	.79	.93	1.00	14.3	4.2	1.59	.81	.97	1.00
	600	285	18.6	5.5	1.32	.78	.92	1.00	17.4	5.1	1.42	.80	.95	1.00	16.2	4.7	1.52	.83	.99	1.00	15.0	4.4	1.61	.86	1.00	1.00
	700	330	19.2	5.6	1.33	.81	.96	1.00	18.0	5.3	1.43	.84	.99	1.00	16.8	4.9	1.53	.87	1.00	1.00	15.7	4.6	1.63	.91	1.00	1.00
67°F (19°C)	500	235	18.7	5.5	1.33	.59	.72	.83	17.7	5.2	1.43	.61	.73	.86	16.5	4.8	1.53	.62	.76	.89	15.4	4.5	1.62	.64	.78	.93
	600	285	19.6	5.7	1.34	.62	.75	.88	18.5	5.4	1.44	.63	.77	.91	17.3	5.1	1.55	.65	.80	.95	16.0	4.7	1.64	.67	.83	.99
	700	330	20.2	5.9	1.35	.64	.78	.92	19.2	5.6	1.46	.65	.81	.96	17.9	5.2	1.56	.67	.84	.99	16.6	4.9	1.66	.69	.87	1.00
71°F (22°C)	500	235	19.6	5.7	1.34	.46	.58	.69	18.6	5.5	1.45	.46	.59	.71	17.5	5.1	1.55	.47	.60	.73	16.3	4.8	1.65	.48	.62	.75
	600	285	20.6	6.0	1.35	.48	.60	.73	19.5	5.7	1.46	.47	.61	.74	18.3	5.4	1.57	.48	.63	.77	17.0	5.0	1.68	.49	.65	.80
	700	330	21.2	6.2	1.36	.49	.63	.76	20.2	5.9	1.48	.49	.64	.78	18.9	5.5	1.59	.49	.66	.81	17.6	5.2	1.69	.51	.68	.84
HS29-018 - C33-24A/B COOLING CAPACITY - TXV Systems Only																										
63°F (17°C)	500	235	18.7	5.5	1.33	.74	.86	.98	17.6	5.2	1.42	.76	.89	1.00	16.4	4.8	1.52	.78	.92	1.00	15.2	4.5	1.62	.81	.96	1.00
	600	285	19.6	5.7	1.34	.77	.91	1.00	18.4	5.4	1.44	.79	.94	1.00	17.2	5.0	1.54	.82	.98	1.00	16.0	4.7	1.64	.85	1.00	1.00
	700	330	20.2	5.9	1.35	.80	.95	1.00	19.1	5.6	1.46	.83	.99	1.00	17.9	5.2	1.56	.86	1.00	1.00	16.8	4.9	1.67	.90	1.00	1.00
67°F (19°C)	500	235	19.7	5.8	1.34	.60	.71	.83	18.6	5.5	1.45	.60	.73	.85	17.5	5.1	1.55	.62	.75	.88	16.2	4.7	1.65	.63	.78	.92
	600	285	20.6	6.0	1.35	.62	.75	.87	19.6	5.7	1.47	.63	.77	.90	18.3	5.4	1.57	.64	.79	.94	17.0	5.0	1.68	.66	.82	.98
	700	330	21.4	6.3	1.36	.64	.78	.91	20.2	5.9	1.48	.65	.80	.95	18.9	5.5	1.59	.67	.83	.99	17.6	5.2	1.69	.69	.87	1.00
71°F (22°C)	500	235	20.6	6.0	1.35	.47	.58	.69	19.6	5.7	1.47	.47	.59	.70	18.4	5.4	1.57	.47	.60	.72	17.2	5.0	1.68	.48	.62	.75
	600	285	21.6	6.3	1.37	.48	.60	.72	20.6	6.0	1.48	.48	.62	.74	19.3	5.7	1.60	.48	.63	.76	18.0	5.3	1.71	.49	.65	.79
	700	330	22.4	6.6	1.38	.49	.62	.75	21.2	6.2	1.49	.49	.64	.78	20.0	5.9	1.61	.50	.65	.81	18.7	5.5	1.72	.50	.68	.84
HS29-018 - C33-30A/B COOLING CAPACITY - TXV Systems Only																										
63°F (17°C)	500	235	19.0	5.6	1.33	.74	.87	.98	17.8	5.2	1.43	.76	.89	1.00	16.6	4.9	1.53	.78	.93	1.00	15.4	4.5	1.62	.81	.97	1.00
	600	285	19.9	5.8	1.34	.78	.92	1.00	18.7	5.5	1.45	.80	.95	1.00	17.5	5.1	1.55	.83	.98	1.00	16.2	4.7	1.65	.86	1.00	1.00
	700	330	20.6	6.0	1.36	.81	.96	1.00	19.4	5.7	1.46	.84	.99	1.00	18.2	5.3	1.57	.87	1.00	1.00	17.1	5.0	1.68	.91	1.00	1.00
67°F (19°C)	500	235	20.0	5.9	1.34	.60	.72	.83	18.9	5.5	1.45	.61	.73	.86	17.6	5.2	1.56	.62	.76	.89	16.4	4.8	1.66	.64	.78	.92
	600	285	21.0	6.2	1.36	.62	.75	.88	19.9	5.8	1.47	.63	.77	.91	18.5	5.4	1.58	.65	.80	.95	17.2	5.0	1.68	.67	.83	.98
	700	330	21.8	6.4	1.37	.64	.78	.92	20.6	6.0	1.48	.66	.81	.96	19.2	5.6	1.59	.67	.84	1.00	17.8	5.2	1.70	.70	.88	1.00
71°F (22°C)	500	235	20.8	6.1	1.36	.47	.58	.69	19.8	5.8	1.47	.47	.59	.71	18.6	5.5	1.58	.47	.60	.73	17.3	5.1	1.69	.48	.62	.75
	600	285	22.0	6.4	1.37	.48	.61	.73	20.8	6.1	1.49	.48	.62	.75	19.6	5.7	1.60	.48	.63	.77	18.2	5.3	1.71	.49	.65	.80
	700	330	22.8	6.7	1.38	.49	.63	.76	21.6	6.3	1.50	.49	.64	.78	20.4	6.0	1.62	.50	.66	.81	18.9	5.5	1.73	.51	.68	.85
HS29-018 - CR26-18N-F COOLING CAPACITY - TXV Systems Only																										
63°F (17°C)	500	235	17.6	5.2	1.31	.74	.87	.98	16.5	4.8	1.40	.76	.90	1.00	15.4	4.5	1.49	.79	.93	1.00	14.2	4.2	1.58	.82	.96	1.00
	600	285	18.4	5.4	1.32	.78	.92	1.00	17.3	5.1	1.42	.80	.95	1.00	16.1	4.7	1.51	.83	.98	1.00	14.9	4.4	1.61	.86	1.00	1.00
	700	330	19.1	5.6	1.33	.81	.96	1.00	17.9	5.2	1.43	.84	.98	1.00	16.7	4.9	1.53	.87	1.00	1.00	15.6	4.6	1.63	.91	1.00	1.00
67°F (19°C)	500	235	18.6	5.5	1.32	.60	.72	.83	17.5	5.1	1.42	.61	.74	.86	16.4	4.8	1.52	.62	.76	.89	15.2	4.5	1.62	.64	.78	.93
	600	285	19.5	5.7	1.34	.62	.75	.88	18.4	5.4	1.44	.63	.77	.91	17.1	5.0	1.54	.65	.80	.94	15.9	4.7	1.64	.67	.83	.97
	700	330	20.2	5.9	1.35	.64	.79	.92	19.0	5.6	1.45	.65	.81	.95	17.7	5.2	1.56	.67	.84	.98	16.4	4.8	1.66	.69	.88	1.00
71°F (22°C)	500	235	19.5	5.7	1.34	.46	.58	.69	18.4	5.4	1.44	.47	.59	.71	17.3	5.1	1.55	.47	.60	.73	16.1	4.7	1.65	.48	.62	.75
	600	285	20.4	6.0	1.35	.48	.60	.73	19.3	5.7	1.46	.48	.61	.75	18.1	5.3	1.57	.48	.63	.77	16.8	4.9	1.67	.49	.65	.80
	700	330	21.2	6.2	1.36	.49	.63	.76	20.0	5.9	1.47	.49	.64	.78	18.8	5.5	1.58	.50	.66	.81	17.4	5.1	1.69	.51	.68	.85
HS29-018 - CH23-21 COOLING CAPACITY - TXV Systems Only																										
63°F (17°C)	500	235	17.8	5.2	1.31	.73	.85	.96	16.9	5.0	1.41	.75	.88	.99	15.9	4.7	1.51	.77	.91	1.00	14.9	4.4	1.61	.80	.95	1.00
	600	285	18.6	5.5	1.32	.76	.89	.99	17.6	5.2	1.43	.78	.92	1.00	16.6	4.9	1.53	.81	.96	1.00	15.6	4.6	1.63	.84	.99	1.00
	700	330	19.3	5.7	1.33	.79	.93	1.00	18.3	5.4	1.44	.82	.97	1.00	17.3	5.1	1.55	.85	.99	1.00	16.4	4.8	1.65	.88	1.00	1.00
67°F (19°C)	500	235	18.9	5.5	1.33	.60	.71	.81	18.0	5.3	1.43	.61	.73	.84	17.0	5.0	1.54	.62	.75	.87	15.9	4.7	1.64	.63	.77	.90
	600	285	19.9	5.8	1.34	.61	.73	.85	18.8	5.5	1.45	.62	.76	.88	17.7	5.2	1.56	.64	.78	.92	16.6	4.9	1.66	.66	.81	.96
	700	330	20.6	6.0	1.35	.63	.76	.89	19.5	5.7	1.46	.64	.79	.93	18.3	5.4	1.57	.66	.82	.97	17.1	5.0	1.68	.68	.85	.99
71°F (22°C)	500	235	19.9	5.8	1.34	.47	.58	.68	18.9	5.5	1.45	.47	.59	.70	17.9	5.2	1.56	.47	.60	.72	16.8	4.9	1.67	.48	.61	.74
	600	285	21.0	6.2	1.36	.48	.60	.71	19.9	5.8	1.47	.48	.61	.73	18.7	5.5	1.58	.48	.62	.75	17.6	5.2	1.69	.49	.64	.78
	700	330	21.8	6.4	1.37	.49	.61	.73	20.6	6.0	1.48	.48	.63	.76	19.4	5.7	1.60	.49	.65	.79	18.2	5.3	1.71	.50	.67	.82
HS29-018 - CH23-31 COOLING CAPACITY - TXV Systems Only																										
63°F (17°C)	500	235	18.0	5.3	1.31	.74	.85	.96	17.1	5.0	1.41	.76	.88	.99	16.0	4.7	1.51	.78	.91	1.00	15.0	4.4	1.61	.80	.95	1.00
	600	285	18.8	5.5	1.33	.76	.89	1.00	17.8	5.2	1.43	.79	.93	1.00	16.7	4.9	1.53	.81	.97	1.00	15.8	4.6	1.64	.85	1.00	1.00
	700	330	19.5	5.7	1.34	.79	.93	1.00	18.5	5.4	1.44	.82	.97	1.00	17.5	5.1	1.55	.85	1.00	1.00	16.6	4.9	1.66	.89	1.00	1.00
67°F (19°C)	500	235	19.1	5.6	1.33	.60	.71	.82	18.1	5.3	1.44	.60	.73	.84	17.1	5.0	1.54	.62	.75	.87	16.0	4.7	1.64	.63	.77	.91
	600	285	20.0	5.9	1.35	.62	.74	.86	19.0	5.6	1.45	.63	.76	.89	17.9	5.2	1.56	.64	.79	.92	16.7	4.9	1.67	.66	.82	.97
	700	330	20.8	6.1	1.36	.63	.77	.89	19.7	5.8	1.47	.65	.79	.93	18.5	5.4	1.58	.66	.82	.97	17.3	5.1	1.68	.69	.86	1.00
71°F (22°C)	500	235	20.2	5.9	1.35	.47	.58	.68	19.1	5.6	1.46	.47	.59	.70	18.0	5.3	1.57	.47	.60	.72	16.9	5.0	1.67	.47	.62	.75
	600	285	21.2	6.2	1.36	.48	.59	.71	20.0	5.9	1.47	.47	.61	.73	18.9	5.5	1.59	.49	.62	.76	17.8	5.2	1.70	.49	.64	.79
	700	330	22.0	6.4	1.37	.49	.61	.74	20.8	6.1	1.49	.49	.63	.76	19.6	5.7	1.60	.50	.65	.79	18.4	5.4	1.72	.50	.67	.83
HS29-018 - CH33-24/30A-2F COOLING CAPACITY - TXV Systems Only																										
63°F (17°C)	500	235	18.9	5.5	1.33	.74	.86	.98	17.8	5.2	1.43	.76	.89	1.00	16.5	4.8	1.53	.78	.92	1.00	15.3	4.5	1.62	.81	.96	1.00
	600	285	19.8	5.8	1.34	.77	.91	1.00	18.6	5.5	1.45	.80	.94	1.00	17.3	5.1	1.55	.82	.98	1.00	16.1	4.7	1.65	.86	1.00	1.00
	700	330	20.4	6.0	1.35	.81	.96	1.00	19.3	5.7	1.46	.83	.99	1.00	18.1	5.3	1.57	.87	1.00	1.00	17.0	5.0	1.67	.91	1.00	1.00
67°F (19°C)	500	235	19.9	5.8	1.34	.59	.71	.83	18.8	5.5	1.45	.60	.73	.85	17.6	5.2	1.55	.62	.75	.88	16.4	4.8	1.66	.63	.78	.92
	600	285	20.8	6.1	1.36	.62	.75	.87	19.8	5.8	1.47	.63	.77	.90	18.5	5.4	1.58	.64	.80	.94	17.1	5.0	1.68	.66	.83	.98
	700	330	21.6	6.3	1.37	.64	.78	.92	20.4	6.0	1.48	.65	.81	.96	19.1	5.6	1.59	.67	.84	.99	17.7	5.2	1.70	.69	.87	1.00
71°F (22°C)	500	235	20.8	6.1	1.36	.47	.58	.69	19.7	5.8	1.47	.46	.59	.70	18.5	5.4	1.58	.47	.60	.72	17.3	5.1	1.68	.48	.62	.75
	600	285	21.8	6.4	1.37	.48	.60	.72	20.6	6.0	1.48	.48	.61	.74	19.5	5.7	1.60	.48	.63	.77	18.2	5.3	1.71	.49	.65	.80
	700	330	22.6	6.6	1.38	.49	.62	.76	21.4	6.3	1.50	.49	.64	.78	20.2	5.9	1.62	.49	.66	.81	18.9	5.5	1.73	.51	.68	.84

NOTE - For Temperatures and Capacities not shown in tables, see bulletin - Cooling Unit Rating Table Correction Factor Data in Miscellaneous Engineering Data section.

Entering Wet Bulb Temperature	Total Air Volume		Outdoor Air Temperature Entering Outdoor Coil																							
			85°F (29°C)						95°F (35°C)						105°F (41°C)						115°F (46°C)					
			Total Cooling Capacity		Comp Motor kW Input	Sensible To Total Ratio (S/T) Dry Bulb			Total Cooling Capacity		Comp Motor kW Input	Sensible To Total Ratio (S/T) Dry Bulb			Total Cooling Capacity		Comp Motor kW Input	Sensible To Total Ratio (S/T) Dry Bulb			Total Cooling Capacity		Comp Motor kW Input	Sensible To Total Ratio (S/T) Dry Bulb		
	cfm	L/s	kBtuh	kW		75°F 24°C	80°F 27°C	85°F 29°C	kBtuh	kW		75°F 24°C	80°F 27°C	85°F 29°C	kBtuh	kW		75°F 24°C	80°F 27°C	85°F 29°C	kBtuh	kW		75°F 24°C	80°F 27°C	85°F 29°C
HS29-018 - CH33-36A/B/C-2F COOLING CAPACITY - TXV Systems Only																										
63°F (17°C)	500	235	19.1	5.6	1.33	.73	.86	.98	17.9	5.2	1.43	.75	.88	1.00	16.6	4.9	1.53	.77	.92	1.00	15.4	4.5	1.62	.80	.96	1.00
	600	285	20.0	5.9	1.34	.77	.90	1.00	18.7	5.5	1.45	.79	.94	1.00	17.4	5.1	1.55	.82	.98	1.00	16.1	4.7	1.65	.85	1.00	1.00
	700	330	20.6	6.0	1.35	.80	.95	1.00	19.4	5.7	1.46	.83	.99	1.00	18.1	5.3	1.57	.86	1.00	1.00	17.0	5.0	1.67	.90	1.00	1.00
67°F (19°C)	500	235	20.4	6.0	1.35	.59	.71	.82	19.2	5.6	1.46	.60	.72	.84	17.9	5.2	1.56	.61	.74	.87	16.6	4.9	1.66	.63	.77	.91
	600	285	21.2	6.2	1.36	.61	.74	.87	20.0	5.9	1.47	.62	.76	.90	18.7	5.5	1.58	.64	.79	.93	17.3	5.1	1.69	.66	.82	.98
	700	330	22.0	6.4	1.37	.63	.78	.91	20.8	6.1	1.49	.64	.80	.95	19.3	5.7	1.60	.66	.83	.99	17.9	5.2	1.70	.68	.87	1.00
71°F (22°C)	500	235	21.6	6.3	1.37	.46	.57	.68	20.4	6.0	1.48	.46	.58	.69	19.1	5.6	1.59	.46	.59	.71	17.8	5.2	1.70	.47	.61	.74
	600	285	22.6	6.6	1.38	.48	.59	.72	21.4	6.3	1.49	.47	.61	.73	20.0	5.9	1.61	.48	.62	.76	18.6	5.5	1.72	.48	.64	.79
	700	330	23.2	6.8	1.39	.48	.61	.75	22.0	6.4	1.51	.49	.63	.77	20.6	6.0	1.62	.49	.65	.80	19.2	5.6	1.74	.50	.67	.83
HS29-018 - CB29M-21/26 - CB28UH-018/024 COOLING CAPACITY - TXV Systems Only																										
63°F (17°C)	400	190	16.8	4.9	1.29	.71	.81	.91	16.0	4.7	1.39	.72	.84	.94	15.1	4.4	1.48	.74	.86	.98	14.1	4.1	1.58	.76	.89	1.00
	600	285	18.8	5.5	1.33	.76	.89	1.00	17.8	5.2	1.43	.79	.93	1.00	16.7	4.9	1.53	.81	.97	1.00	15.8	4.6	1.64	.85	1.00	1.00
	800	380	20.2	5.9	1.35	.82	.97	1.00	19.2	5.6	1.46	.85	.99	1.00	18.2	5.3	1.57	.89	1.00	1.00	17.2	5.0	1.68	.93	1.00	1.00
67°F (19°C)	400	190	17.8	5.2	1.31	.58	.68	.78	17.0	5.0	1.41	.58	.70	.80	16.0	4.7	1.51	.60	.71	.82	15.0	4.4	1.61	.61	.73	.85
	600	285	20.0	5.9	1.35	.62	.74	.86	19.0	5.6	1.45	.63	.76	.89	17.9	5.2	1.56	.64	.79	.92	16.7	4.9	1.67	.66	.82	.97
	800	380	21.4	6.3	1.36	.64	.79	.93	20.2	5.9	1.48	.66	.82	.97	18.9	5.5	1.59	.68	.86	1.00	17.7	5.2	1.70	.71	.90	1.00
71°F (22°C)	400	190	18.7	5.5	1.33	.44	.56	.66	17.8	5.2	1.43	.46	.56	.67	16.9	5.0	1.53	.45	.58	.68	15.8	4.6	1.64	.47	.59	.70
	600	285	21.2	6.2	1.36	.48	.59	.71	20.0	5.9	1.47	.47	.61	.73	18.9	5.5	1.59	.49	.62	.76	17.7	5.2	1.70	.49	.64	.79
	800	380	22.6	6.6	1.38	.49	.63	.77	21.4	6.3	1.50	.50	.65	.79	20.2	5.9	1.61	.50	.67	.83	18.9	5.5	1.73	.52	.69	.87
HS29-018 - CB30M-21/26 - CB30U-21/26 COOLING CAPACITY - TXV Systems Only																										
63°F (17°C)	400	190	16.9	5.0	1.29	.71	.81	.91	16.0	4.7	1.39	.72	.84	.94	15.1	4.4	1.48	.74	.86	.98	14.1	4.1	1.58	.76	.89	1.00
	600	285	18.8	5.5	1.33	.76	.89	1.00	17.8	5.2	1.43	.79	.93	1.00	16.7	4.9	1.53	.81	.97	1.00	15.8	4.6	1.64	.85	1.00	1.00
	800	380	20.2	5.9	1.35	.82	.97	1.00	19.2	5.6	1.46	.85	.99	1.00	18.2	5.3	1.57	.88	1.00	1.00	17.2	5.0	1.68	.93	1.00	1.00
67°F (19°C)	400	190	17.8	5.2	1.31	.58	.68	.78	17.0	5.0	1.41	.58	.70	.80	16.0	4.7	1.51	.60	.71	.82	15.0	4.4	1.61	.61	.73	.85
	600	285	20.0	5.9	1.35	.62	.74	.86	19.0	5.6	1.45	.63	.76	.89	17.9	5.2	1.56	.64	.78	.92	16.7	4.9	1.67	.66	.82	.97
	800	380	21.4	6.3	1.36	.64	.79	.93	20.2	5.9	1.48	.66	.82	.97	18.9	5.5	1.59	.68	.86	1.00	17.7	5.2	1.70	.71	.90	1.00
71°F (22°C)	400	190	18.7	5.5	1.33	.44	.56	.66	17.8	5.2	1.43	.46	.56	.67	16.9	5.0	1.53	.46	.58	.68	15.9	4.7	1.64	.47	.59	.71
	600	285	21.2	6.2	1.36	.48	.59	.71	20.0	5.9	1.47	.47	.61	.73	18.9	5.5	1.59	.48	.62	.76	17.7	5.2	1.70	.49	.64	.79
	800	380	22.6	6.6	1.38	.49	.63	.76	21.4	6.3	1.50	.50	.65	.79	20.2	5.9	1.61	.50	.67	.83	18.9	5.5	1.73	.52	.69	.86
HS29-018 - CVP10-26/EC10Q3 COOLING CAPACITY - TXV Systems Only																										
63°F (17°C)	500	235	18.0	5.3	1.31	.74	.85	.96	17.1	5.0	1.41	.76	.88	.99	16.0	4.7	1.51	.78	.91	1.00	15.0	4.4	1.61	.80	.95	1.00
	600	285	18.8	5.5	1.33	.76	.89	1.00	17.8	5.2	1.43	.79	.93	1.00	16.7	4.9	1.53	.81	.97	1.00	15.8	4.6	1.64	.85	1.00	1.00
	700	330	19.5	5.7	1.34	.79	.93	1.00	18.5	5.4	1.44	.82	.97	1.00	17.5	5.1	1.55	.85	1.00	1.00	16.6	4.9	1.66	.89	1.00	1.00
67°F (19°C)	500	235	19.1	5.6	1.33	.60	.71	.82	18.1	5.3	1.44	.60	.73	.84	17.1	5.0	1.54	.62	.75	.87	16.0	4.7	1.64	.63	.77	.91
	600	285	20.0	5.9	1.35	.62	.74	.86	19.0	5.6	1.45	.63	.76	.89	17.9	5.2	1.56	.64	.79	.92	16.7	4.9	1.67	.66	.82	.97
	700	330	20.8	6.1	1.36	.63	.77	.89	19.7	5.8	1.47	.65	.79	.93	18.5	5.4	1.58	.66	.82	.97	17.3	5.1	1.68	.69	.86	1.00
71°F (22°C)	500	235	20.2	5.9	1.35	.47	.58	.68	19.1	5.6	1.46	.47	.59	.70	18.0	5.3	1.57	.47	.60	.72	16.9	5.0	1.67	.47	.62	.75
	600	285	21.2	6.2	1.36	.48	.59	.71	20.0	5.9	1.47	.47	.61	.73	18.9	5.5	1.59	.49	.62	.76	17.8	5.2	1.70	.49	.64	.79
	700	330	22.0	6.4	1.37	.49	.61	.74	20.8	6.1	1.49	.49	.63	.76	19.6	5.7	1.60	.50	.65	.79	18.4	5.4	1.72	.50	.67	.83
HS29-018 - C33-18A COOLING CAPACITY - RFC Systems Only																										
63°F (17°C)	500	235	18.0	5.3	1.30	.74	.86	.98	16.9	5.0	1.40	.76	.89	1.00	15.7	4.6	1.50	.78	.93	1.00	14.6	4.3	1.59	.81	.97	1.00
	600	285	18.7	5.5	1.32	.77	.91	1.00	17.7	5.2	1.42	.80	.95	1.00	16.4	4.8	1.52	.82	.98	1.00	15.2	4.5	1.61	.86	1.00	1.00
	700	330	19.3	5.7	1.33	.81	.95	1.00	18.2	5.3	1.43	.83	.99	1.00	17.0	5.0	1.53	.86	1.00	1.00	16.0	4.7	1.64	.90	1.00	1.00
67°F (19°C)	500	235	18.9	5.5	1.32	.60	.72	.83	17.9	5.2	1.43	.60	.73	.85	16.8	4.9	1.53	.62	.75	.89	15.6	4.6	1.62	.64	.78	.92
	600	285	19.8	5.8	1.33	.62	.75	.87	18.7	5.5	1.44	.63	.77	.90	17.5	5.1	1.55	.64	.80	.94	16.3	4.8	1.65	.66	.83	.98
	700	330	20.4	6.0	1.34	.64	.78	.91	19.3	5.7	1.45	.65	.80	.95	18.1	5.3	1.56	.67	.84	.99	16.8	4.9	1.66	.69	.87	1.00
71°F (22°C)	500	235	19.8	5.8	1.33	.47	.58	.69	18.8	5.5	1.44	.47	.59	.71	17.7	5.2	1.55	.47	.60	.73	16.5	4.8	1.66	.48	.62	.75
	600	285	20.6	6.0	1.34	.48	.60	.72	19.6	5.7	1.46	.48	.61	.74	18.6	5.5	1.57	.48	.63	.77	17.3	5.1	1.68	.49	.65	.80
	700	330	21.4	6.3	1.35	.49	.62	.75	20.4	6.0	1.47	.49	.64	.78	19.2	5.6	1.58	.50	.65	.80	17.9	5.2	1.70	.51	.68	.84
HS29-018 - C33-24A/B COOLING CAPACITY - RFC Systems Only																										
63°F (17°C)	500	235	18.9	5.5	1.32	.74	.86	.97	17.8	5.2	1.42	.76	.89	1.00	16.6	4.9	1.52	.78	.92	1.00	15.4	4.5	1.62	.81	.96	1.00
	600	285	19.8	5.8	1.33	.77	.90	1.00	18.7	5.5	1.44	.79	.94	1.00	17.4	5.1	1.54	.82	.97	1.00	16.2	4.7	1.64	.85	1.00	1.00
	700	330	20.6	6.0	1.34	.80	.94	1.00	19.4	5.7	1.45	.83	.98	1.00	18.1	5.3	1.56	.86	1.00	1.00	17.0	5.0	1.67	.90	1.00	1.00
67°F (19°C)	500	235	19.9	5.8	1.33	.60	.71	.82	18.9	5.5	1.44	.60	.73	.85	17.7	5.2	1.55	.62	.75	.88	16.5	4.8	1.65	.63	.78	.91
	600	285	20.8	6.1	1.35	.62	.74	.87	19.7	5.8	1.46	.63	.77	.90	18.6	5.5	1.57	.64	.79	.93	17.2	5.0	1.68	.66	.82	.97
	700	330	21.4	6.3	1.35	.63	.77	.90	20.4	6.0	1.47	.65	.80	.94	19.2	5.6	1.59	.67	.83	.98	17.8	5.2	1.69	.69	.87	1.00
71°F (22°C)	500	235	20.8	6.1	1.35	.47	.58	.69	19.8	5.8	1.46	.47	.59	.70	18.7	5.5	1.57	.47	.60	.72	17.4	5.1	1.68	.48	.62	.75
	600	285	21.6	6.3	1.36	.48	.60	.72	20.6	6.0	1.47	.48	.61	.74	19.6	5.7	1.59	.48	.63	.76	18.3	5.4	1.71	.49	.64	.79
	700	330	22.4	6.6	1.37	.49	.62	.75	21.4	6.3	1.49	.49	.64	.77	20.2	5.9	1.61	.50	.65	.80	18.9	5.5	1.72	.50	.67	.84
HS29-018 - C33-30A/B COOLING CAPACITY - RFC Systems Only																										
63°F (17°C)	500	235	19.2	5.6	1.32	.74	.86	.98	18.1	5.3	1.43	.76	.89	1.00	16.9	5.0	1.53	.78	.92	1.00	15.6	4.6	1.63	.81	.96	1.00
	600	285	20.2	5.9	1.34	.78	.91	1.00	19.0	5.6	1.45	.80	.95	1.00	17.7	5.2	1.55	.83	.98	1.00	16.5	4.8	1.65	.86	1.00	1.00
	700	330	21.0	6.2	1.35	.81	.95	1.00	19.7	5.8	1.46	.84	.99	1.00	18.5	5.4	1.57	.87	1.00	1.00	17.3	5.1	1.68	.91	1.00	1.00
67°F (19°C)	500	235	20.2	5.9	1.34	.60	.72	.83	19.1	5.6	1.45	.61	.73	.85	17.9	5.2	1.56	.62	.75	.88	16.7	4.9	1.66	.63	.78	.92
	600	285	21.2	6.2	1.35	.62	.75	.87	20.0	5.9	1.46	.63	.77	.90	18.8	5.5	1.58	.65	.80	.94	17.5	5.1	1.68	.66	.83	.98
	700	330	21.8	6.4	1.36	.64	.78	.91	20.8	6.1	1.48	.66	.81	.95	19.5	5.7	1.59	.67	.84	.99	18.1	5.3	1.70	.69	.88	1.00
71°F (22°C)	500	235	21.0	6.2	1.35	.47	.58	.69	20.0	5.9	1.46	.47	.59	.71	18.9	5.5	1.58	.47	.60	.73	17.6	5.2	1.69	.48	.62	.75
	600	285	22.0	6.4	1.36	.48	.60	.72	21.0	6.2	1.48	.48	.62	.74	19.8	5.8	1.60	.49	.63	.77	18.5	5.4	1.71	.49	.65	.80
	700	330	22.8	6.7	1.37	.49	.62	.76	21.8	6.4	1.49	.49	.64	.78	20.6	6.0	1.61	.50	.66	.81	19.2	5.6	1.73	.51	.68	.84

NOTE - For Temperatures and Capacities not shown in tables, see bulletin - Cooling Unit Rating Table Correction Factor Data in Miscellaneous Engineering Data section.

Entering Wet Bulb Temperature	Total Air Volume		Outdoor Air Temperature Entering Outdoor Coil																							
			85°F (29°C)						95°F (35°C)						105°F (41°C)						115°F (46°C)					
			Total Cooling Capacity		Comp Motor kW Input	Sensible To Total Ratio (S/T) Dry Bulb			Total Cooling Capacity		Comp Motor kW Input	Sensible To Total Ratio (S/T) Dry Bulb			Total Cooling Capacity		Comp Motor kW Input	Sensible To Total Ratio (S/T) Dry Bulb			Total Cooling Capacity		Comp Motor kW Input	Sensible To Total Ratio (S/T) Dry Bulb		
	cfm	L/s	kBtuh	kW		75°F 24°C	80°F 27°C	85°F 29°C	kBtuh	kW		75°F 24°C	80°F 27°C	85°F 29°C	kBtuh	kW		75°F 24°C	80°F 27°C	85°F 29°C	kBtuh	kW		75°F 24°C	80°F 27°C	85°F 29°C
HS29-018 - CR26-18N-F COOLING CAPACITY - RFC Systems Only																										
63°F (17°C)	500	235	17.8	5.2	1.30	.74	.87	.98	16.7	4.9	1.40	.76	.90	1.00	15.6	4.6	1.49	.79	.93	1.00	14.5	4.2	1.59	.81	.96	1.00
	600	285	18.7	5.5	1.32	.78	.91	1.00	17.5	5.1	1.42	.80	.94	1.00	16.3	4.8	1.51	.83	.97	1.00	15.1	4.4	1.61	.86	.99	1.00
	700	330	19.3	5.7	1.33	.81	.95	1.00	18.2	5.3	1.43	.84	.98	1.00	16.9	5.0	1.53	.87	1.00	1.00	15.9	4.7	1.63	.90	1.00	1.00
67°F (19°C)	500	235	18.8	5.5	1.32	.60	.72	.83	17.7	5.2	1.42	.61	.73	.86	16.6	4.9	1.52	.62	.76	.89	15.4	4.5	1.62	.64	.78	.92
	600	285	19.7	5.8	1.33	.62	.75	.88	18.6	5.5	1.44	.63	.77	.91	17.4	5.1	1.54	.65	.80	.94	16.1	4.7	1.64	.66	.83	.97
	700	330	20.4	6.0	1.34	.64	.78	.92	19.2	5.6	1.45	.65	.81	.95	18.0	5.3	1.56	.67	.84	.98	16.7	4.9	1.66	.69	.87	1.00
71°F (22°C)	500	235	19.7	5.8	1.33	.47	.58	.69	18.7	5.5	1.44	.47	.59	.71	17.6	5.2	1.55	.47	.60	.73	16.4	4.8	1.65	.48	.62	.75
	600	285	20.6	6.0	1.34	.48	.61	.72	19.6	5.7	1.46	.48	.62	.75	18.4	5.4	1.57	.48	.63	.77	17.1	5.0	1.67	.49	.65	.80
	700	330	21.4	6.3	1.35	.49	.63	.76	20.2	5.9	1.47	.49	.64	.78	19.0	5.6	1.58	.50	.66	.81	17.7	5.2	1.69	.51	.68	.84
HS29-018 - CH23-21 COOLING CAPACITY - RFC Systems Only																										
63°F (17°C)	500	235	17.9	5.2	1.30	.73	.85	.96	17.0	5.0	1.41	.75	.87	.99	16.0	4.7	1.51	.77	.91	1.00	15.0	4.4	1.60	.80	.94	1.00
	600	285	18.7	5.5	1.32	.76	.88	.99	17.8	5.2	1.42	.78	.92	1.00	16.7	4.9	1.52	.81	.96	1.00	15.7	4.6	1.63	.84	.99	1.00
	700	330	19.5	5.7	1.33	.78	.92	1.00	18.4	5.4	1.43	.81	.96	1.00	17.4	5.1	1.54	.84	.99	1.00	16.5	4.8	1.65	.88	1.00	1.00
67°F (19°C)	500	235	19.1	5.6	1.32	.60	.71	.81	18.1	5.3	1.43	.60	.72	.83	17.1	5.0	1.54	.62	.74	.87	16.0	4.7	1.64	.63	.77	.90
	600	285	20.0	5.9	1.34	.61	.73	.85	19.0	5.6	1.45	.62	.75	.88	17.9	5.2	1.55	.64	.78	.91	16.7	4.9	1.66	.66	.81	.96
	700	330	20.8	6.1	1.35	.62	.76	.88	19.6	5.7	1.46	.64	.78	.92	18.5	5.4	1.57	.66	.81	.96	17.3	5.1	1.68	.68	.85	.99
71°F (22°C)	500	235	20.2	5.9	1.34	.47	.58	.68	19.1	5.6	1.45	.46	.59	.70	18.0	5.3	1.56	.47	.60	.72	17.0	5.0	1.67	.47	.61	.74
	600	285	21.2	6.2	1.35	.47	.59	.71	20.0	5.9	1.47	.48	.61	.73	18.9	5.5	1.58	.49	.62	.75	17.8	5.2	1.69	.49	.64	.78
	700	330	21.8	6.4	1.36	.48	.61	.73	20.8	6.1	1.48	.49	.63	.75	19.6	5.7	1.59	.49	.64	.78	18.4	5.4	1.71	.51	.66	.82
HS29-018 - CH23-31 COOLING CAPACITY - RFC Systems Only																										
63°F (17°C)	500	235	18.1	5.3	1.31	.73	.85	.96	17.2	5.0	1.41	.75	.88	.99	16.2	4.7	1.51	.78	.91	1.00	15.1	4.4	1.61	.80	.95	1.00
	600	285	19.0	5.6	1.32	.76	.89	.99	18.0	5.3	1.43	.78	.92	1.00	16.9	5.0	1.53	.81	.96	1.00	15.9	4.7	1.63	.85	.99	1.00
	700	330	19.7	5.8	1.33	.79	.92	1.00	18.6	5.5	1.44	.81	.96	1.00	17.7	5.2	1.55	.85	.99	1.00	16.7	4.9	1.66	.89	1.00	1.00
67°F (19°C)	500	235	19.3	5.7	1.33	.59	.71	.81	18.3	5.4	1.43	.61	.72	.84	17.2	5.0	1.54	.62	.75	.87	16.2	4.7	1.64	.63	.77	.91
	600	285	20.2	5.9	1.34	.61	.73	.85	19.2	5.6	1.45	.63	.76	.88	18.0	5.3	1.56	.64	.78	.92	16.9	5.0	1.67	.66	.81	.96
	700	330	21.0	6.2	1.35	.63	.76	.89	19.8	5.8	1.46	.65	.79	.92	18.7	5.5	1.57	.66	.82	.97	17.4	5.1	1.68	.68	.85	.99
71°F (22°C)	500	235	20.2	5.9	1.34	.47	.58	.68	19.3	5.7	1.45	.46	.59	.70	18.2	5.3	1.56	.47	.60	.72	17.1	5.0	1.67	.47	.62	.74
	600	285	21.4	6.3	1.35	.47	.60	.71	20.2	5.9	1.47	.48	.61	.73	19.1	5.6	1.58	.48	.63	.75	17.9	5.2	1.70	.49	.64	.78
	700	330	22.0	6.4	1.36	.48	.61	.73	21.0	6.2	1.48	.49	.62	.76	19.8	5.8	1.60	.49	.65	.79	18.5	5.4	1.71	.51	.67	.82
HS29-018 - CH33-24/30A-2F COOLING CAPACITY - RFC Systems Only																										
63°F (17°C)	500	235	19.1	5.6	1.32	.74	.86	.98	18.0	5.3	1.43	.76	.89	1.00	16.8	4.9	1.53	.78	.92	1.00	15.5	4.5	1.62	.81	.96	1.00
	600	285	20.0	5.9	1.34	.77	.91	1.00	18.9	5.5	1.44	.79	.94	1.00	17.6	5.2	1.55	.82	.98	1.00	16.4	4.8	1.65	.86	1.00	1.00
	700	330	20.8	6.1	1.35	.80	.95	1.00	19.5	5.7	1.46	.83	.98	1.00	18.3	5.4	1.57	.86	1.00	1.00	17.2	5.0	1.68	.90	1.00	1.00
67°F (19°C)	500	235	20.0	5.9	1.34	.60	.71	.82	19.0	5.6	1.45	.60	.73	.85	17.9	5.2	1.55	.62	.75	.88	16.6	4.9	1.66	.63	.78	.92
	600	285	21.0	6.2	1.35	.62	.75	.87	19.9	5.8	1.46	.63	.77	.90	18.8	5.5	1.57	.64	.79	.94	17.4	5.1	1.68	.66	.82	.98
	700	330	21.6	6.3	1.36	.64	.78	.91	20.6	6.0	1.47	.65	.80	.95	19.4	5.7	1.59	.67	.83	.98	18.0	5.3	1.70	.69	.87	1.00
71°F (22°C)	500	235	21.0	6.2	1.35	.47	.58	.69	19.9	5.8	1.46	.47	.59	.70	18.8	5.5	1.58	.47	.60	.72	17.6	5.2	1.69	.48	.62	.75
	600	285	21.8	6.4	1.36	.48	.60	.72	20.8	6.1	1.48	.48	.61	.74	19.7	5.8	1.60	.48	.63	.76	18.4	5.4	1.71	.49	.65	.79
	700	330	22.6	6.6	1.37	.49	.62	.75	21.6	6.3	1.49	.49	.64	.78	20.4	6.0	1.61	.50	.65	.80	19.1	5.6	1.73	.50	.68	.84
HS29-018 - CH33-36A/B/C-2F COOLING CAPACITY - RFC Systems Only																										
63°F (17°C)	500	235	19.3	5.7	1.33	.73	.85	.97	18.2	5.3	1.43	.75	.88	1.00	16.9	5.0	1.53	.77	.91	1.00	15.6	4.6	1.62	.80	.95	1.00
	600	285	20.2	5.9	1.34	.76	.90	1.00	19.0	5.6	1.45	.79	.93	1.00	17.7	5.2	1.55	.81	.97	1.00	16.3	4.8	1.65	.85	1.00	1.00
	700	330	21.0	6.2	1.35	.80	.95	1.00	19.6	5.7	1.46	.82	.98	1.00	18.4	5.4	1.57	.86	1.00	1.00	17.2	5.0	1.68	.90	1.00	1.00
67°F (19°C)	500	235	20.6	6.0	1.34	.59	.71	.82	19.4	5.7	1.45	.60	.72	.84	18.2	5.3	1.56	.61	.74	.87	16.8	4.9	1.67	.62	.77	.91
	600	285	21.4	6.3	1.36	.61	.74	.86	20.4	6.0	1.47	.62	.76	.89	19.0	5.6	1.58	.63	.78	.93	17.6	5.2	1.69	.65	.82	.97
	700	330	22.2	6.5	1.36	.63	.77	.91	21.0	6.2	1.48	.65	.80	.94	19.6	5.7	1.59	.66	.83	.98	18.1	5.3	1.70	.68	.86	1.00
71°F (22°C)	500	235	21.8	6.4	1.36	.47	.57	.68	20.6	6.0	1.48	.47	.58	.70	19.4	5.7	1.59	.46	.59	.71	18.0	5.3	1.70	.47	.61	.74
	600	285	22.8	6.7	1.37	.47	.60	.71	21.6	6.3	1.49	.48	.61	.73	20.2	5.9	1.61	.48	.62	.75	18.9	5.5	1.72	.48	.64	.78
	700	330	23.4	6.9	1.38	.48	.61	.74	22.2	6.5	1.50	.49	.63	.77	20.8	6.1	1.62	.49	.65	.80	19.5	5.7	1.74	.50	.67	.83

NOTE - For Temperatures and Capacities not shown in tables, see bulletin - Cooling Unit Rating Table Correction Factor Data in Miscellaneous Engineering Data section.

Entering Wet Bulb Temperature	Total Air Volume		Outdoor Air Temperature Entering Outdoor Coil: 85°F (29°C)						95°F (35°C)						105°F (41°C)						115°F (46°C)					
			Total Cooling Capacity		Comp Motor kW Input	Sensible To Total Ratio (S/T) Dry Bulb			Total Cooling Capacity		Comp Motor kW Input	Sensible To Total Ratio (S/T) Dry Bulb			Total Cooling Capacity		Comp Motor kW Input	Sensible To Total Ratio (S/T) Dry Bulb			Total Cooling Capacity		Comp Motor kW Input	Sensible To Total Ratio (S/T) Dry Bulb		
	cfm	L/s	kBtuh	kW		75°F 24°C	80°F 27°C	85°F 29°C	kBtuh	kW		75°F 24°C	80°F 27°C	85°F 29°C	kBtuh	kW		75°F 24°C	80°F 27°C	85°F 29°C	kBtuh	kW		75°F 24°C	80°F 27°C	85°F 29°C
HS29-024 - C33-24A/B COOLING CAPACITY - TXV Systems Only																										
63°F (17°C)	650	305	24.0	7.0	1.75	.74	.87	.98	23.2	6.8	1.96	.75	.88	1.00	22.2	6.5	2.21	.77	.90	1.00	21.2	6.2	2.49	.78	.93	1.00
	800	380	25.0	7.3	1.76	.78	.92	1.00	24.2	7.1	1.97	.79	.94	1.00	23.2	6.8	2.22	.81	.97	1.00	22.0	6.4	2.50	.83	.99	1.00
	950	450	26.0	7.6	1.77	.82	.97	1.00	25.0	7.3	1.98	.84	.99	1.00	24.0	7.0	2.23	.86	1.00	1.00	23.0	6.7	2.51	.88	1.00	1.00
67°F (19°C)	650	305	25.2	7.4	1.76	.60	.72	.83	24.4	7.2	1.98	.61	.73	.85	23.4	6.9	2.22	.61	.74	.87	22.2	6.5	2.50	.62	.76	.89
	800	380	26.4	7.7	1.77	.62	.76	.89	25.4	7.4	1.99	.63	.77	.91	24.4	7.2	2.24	.64	.79	.93	23.4	6.9	2.52	.65	.81	.96
	950	450	27.2	8.0	1.78	.65	.79	.94	26.2	7.7	2.00	.66	.81	.96	25.2	7.4	2.25	.67	.83	.98	24.0	7.0	2.53	.68	.86	1.00
71°F (22°C)	650	305	26.2	7.7	1.77	.47	.59	.70	25.4	7.4	1.99	.47	.59	.71	24.4	7.2	2.24	.47	.60	.72	23.4	6.9	2.52	.47	.61	.73
	800	380	27.4	8.0	1.78	.48	.61	.73	26.6	7.8	2.00	.48	.62	.75	25.6	7.5	2.25	.49	.63	.76	24.4	7.2	2.53	.49	.64	.78
	950	450	28.4	8.3	1.80	.49	.63	.77	27.4	8.0	2.01	.50	.64	.79	26.4	7.7	2.26	.50	.66	.81	25.2	7.4	2.54	.51	.67	.83
HS29-024 - C33-30A/B COOLING CAPACITY - TXV Systems Only																										
63°F (17°C)	650	305	24.4	7.2	1.75	.75	.87	.99	23.6	6.9	1.97	.76	.89	1.00	22.6	6.6	2.21	.77	.91	1.00	21.4	6.3	2.49	.79	.94	1.00
	800	380	25.6	7.5	1.76	.79	.93	1.00	24.6	7.2	1.98	.80	.95	1.00	23.6	6.9	2.22	.82	.98	1.00	22.4	6.6	2.50	.84	1.00	1.00
	950	450	26.4	7.7	1.77	.83	.98	1.00	25.6	7.5	1.99	.85	1.00	1.00	24.4	7.2	2.24	.87	1.00	1.00	23.4	6.9	2.52	.89	1.00	1.00
67°F (19°C)	650	305	25.6	7.5	1.76	.60	.72	.84	24.8	7.3	1.98	.61	.73	.86	23.8	7.0	2.23	.61	.75	.87	22.6	6.6	2.51	.62	.76	.90
	800	380	26.8	7.9	1.78	.63	.76	.90	25.8	7.6	1.99	.64	.78	.92	24.8	7.3	2.24	.65	.80	.94	23.6	6.9	2.52	.66	.82	.97
	950	450	27.6	8.1	1.79	.65	.80	.95	26.6	7.8	2.00	.66	.82	.97	25.6	7.5	2.25	.68	.84	.99	24.4	7.2	2.53	.69	.87	1.00
71°F (22°C)	650	305	26.6	7.8	1.77	.47	.59	.70	25.8	7.6	1.99	.47	.59	.71	24.8	7.3	2.24	.47	.60	.72	23.6	6.9	2.52	.47	.61	.74
	800	380	28.0	8.2	1.79	.48	.61	.74	27.0	7.9	2.01	.49	.62	.76	26.0	7.6	2.26	.49	.63	.77	24.8	7.3	2.54	.49	.65	.79
	950	450	28.8	8.4	1.80	.49	.64	.78	28.0	8.2	2.02	.50	.65	.80	26.8	7.9	2.27	.50	.66	.82	25.6	7.5	2.55	.51	.68	.84
HS29-024 - C33-24C with G61MPV-36C-090 COOLING CAPACITY - TXV Systems Only																										
63°F (17°C)	790	375	25.0	7.3	1.76	.77	.91	1.00	24.0	7.0	1.97	.78	.93	1.00	23.0	6.7	2.22	.80	.95	1.00	21.8	6.4	2.50	.82	.98	1.00
	880	415	25.4	7.4	1.76	.79	.94	1.00	24.6	7.2	1.98	.81	.96	1.00	23.6	6.9	2.22	.83	.98	1.00	22.4	6.6	2.50	.85	1.00	1.00
	960	455	26.0	7.6	1.77	.81	.97	1.00	25.0	7.3	1.98	.83	.99	1.00	24.0	7.0	2.23	.85	1.00	1.00	22.8	6.7	2.51	.88	1.00	1.00
67°F (19°C)	790	375	26.2	7.7	1.77	.61	.75	.88	25.2	7.4	1.99	.62	.76	.89	24.4	7.2	2.24	.63	.78	.92	23.2	6.8	2.52	.64	.80	.95
	880	415	26.6	7.8	1.78	.63	.77	.91	25.8	7.6	1.99	.64	.78	.93	24.8	7.3	2.24	.65	.80	.96	23.6	6.9	2.52	.66	.83	.98
	960	455	27.0	7.9	1.78	.64	.79	.93	26.2	7.7	2.00	.65	.81	.96	25.2	7.4	2.25	.66	.83	.98	24.0	7.0	2.53	.68	.85	1.00
71°F (22°C)	790	375	27.2	8.0	1.78	.47	.60	.72	26.4	7.7	2.00	.47	.61	.74	25.4	7.4	2.25	.48	.62	.75	24.2	7.1	2.53	.48	.63	.77
	880	415	27.8	8.1	1.79	.48	.62	.75	27.0	7.9	2.01	.48	.62	.76	26.0	7.6	2.26	.49	.64	.78	24.8	7.3	2.54	.49	.65	.80
	960	455	28.2	8.3	1.79	.49	.63	.77	27.4	8.0	2.01	.49	.64	.78	26.4	7.7	2.26	.49	.65	.80	25.2	7.4	2.54	.50	.67	.83
HS29-024 - C33-24A/B with G60UHV-36A/B COOLING CAPACITY - TXV Systems Only																										
63°F (17°C)	750	355	24.8	7.3	1.75	.76	.89	1.00	23.8	7.0	1.97	.77	.92	1.00	22.8	6.7	2.22	.79	.94	1.00	21.6	6.3	2.49	.81	.97	1.00
	850	400	25.4	7.4	1.76	.79	.93	1.00	24.4	7.2	1.98	.80	.95	1.00	23.4	6.9	2.22	.82	.98	1.00	22.2	6.5	2.50	.84	1.00	1.00
	950	450	25.8	7.6	1.77	.81	.96	1.00	25.0	7.3	1.98	.83	.98	1.00	24.0	7.0	2.23	.85	1.00	1.00	22.8	6.7	2.51	.87	1.00	1.00
67°F (19°C)	750	355	26.0	7.6	1.77	.61	.74	.86	25.0	7.3	1.98	.62	.75	.88	24.2	7.1	2.23	.62	.76	.90	23.0	6.7	2.51	.63	.78	.93
	850	400	26.6	7.8	1.77	.62	.76	.90	25.6	7.5	1.99	.63	.78	.92	24.6	7.2	2.24	.64	.80	.94	23.6	6.9	2.52	.65	.82	.97
	950	450	27.0	7.9	1.78	.64	.79	.93	26.2	7.7	2.00	.65	.80	.95	25.2	7.4	2.25	.66	.82	.98	24.0	7.0	2.53	.67	.85	1.00
71°F (22°C)	750	355	27.0	7.9	1.78	.47	.59	.71	26.2	7.7	2.00	.47	.60	.73	25.2	7.4	2.25	.47	.61	.74	24.0	7.0	2.53	.47	.62	.76
	850	400	27.6	8.1	1.79	.48	.61	.74	26.8	7.9	2.01	.48	.62	.75	25.8	7.6	2.26	.48	.63	.77	24.6	7.2	2.54	.49	.64	.79
	950	450	28.2	8.3	1.79	.48	.63	.76	27.2	8.0	2.01	.49	.64	.78	26.4	7.7	2.26	.49	.65	.80	25.0	7.3	2.54	.50	.66	.82
HS29-024 - C33-24B with G61MPV-36B COOLING CAPACITY - TXV Systems Only																										
63°F (17°C)	845	400	25.2	7.4	1.76	.78	.93	1.00	24.4	7.2	1.98	.80	.95	1.00	23.4	6.9	2.22	.82	.97	1.00	22.2	6.5	2.50	.84	1.00	1.00
	945	445	25.8	7.6	1.77	.81	.96	1.00	25.0	7.3	1.98	.83	.98	1.00	24.0	7.0	2.23	.85	1.00	1.00	22.8	6.7	2.51	.87	1.00	1.00
	1060	500	26.4	7.7	1.77	.84	.99	1.00	25.4	7.4	1.99	.86	1.00	1.00	24.6	7.2	2.24	.88	1.00	1.00	23.4	6.9	2.52	.91	1.00	1.00
67°F (19°C)	845	400	26.6	7.8	1.77	.62	.76	.90	25.6	7.5	1.99	.63	.78	.92	24.6	7.2	2.24	.64	.79	.94	23.4	6.9	2.52	.65	.81	.97
	945	445	27.0	7.9	1.78	.64	.79	.93	26.2	7.7	2.00	.65	.80	.95	25.2	7.4	2.25	.66	.82	.98	24.0	7.0	2.53	.67	.85	1.00
	1060	500	27.6	8.1	1.79	.65	.81	.96	26.6	7.8	2.00	.67	.83	.98	25.6	7.5	2.25	.68	.86	1.00	24.4	7.2	2.53	.70	.88	1.00
71°F (22°C)	845	400	27.6	8.1	1.79	.48	.61	.74	26.8	7.9	2.00	.48	.62	.75	25.8	7.6	2.26	.48	.63	.77	24.6	7.2	2.54	.48	.64	.79
	945	445	28.2	8.3	1.79	.48	.63	.76	27.2	8.0	2.01	.49	.64	.78	26.2	7.7	2.26	.49	.65	.80	25.0	7.3	2.54	.50	.66	.82
	1060	500	28.8	8.4	1.80	.49	.64	.79	27.8	8.1	2.02	.50	.66	.81	26.8	7.9	2.27	.50	.67	.83	25.6	7.5	2.55	.51	.69	.86
HS29-024 - C33-30C with G61MPV-36C-090 COOLING CAPACITY - TXV Systems Only																										
63°F (17°C)	790	375	25.4	7.4	1.76	.78	.92	1.00	24.4	7.2	1.98	.79	.94	1.00	23.4	6.9	2.22	.81	.96	1.00	22.2	6.5	2.50	.83	.99	1.00
	880	415	26.0	7.6	1.77	.80	.95	1.00	25.0	7.3	1.98	.82	.97	1.00	24.0	7.0	2.23	.84	.99	1.00	22.8	6.7	2.51	.86	1.00	1.00
	960	455	26.4	7.7	1.77	.82	.98	1.00	25.4	7.4	1.99	.84	1.00	1.00	24.4	7.2	2.24	.86	1.00	1.00	23.4	6.9	2.52	.89	1.00	1.00
67°F (19°C)	790	375	26.6	7.8	1.77	.62	.75	.89	25.8	7.6	1.99	.63	.77	.90	24.6	7.2	2.24	.63	.78	.93	23.4	6.9	2.52	.65	.80	.96
	880	415	27.2	8.0	1.78	.63	.78	.92	26.2	7.7	2.00	.64	.80	.94	25.2	7.4	2.25	.65	.81	.97	24.0	7.0	2.53	.67	.84	.99
	960	455	27.6	8.1	1.79	.65	.80	.95	26.6	7.8	2.00	.66	.82	.97	25.6	7.5	2.25	.67	.84	.99	24.4	7.2	2.53	.68	.86	1.00
71°F (22°C)	790	375	27.8	8.1	1.79	.47	.60	.73	26.8	7.9	2.01	.48	.61	.74	25.8	7.6	2.26	.48	.62	.76	24.6	7.2	2.54	.48	.63	.78
	880	415	28.4	8.3	1.80	.48	.62	.76	27.4	8.0	2.01	.48	.63	.77	26.4	7.7	2.26	.49	.64	.79	25.0	7.3	2.54	.49	.66	.81
	960	455	28.8	8.4	1.80	.49	.63	.78	27.8	8.1	2.02	.49	.65	.79	26.8	7.9	2.27	.50	.66	.81	25.6	7.5	2.55	.50	.67	.84
HS29-024 - C33-30A/B with G60UHV-36A/B COOLING CAPACITY - TXV Systems Only																										
63°F (17°C)	750	355	25.2	7.4	1.76	.77	.91	1.00	24.2	7.1	1.97	.78	.92	1.00	23.2	6.8	2.22	.80	.95	1.00	22.0	6.4	2.50	.82	.98	1.00
	850	400	25.8	7.6	1.77	.79	.94	1.00	24.8	7.3	1.98	.81	.97	1.00	23.8	7.0	2.23	.83	.99	1.00	22.6	6.6	2.51	.85	1.00	1.00
	950	450	26.4	7.7	1.77	.82	.98	1.00	25.4	7.4	1.99	.84	.99	1.00	24.4	7.2	2.24	.86	1.00	1.00	23.2	6.8	2.52	.88	1.00	1.00
67°F (19°C)	750	355	26.4	7.7	1.77	.61	.74	.87	25.4	7.4	1.99	.62	.76	.89	24.4	7.2	2.24	.63	.77	.91	23.2	6.8	2.52	.64	.79	.94
	850	400	27.0	7.9	1.78	.63	.77	.91	26.2	7.7	2.00	.64	.79	.93	25.0	7.3	2.24	.65	.80	.96	23.8	7.0	2.53	.66	.83	.98
	950	450	27.6	8.1	1.79	.65	.80	.95	26.6	7.8	2.00	.66	.81	.97	25.6	7.5	2.25	.67	.84	.99	24.2	7.1	2.53	.68	.86	1.00
71°F (22°C)	750	355	27.4	8.0	1.79	.47	.60	.72	26.6	7.8	2.00	.47	.61	.73	25.6	7.5	2.25	.48	.62	.75	24.4	7.2	2.53	.48	.63	.77
	850	400	28.2	8.3	1.79	.48	.62	.75	27.2	8.0	2.01	.48	.63	.76	26.2	7.7	2.26	.49	.64	.78	25.0	7.3	2.54	.49	.65	.80
	950	450	28.8	8.4	1.80	.49	.63	.77	27.8	8.1	2.02	.49	.64	.79	26.8	7.9	2.27	.50	.66	.81	25.4	7.4	2.55	.50	.67	.84

NOTE - For Temperatures and Capacities not shown in tables, see bulletin - Cooling Unit Rating Table Correction Factor Data in Miscellaneous Engineering Data section.

Entering Wet Bulb Temperature	Total Air Volume		Outdoor Air Temperature Entering Outdoor Coil																							
			85°F (29°C)						95°F (35°C)						105°F (41°C)						115°F (46°C)					
			Total Cooling Capacity		Comp Motor kW Input	Sensible To Total Ratio (S/T) Dry Bulb			Total Cooling Capacity		Comp Motor kW Input	Sensible To Total Ratio (S/T) Dry Bulb			Total Cooling Capacity		Comp Motor kW Input	Sensible To Total Ratio (S/T) Dry Bulb			Total Cooling Capacity		Comp Motor kW Input	Sensible To Total Ratio (S/T) Dry Bulb		
	cfm	L/s	kBtuh	kW		75°F 24°C	80°F 27°C	85°F 29°C	kBtuh	kW		75°F 24°C	80°F 27°C	85°F 29°C	kBtuh	kW		75°F 24°C	80°F 27°C	85°F 29°C	kBtuh	kW		75°F 24°C	80°F 27°C	85°F 29°C
HS29-024 - C33-36C with G61MPV-36C-090 COOLING CAPACITY - TXV Systems Only																										
63°F (17°C)	790	375	25.6	7.5	1.76	.78	.93	1.00	24.6	7.2	1.98	.80	.95	1.00	23.6	6.9	2.22	.82	.97	1.00	22.4	6.6	2.51	.84	.99	1.00
	880	415	26.2	7.7	1.77	.81	.96	1.00	25.2	7.4	1.99	.83	.98	1.00	24.2	7.1	2.23	.85	1.00	1.00	23.0	6.7	2.51	.87	1.00	1.00
	960	455	26.8	7.9	1.78	.83	.99	1.00	25.8	7.6	1.99	.85	1.00	1.00	24.8	7.3	2.24	.87	1.00	1.00	23.6	6.9	2.52	.90	1.00	1.00
67°F (19°C)	790	375	27.0	7.9	1.78	.62	.76	.89	26.0	7.6	2.00	.63	.77	.91	24.8	7.3	2.24	.64	.79	.94	23.6	6.9	2.52	.65	.81	.96
	880	415	27.6	8.1	1.79	.64	.79	.93	26.6	7.8	2.00	.65	.80	.95	25.4	7.4	2.25	.66	.82	.98	24.0	7.0	2.53	.67	.85	1.00
	960	455	28.0	8.2	1.79	.65	.81	.96	27.0	7.9	2.01	.66	.83	.98	25.8	7.6	2.25	.67	.85	1.00	24.4	7.2	2.53	.69	.87	1.00
71°F (22°C)	790	375	28.0	8.2	1.79	.47	.61	.74	27.0	7.9	2.01	.48	.62	.75	26.0	7.6	2.26	.48	.63	.77	24.8	7.3	2.54	.49	.64	.79
	880	415	28.6	8.4	1.80	.48	.63	.76	27.8	8.1	2.02	.48	.63	.78	26.6	7.8	2.27	.49	.65	.80	25.4	7.4	2.55	.50	.66	.82
	960	455	29.2	8.6	1.81	.49	.64	.79	28.2	8.3	2.02	.49	.65	.80	27.0	7.9	2.27	.50	.66	.82	25.8	7.6	2.55	.50	.68	.85
HS29-024 - C33-30B with G61MPV-36B COOLING CAPACITY - TXV Systems Only																										
63°F (17°C)	845	400	25.8	7.6	1.77	.79	.94	1.00	24.8	7.3	1.98	.81	.96	1.00	23.8	7.0	2.23	.83	.98	1.00	22.6	6.6	2.51	.85	1.00	1.00
	945	445	26.4	7.7	1.77	.82	.97	1.00	25.4	7.4	1.99	.84	.99	1.00	24.4	7.2	2.24	.86	1.00	1.00	23.2	6.8	2.52	.88	1.00	1.00
	1060	500	27.0	7.9	1.78	.85	1.00	1.00	26.0	7.6	2.00	.87	1.00	1.00	25.0	7.3	2.24	.89	1.00	1.00	24.0	7.0	2.53	.92	1.00	1.00
67°F (19°C)	845	400	27.0	7.9	1.78	.63	.77	.91	26.0	7.6	2.00	.64	.78	.93	25.0	7.3	2.24	.65	.80	.95	23.8	7.0	2.53	.66	.82	.98
	945	445	27.6	8.1	1.79	.64	.80	.94	26.6	7.8	2.00	.65	.81	.97	25.4	7.4	2.25	.67	.83	.99	24.2	7.1	2.53	.68	.86	1.00
	1060	500	28.0	8.2	1.79	.66	.83	.98	27.0	7.9	2.01	.68	.85	1.00	26.0	7.6	2.26	.69	.87	1.00	24.6	7.2	2.54	.71	.90	1.00
71°F (22°C)	845	400	28.2	8.3	1.79	.48	.61	.75	27.2	8.0	2.01	.48	.62	.76	26.2	7.7	2.26	.48	.64	.78	25.0	7.3	2.54	.49	.65	.80
	945	445	28.8	8.4	1.80	.49	.63	.77	27.8	8.1	2.02	.49	.64	.79	26.6	7.8	2.27	.49	.66	.81	25.4	7.4	2.55	.50	.67	.84
	1060	500	29.2	8.6	1.81	.49	.65	.80	28.2	8.3	2.02	.50	.66	.82	27.2	8.0	2.27	.51	.68	.85	26.0	7.6	2.56	.51	.70	.87
HS29-024 - C33-36A/B with G60UHV-36A/B COOLING CAPACITY - TXV Systems Only																										
63°F (17°C)	750	355	25.4	7.4	1.76	.77	.91	1.00	24.4	7.2	1.98	.79	.93	1.00	23.4	6.9	2.22	.80	.95	1.00	22.0	6.4	2.50	.82	.98	1.00
	850	400	26.0	7.6	1.77	.80	.95	1.00	25.0	7.3	1.98	.82	.97	1.00	24.0	7.0	2.23	.84	.99	1.00	22.8	6.7	2.51	.86	1.00	1.00
	950	450	26.6	7.8	1.78	.83	.98	1.00	25.8	7.6	1.99	.85	1.00	1.00	24.6	7.2	2.24	.87	1.00	1.00	23.6	6.9	2.52	.89	1.00	1.00
67°F (19°C)	750	355	26.6	7.8	1.77	.61	.75	.88	25.6	7.5	1.99	.62	.76	.90	24.6	7.2	2.24	.63	.78	.92	23.2	6.8	2.52	.64	.80	.95
	850	400	27.4	8.0	1.78	.63	.78	.92	26.4	7.7	2.00	.64	.79	.94	25.2	7.4	2.25	.65	.81	.96	23.8	7.0	2.53	.67	.84	.99
	950	450	27.8	8.1	1.79	.65	.81	.96	26.8	7.9	2.01	.66	.82	.98	25.8	7.6	2.25	.67	.84	1.00	24.4	7.2	2.53	.69	.87	1.00
71°F (22°C)	750	355	27.8	8.1	1.79	.47	.60	.73	26.8	7.9	2.00	.47	.61	.74	25.8	7.6	2.25	.48	.62	.76	24.4	7.2	2.53	.48	.63	.78
	850	400	28.6	8.4	1.80	.48	.62	.76	27.6	8.1	2.01	.48	.63	.77	26.4	7.7	2.26	.49	.64	.79	25.2	7.4	2.54	.49	.66	.81
	950	450	29.2	8.6	1.81	.49	.64	.78	28.0	8.2	2.02	.49	.65	.80	27.0	7.9	2.27	.50	.66	.82	25.6	7.5	2.55	.50	.68	.85
HS29-024 - C33-36B with G61MPV-36B COOLING CAPACITY - TXV Systems Only																										
63°F (17°C)	845	400	26.0	7.6	1.77	.80	.95	1.00	25.0	7.3	1.98	.81	.97	1.00	24.0	7.0	2.23	.83	.99	1.00	22.8	6.7	2.51	.86	1.00	1.00
	945	445	26.6	7.8	1.78	.83	.98	1.00	25.6	7.5	1.99	.85	1.00	1.00	24.6	7.2	2.24	.87	1.00	1.00	23.4	6.9	2.52	.89	1.00	1.00
	1060	500	27.4	8.0	1.78	.86	1.00	1.00	26.4	7.7	2.00	.88	1.00	1.00	25.4	7.4	2.25	.90	1.00	1.00	24.2	7.1	2.53	.93	1.00	1.00
67°F (19°C)	845	400	27.2	8.0	1.78	.63	.78	.92	26.4	7.7	2.00	.64	.79	.94	25.2	7.4	2.25	.65	.81	.96	23.8	7.0	2.53	.67	.83	.99
	945	445	27.8	8.1	1.79	.65	.80	.95	26.8	7.9	2.01	.66	.82	.98	25.8	7.6	2.25	.67	.84	1.00	24.4	7.2	2.53	.69	.87	1.00
	1060	500	28.4	8.3	1.80	.67	.84	.99	27.4	8.0	2.01	.68	.86	1.00	26.2	7.7	2.26	.70	.88	1.00	24.8	7.3	2.54	.71	.91	1.00
71°F (22°C)	845	400	28.4	8.3	1.80	.48	.62	.75	27.4	8.0	2.01	.48	.63	.77	26.4	7.7	2.26	.49	.64	.79	25.2	7.4	2.54	.49	.65	.81
	945	445	29.0	8.5	1.80	.49	.64	.78	28.0	8.2	2.02	.49	.65	.80	27.0	7.9	2.27	.50	.66	.82	25.6	7.5	2.55	.50	.68	.85
	1060	500	29.6	8.7	1.81	.50	.66	.82	28.6	8.4	2.03	.50	.67	.84	27.4	8.0	2.28	.51	.69	.86	26.2	7.7	2.56	.52	.70	.89
HS29-024 - C33-38A/B with G60UHV-36A/B COOLING CAPACITY - TXV Systems Only																										
63°F (17°C)	750	355	26.2	7.7	1.77	.77	.91	1.00	25.0	7.3	1.98	.78	.93	1.00	24.0	7.0	2.23	.80	.95	1.00	22.6	6.6	2.51	.82	.98	1.00
	850	400	26.8	7.9	1.78	.80	.95	1.00	25.8	7.6	1.99	.81	.97	1.00	24.6	7.2	2.24	.83	.99	1.00	23.4	6.9	2.52	.85	1.00	1.00
	950	450	27.4	8.0	1.78	.83	.99	1.00	26.4	7.7	2.00	.84	1.00	1.00	25.2	7.4	2.25	.87	1.00	1.00	24.2	7.1	2.53	.89	1.00	1.00
67°F (19°C)	750	355	27.6	8.1	1.79	.61	.74	.87	26.6	7.8	2.00	.62	.76	.89	25.4	7.4	2.25	.62	.77	.92	24.2	7.1	2.53	.63	.79	.94
	850	400	28.2	8.3	1.79	.63	.77	.91	27.2	8.0	2.01	.63	.79	.94	26.0	7.6	2.26	.65	.81	.96	24.6	7.2	2.54	.66	.83	.99
	950	450	28.8	8.4	1.80	.64	.80	.95	27.6	8.1	2.02	.66	.82	.98	26.6	7.8	2.26	.67	.84	1.00	25.2	7.4	2.55	.68	.87	1.00
71°F (22°C)	750	355	29.0	8.5	1.80	.46	.59	.72	28.0	8.2	2.02	.47	.60	.73	26.8	7.9	2.27	.47	.61	.75	25.6	7.5	2.55	.47	.62	.77
	850	400	29.8	8.7	1.81	.48	.62	.75	28.6	8.4	2.03	.48	.63	.76	27.6	8.1	2.28	.48	.64	.78	26.2	7.7	2.56	.48	.65	.81
	950	450	30.2	8.9	1.82	.48	.63	.78	29.2	8.6	2.04	.49	.65	.80	28.0	8.2	2.28	.49	.66	.82	26.6	7.8	2.57	.50	.67	.84
HS29-024 - C33-38B with G61MPV-36B COOLING CAPACITY - TXV Systems Only																										
63°F (17°C)	845	400	26.8	7.9	1.78	.79	.94	1.00	25.8	7.6	1.99	.81	.97	1.00	24.6	7.2	2.24	.83	.99	1.00	23.4	6.9	2.52	.85	1.00	1.00
	945	445	27.4	8.0	1.78	.83	.98	1.00	26.4	7.7	2.00	.84	1.00	1.00	25.2	7.4	2.25	.86	1.00	1.00	24.2	7.1	2.53	.89	1.00	1.00
	1060	500	28.0	8.2	1.79	.86	1.00	1.00	27.2	8.0	2.01	.88	1.00	1.00	26.2	7.7	2.26	.90	1.00	1.00	24.8	7.3	2.54	.93	1.00	1.00
67°F (19°C)	845	400	28.2	8.3	1.79	.63	.77	.91	27.2	8.0	2.01	.63	.78	.93	26.0	7.6	2.26	.65	.81	.96	24.6	7.2	2.54	.66	.83	.99
	945	445	28.8	8.4	1.80	.64	.80	.95	27.6	8.1	2.02	.66	.82	.97	26.6	7.8	2.26	.67	.84	1.00	25.2	7.4	2.55	.68	.87	1.00
	1060	500	29.4	8.6	1.81	.66	.84	.99	28.2	8.3	2.02	.68	.86	1.00	27.0	7.9	2.27	.69	.88	1.00	25.6	7.5	2.55	.71	.91	1.00
71°F (22°C)	845	400	29.8	8.7	1.81	.48	.62	.75	28.6	8.4	2.03	.48	.62	.76	27.4	8.0	2.28	.48	.63	.78	26.0	7.6	2.56	.48	.65	.81
	945	445	30.2	8.9	1.82	.48	.63	.78	29.2	8.6	2.03	.48	.65	.80	28.0	8.2	2.28	.49	.66	.82	26.6	7.8	2.57	.50	.67	.84
	1060	500	30.8	9.0	1.82	.49	.66	.81	29.6	8.7	2.04	.50	.67	.83	28.4	8.3	2.29	.50	.68	.86	27.0	7.9	2.57	.51	.70	.89
HS29-024 - CR26-18N-F COOLING CAPACITY - TXV Systems Only																										
63°F (17°C)	650	305	22.4	6.6	1.73	.75	.88	.98	21.4	6.3	1.94	.76	.90	.99	20.6	6.0	2.18	.78	.91	1.00	19.4	5.7	2.46	.79	.94	1.00
	800	380	23.4	6.9	1.74	.79	.93	1.00	22.4	6.6	1.95	.80	.95	1.00	21.4	6.3	2.20	.82	.97	1.00	20.2	5.9	2.48	.85	.98	1.00
	950	450	24.0	7.0	1.75	.83	.97	1.00	23.2	6.8	1.96	.85	.98	1.00	22.2	6.5	2.21	.87	.99	1.00	21.0	6.2	2.49	.89	1.00	1.00
67°F (19°C)	650	305	23.4	6.9	1.74	.60	.73	.84	22.6	6.6	1.95	.61	.74	.86	21.6	6.3	2.20	.62	.75	.88	20.4	6.0	2.48	.63	.77	.90
	800	380	24.6	7.2	1.75	.63	.77	.90	23.6	6.9	1.97	.64	.78	.92	22.6	6.6	2.21	.64	.80	.94	21.4	6.3	2.49	.66	.82	.96
	950	450	25.2	7.4	1.76	.65	.81	.94	24.4	7.2	1.98	.66	.82	.96	23.2	6.8	2.22	.67	.84	.97	22.2	6.5	2.50	.69	.87	.99
71°F (22°C)	650	305	24.4	7.2	1.75	.46	.59	.70	23.6	6.9	1.97	.47	.59	.71	22.6	6.6	2.21	.47	.60	.73	21.6	6.3	2.49	.48	.61	.74
	800	380	25.6	7.5	1.76	.48	.62	.75	24.8	7.3	1.98	.48	.62	.76	23.8	7.0	2.23	.49	.63	.77	22.6	6.6	2.51	.49	.65	.79
	950	450	26.6	7.8	1.77	.50	.64	.78	25.4	7.4	1.99	.50	.65	.80	24.4	7.2	2.24	.50	.66	.82	23.2	6.8	2.52	.51	.68	.84

NOTE - For Temperatures and Capacities not shown in tables, see bulletin - Cooling Unit Rating Table Correction Factor Data in Miscellaneous Engineering Data section.

Entering Wet Bulb Temperature	Total Air Volume		Outdoor Air Temperature Entering Outdoor Coil																							
			85°F (29°C)						95°F (35°C)						105°F (41°C)						115°F (46°C)					
			Total Cooling Capacity		Comp Motor kW Input	Sensible To Total Ratio (S/T) Dry Bulb			Total Cooling Capacity		Comp Motor kW Input	Sensible To Total Ratio (S/T) Dry Bulb			Total Cooling Capacity		Comp Motor kW Input	Sensible To Total Ratio (S/T) Dry Bulb			Total Cooling Capacity		Comp Motor kW Input	Sensible To Total Ratio (S/T) Dry Bulb		
	cfm	L/s	kBtuh	kW		75°F 24°C	80°F 27°C	85°F 29°C	kBtuh	kW		75°F 24°C	80°F 27°C	85°F 29°C	kBtuh	kW		75°F 24°C	80°F 27°C	85°F 29°C	kBtuh	kW		75°F 24°C	80°F 27°C	85°F 29°C
HS29-024 - CR26-30N-F COOLING CAPACITY - TXV Systems Only																										
63°F (17°C)	650	305	24.4	7.2	1.75	.74	.87	.98	23.6	6.9	1.97	.75	.89	1.00	22.6	6.6	2.21	.77	.91	1.00	21.4	6.3	2.49	.79	.93	1.00
	800	380	25.6	7.5	1.76	.79	.93	1.00	24.6	7.2	1.98	.80	.95	1.00	23.6	6.9	2.22	.82	.97	1.00	22.4	6.6	2.51	.84	.99	1.00
	950	450	26.4	7.7	1.77	.83	.97	1.00	25.6	7.5	1.99	.85	.99	1.00	24.4	7.2	2.24	.87	1.00	1.00	23.4	6.9	2.52	.89	1.00	1.00
67°F (19°C)	650	305	25.8	7.6	1.77	.60	.72	.84	25.0	7.3	1.98	.60	.73	.85	24.0	7.0	2.23	.61	.74	.87	22.8	6.7	2.51	.62	.76	.90
	800	380	27.0	7.9	1.78	.62	.76	.89	26.0	7.6	2.00	.63	.78	.91	24.8	7.3	2.24	.64	.79	.94	23.6	6.9	2.52	.66	.82	.96
	950	450	27.6	8.1	1.79	.65	.81	.94	26.6	7.8	2.00	.66	.82	.97	25.6	7.5	2.25	.68	.84	.99	24.4	7.2	2.53	.69	.87	1.00
71°F (22°C)	650	305	27.2	8.0	1.78	.47	.58	.70	26.2	7.7	2.00	.47	.59	.71	25.2	7.4	2.25	.47	.60	.72	24.0	7.0	2.53	.47	.61	.74
	800	380	28.2	8.3	1.79	.48	.61	.74	27.2	8.0	2.01	.48	.62	.75	26.2	7.7	2.26	.49	.63	.77	25.0	7.3	2.54	.49	.64	.79
	950	450	29.0	8.5	1.80	.50	.64	.78	28.0	8.2	2.02	.50	.65	.80	27.0	7.9	2.27	.50	.66	.82	25.6	7.5	2.55	.51	.68	.84
HS29-024 - CH23-31 COOLING CAPACITY - TXV Systems Only																										
63°F (17°C)	650	305	23.2	6.8	1.74	.74	.85	.97	22.6	6.6	1.95	.75	.87	.98	21.6	6.3	2.20	.76	.89	1.00	20.6	6.0	2.48	.78	.91	1.00
	800	380	24.2	7.1	1.75	.77	.90	1.00	23.4	6.9	1.96	.78	.92	1.00	22.6	6.6	2.21	.80	.95	1.00	21.6	6.3	2.49	.82	.98	1.00
	950	450	25.2	7.4	1.76	.80	.95	1.00	24.4	7.2	1.97	.82	.97	1.00	23.6	6.9	2.22	.84	.99	1.00	22.6	6.6	2.51	.87	1.00	1.00
67°F (19°C)	650	305	24.6	7.2	1.75	.60	.71	.82	23.8	7.0	1.97	.61	.72	.84	23.0	6.7	2.22	.61	.74	.86	21.8	6.4	2.50	.62	.75	.88
	800	380	25.8	7.6	1.77	.62	.75	.87	24.8	7.3	1.98	.63	.76	.89	24.0	7.0	2.23	.64	.78	.91	22.8	6.7	2.51	.65	.80	.94
	950	450	26.6	7.8	1.77	.64	.78	.92	25.8	7.6	1.99	.65	.80	.94	24.6	7.2	2.24	.66	.82	.97	23.4	6.9	2.52	.68	.84	.99
71°F (22°C)	650	305	25.8	7.6	1.77	.47	.59	.69	25.0	7.3	1.98	.46	.59	.70	24.0	7.0	2.23	.47	.60	.71	23.0	6.7	2.51	.47	.60	.73
	800	380	27.2	8.0	1.78	.48	.61	.72	26.2	7.7	2.00	.48	.62	.74	25.2	7.4	2.24	.48	.62	.75	24.0	7.0	2.53	.49	.63	.77
	950	450	28.0	8.2	1.79	.49	.63	.76	27.2	8.0	2.01	.50	.64	.77	26.0	7.6	2.26	.50	.65	.79	24.8	7.3	2.54	.50	.66	.82
HS29-024 - CH33-24/30A-2F COOLING CAPACITY - TXV Systems Only																										
63°F (17°C)	650	305	24.2	7.1	1.75	.74	.87	.98	23.4	6.9	1.96	.75	.88	1.00	22.4	6.6	2.21	.77	.90	1.00	21.4	6.3	2.49	.79	.93	1.00
	800	380	25.4	7.4	1.76	.78	.92	1.00	24.4	7.2	1.98	.80	.94	1.00	23.4	6.9	2.22	.81	.97	1.00	22.2	6.5	2.50	.84	1.00	1.00
	950	450	26.2	7.7	1.77	.82	.97	1.00	25.2	7.4	1.99	.84	.99	1.00	24.2	7.1	2.23	.86	1.00	1.00	23.2	6.8	2.52	.89	1.00	1.00
67°F (19°C)	650	305	25.4	7.4	1.76	.60	.72	.83	24.6	7.2	1.98	.60	.73	.85	23.6	6.9	2.23	.61	.74	.87	22.4	6.6	2.51	.62	.76	.89
	800	380	26.6	7.8	1.77	.62	.76	.89	25.8	7.6	1.99	.63	.77	.91	24.6	7.2	2.24	.64	.79	.93	23.6	6.9	2.52	.65	.81	.96
	950	450	27.4	8.0	1.79	.65	.80	.94	26.4	7.7	2.00	.66	.81	.97	25.4	7.4	2.25	.67	.83	.99	24.2	7.1	2.53	.68	.86	1.00
71°F (22°C)	650	305	26.4	7.7	1.77	.47	.58	.70	25.6	7.5	1.99	.47	.59	.71	24.6	7.2	2.24	.47	.60	.72	23.6	6.9	2.52	.47	.61	.73
	800	380	27.8	8.1	1.79	.48	.61	.74	26.8	7.9	2.01	.48	.62	.75	25.8	7.6	2.26	.48	.63	.77	24.6	7.2	2.54	.49	.64	.79
	950	450	28.6	8.4	1.80	.49	.64	.78	27.6	8.1	2.02	.50	.65	.79	26.6	7.8	2.27	.50	.66	.81	25.4	7.4	2.55	.51	.67	.84
HS29-024 - CH23-41 COOLING CAPACITY - TXV Systems Only																										
63°F (17°C)	650	305	24.6	7.2	1.75	.74	.86	.97	23.8	7.0	1.97	.75	.88	.99	22.6	6.6	2.21	.76	.90	1.00	21.4	6.3	2.49	.78	.92	1.00
	800	380	25.8	7.6	1.76	.77	.92	1.00	24.8	7.3	1.98	.79	.94	1.00	23.8	7.0	2.23	.81	.96	1.00	22.6	6.6	2.51	.83	.99	1.00
	950	450	26.6	7.8	1.77	.81	.97	1.00	25.6	7.5	1.99	.83	.99	1.00	24.8	7.3	2.24	.86	1.00	1.00	23.6	6.9	2.52	.88	1.00	1.00
67°F (19°C)	650	305	26.0	7.6	1.77	.59	.71	.82	25.2	7.4	1.98	.60	.72	.84	24.2	7.1	2.23	.61	.74	.86	23.0	6.7	2.51	.62	.75	.89
	800	380	27.2	8.0	1.78	.62	.75	.88	26.2	7.7	2.00	.63	.77	.90	25.2	7.4	2.25	.64	.78	.93	24.0	7.0	2.53	.65	.81	.95
	950	450	28.2	8.3	1.79	.64	.79	.94	27.2	8.0	2.01	.65	.81	.96	26.0	7.6	2.26	.66	.83	.98	24.6	7.2	2.54	.68	.86	1.00
71°F (22°C)	650	305	27.4	8.0	1.79	.46	.58	.69	26.6	7.8	2.00	.47	.58	.70	25.4	7.4	2.25	.47	.59	.71	24.4	7.2	2.53	.47	.60	.73
	800	380	28.8	8.4	1.80	.48	.61	.73	27.8	8.1	2.02	.48	.61	.74	26.6	7.8	2.26	.48	.62	.76	25.4	7.4	2.55	.49	.64	.78
	950	450	29.6	8.7	1.81	.48	.63	.77	28.6	8.4	2.03	.49	.64	.78	27.4	8.0	2.28	.50	.65	.81	26.2	7.7	2.56	.51	.67	.83
HS29-024 - CH33-36A-2F COOLING CAPACITY - TXV Systems Only																										
63°F (17°C)	650	305	24.6	7.2	1.75	.74	.86	.98	23.6	6.9	1.97	.75	.88	1.00	22.6	6.6	2.21	.76	.90	1.00	21.4	6.3	2.49	.78	.92	1.00
	800	380	25.6	7.5	1.76	.78	.92	1.00	24.6	7.2	1.98	.79	.94	1.00	23.6	6.9	2.22	.81	.97	1.00	22.2	6.5	2.50	.83	1.00	1.00
	950	450	26.4	7.7	1.77	.82	.97	1.00	25.4	7.4	1.99	.83	.99	1.00	24.4	7.2	2.24	.86	1.00	1.00	23.2	6.8	2.52	.88	1.00	1.00
67°F (19°C)	650	305	26.0	7.6	1.77	.59	.71	.83	25.0	7.3	1.98	.60	.72	.84	24.0	7.0	2.23	.61	.73	.86	22.8	6.7	2.51	.61	.75	.89
	800	380	27.2	8.0	1.78	.62	.75	.89	26.2	7.7	2.00	.63	.77	.91	25.0	7.3	2.25	.64	.79	.93	23.8	7.0	2.52	.65	.80	.96
	950	450	28.0	8.2	1.79	.64	.80	.94	26.8	7.9	2.01	.65	.82	.96	25.8	7.6	2.25	.66	.83	.99	24.4	7.2	2.54	.68	.86	1.00
71°F (22°C)	650	305	27.4	8.0	1.78	.47	.58	.69	26.4	7.7	2.00	.47	.58	.70	25.4	7.4	2.25	.47	.59	.71	24.2	7.1	2.53	.47	.60	.73
	800	380	28.6	8.4	1.80	.48	.60	.73	27.6	8.1	2.01	.48	.61	.74	26.4	7.7	2.26	.48	.62	.76	25.2	7.4	2.54	.48	.63	.78
	950	450	29.4	8.6	1.81	.49	.63	.77	28.4	8.3	2.02	.49	.64	.79	27.2	8.0	2.27	.50	.65	.81	25.8	7.6	2.55	.50	.67	.83
HS29-024 - CH33-36B-2F COOLING CAPACITY - TXV Systems Only																										
63°F (17°C)	650	305	24.6	7.2	1.75	.75	.87	.99	23.8	7.0	1.97	.76	.89	1.00	22.8	6.7	2.22	.77	.91	1.00	21.6	6.3	2.49	.79	.94	1.00
	800	380	25.8	7.6	1.77	.79	.94	1.00	24.8	7.3	1.98	.80	.96	1.00	23.8	7.0	2.23	.82	.98	1.00	22.6	6.6	2.51	.85	1.00	1.00
	950	450	26.8	7.9	1.78	.83	.99	1.00	25.8	7.6	1.99	.85	1.00	1.00	24.8	7.3	2.24	.87	1.00	1.00	23.6	6.9	2.52	.90	1.00	1.00
67°F (19°C)	650	305	25.8	7.6	1.77	.60	.72	.84	25.0	7.3	1.98	.61	.73	.86	24.0	7.0	2.23	.61	.75	.88	22.8	6.7	2.51	.63	.77	.90
	800	380	27.0	7.9	1.78	.63	.77	.90	26.2	7.7	2.00	.64	.78	.92	25.0	7.3	2.24	.65	.80	.95	23.8	7.0	2.53	.66	.82	.98
	950	450	28.0	8.2	1.79	.66	.81	.96	27.0	7.9	2.01	.67	.83	.98	25.8	7.6	2.26	.68	.85	1.00	24.6	7.2	2.54	.69	.87	1.00
71°F (22°C)	650	305	26.8	7.9	1.78	.47	.59	.70	26.0	7.6	2.00	.47	.59	.71	25.0	7.3	2.24	.47	.60	.72	23.8	7.0	2.53	.47	.61	.74
	800	380	28.2	8.3	1.79	.48	.62	.75	27.2	8.0	2.01	.49	.63	.76	26.2	7.7	2.26	.49	.63	.78	25.0	7.3	2.54	.49	.65	.80
	950	450	29.2	8.6	1.81	.50	.65	.79	28.2	8.3	2.02	.50	.66	.81	27.0	7.9	2.27	.50	.67	.83	25.8	7.6	2.55	.51	.68	.85
HS29-024 - CH33-36C-2F COOLING CAPACITY - TXV Systems Only																										
63°F (17°C)	650	305	24.6	7.2	1.75	.75	.87	.99	23.6	6.9	1.97	.76	.89	1.00	22.6	6.6	2.21	.78	.91	1.00	21.4	6.3	2.49	.79	.94	1.00
	800	380	25.8	7.6	1.77	.79	.94	1.00	24.8	7.3	1.98	.81	.96	1.00	23.6	6.9	2.23	.82	.98	1.00	22.4	6.6	2.51	.85	1.00	1.00
	950	450	26.6	7.8	1.78	.83	.98	1.00	25.6	7.5	1.99	.85	1.00	1.00	24.6	7.2	2.24	.87	1.00	1.00	23.6	6.9	2.52	.90	1.00	1.00
67°F (19°C)	650	305	25.8	7.6	1.77	.60	.73	.84	24.8	7.3	1.98	.61	.74	.86	23.8	7.0	2.23	.62	.75	.88	22.6	6.6	2.51	.63	.77	.90
	800	380	27.0	7.9	1.78	.63	.77	.90	26.0	7.6	2.00	.64	.78	.92	25.0	7.3	2.24	.65	.80	.95	23.6	6.9	2.52	.66	.82	.97
	950	450	27.8	8.1	1.79	.65	.81	.96	26.8	7.9	2.01	.67	.83	.98	25.8	7.6	2.25	.68	.85	1.00	24.4	7.2	2.53	.69	.87	1.00
71°F (22°C)	650	305	26.8	7.9	1.78	.47	.59	.70	26.0	7.6	2.00	.47	.60	.71	25.0	7.3	2.24	.48	.60	.73	23.6	6.9	2.53	.48	.62	.74
	800	380	28.2	8.3	1.79	.48	.62	.74	27.2	8.0	2.01	.49	.63	.76	26.0	7.6	2.26	.49	.64	.78	24.8	7.3	2.54	.50	.65	.80
	950	450	29.0	8.5	1.80	.49	.64	.79	28.0	8.2	2.02	.50	.65	.80	27.0	7.9	2.27	.50	.67	.83	25.6	7.5	2.55	.51	.68	.85

NOTE - For Temperatures and Capacities not shown in tables, see bulletin - Cooling Unit Rating Table Correction Factor Data in Miscellaneous Engineering Data section.

Entering Wet Bulb Temperature	Total Air Volume		Outdoor Air Temperature Entering Outdoor Coil																							
			85°F (29°C)						95°F (35°C)						105°F (41°C)						115°F (46°C)					
			Total Cooling Capacity		Comp Motor kW Input	Sensible To Total Ratio (S/T) Dry Bulb			Total Cooling Capacity		Comp Motor kW Input	Sensible To Total Ratio (S/T) Dry Bulb			Total Cooling Capacity		Comp Motor kW Input	Sensible To Total Ratio (S/T) Dry Bulb			Total Cooling Capacity		Comp Motor kW Input	Sensible To Total Ratio (S/T) Dry Bulb		
	cfm	L/s	kBtuh	kW		75°F 24°C	80°F 27°C	85°F 29°C	kBtuh	kW		75°F 24°C	80°F 27°C	85°F 29°C	kBtuh	kW		75°F 24°C	80°F 27°C	85°F 29°C	kBtuh	kW		75°F 24°C	80°F 27°C	85°F 29°C
HS29-024 - CH33-24/30A-2F with G60UHV-36A-070 COOLING CAPACITY - TXV Systems Only																										
63°F (17°C)	750	355	25.0	7.3	1.76	.76	.90	1.00	24.2	7.1	1.97	.77	.92	1.00	23.0	6.7	2.22	.79	.94	1.00	22.0	6.4	2.50	.81	.97	1.00
	850	400	25.6	7.5	1.76	.79	.94	1.00	24.6	7.2	1.98	.80	.96	1.00	23.6	6.9	2.23	.82	.98	1.00	22.4	6.6	2.50	.85	1.00	1.00
	950	450	26.2	7.7	1.77	.81	.97	1.00	25.2	7.4	1.99	.83	.99	1.00	24.2	7.1	2.23	.85	1.00	1.00	23.2	6.8	2.52	.88	1.00	1.00
67°F (19°C)	750	355	26.2	7.7	1.77	.61	.74	.87	25.2	7.4	1.99	.61	.75	.88	24.4	7.2	2.24	.62	.77	.90	23.2	6.8	2.52	.63	.79	.93
	850	400	26.8	7.9	1.78	.63	.77	.90	26.0	7.6	1.99	.63	.78	.92	24.8	7.3	2.24	.64	.80	.95	23.8	7.0	2.52	.65	.82	.98
	950	450	27.4	8.0	1.78	.64	.79	.94	26.4	7.7	2.00	.65	.81	.96	25.4	7.4	2.25	.66	.83	.98	24.2	7.1	2.53	.68	.85	1.00
71°F (22°C)	750	355	27.2	8.0	1.78	.47	.60	.71	26.4	7.7	2.00	.47	.60	.73	25.4	7.4	2.25	.47	.61	.74	24.2	7.1	2.53	.47	.62	.76
	850	400	28.0	8.2	1.79	.48	.61	.74	27.0	7.9	2.01	.48	.62	.76	26.0	7.6	2.26	.48	.63	.77	24.8	7.3	2.54	.49	.64	.80
	950	450	28.6	8.4	1.80	.49	.63	.77	27.6	8.1	2.02	.49	.64	.78	26.6	7.8	2.26	.49	.65	.80	25.4	7.4	2.55	.50	.66	.83
HS29-024 - CH33-36C-2F with G61MPV-36C-090 COOLING CAPACITY - TXV Systems Only																										
63°F (17°C)	790	375	25.6	7.5	1.76	.78	.92	1.00	24.8	7.3	1.98	.79	.94	1.00	23.6	6.9	2.23	.81	.97	1.00	22.4	6.6	2.50	.83	1.00	1.00
	880	415	26.2	7.7	1.77	.81	.96	1.00	25.2	7.4	1.99	.82	.98	1.00	24.2	7.1	2.23	.84	1.00	1.00	23.0	6.7	2.52	.87	1.00	1.00
	960	455	26.8	7.9	1.78	.83	.98	1.00	25.8	7.6	1.99	.85	1.00	1.00	24.6	7.2	2.24	.87	1.00	1.00	23.6	6.9	2.52	.89	1.00	1.00
67°F (19°C)	790	375	26.8	7.9	1.78	.62	.76	.89	26.0	7.6	1.99	.63	.77	.91	24.8	7.3	2.24	.63	.79	.93	23.6	6.9	2.52	.65	.81	.96
	880	415	27.4	8.0	1.79	.64	.78	.93	26.4	7.7	2.00	.64	.80	.95	25.4	7.4	2.25	.65	.82	.97	24.2	7.1	2.53	.67	.84	1.00
	960	455	28.0	8.2	1.79	.65	.81	.96	27.0	7.9	2.01	.66	.82	.98	25.8	7.6	2.25	.67	.84	1.00	24.6	7.2	2.54	.69	.87	1.00
71°F (22°C)	790	375	28.0	8.2	1.79	.47	.61	.73	27.0	7.9	2.01	.48	.61	.75	26.0	7.6	2.26	.47	.62	.76	24.8	7.3	2.54	.48	.64	.78
	880	415	28.6	8.4	1.80	.48	.62	.76	27.6	8.1	2.02	.49	.63	.78	26.6	7.8	2.27	.49	.64	.79	25.4	7.4	2.55	.49	.66	.82
	960	455	29.2	8.6	1.80	.49	.64	.78	28.2	8.3	2.02	.49	.65	.80	27.0	7.9	2.27	.50	.66	.82	25.8	7.6	2.55	.50	.68	.84
HS29-024 - CH33-36A-2F with G60UHV-36A-070 COOLING CAPACITY - TXV Systems Only																										
63°F (17°C)	750	355	25.2	7.4	1.76	.76	.90	1.00	24.2	7.1	1.97	.77	.91	1.00	23.2	6.8	2.22	.79	.94	1.00	22.0	6.4	2.50	.80	.97	1.00
	850	400	25.8	7.6	1.77	.79	.93	1.00	24.8	7.3	1.98	.80	.96	1.00	23.8	7.0	2.23	.82	.98	1.00	22.4	6.6	2.51	.84	1.00	1.00
	950	450	26.4	7.7	1.77	.81	.97	1.00	25.4	7.4	1.99	.83	.99	1.00	24.2	7.1	2.23	.85	1.00	1.00	23.2	6.8	2.52	.87	1.00	1.00
67°F (19°C)	750	355	26.8	7.9	1.78	.60	.73	.86	25.8	7.6	1.99	.61	.75	.88	24.6	7.2	2.24	.62	.76	.90	23.4	6.9	2.52	.63	.78	.93
	850	400	27.4	8.0	1.78	.62	.76	.90	26.4	7.7	2.00	.63	.78	.92	25.2	7.4	2.25	.64	.80	.95	24.0	7.0	2.53	.65	.81	.97
	950	450	27.8	8.1	1.79	.64	.79	.94	26.8	7.9	2.01	.65	.81	.96	25.6	7.5	2.25	.66	.82	.98	24.4	7.2	2.53	.67	.85	1.00
71°F (22°C)	750	355	28.0	8.2	1.79	.46	.59	.71	27.2	8.0	2.01	.47	.60	.72	26.0	7.6	2.26	.47	.60	.74	24.8	7.3	2.54	.47	.61	.75
	850	400	28.8	8.4	1.80	.47	.61	.74	27.8	8.1	2.02	.48	.62	.75	26.6	7.8	2.27	.48	.63	.77	25.4	7.4	2.55	.48	.64	.79
	950	450	29.2	8.6	1.81	.48	.62	.77	28.2	8.3	2.02	.48	.63	.78	27.0	7.9	2.27	.49	.65	.80	25.8	7.6	2.55	.49	.66	.83
HS29-024 - CH33-36B-2F with G60UHV-36B-090 COOLING CAPACITY - TXV Systems Only																										
63°F (17°C)	750	355	25.4	7.4	1.76	.77	.91	1.00	24.4	7.2	1.98	.78	.93	1.00	23.4	6.9	2.22	.80	.95	1.00	22.2	6.5	2.50	.82	.98	1.00
	850	400	26.0	7.6	1.77	.80	.95	1.00	25.0	7.3	1.98	.81	.97	1.00	24.0	7.0	2.23	.83	.99	1.00	22.8	6.7	2.51	.86	1.00	1.00
	950	450	26.6	7.8	1.78	.83	.98	1.00	25.6	7.5	1.99	.84	1.00	1.00	24.6	7.2	2.24	.86	1.00	1.00	23.6	6.9	2.52	.89	1.00	1.00
67°F (19°C)	750	355	26.6	7.8	1.77	.61	.75	.88	25.6	7.5	1.99	.62	.76	.89	24.6	7.2	2.24	.63	.77	.92	23.4	6.9	2.52	.64	.79	.94
	850	400	27.4	8.0	1.78	.63	.78	.92	26.4	7.7	2.00	.64	.79	.94	25.2	7.4	2.25	.65	.81	.96	24.0	7.0	2.53	.66	.83	.99
	950	450	27.8	8.1	1.79	.65	.80	.95	26.8	7.9	2.01	.66	.82	.98	25.8	7.6	2.25	.67	.84	1.00	24.4	7.2	2.54	.68	.87	1.00
71°F (22°C)	750	355	27.8	8.1	1.79	.47	.60	.72	26.8	7.9	2.00	.47	.61	.74	25.8	7.6	2.25	.47	.62	.75	24.4	7.2	2.53	.48	.63	.77
	850	400	28.4	8.3	1.80	.48	.62	.75	27.4	8.0	2.01	.48	.63	.77	26.4	7.7	2.26	.48	.64	.79	25.2	7.4	2.54	.49	.65	.81
	950	450	29.0	8.5	1.80	.49	.64	.78	28.0	8.2	2.02	.49	.65	.80	27.0	7.9	2.27	.50	.66	.82	25.6	7.5	2.55	.50	.67	.84
HS29-024 - CH33-36B-2F with G61MPV-36B COOLING CAPACITY - TXV Systems Only																										
63°F (17°C)	845	400	26.0	7.6	1.77	.80	.95	1.00	25.0	7.3	1.98	.81	.97	1.00	24.0	7.0	2.23	.83	.99	1.00	22.8	6.7	2.51	.85	1.00	1.00
	945	445	26.6	7.8	1.78	.82	.98	1.00	25.6	7.5	1.99	.84	1.00	1.00	24.6	7.2	2.24	.86	1.00	1.00	23.6	6.9	2.52	.89	1.00	1.00
	1060	500	27.2	8.0	1.78	.86	1.00	1.00	26.4	7.7	2.00	.88	1.00	1.00	25.4	7.4	2.25	.90	1.00	1.00	24.2	7.1	2.53	.93	1.00	1.00
67°F (19°C)	845	400	27.2	8.0	1.78	.63	.77	.91	26.4	7.7	2.00	.64	.79	.94	25.2	7.4	2.25	.65	.81	.96	24.0	7.0	2.53	.66	.83	.99
	945	445	27.8	8.1	1.79	.65	.80	.95	26.8	7.9	2.01	.66	.82	.97	25.8	7.6	2.25	.67	.84	1.00	24.4	7.2	2.54	.68	.87	1.00
	1060	500	28.4	8.3	1.79	.67	.83	.99	27.4	8.0	2.01	.68	.85	1.00	26.2	7.7	2.26	.69	.88	1.00	24.8	7.3	2.54	.71	.91	1.00
71°F (22°C)	845	400	28.4	8.3	1.80	.48	.62	.75	27.4	8.0	2.01	.48	.63	.77	26.4	7.7	2.26	.48	.64	.78	25.2	7.4	2.54	.49	.65	.80
	945	445	29.0	8.5	1.80	.49	.64	.78	28.0	8.2	2.02	.49	.65	.80	27.0	7.9	2.27	.49	.66	.82	25.6	7.5	2.55	.50	.67	.84
	1060	500	29.6	8.7	1.81	.50	.66	.81	28.6	8.4	2.03	.50	.67	.83	27.4	8.0	2.28	.51	.68	.85	26.2	7.7	2.56	.51	.70	.88
HS29-024 - CH33-42B-2F with G61MPV-36B COOLING CAPACITY - TXV Systems Only																										
63°F (17°C)	845	400	26.4	7.7	1.77	.78	.93	1.00	25.4	7.4	1.99	.80	.95	1.00	24.4	7.2	2.23	.82	.98	1.00	23.0	6.7	2.51	.84	1.00	1.00
	945	445	27.0	7.9	1.78	.81	.97	1.00	26.0	7.6	2.00	.83	.99	1.00	24.8	7.3	2.24	.85	1.00	1.00	23.8	7.0	2.52	.88	1.00	1.00
	1060	500	27.6	8.1	1.79	.84	1.00	1.00	26.8	7.9	2.00	.86	1.00	1.00	25.6	7.5	2.25	.89	1.00	1.00	24.4	7.2	2.53	.92	1.00	1.00
67°F (19°C)	845	400	28.0	8.2	1.79	.62	.76	.90	27.0	7.9	2.01	.63	.77	.92	25.8	7.6	2.26	.64	.79	.94	24.4	7.2	2.53	.65	.81	.97
	945	445	28.6	8.4	1.80	.64	.79	.94	27.4	8.0	2.01	.64	.81	.96	26.2	7.7	2.26	.66	.83	.98	25.0	7.3	2.54	.67	.85	1.00
	1060	500	29.0	8.5	1.80	.65	.82	.98	28.0	8.2	2.02	.67	.84	1.00	26.8	7.9	2.27	.68	.86	1.00	25.4	7.4	2.55	.70	.89	1.00
71°F (22°C)	845	400	29.4	8.6	1.81	.47	.61	.74	28.4	8.3	2.03	.48	.61	.75	27.2	8.0	2.27	.47	.62	.77	26.0	7.6	2.56	.48	.64	.79
	945	445	30.0	8.8	1.81	.48	.63	.76	29.0	8.5	2.03	.48	.63	.78	27.8	8.1	2.28	.49	.65	.78	26.4	7.7	2.56	.49	.66	.83
	1060	500	30.4	8.9	1.82	.49	.64	.80	29.4	8.6	2.04	.49	.66	.82	28.2	8.3	2.29	.50	.67	.84	26.8	7.9	2.57	.51	.69	.87
HS29-024 - CB29M-21/26 - CB28UH-018/024 COOLING CAPACITY - TXV Systems Only																										
63°F (17°C)	650	305	22.6	6.6	1.73	.75	.89	.99	21.8	6.4	1.94	.77	.90	1.00	20.8	6.1	2.19	.78	.92	1.00	19.7	5.8	2.47	.80	.95	1.00
	800	380	23.6	6.9	1.74	.80	.94	1.00	22.8	6.7	1.96	.82	.96	1.00	21.8	6.4	2.20	.84	.98	1.00	20.6	6.0	2.48	.86	1.00	1.00
	950	450	24.4	7.2	1.75	.84	.99	1.00	23.6	6.9	1.96	.86	1.00	1.00	22.6	6.6	2.21	.88	1.00	1.00	21.4	6.3	2.49	.91	1.00	1.00
67°F (19°C)	650	305	23.8	7.0	1.74	.61	.73	.85	23.0	6.7	1.96	.61	.74	.87	22.0	6.4	2.20	.62	.76	.89	20.8	6.1	2.48	.63	.78	.92
	800	380	24.8	7.3	1.76	.64	.78	.91	23.8	7.0	1.97	.64	.79	.93	23.0	6.7	2.22	.65	.81	.95	21.8	6.4	2.50	.67	.83	.98
	950	450	25.6	7.5	1.76	.66	.82	.96	24.6	7.2	1.98	.67	.84	.98	23.6	6.9	2.23	.68	.86	1.00	22.4	6.6	2.50	.70	.88	1.00
71°F (22°C)	650	305	24.8	7.3	1.75	.47	.59	.71	24.0	7.0	1.97	.47	.60	.72	23.0	6.7	2.22	.47	.61	.73	21.8	6.4	2.50	.48	.62	.75
	800	380	26.0	7.6	1.77	.49	.62	.76	25.0	7.3	1.98	.49	.63	.77	24.0	7.0	2.23	.49	.64	.79	22.8	6.7	2.51	.50	.65	.81
	950	450	26.8	7.9	1.78	.50	.65	.80	25.8	7.6	1.99	.50	.66	.82	24.8	7.3	2.24	.51	.67	.84	23.6	6.9	2.52	.51	.69	.86

NOTE - For Temperatures and Capacities not shown in tables, see bulletin - Cooling Unit Rating Table Correction Factor Data in Miscellaneous Engineering Data section.

Entering Wet Bulb Temperature	Total Air Volume		Outdoor Air Temperature Entering Outdoor Coil: 85°F (29°C)						95°F (35°C)						105°F (41°C)						115°F (46°C)					
			Total Cooling Capacity		Comp Motor kW Input	Sensible To Total Ratio (S/T) Dry Bulb			Total Cooling Capacity		Comp Motor kW Input	Sensible To Total Ratio (S/T) Dry Bulb			Total Cooling Capacity		Comp Motor kW Input	Sensible To Total Ratio (S/T) Dry Bulb			Total Cooling Capacity		Comp Motor kW Input	Sensible To Total Ratio (S/T) Dry Bulb		
	cfm	L/s	kBtuh	kW		75°F 24°C	80°F 27°C	85°F 29°C	kBtuh	kW		75°F 24°C	80°F 27°C	85°F 29°C	kBtuh	kW		75°F 24°C	80°F 27°C	85°F 29°C	kBtuh	kW		75°F 24°C	80°F 27°C	85°F 29°C
HS29-024 - CB29M-31 - CB28UH-030 COOLING CAPACITY - TXV Systems Only																										
63°F (17°C)	700	330	24.2	7.1	1.75	.76	.88	.99	23.4	6.9	1.96	.77	.90	1.00	22.4	6.6	2.21	.78	.92	1.00	21.4	6.3	2.49	.80	.95	1.00
	800	380	25.0	7.3	1.76	.78	.92	1.00	24.0	7.0	1.97	.80	.94	1.00	23.2	6.8	2.22	.81	.95	1.00	22.0	6.4	2.50	.83	.98	1.00
	900	425	25.6	7.5	1.76	.80	.95	1.00	24.6	7.2	1.98	.82	.96	1.00	23.8	7.0	2.23	.84	.98	1.00	22.6	6.6	2.51	.87	1.00	1.00
67°F (19°C)	700	330	25.4	7.4	1.76	.61	.73	.85	24.6	7.2	1.98	.62	.74	.87	23.6	6.9	2.23	.63	.76	.89	22.4	6.6	2.51	.64	.78	.92
	800	380	26.2	7.7	1.77	.63	.76	.88	25.4	7.4	1.99	.63	.77	.90	24.4	7.2	2.24	.64	.79	.93	23.2	6.8	2.52	.66	.81	.95
	900	425	26.8	7.9	1.78	.64	.78	.92	25.8	7.6	1.99	.65	.80	.94	24.8	7.3	2.24	.66	.82	.96	23.6	6.9	2.52	.68	.84	.98
71°F (22°C)	700	330	26.4	7.7	1.77	.48	.60	.71	25.6	7.5	1.99	.47	.60	.72	24.8	7.3	2.24	.48	.61	.74	23.6	6.9	2.52	.49	.62	.75
	800	380	27.2	8.0	1.78	.48	.61	.73	26.4	7.7	2.00	.49	.62	.75	25.4	7.4	2.25	.49	.63	.76	24.2	7.1	2.53	.50	.64	.79
	900	425	27.8	8.1	1.79	.49	.63	.76	27.0	7.9	2.01	.50	.64	.77	26.0	7.6	2.26	.50	.65	.79	24.8	7.3	2.54	.50	.66	.82
HS29-024 - CB30M-21/26 - CB30U-21/26 COOLING CAPACITY - TXV Systems Only																										
63°F (17°C)	700	330	25.2	7.4	1.76	.76	.89	1.00	24.2	7.1	1.97	.77	.91	1.00	23.0	6.7	2.22	.79	.94	1.00	21.8	6.4	2.50	.81	.96	1.00
	800	380	25.8	7.6	1.77	.79	.93	1.00	24.8	7.3	1.98	.80	.96	1.00	23.6	6.9	2.23	.82	.98	1.00	22.4	6.6	2.51	.84	1.00	1.00
	900	425	26.4	7.7	1.77	.82	.97	1.00	25.4	7.4	1.99	.83	.99	1.00	24.4	7.2	2.23	.86	1.00	1.00	23.2	6.8	2.52	.88	1.00	1.00
67°F (19°C)	700	330	26.6	7.8	1.77	.60	.73	.86	25.6	7.5	1.99	.61	.75	.88	24.4	7.2	2.24	.62	.76	.90	23.2	6.8	2.51	.63	.78	.93
	800	380	27.2	8.0	1.78	.63	.76	.90	26.2	7.7	2.00	.63	.78	.92	25.0	7.3	2.24	.64	.80	.95	23.8	7.0	2.52	.65	.82	.97
	900	425	27.8	8.1	1.79	.65	.80	.94	26.8	7.9	2.00	.65	.81	.96	25.6	7.5	2.25	.66	.83	.98	24.2	7.1	2.53	.68	.86	1.00
71°F (22°C)	700	330	28.0	8.2	1.79	.47	.59	.71	27.0	7.9	2.01	.47	.60	.72	25.8	7.6	2.25	.47	.60	.74	24.4	7.2	2.53	.48	.62	.75
	800	380	28.6	8.4	1.80	.48	.61	.74	27.6	8.1	2.02	.48	.62	.75	26.4	7.7	2.26	.48	.63	.77	25.2	7.4	2.54	.49	.64	.79
	900	425	29.2	8.6	1.81	.49	.63	.77	28.2	8.3	2.02	.49	.64	.79	27.0	7.9	2.27	.49	.65	.81	25.8	7.6	2.55	.50	.67	.83
HS29-024 - CB30M-31 - CB30U-31 COOLING CAPACITY - TXV Systems Only																										
63°F (17°C)	600	285	24.4	7.2	1.75	.73	.85	.97	23.6	6.9	1.97	.74	.87	.99	22.4	6.6	2.21	.75	.89	1.00	21.2	6.2	2.49	.77	.92	1.00
	800	380	26.0	7.6	1.77	.79	.94	1.00	25.0	7.3	1.98	.80	.96	1.00	23.8	7.0	2.23	.82	.98	1.00	22.6	6.6	2.51	.85	1.00	1.00
	1000	470	27.2	8.0	1.78	.85	1.00	1.00	26.2	7.7	2.00	.87	1.00	1.00	25.2	7.4	2.25	.90	1.00	1.00	24.0	7.0	2.53	.92	1.00	1.00
67°F (19°C)	600	285	25.8	7.6	1.77	.59	.71	.82	25.0	7.3	1.98	.59	.71	.84	23.8	7.0	2.23	.60	.73	.85	22.6	6.6	2.51	.61	.74	.88
	800	380	27.6	8.1	1.79	.62	.77	.91	26.4	7.7	2.00	.63	.78	.93	25.2	7.4	2.25	.64	.80	.96	24.0	7.0	2.53	.65	.82	.98
	1000	470	28.6	8.4	1.80	.67	.83	.98	27.4	8.0	2.01	.67	.85	.99	26.2	7.7	2.26	.68	.87	1.00	24.8	7.3	2.54	.70	.90	1.00
71°F (22°C)	600	285	27.2	8.0	1.78	.46	.57	.68	26.2	7.7	2.00	.46	.58	.69	25.2	7.4	2.25	.46	.58	.70	23.8	7.0	2.53	.46	.59	.72
	800	380	28.8	8.4	1.80	.48	.61	.75	27.8	8.1	2.02	.48	.62	.76	26.6	7.8	2.27	.48	.63	.78	25.4	7.4	2.55	.48	.64	.80
	1000	470	30.0	8.8	1.81	.49	.66	.81	28.8	8.4	2.03	.50	.66	.82	27.6	8.1	2.28	.50	.68	.85	26.2	7.7	2.56	.51	.69	.87
HS29-024 - CVP10-26/EC10Q3 COOLING CAPACITY - TXV Systems Only																										
63°F (17°C)	650	305	23.6	6.9	1.74	.75	.88	.99	22.6	6.6	1.96	.76	.90	1.00	21.6	6.3	2.20	.78	.92	1.00	20.6	6.0	2.48	.79	.94	1.00
	800	380	24.6	7.2	1.75	.79	.94	1.00	23.6	6.9	1.97	.81	.96	1.00	22.6	6.6	2.21	.83	.98	1.00	21.4	6.3	2.49	.85	.99	1.00
	950	450	25.4	7.4	1.76	.84	.99	1.00	24.6	7.2	1.98	.86	1.00	1.00	23.6	6.9	2.23	.88	1.00	1.00	22.6	6.6	2.51	.90	1.00	1.00
67°F (19°C)	650	305	25.0	7.3	1.76	.60	.72	.84	24.2	7.1	1.97	.60	.73	.86	23.2	6.8	2.22	.61	.75	.88	22.0	6.4	2.50	.62	.77	.91
	800	380	26.0	7.6	1.77	.63	.77	.91	25.2	7.4	1.98	.64	.78	.93	24.0	7.0	2.23	.64	.80	.95	22.8	6.7	2.51	.66	.83	.97
	950	450	26.8	7.9	1.78	.66	.81	.96	25.8	7.6	1.99	.67	.83	.98	24.8	7.3	2.24	.68	.85	.99	23.4	6.9	2.52	.70	.88	1.00
71°F (22°C)	650	305	26.6	7.8	1.77	.46	.58	.70	25.6	7.5	1.99	.46	.59	.71	24.6	7.2	2.24	.47	.60	.72	23.4	6.9	2.52	.47	.61	.74
	800	380	27.6	8.1	1.79	.48	.61	.74	26.6	7.8	2.00	.48	.62	.76	25.6	7.5	2.25	.48	.63	.78	24.2	7.1	2.53	.49	.65	.80
	950	450	28.4	8.3	1.79	.49	.64	.79	27.4	8.0	2.01	.50	.65	.81	26.2	7.7	2.26	.50	.67	.83	25.0	7.3	2.54	.51	.68	.85
HS29-024 - C33-24A/B COOLING CAPACITY - RFC Systems Only																										
63°F (17°C)	650	305	24.0	7.0	1.75	.74	.87	.98	23.2	6.8	1.96	.75	.88	1.00	22.2	6.5	2.21	.77	.90	1.00	21.2	6.2	2.49	.78	.93	1.00
	800	380	25.0	7.3	1.76	.78	.92	1.00	24.2	7.1	1.97	.79	.94	1.00	23.2	6.8	2.22	.81	.97	1.00	22.0	6.4	2.50	.83	.99	1.00
	950	450	26.0	7.6	1.77	.82	.97	1.00	25.0	7.3	1.98	.84	.99	1.00	24.0	7.0	2.23	.86	1.00	1.00	23.0	6.7	2.51	.88	1.00	1.00
67°F (19°C)	650	305	25.2	7.4	1.76	.60	.72	.83	24.4	7.2	1.98	.61	.73	.85	23.4	6.9	2.22	.61	.74	.87	22.2	6.5	2.50	.62	.76	.89
	800	380	26.4	7.7	1.77	.62	.76	.89	25.4	7.4	1.99	.63	.77	.91	24.4	7.2	2.24	.64	.79	.93	23.4	6.9	2.52	.65	.81	.96
	950	450	27.2	8.0	1.78	.65	.79	.94	26.2	7.7	2.00	.66	.81	.96	25.2	7.4	2.25	.67	.83	.98	24.0	7.0	2.53	.68	.86	1.00
71°F (22°C)	650	305	26.2	7.7	1.77	.47	.59	.70	25.4	7.4	1.99	.47	.59	.71	24.4	7.2	2.24	.47	.60	.72	23.4	6.9	2.52	.47	.61	.73
	800	380	27.4	8.0	1.78	.48	.61	.73	26.6	7.8	2.00	.48	.62	.75	25.6	7.5	2.25	.49	.63	.76	24.4	7.2	2.53	.49	.64	.78
	950	450	28.4	8.3	1.80	.49	.63	.77	27.4	8.0	2.01	.50	.64	.79	26.4	7.7	2.26	.50	.66	.81	25.2	7.4	2.54	.51	.67	.83
HS29-024 - C33-30A/B COOLING CAPACITY - RFC Systems Only																										
63°F (17°C)	650	305	24.4	7.2	1.75	.75	.87	.99	23.6	6.9	1.97	.76	.89	1.00	22.6	6.6	2.21	.77	.91	1.00	21.4	6.3	2.49	.79	.94	1.00
	800	380	25.6	7.5	1.76	.79	.93	1.00	24.6	7.2	1.98	.80	.95	1.00	23.6	6.9	2.22	.82	.98	1.00	22.4	6.6	2.50	.84	1.00	1.00
	950	450	26.4	7.7	1.77	.83	.98	1.00	25.6	7.5	1.99	.85	1.00	1.00	24.4	7.2	2.24	.87	1.00	1.00	23.4	6.9	2.52	.89	1.00	1.00
67°F (19°C)	650	305	25.6	7.5	1.76	.60	.72	.84	24.8	7.3	1.98	.61	.73	.86	23.8	7.0	2.23	.61	.75	.87	22.6	6.6	2.51	.62	.76	.90
	800	380	26.8	7.9	1.78	.63	.76	.90	25.8	7.6	1.99	.64	.78	.92	24.8	7.3	2.24	.65	.80	.94	23.6	6.9	2.52	.66	.82	.97
	950	450	27.6	8.1	1.79	.65	.80	.95	26.6	7.8	2.00	.66	.82	.97	25.6	7.5	2.25	.68	.84	.99	24.4	7.2	2.53	.69	.87	1.00
71°F (22°C)	650	305	26.6	7.8	1.77	.47	.59	.70	25.8	7.6	1.99	.47	.59	.71	24.8	7.3	2.24	.47	.60	.72	23.6	6.9	2.52	.47	.61	.74
	800	380	28.0	8.2	1.79	.48	.61	.74	27.0	7.9	2.01	.49	.62	.76	26.0	7.6	2.26	.49	.63	.77	24.8	7.3	2.54	.49	.65	.79
	950	450	28.8	8.4	1.80	.49	.64	.78	28.0	8.2	2.02	.50	.65	.80	26.8	7.9	2.27	.50	.66	.82	25.6	7.5	2.55	.51	.68	.84
HS29-024 - CR26-18N-F COOLING CAPACITY - RFC Systems Only																										
63°F (17°C)	650	305	22.4	6.6	1.73	.75	.88	.98	21.4	6.3	1.94	.76	.90	.99	20.6	6.0	2.18	.78	.91	1.00	19.4	5.7	2.46	.79	.94	1.00
	800	380	23.4	6.9	1.74	.79	.93	1.00	22.4	6.6	1.95	.80	.95	1.00	21.4	6.3	2.20	.82	.97	1.00	20.2	5.9	2.48	.85	.98	1.00
	950	450	24.0	7.0	1.75	.83	.97	1.00	23.2	6.8	1.96	.85	.98	1.00	22.2	6.5	2.21	.87	.99	1.00	21.0	6.2	2.49	.89	1.00	1.00
67°F (19°C)	650	305	23.4	6.9	1.74	.60	.73	.84	22.6	6.6	1.95	.61	.74	.86	21.6	6.3	2.20	.62	.75	.88	20.4	6.0	2.48	.63	.77	.90
	800	380	24.6	7.2	1.75	.63	.77	.90	23.6	6.9	1.97	.64	.78	.92	22.6	6.6	2.21	.64	.80	.94	21.4	6.3	2.49	.66	.82	.96
	950	450	25.2	7.4	1.76	.65	.81	.94	24.4	7.2	1.98	.66	.82	.96	23.2	6.8	2.22	.67	.84	.97	22.2	6.5	2.50	.69	.87	.99
71°F (22°C)	650	305	24.4	7.2	1.75	.46	.59	.70	23.6	6.9	1.97	.47	.59	.71	22.6	6.6	2.21	.47	.60	.73	21.6	6.3	2.49	.48	.61	.74
	800	380	25.6	7.5	1.76	.48	.62	.75	24.8	7.3	1.98	.48	.62	.76	23.8	7.0	2.23	.49	.63	.77	22.6	6.6	2.51	.49	.65	.79
	950	450	26.6	7.8	1.77	.50	.64	.78	25.4	7.4	1.99	.50	.65	.80	24.4	7.2	2.24	.50	.66	.82	23.2	6.8	2.52	.51	.68	.84

NOTE - For Temperatures and Capacities not shown in tables, see bulletin - Cooling Unit Rating Table Correction Factor Data in Miscellaneous Engineering Data section.

Entering Wet Bulb Temperature	Total Air Volume		Outdoor Air Temperature Entering Outdoor Coil																							
			85°F (29°C)						95°F (35°C)						105°F (41°C)						115°F (46°C)					
			Total Cooling Capacity		Comp Motor kW Input	Sensible To Total Ratio (S/T) Dry Bulb			Total Cooling Capacity		Comp Motor kW Input	Sensible To Total Ratio (S/T) Dry Bulb			Total Cooling Capacity		Comp Motor kW Input	Sensible To Total Ratio (S/T) Dry Bulb			Total Cooling Capacity		Comp Motor kW Input	Sensible To Total Ratio (S/T) Dry Bulb		
	cfm	L/s	kBtuh	kW		75°F 24°C	80°F 27°C	85°F 29°C	kBtuh	kW		75°F 24°C	80°F 27°C	85°F 29°C	kBtuh	kW		75°F 24°C	80°F 27°C	85°F 29°C	kBtuh	kW		75°F 24°C	80°F 27°C	85°F 29°C
HS29-024 - CR26-30N-F COOLING CAPACITY - RFC Systems Only																										
63°F (17°C)	650	305	24.4	7.2	1.75	.74	.87	.98	23.6	6.9	1.97	.75	.89	1.00	22.6	6.6	2.21	.77	.91	1.00	21.4	6.3	2.49	.79	.93	1.00
	800	380	25.6	7.5	1.76	.79	.93	1.00	24.6	7.2	1.98	.80	.95	1.00	23.6	6.9	2.22	.82	.97	1.00	22.4	6.6	2.51	.84	.99	1.00
	950	450	26.4	7.7	1.77	.83	.97	1.00	25.6	7.5	1.99	.85	.99	1.00	24.4	7.2	2.24	.87	1.00	1.00	23.4	6.9	2.52	.89	1.00	1.00
67°F (19°C)	650	305	25.8	7.6	1.77	.60	.72	.84	25.0	7.3	1.98	.60	.73	.85	24.0	7.0	2.23	.61	.74	.87	22.8	6.7	2.51	.62	.76	.90
	800	380	27.0	7.9	1.78	.62	.76	.89	26.0	7.6	2.00	.63	.78	.91	24.8	7.3	2.24	.64	.79	.94	23.6	6.9	2.52	.66	.82	.96
	950	450	27.6	8.1	1.79	.65	.81	.94	26.6	7.8	2.00	.66	.82	.97	25.6	7.5	2.25	.68	.84	.99	24.4	7.2	2.53	.69	.87	1.00
71°F (22°C)	650	305	27.2	8.0	1.78	.47	.58	.70	26.2	7.7	2.00	.47	.59	.71	25.2	7.4	2.25	.47	.60	.72	24.0	7.0	2.53	.47	.61	.74
	800	380	28.2	8.3	1.79	.48	.61	.74	27.2	8.0	2.01	.48	.62	.75	26.2	7.7	2.26	.49	.63	.77	25.0	7.3	2.54	.49	.64	.79
	950	450	29.0	8.5	1.80	.50	.64	.78	28.0	8.2	2.02	.50	.65	.80	27.0	7.9	2.27	.50	.66	.82	25.6	7.5	2.55	.51	.68	.84
HS29-024 - CH23-31 COOLING CAPACITY - RFC Systems Only																										
63°F (17°C)	650	305	23.2	6.8	1.74	.74	.85	.97	22.6	6.6	1.95	.75	.87	.98	21.6	6.3	2.20	.76	.89	1.00	20.6	6.0	2.48	.78	.91	1.00
	800	380	24.2	7.1	1.75	.77	.90	1.00	23.4	6.9	1.96	.78	.92	1.00	22.6	6.6	2.21	.80	.95	1.00	21.6	6.3	2.49	.82	.98	1.00
	950	450	25.2	7.4	1.76	.80	.95	1.00	24.4	7.2	1.97	.82	.97	1.00	23.6	6.9	2.22	.84	.99	1.00	22.6	6.6	2.51	.87	1.00	1.00
67°F (19°C)	650	305	24.6	7.2	1.75	.60	.71	.82	23.8	7.0	1.97	.61	.72	.84	23.0	6.7	2.22	.61	.74	.86	21.8	6.4	2.50	.62	.75	.88
	800	380	25.8	7.6	1.77	.62	.75	.87	24.8	7.3	1.98	.63	.76	.89	24.0	7.0	2.23	.64	.78	.91	22.8	6.7	2.51	.65	.80	.94
	950	450	26.6	7.8	1.77	.64	.78	.92	25.8	7.6	1.99	.65	.80	.94	24.6	7.2	2.24	.66	.82	.97	23.4	6.9	2.52	.68	.84	.99
71°F (22°C)	650	305	25.8	7.6	1.77	.47	.59	.69	25.0	7.3	1.98	.46	.59	.70	24.0	7.0	2.23	.47	.60	.71	23.0	6.7	2.51	.47	.60	.73
	800	380	27.2	8.0	1.78	.48	.61	.72	26.2	7.7	2.00	.48	.62	.74	25.2	7.4	2.24	.48	.62	.75	24.0	7.0	2.53	.49	.63	.77
	950	450	28.0	8.2	1.79	.49	.63	.76	27.2	8.0	2.01	.50	.64	.77	26.0	7.6	2.26	.50	.65	.79	24.8	7.3	2.54	.50	.66	.82
HS29-024 - CH33-24/30A-2F COOLING CAPACITY - RFC Systems Only																										
63°F (17°C)	650	305	24.2	7.1	1.75	.74	.87	.98	23.4	6.9	1.96	.75	.88	1.00	22.4	6.6	2.21	.77	.90	1.00	21.4	6.3	2.49	.79	.93	1.00
	800	380	25.4	7.4	1.76	.78	.92	1.00	24.4	7.2	1.98	.80	.94	1.00	23.4	6.9	2.22	.81	.97	1.00	22.2	6.5	2.50	.84	1.00	1.00
	950	450	26.2	7.7	1.77	.82	.97	1.00	25.2	7.4	1.99	.84	.99	1.00	24.2	7.1	2.23	.86	1.00	1.00	23.2	6.8	2.52	.89	1.00	1.00
67°F (19°C)	650	305	25.4	7.4	1.76	.60	.72	.83	24.6	7.2	1.98	.60	.73	.85	23.6	6.9	2.23	.61	.74	.87	22.4	6.6	2.51	.62	.76	.89
	800	380	26.6	7.8	1.77	.62	.76	.89	25.8	7.6	1.99	.63	.77	.91	24.6	7.2	2.24	.64	.79	.93	23.6	6.9	2.52	.65	.81	.96
	950	450	27.4	8.0	1.79	.65	.80	.94	26.4	7.7	2.00	.66	.81	.97	25.4	7.4	2.25	.67	.83	.99	24.2	7.1	2.53	.68	.86	1.00
71°F (22°C)	650	305	26.4	7.7	1.77	.47	.58	.70	25.6	7.5	1.99	.47	.59	.71	24.6	7.2	2.24	.47	.60	.72	23.6	6.9	2.52	.47	.61	.73
	800	380	27.8	8.1	1.79	.48	.61	.74	26.8	7.9	2.01	.48	.62	.75	25.8	7.6	2.26	.48	.63	.77	24.6	7.2	2.54	.49	.64	.79
	950	450	28.6	8.4	1.80	.49	.64	.78	27.6	8.1	2.02	.50	.65	.79	26.6	7.8	2.27	.50	.66	.81	25.4	7.4	2.55	.51	.67	.84
HS29-024 - CH33-36A/B/C-2F COOLING CAPACITY - RFC Systems Only																										
63°F (17°C)	650	305	24.6	7.2	1.75	.74	.86	.98	23.6	6.9	1.97	.75	.88	1.00	22.6	6.6	2.21	.76	.90	1.00	21.4	6.3	2.49	.78	.92	1.00
	800	380	25.6	7.5	1.76	.78	.92	1.00	24.6	7.2	1.98	.79	.94	1.00	23.6	6.9	2.22	.81	.97	1.00	22.2	6.5	2.50	.83	1.00	1.00
	950	450	26.4	7.7	1.77	.82	.97	1.00	25.4	7.4	1.99	.83	.99	1.00	24.4	7.2	2.24	.86	1.00	1.00	23.2	6.8	2.52	.88	1.00	1.00
67°F (19°C)	650	305	26.0	7.6	1.77	.59	.71	.83	25.0	7.3	1.98	.60	.72	.84	24.0	7.0	2.23	.61	.73	.86	22.8	6.7	2.51	.61	.75	.89
	800	380	27.2	8.0	1.78	.62	.75	.89	26.2	7.7	2.00	.63	.77	.91	25.0	7.3	2.25	.64	.79	.93	23.8	7.0	2.52	.65	.80	.96
	950	450	28.0	8.2	1.79	.64	.80	.94	26.8	7.9	2.01	.65	.82	.96	25.8	7.6	2.25	.66	.83	.99	24.4	7.2	2.54	.68	.86	1.00
71°F (22°C)	650	305	27.4	8.0	1.78	.47	.58	.69	26.4	7.7	2.00	.47	.58	.70	25.4	7.4	2.25	.47	.59	.71	24.2	7.1	2.53	.47	.60	.73
	800	380	28.6	8.4	1.80	.48	.60	.73	27.6	8.1	2.01	.48	.61	.74	26.4	7.7	2.26	.48	.62	.76	25.2	7.4	2.54	.48	.63	.78
	950	450	29.4	8.6	1.81	.49	.63	.77	28.4	8.3	2.02	.49	.64	.79	27.2	8.0	2.27	.50	.65	.81	25.8	7.6	2.55	.50	.67	.83
HS29-024 - CH23-41 COOLING CAPACITY - RFC Systems Only																										
63°F (17°C)	650	305	24.6	7.2	1.75	.74	.86	.97	23.8	7.0	1.97	.75	.88	.99	22.6	6.6	2.21	.76	.90	1.00	21.4	6.3	2.49	.78	.92	1.00
	800	380	25.8	7.6	1.76	.77	.92	1.00	24.8	7.3	1.98	.79	.94	1.00	23.8	7.0	2.23	.81	.96	1.00	22.6	6.6	2.51	.83	.99	1.00
	950	450	26.6	7.8	1.77	.81	.97	1.00	25.6	7.5	1.99	.83	.99	1.00	24.8	7.3	2.24	.86	1.00	1.00	23.6	6.9	2.52	.88	1.00	1.00
67°F (19°C)	650	305	26.0	7.6	1.77	.59	.71	.82	25.2	7.4	1.98	.60	.72	.84	24.2	7.1	2.23	.61	.74	.86	23.0	6.7	2.51	.62	.75	.89
	800	380	27.2	8.0	1.78	.62	.75	.88	26.2	7.7	2.00	.63	.77	.90	25.2	7.4	2.25	.64	.78	.93	24.0	7.0	2.53	.65	.81	.95
	950	450	28.2	8.3	1.79	.64	.79	.94	27.2	8.0	2.01	.65	.81	.96	26.0	7.6	2.26	.66	.83	.98	24.6	7.2	2.54	.68	.86	1.00
71°F (22°C)	650	305	27.4	8.0	1.79	.46	.58	.69	26.6	7.8	2.00	.47	.58	.70	25.4	7.4	2.25	.47	.59	.71	24.4	7.2	2.53	.47	.60	.73
	800	380	28.8	8.4	1.80	.48	.61	.73	27.8	8.1	2.02	.48	.61	.74	26.6	7.8	2.26	.48	.62	.76	25.4	7.4	2.55	.49	.64	.78
	950	450	29.6	8.7	1.81	.48	.63	.77	28.6	8.4	2.03	.49	.64	.78	27.4	8.0	2.28	.50	.65	.81	26.2	7.7	2.56	.51	.67	.83

NOTE - For Temperatures and Capacities not shown in tables, see bulletin - Cooling Unit Rating Table Correction Factor Data in Miscellaneous Engineering Data section.

Entering Wet Bulb Temperature	Total Air Volume		Outdoor Air Temperature Entering Outdoor Coil: 85°F (29°C)						95°F (35°C)						105°F (41°C)						115°F (46°C)					
			Total Cooling Capacity		Comp Motor kW Input	Sensible To Total Ratio (S/T) Dry Bulb			Total Cooling Capacity		Comp Motor kW Input	Sensible To Total Ratio (S/T) Dry Bulb			Total Cooling Capacity		Comp Motor kW Input	Sensible To Total Ratio (S/T) Dry Bulb			Total Cooling Capacity		Comp Motor kW Input	Sensible To Total Ratio (S/T) Dry Bulb		
	cfm	L/s	kBtuh	kW		75°F 24°C	80°F 27°C	85°F 29°C	kBtuh	kW		75°F 24°C	80°F 27°C	85°F 29°C	kBtuh	kW		75°F 24°C	80°F 27°C	85°F 29°C	kBtuh	kW		75°F 24°C	80°F 27°C	85°F 29°C
HS29-030 - C33-30A/B COOLING CAPACITY - TXV Systems Only																										
63°F (17°C)	900	425	29.8	8.7	2.41	.76	.89	1.00	28.6	8.4	2.67	.77	.91	1.00	27.6	8.1	2.97	.78	.93	1.00	26.2	7.7	3.30	.80	.95	1.00
	1000	470	30.4	8.9	2.42	.78	.92	1.00	29.4	8.6	2.69	.79	.94	1.00	28.0	8.2	2.98	.81	.96	1.00	26.8	7.9	3.32	.83	.98	1.00
	1100	520	31.0	9.1	2.43	.80	.95	1.00	29.8	8.7	2.69	.81	.97	1.00	28.6	8.4	2.99	.83	.99	1.00	27.2	8.0	3.33	.85	1.00	1.00
67°F (19°C)	900	425	31.2	9.1	2.44	.61	.74	.86	30.2	8.9	2.70	.62	.75	.87	29.0	8.5	3.00	.62	.76	.89	27.6	8.1	3.34	.63	.78	.92
	1000	470	32.0	9.4	2.45	.62	.76	.89	30.8	9.0	2.72	.63	.77	.90	29.6	8.7	3.02	.64	.78	.93	28.2	8.3	3.35	.65	.80	.95
	1100	520	32.6	9.6	2.47	.64	.78	.91	31.4	9.2	2.73	.64	.79	.94	30.2	8.9	3.03	.65	.81	.96	28.8	8.4	3.37	.67	.83	.99
71°F (22°C)	900	425	32.6	9.6	2.47	.47	.60	.71	31.4	9.2	2.73	.48	.60	.72	30.2	8.9	3.04	.48	.61	.74	29.0	8.5	3.38	.48	.62	.75
	1000	470	33.2	9.7	2.48	.48	.61	.73	32.2	9.4	2.75	.48	.62	.75	31.0	9.1	3.06	.48	.63	.76	29.6	8.7	3.39	.49	.64	.78
	1100	520	34.0	10.0	2.50	.49	.62	.75	32.8	9.6	2.77	.49	.63	.77	31.4	9.2	3.07	.49	.64	.79	30.0	8.8	3.41	.50	.65	.81
HS29-030 - C33-36A/B/C COOLING CAPACITY - TXV Systems Only																										
63°F (17°C)	900	425	30.0	8.8	2.41	.76	.90	1.00	28.8	8.4	2.67	.78	.92	1.00	27.6	8.1	2.97	.79	.94	1.00	26.2	7.7	3.30	.81	.96	1.00
	1000	470	30.6	9.0	2.43	.79	.93	1.00	29.6	8.7	2.69	.80	.95	1.00	28.2	8.3	2.99	.82	.97	1.00	27.0	7.9	3.32	.84	.99	1.00
	1100	520	31.2	9.1	2.44	.81	.96	1.00	30.0	8.8	2.70	.82	.98	1.00	28.8	8.4	3.00	.84	.99	1.00	27.6	8.1	3.34	.86	1.00	1.00
67°F (19°C)	900	425	31.4	9.2	2.44	.61	.74	.86	30.4	8.9	2.71	.62	.75	.88	29.2	8.6	3.01	.63	.77	.90	27.8	8.1	3.34	.64	.78	.93
	1000	470	32.2	9.4	2.46	.63	.76	.90	31.0	9.1	2.73	.63	.78	.91	29.8	8.7	3.02	.64	.79	.94	28.4	8.3	3.36	.66	.81	.96
	1100	520	32.8	9.6	2.48	.64	.78	.93	31.6	9.3	2.74	.65	.80	.95	30.4	8.9	3.04	.66	.82	.97	28.8	8.4	3.37	.67	.84	.99
71°F (22°C)	900	425	32.8	9.6	2.48	.47	.60	.72	31.8	9.3	2.74	.48	.61	.73	30.4	8.9	3.04	.48	.62	.74	29.0	8.5	3.38	.49	.63	.76
	1000	470	33.6	9.8	2.49	.48	.61	.74	32.6	9.6	2.76	.48	.62	.75	31.2	9.1	3.06	.49	.63	.77	29.8	8.7	3.40	.49	.64	.79
	1100	520	34.4	10.1	2.51	.49	.63	.76	33.2	9.7	2.78	.49	.64	.78	31.8	9.3	3.07	.50	.65	.80	30.4	8.9	3.41	.50	.66	.82
HS29-030 - C33-38A/B COOLING CAPACITY - TXV Systems Only																										
63°F (17°C)	900	425	31.0	9.1	2.44	.76	.89	1.00	29.8	8.7	2.70	.77	.91	1.00	28.6	8.4	3.00	.78	.93	1.00	27.2	8.0	3.33	.80	.95	1.00
	1000	470	31.8	9.3	2.45	.78	.92	1.00	30.6	9.0	2.71	.80	.94	1.00	29.2	8.6	3.01	.81	.97	1.00	27.8	8.1	3.34	.83	.99	1.00
	1100	520	32.4	9.5	2.46	.81	.96	1.00	31.2	9.1	2.73	.82	.98	1.00	29.8	8.7	3.03	.84	1.00	1.00	28.6	8.4	3.36	.86	1.00	1.00
67°F (19°C)	900	425	33.0	9.7	2.48	.61	.74	.86	31.8	9.3	2.74	.61	.75	.87	30.4	8.9	3.04	.62	.76	.90	29.0	8.5	3.37	.63	.78	.92
	1000	470	33.6	9.8	2.49	.62	.76	.89	32.4	9.5	2.76	.63	.77	.91	31.0	9.1	3.06	.64	.79	.93	29.6	8.7	3.39	.65	.81	.96
	1100	520	34.2	10.0	2.51	.63	.78	.92	33.0	9.7	2.77	.64	.80	.94	31.6	9.3	3.07	.65	.82	.97	30.0	8.8	3.40	.67	.83	.99
71°F (22°C)	900	425	34.6	10.1	2.52	.47	.59	.71	33.4	9.8	2.78	.47	.60	.72	32.0	9.4	3.08	.47	.61	.74	30.6	9.0	3.42	.48	.62	.75
	1000	470	35.4	10.4	2.53	.48	.60	.74	34.0	10.0	2.80	.48	.61	.75	32.8	9.6	3.10	.48	.63	.76	31.2	9.1	3.44	.48	.63	.78
	1100	520	36.0	10.6	2.55	.48	.62	.76	34.8	10.2	2.82	.49	.63	.77	33.2	9.7	3.12	.49	.64	.79	31.8	9.3	3.45	.49	.66	.81
HS29-030 - C33-30A/B with G60UHV-36A/B COOLING CAPACITY - TXV Systems Only																										
63°F (17°C)	860	405	29.4	8.6	2.39	.74	.87	.99	28.2	8.3	2.66	.75	.89	1.00	27.2	8.0	2.96	.77	.91	1.00	25.8	7.6	3.29	.78	.93	1.00
	955	450	30.0	8.8	2.41	.76	.90	1.00	29.0	8.5	2.68	.78	.92	1.00	27.8	8.1	2.97	.79	.94	1.00	26.4	7.7	3.30	.81	.96	1.00
	1050	495	30.6	9.0	2.42	.78	.93	1.00	29.4	8.6	2.69	.80	.95	1.00	28.2	8.3	2.99	.81	.97	1.00	27.0	7.9	3.32	.83	.99	1.00
67°F (19°C)	860	405	30.8	9.0	2.43	.60	.72	.84	29.8	8.7	2.69	.60	.73	.85	28.6	8.4	2.99	.61	.74	.87	27.2	8.0	3.33	.62	.76	.89
	955	450	31.4	9.2	2.44	.61	.74	.87	30.4	8.9	2.71	.62	.75	.88	29.2	8.6	3.01	.62	.77	.91	28.0	8.2	3.34	.63	.78	.93
	1050	495	32.2	9.4	2.46	.62	.76	.89	31.0	9.1	2.72	.63	.77	.91	29.8	8.7	3.02	.64	.79	.94	28.4	8.3	3.36	.65	.81	.96
71°F (22°C)	860	405	32.0	9.4	2.46	.46	.58	.70	31.0	9.1	2.73	.46	.59	.71	29.8	8.7	3.03	.47	.60	.72	28.6	8.4	3.36	.47	.61	.74
	955	450	32.8	9.6	2.47	.47	.60	.72	31.8	9.3	2.74	.47	.60	.73	30.6	9.0	3.04	.47	.61	.74	29.2	8.6	3.38	.48	.62	.76
	1050	495	33.4	9.8	2.49	.47	.61	.74	32.4	9.5	2.76	.48	.62	.75	31.2	9.1	3.06	.48	.63	.77	29.8	8.7	3.39	.48	.64	.78
HS29-030 - C33-36A/B with G60UHV-36A/B COOLING CAPACITY - TXV Systems Only																										
63°F (17°C)	860	405	29.6	8.7	2.40	.75	.88	1.00	28.4	8.3	2.66	.76	.90	1.00	27.2	8.0	2.96	.77	.92	1.00	26.0	7.6	3.29	.79	.94	1.00
	955	450	30.2	8.9	2.42	.77	.91	1.00	29.0	8.5	2.68	.78	.93	1.00	27.8	8.1	2.97	.80	.95	1.00	26.6	7.8	3.31	.82	.97	1.00
	1050	495	30.8	9.0	2.43	.79	.94	1.00	29.6	8.7	2.69	.80	.96	1.00	28.4	8.3	2.99	.82	.98	1.00	27.0	7.9	3.32	.84	1.00	1.00
67°F (19°C)	860	405	31.0	9.1	2.43	.60	.73	.85	30.0	8.8	2.70	.61	.74	.86	28.8	8.4	3.00	.62	.75	.88	27.4	8.0	3.33	.63	.77	.90
	955	450	31.8	9.3	2.45	.61	.75	.88	30.6	9.0	2.72	.62	.76	.89	29.4	8.6	3.01	.63	.77	.92	28.0	8.2	3.35	.64	.79	.94
	1050	495	32.4	9.5	2.47	.63	.77	.90	31.2	9.1	2.73	.63	.78	.92	30.0	8.8	3.03	.64	.80	.95	28.6	8.4	3.36	.66	.82	.97
71°F (22°C)	860	405	32.4	9.5	2.46	.47	.59	.70	31.2	9.1	2.73	.47	.59	.71	30.0	8.8	3.03	.47	.60	.73	28.6	8.4	3.36	.47	.61	.74
	955	450	33.2	9.7	2.48	.47	.60	.72	32.0	9.4	2.75	.47	.61	.74	30.8	9.0	3.05	.48	.62	.75	29.4	8.6	3.38	.48	.63	.77
	1050	495	33.8	9.9	2.50	.48	.61	.74	32.6	9.6	2.77	.48	.62	.76	31.4	9.2	3.07	.48	.63	.77	30.0	8.8	3.40	.49	.64	.79
HS29-030 - C33-30C with G61MPV-36C-090 COOLING CAPACITY - TXV Systems Only																										
63°F (17°C)	955	450	30.0	8.8	2.41	.76	.90	1.00	29.0	8.5	2.68	.78	.92	1.00	27.8	8.1	2.97	.79	.94	1.00	26.4	7.7	3.30	.81	.97	1.00
	1085	510	30.8	9.0	2.43	.79	.94	1.00	29.6	8.7	2.69	.81	.96	1.00	28.4	8.3	2.99	.82	.98	1.00	27.2	8.0	3.33	.84	1.00	1.00
	1200	565	31.4	9.2	2.44	.82	.97	1.00	30.2	8.9	2.71	.83	.99	1.00	29.0	8.5	3.01	.85	1.00	1.00	27.8	8.1	3.34	.87	1.00	1.00
67°F (19°C)	955	450	31.4	9.2	2.45	.61	.74	.87	30.4	8.9	2.71	.62	.75	.89	29.2	8.6	3.01	.62	.77	.91	28.0	8.2	3.34	.63	.78	.93
	1085	510	32.4	9.5	2.46	.63	.77	.91	31.2	9.1	2.73	.64	.78	.93	30.0	8.8	3.03	.65	.80	.95	28.6	8.4	3.37	.66	.82	.98
	1200	565	33.0	9.7	2.48	.64	.79	.94	31.8	9.3	2.74	.65	.81	.96	30.4	8.9	3.04	.66	.83	.98	29.0	8.5	3.38	.68	.85	1.00
71°F (22°C)	955	450	32.8	9.6	2.47	.47	.60	.72	31.8	9.3	2.74	.47	.60	.73	30.6	9.0	3.05	.47	.61	.74	29.2	8.6	3.38	.48	.62	.76
	1085	510	33.8	9.9	2.50	.48	.62	.75	32.6	9.6	2.76	.48	.62	.76	31.4	9.2	3.07	.49	.63	.78	30.0	8.8	3.40	.49	.65	.80
	1200	565	34.4	10.1	2.51	.49	.63	.77	33.2	9.7	2.78	.49	.64	.79	31.8	9.3	3.08	.50	.65	.81	30.6	9.0	3.42	.50	.67	.83
HS29-030 - C33-30B with G61MPV-36B COOLING CAPACITY - TXV Systems Only																										
63°F (17°C)	975	460	30.2	8.9	2.41	.77	.91	1.00	29.0	8.5	2.68	.78	.92	1.00	27.8	8.1	2.98	.79	.95	1.00	26.6	7.8	3.31	.81	.97	1.00
	1110	525	31.0	9.1	2.43	.80	.94	1.00	29.8	8.7	2.69	.81	.97	1.00	28.6	8.4	2.99	.83	.99	1.00	27.2	8.0	3.33	.85	1.00	1.00
	1230	580	31.4	9.2	2.44	.82	.98	1.00	30.4	8.9	2.71	.84	.99	1.00	29.2	8.6	3.01	.86	1.00	1.00	28.0	8.2	3.34	.88	1.00	1.00
67°F (19°C)	975	460	31.6	9.3	2.45	.61	.75	.87	30.6	9.0	2.71	.62	.76	.89	29.4	8.6	3.01	.63	.77	.91	28.0	8.2	3.35	.64	.79	.94
	1110	525	32.4	9.5	2.47	.63	.77	.91	31.2	9.1	2.73	.64	.79	.93	30.0	8.8	3.03	.65	.81	.96	28.8	8.4	3.37	.66	.82	.98
	1230	580	33.0	9.7	2.48	.65	.80	.95	31.8	9.3	2.74	.66	.82	.97	30.6	9.0	3.05	.67	.83	.99	29.2	8.6	3.38	.68	.86	1.00
71°F (22°C)	975	460	33.0	9.7	2.48	.47	.60	.72	31.8	9.3	2.74	.47	.61	.73	30.6	9.0	3.05	.47	.62	.75	29.4	8.6	3.38	.48	.63	.77
	1110	525	33.8	9.9	2.50	.48	.62	.75	32.8	9.6	2.77	.48	.63	.77	31.4	9.2	3.07	.49	.64	.78	30.0	8.8	3.40	.49	.65	.80
	1230	580	34.6	10.1	2.51	.49	.64	.78	33.4	9.8	2.78	.49	.65	.79	32.0	9.4	3.08	.50	.66	.81	30.6	9.0	3.42	.50	.67	.83

NOTE - For Temperatures and Capacities not shown in tables, see bulletin - Cooling Unit Rating Table Correction Factor Data in Miscellaneous Engineering Data section.

Entering Wet Bulb Temperature	Total Air Volume		Outdoor Air Temperature Entering Outdoor Coil																							
			85°F (29°C)						95°F (35°C)						105°F (41°C)						115°F (46°C)					
			Total Cooling Capacity		Comp Motor kW Input	Sensible To Total Ratio (S/T) Dry Bulb			Total Cooling Capacity		Comp Motor kW Input	Sensible To Total Ratio (S/T) Dry Bulb			Total Cooling Capacity		Comp Motor kW Input	Sensible To Total Ratio (S/T) Dry Bulb			Total Cooling Capacity		Comp Motor kW Input	Sensible To Total Ratio (S/T) Dry Bulb		
	cfm	L/s	kBtuh	kW		75°F 24°C	80°F 27°C	85°F 29°C	kBtuh	kW		75°F 24°C	80°F 27°C	85°F 29°C	kBtuh	kW		75°F 24°C	80°F 27°C	85°F 29°C	kBtuh	kW		75°F 24°C	80°F 27°C	85°F 29°C
HS29-030 - C33-36C with G61MPV-36C-090 COOLING CAPACITY - TXV Systems Only																										
63°F (17°C)	955	450	30.2	8.9	2.42	.77	.91	1.00	29.2	8.6	2.68	.78	.93	1.00	27.8	8.1	2.98	.80	.95	1.00	26.6	7.8	3.31	.82	.97	1.00
	1085	510	31.0	9.1	2.43	.80	.95	1.00	29.8	8.7	2.70	.81	.97	1.00	28.6	8.4	3.00	.83	.99	1.00	27.4	8.0	3.33	.85	1.00	1.00
	1200	565	31.8	9.3	2.45	.83	.98	1.00	30.6	9.0	2.71	.84	1.00	1.00	29.4	8.6	3.01	.86	1.00	1.00	28.0	8.2	3.35	.88	1.00	1.00
67°F (19°C)	955	450	31.8	9.3	2.45	.61	.75	.88	30.6	9.0	2.72	.62	.76	.89	29.4	8.6	3.01	.63	.78	.92	28.0	8.2	3.35	.64	.79	.94
	1085	510	32.8	9.6	2.47	.63	.78	.92	31.4	9.2	2.73	.64	.79	.94	30.2	8.9	3.03	.65	.81	.96	28.6	8.4	3.37	.66	.83	.98
	1200	565	33.4	9.8	2.48	.65	.80	.95	32.0	9.4	2.75	.66	.82	.97	30.6	9.0	3.05	.67	.84	.99	29.2	8.6	3.38	.68	.86	1.00
71°F (22°C)	955	450	33.2	9.7	2.48	.47	.60	.72	32.0	9.4	2.75	.47	.61	.74	30.8	9.0	3.05	.48	.62	.75	29.4	8.6	3.39	.48	.63	.77
	1085	510	34.2	10.0	2.51	.48	.62	.75	33.0	9.7	2.77	.48	.63	.77	31.6	9.3	3.07	.49	.64	.79	30.2	8.9	3.41	.49	.65	.81
	1200	565	34.8	10.2	2.52	.49	.64	.78	33.6	9.8	2.79	.49	.65	.80	32.2	9.4	3.09	.50	.66	.82	30.8	9.0	3.42	.50	.68	.84
HS29-030 - C33-36B with G61MPV-36B COOLING CAPACITY - TXV Systems Only																										
63°F (17°C)	975	460	30.4	8.9	2.42	.77	.91	1.00	29.2	8.6	2.68	.79	.93	1.00	28.0	8.2	2.98	.80	.96	1.00	26.6	7.8	3.31	.82	.98	1.00
	1110	525	31.2	9.1	2.44	.80	.96	1.00	30.0	8.8	2.70	.82	.98	1.00	28.8	8.4	3.00	.84	.99	1.00	27.4	8.0	3.34	.86	1.00	1.00
	1230	580	31.8	9.3	2.45	.83	.99	1.00	30.6	9.0	2.71	.85	1.00	1.00	29.4	8.6	3.02	.87	1.00	1.00	28.2	8.3	3.36	.89	1.00	1.00
67°F (19°C)	975	460	32.0	9.4	2.45	.62	.75	.88	30.8	9.0	2.72	.62	.76	.90	29.4	8.6	3.02	.63	.78	.92	28.2	8.3	3.35	.64	.80	.95
	1110	525	32.8	9.6	2.47	.64	.78	.92	31.6	9.3	2.74	.64	.80	.95	30.2	8.9	3.04	.66	.81	.97	28.8	8.4	3.37	.67	.84	.99
	1230	580	33.4	9.8	2.49	.65	.81	.96	32.2	9.4	2.75	.66	.83	.98	30.8	9.0	3.05	.68	.85	1.00	29.4	8.6	3.38	.69	.87	1.00
71°F (22°C)	975	460	33.4	9.8	2.48	.47	.60	.73	32.2	9.4	2.75	.48	.61	.74	30.8	9.0	3.05	.48	.62	.76	29.4	8.6	3.39	.48	.63	.78
	1110	525	34.2	10.0	2.51	.48	.62	.76	33.0	9.7	2.78	.49	.63	.77	31.8	9.3	3.07	.49	.64	.79	30.4	8.9	3.41	.49	.66	.81
	1230	580	35.0	10.3	2.52	.49	.64	.79	33.8	9.9	2.79	.50	.65	.80	32.4	9.5	3.09	.50	.66	.82	30.8	9.0	3.43	.51	.68	.85
HS29-030 - C33-38A/B with G60UHV-36A/B COOLING CAPACITY - TXV Systems Only																										
63°F (17°C)	860	405	30.6	9.0	2.43	.74	.87	.99	29.4	8.6	2.69	.75	.89	1.00	28.2	8.3	2.99	.77	.91	1.00	26.8	7.9	3.32	.78	.93	1.00
	955	450	31.4	9.2	2.44	.76	.90	1.00	30.2	8.9	2.70	.78	.92	1.00	28.8	8.4	3.00	.79	.94	1.00	27.4	8.0	3.33	.81	.97	1.00
	1050	495	32.0	9.4	2.46	.79	.93	1.00	30.8	9.0	2.72	.80	.95	1.00	29.4	8.6	3.02	.82	.97	1.00	28.0	8.2	3.35	.84	1.00	1.00
67°F (19°C)	860	405	32.4	9.5	2.47	.60	.72	.84	31.2	9.1	2.73	.60	.73	.86	30.0	8.8	3.03	.61	.74	.87	28.6	8.4	3.37	.61	.76	.90
	955	450	33.2	9.7	2.48	.61	.74	.87	32.0	9.4	2.75	.61	.75	.89	30.6	9.0	3.05	.62	.77	.91	29.2	8.6	3.38	.63	.78	.93
	1050	495	33.8	9.9	2.50	.62	.76	.90	32.6	9.6	2.76	.63	.78	.92	31.2	9.1	3.06	.64	.79	.94	29.6	8.7	3.39	.65	.81	.97
71°F (22°C)	860	405	34.2	10.0	2.51	.46	.58	.70	33.0	9.7	2.77	.46	.59	.71	31.6	9.3	3.07	.46	.59	.72	30.2	8.9	3.41	.46	.60	.73
	955	450	35.0	10.3	2.53	.47	.60	.72	33.6	9.8	2.79	.47	.60	.73	32.4	9.5	3.09	.47	.61	.75	30.8	9.0	3.43	.47	.62	.76
	1050	495	35.6	10.4	2.54	.47	.60	.74	34.4	10.1	2.80	.48	.62	.75	32.8	9.6	3.11	.48	.62	.77	31.4	9.2	3.44	.48	.64	.79
HS29-030 - C33-38B with G61MPV-36B COOLING CAPACITY - TXV Systems Only																										
63°F (17°C)	975	460	31.4	9.2	2.44	.77	.91	1.00	30.4	8.9	2.71	.78	.93	1.00	29.0	8.5	3.01	.80	.95	1.00	27.6	8.1	3.34	.82	.98	1.00
	1110	525	32.4	9.5	2.46	.80	.95	1.00	31.2	9.1	2.73	.82	.97	1.00	29.8	8.7	3.03	.83	.99	1.00	28.4	8.3	3.36	.85	1.00	1.00
	1230	580	33.0	9.7	2.48	.83	.99	1.00	31.8	9.3	2.74	.85	1.00	1.00	30.6	9.0	3.04	.87	1.00	1.00	29.4	8.6	3.38	.89	1.00	1.00
67°F (19°C)	975	460	33.4	9.8	2.49	.61	.75	.88	32.2	9.4	2.75	.62	.76	.89	30.8	9.0	3.05	.63	.77	.92	29.4	8.6	3.39	.64	.79	.94
	1110	525	34.2	10.0	2.51	.63	.78	.92	33.0	9.7	2.77	.64	.80	.94	31.6	9.3	3.07	.65	.81	.96	30.0	8.8	3.40	.66	.83	.99
	1230	580	34.8	10.2	2.52	.65	.81	.96	33.6	9.8	2.79	.66	.82	.98	32.0	9.4	3.09	.67	.84	1.00	30.6	9.0	3.42	.68	.87	1.00
71°F (22°C)	975	460	35.2	10.3	2.53	.47	.60	.73	33.8	9.9	2.79	.47	.60	.73	32.4	9.5	3.10	.47	.61	.75	31.0	9.1	3.43	.47	.62	.77
	1110	525	36.0	10.6	2.55	.48	.61	.76	34.8	10.2	2.82	.48	.63	.77	33.2	9.7	3.12	.49	.64	.79	31.8	9.3	3.45	.49	.65	.81
	1230	580	36.6	10.7	2.56	.49	.64	.79	35.4	10.4	2.83	.49	.65	.80	33.8	9.9	3.13	.50	.66	.82	32.2	9.4	3.47	.50	.68	.84
HS29-030 - CR26-30N-F COOLING CAPACITY - TXV Systems Only																										
63°F (17°C)	800	380	29.0	8.5	2.39	.74	.86	.97	27.8	8.1	2.65	.74	.88	.99	26.8	7.9	2.95	.76	.89	1.00	25.4	7.4	3.28	.77	.91	1.00
	900	425	29.8	8.7	2.40	.76	.89	.99	28.6	8.4	2.67	.77	.91	1.00	27.4	8.0	2.96	.78	.93	1.00	26.2	7.7	3.30	.80	.95	1.00
	1000	470	30.4	8.9	2.42	.78	.92	1.00	29.2	8.6	2.68	.79	.94	1.00	28.0	8.2	2.98	.81	.96	1.00	26.6	7.8	3.31	.83	.98	1.00
67°F (19°C)	800	380	30.6	9.0	2.42	.59	.71	.83	29.4	8.6	2.69	.60	.72	.84	28.2	8.3	2.99	.60	.73	.86	27.0	7.9	3.32	.61	.75	.88
	900	425	31.4	9.2	2.44	.61	.74	.86	30.2	8.9	2.71	.61	.75	.87	29.0	8.5	3.00	.62	.76	.89	27.6	8.1	3.34	.63	.78	.92
	1000	470	32.0	9.4	2.45	.62	.76	.89	30.8	9.0	2.72	.63	.77	.91	29.6	8.7	3.02	.64	.79	.93	28.2	8.3	3.35	.65	.80	.95
71°F (22°C)	800	380	32.0	9.4	2.46	.47	.58	.69	31.0	9.1	2.72	.46	.58	.70	29.8	8.7	3.03	.46	.59	.71	28.4	8.3	3.36	.47	.60	.72
	900	425	32.8	9.6	2.48	.47	.59	.71	31.8	9.3	2.74	.47	.60	.72	30.6	9.0	3.04	.48	.61	.74	29.2	8.6	3.38	.48	.62	.75
	1000	470	33.6	9.8	2.49	.48	.61	.73	32.4	9.5	2.76	.48	.62	.75	31.2	9.1	3.06	.48	.62	.76	29.8	8.7	3.39	.48	.64	.78
HS29-030 - CR26-36N/W-F COOLING CAPACITY - TXV Systems Only																										
63°F (17°C)	800	380	29.4	8.6	2.40	.74	.86	.98	28.4	8.3	2.66	.75	.88	.99	27.2	8.0	2.96	.76	.90	1.00	25.8	7.6	3.29	.78	.92	1.00
	900	425	30.2	8.9	2.42	.76	.90	1.00	29.0	8.5	2.68	.78	.92	1.00	27.8	8.1	2.98	.79	.94	1.00	26.6	7.8	3.31	.81	.96	1.00
	1000	470	30.8	9.0	2.43	.78	.93	1.00	29.8	8.7	2.69	.80	.95	1.00	28.4	8.3	2.99	.82	.97	1.00	27.0	7.9	3.32	.84	.99	1.00
67°F (19°C)	800	380	31.2	9.1	2.44	.59	.71	.83	30.0	8.8	2.70	.60	.72	.85	28.8	8.4	3.00	.61	.74	.87	27.4	8.0	3.33	.62	.75	.89
	900	425	32.0	9.4	2.46	.61	.74	.87	30.8	9.0	2.72	.61	.75	.88	29.4	8.6	3.02	.62	.76	.90	28.0	8.2	3.35	.63	.78	.93
	1000	470	32.6	9.6	2.47	.62	.76	.90	31.4	9.2	2.73	.63	.78	.92	30.0	8.8	3.03	.64	.79	.94	28.6	8.4	3.36	.65	.81	.96
71°F (22°C)	800	380	32.8	9.6	2.47	.46	.58	.69	31.6	9.3	2.74	.46	.58	.70	30.4	8.9	3.04	.46	.59	.71	29.0	8.5	3.37	.47	.60	.73
	900	425	33.6	9.8	2.49	.47	.59	.71	32.4	9.5	2.76	.47	.60	.73	31.0	9.1	3.06	.47	.61	.74	29.6	8.7	3.39	.48	.62	.76
	1000	470	34.4	10.1	2.51	.47	.61	.74	33.0	9.7	2.77	.48	.62	.75	31.6	9.3	3.07	.48	.63	.77	30.2	8.9	3.41	.49	.64	.79
HS29-030 - CR26-36W with G61MPV-36B COOLING CAPACITY - TXV Systems Only																										
63°F (17°C)	975	460	30.6	9.0	2.43	.77	.92	1.00	29.4	8.6	2.69	.79	.93	1.00	28.2	8.3	2.98	.80	.96	1.00	26.8	7.9	3.32	.82	.98	1.00
	1110	525	31.4	9.2	2.44	.81	.96	1.00	30.2	8.9	2.71	.82	.97	1.00	29.0	8.5	3.00	.84	.99	1.00	27.6	8.1	3.34	.86	1.00	1.00
	1230	580	32.2	9.4	2.46	.83	.99	1.00	30.8	9.0	2.72	.85	1.00	1.00	29.6	8.7	3.02	.87	1.00	1.00	28.4	8.3	3.36	.90	1.00	1.00
67°F (19°C)	975	460	32.4	9.5	2.46	.61	.75	.88	31.2	9.1	2.73	.62	.76	.90	29.8	8.7	3.02	.63	.78	.92	28.4	8.3	3.36	.64	.80	.95
	1110	525	33.2	9.7	2.48	.63	.78	.92	31.8	9.3	2.75	.64	.80	.94	30.6	9.0	3.04	.65	.82	.97	29.0	8.5	3.38	.67	.84	.99
	1230	580	33.8	9.9	2.50	.65	.81	.96	32.4	9.5	2.76	.66	.83	.98	31.0	9.1	3.06	.67	.85	.99	29.4	8.6	3.39	.69	.87	1.00
71°F (22°C)	975	460	34.0	10.0	2.50	.47	.60	.73	32.8	9.6	2.77	.47	.60	.74	31.4	9.2	3.07	.47	.61	.76	30.0	8.8	3.40	.48	.63	.77
	1110	525	34.8	10.2	2.52	.48	.62	.76	33.6	9.8	2.79	.48	.63	.78	32.2	9.4	3.09	.48	.64	.79	30.6	9.0	3.42	.49	.65	.82
	1230	580	35.4	10.4	2.54	.49	.64	.79	34.2	10.0	2.80	.49	.65	.81	32.8	9.6	3.10	.49	.66	.83	31.2	9.1	3.44	.50	.68	.85

NOTE - For Temperatures and Capacities not shown in tables, see bulletin - Cooling Unit Rating Table Correction Factor Data in Miscellaneous Engineering Data section.

Entering Wet Bulb Temperature	Total Air Volume		Outdoor Air Temperature Entering Outdoor Coil																							
			85°F (29°C)						95°F (35°C)						105°F (41°C)						115°F (46°C)					
			Total Cooling Capacity		Comp Motor kW Input	Sensible To Total Ratio (S/T) Dry Bulb			Total Cooling Capacity		Comp Motor kW Input	Sensible To Total Ratio (S/T) Dry Bulb			Total Cooling Capacity		Comp Motor kW Input	Sensible To Total Ratio (S/T) Dry Bulb			Total Cooling Capacity		Comp Motor kW Input	Sensible To Total Ratio (S/T) Dry Bulb		
	cfm	L/s	kBtuh	kW		75°F 24°C	80°F 27°C	85°F 29°C	kBtuh	kW		75°F 24°C	80°F 27°C	85°F 29°C	kBtuh	kW		75°F 24°C	80°F 27°C	85°F 29°C	kBtuh	kW		75°F 24°C	80°F 27°C	85°F 29°C
HS29-030 - CH23-21 COOLING CAPACITY - TXV Systems Only																										
63°F (17°C)	900	425	28.0	8.2	2.37	.75	.87	.98	27.2	8.0	2.63	.76	.89	.99	26.2	7.7	2.93	.77	.91	1.00	25.0	7.3	3.27	.79	.93	1.00
	1000	470	28.6	8.4	2.38	.77	.90	1.00	27.8	8.1	2.65	.78	.92	1.00	26.6	7.8	2.95	.79	.94	1.00	25.6	7.5	3.28	.81	.96	1.00
	1100	520	29.2	8.6	2.39	.79	.93	1.00	28.2	8.3	2.66	.80	.95	1.00	27.2	8.0	2.96	.82	.97	1.00	26.0	7.6	3.29	.84	.98	1.00
67°F (19°C)	900	425	29.6	8.7	2.40	.61	.73	.84	28.6	8.4	2.67	.61	.74	.86	27.6	8.1	2.97	.62	.75	.88	26.4	7.7	3.31	.63	.77	.90
	1000	470	30.2	8.9	2.42	.62	.74	.87	29.2	8.6	2.68	.62	.76	.89	28.2	8.3	2.98	.63	.77	.90	27.0	7.9	3.32	.64	.79	.93
	1100	520	30.8	9.0	2.43	.63	.76	.89	29.8	8.7	2.69	.64	.78	.91	28.8	8.4	3.00	.65	.79	.94	27.4	8.0	3.33	.66	.81	.96
71°F (22°C)	900	425	31.0	9.1	2.43	.47	.59	.70	30.0	8.8	2.70	.47	.60	.71	29.0	8.5	3.00	.48	.60	.73	27.8	8.1	3.34	.47	.62	.74
	1000	470	31.8	9.3	2.45	.47	.60	.72	30.6	9.0	2.72	.48	.61	.73	29.6	8.7	3.02	.48	.62	.75	28.4	8.3	3.36	.49	.63	.77
	1100	520	32.4	9.5	2.46	.48	.62	.74	31.2	9.1	2.73	.48	.63	.76	30.2	8.9	3.03	.49	.64	.77	28.8	8.4	3.37	.49	.65	.79
HS29-030 - CH23-31 COOLING CAPACITY - TXV Systems Only																										
63°F (17°C)	900	425	28.4	8.3	2.37	.75	.88	.99	27.4	8.0	2.64	.76	.89	1.00	26.4	7.7	2.94	.78	.91	1.00	25.4	7.4	3.28	.79	.94	1.00
	1000	470	29.0	8.5	2.39	.77	.90	1.00	28.0	8.2	2.65	.78	.92	1.00	27.0	7.9	2.96	.80	.95	1.00	25.8	7.6	3.29	.82	.97	1.00
	1100	520	29.6	8.7	2.40	.79	.93	1.00	28.6	8.4	2.67	.80	.95	1.00	27.6	8.1	2.97	.82	.97	1.00	26.4	7.7	3.31	.84	.99	1.00
67°F (19°C)	900	425	30.0	8.8	2.41	.61	.73	.85	29.0	8.5	2.67	.61	.74	.86	27.8	8.1	2.98	.62	.75	.88	26.8	7.9	3.32	.63	.77	.90
	1000	470	30.6	9.0	2.42	.62	.75	.87	29.6	8.7	2.69	.63	.76	.89	28.6	8.4	2.99	.64	.78	.91	27.4	8.0	3.33	.65	.79	.94
	1100	520	31.2	9.1	2.44	.63	.77	.90	30.2	8.9	2.70	.64	.78	.92	29.0	8.5	3.01	.65	.80	.94	27.8	8.1	3.34	.66	.82	.97
71°F (22°C)	900	425	31.4	9.2	2.44	.47	.59	.71	30.4	8.9	2.71	.48	.60	.72	29.2	8.6	3.01	.48	.61	.73	28.0	8.2	3.35	.48	.62	.75
	1000	470	32.2	9.4	2.46	.48	.61	.73	31.0	9.1	2.73	.48	.62	.74	29.8	8.7	3.03	.49	.62	.75	28.6	8.4	3.36	.49	.63	.77
	1100	520	32.8	9.6	2.47	.48	.62	.75	31.6	9.3	2.74	.48	.63	.76	30.6	9.0	3.04	.49	.64	.78	29.2	8.6	3.38	.50	.65	.80
HS29-030 - CH33-24/30A-2F COOLING CAPACITY - TXV Systems Only																										
63°F (17°C)	900	425	29.6	8.7	2.40	.75	.88	1.00	28.6	8.4	2.67	.76	.90	1.00	27.4	8.0	2.96	.78	.92	1.00	26.2	7.7	3.30	.79	.94	1.00
	1000	470	30.2	8.9	2.42	.77	.91	1.00	29.2	8.6	2.68	.79	.93	1.00	28.0	8.2	2.98	.80	.95	1.00	26.6	7.8	3.31	.82	.98	1.00
	1100	520	30.8	9.0	2.43	.79	.94	1.00	29.6	8.7	2.69	.81	.96	1.00	28.4	8.3	2.99	.82	.98	1.00	27.2	8.0	3.32	.84	1.00	1.00
67°F (19°C)	900	425	31.0	9.1	2.43	.60	.73	.85	30.0	8.8	2.70	.61	.74	.87	28.8	8.4	3.00	.62	.75	.89	27.6	8.1	3.33	.63	.77	.91
	1000	470	31.6	9.3	2.45	.62	.75	.88	30.6	9.0	2.71	.62	.76	.90	29.4	8.6	3.01	.63	.78	.92	28.2	8.3	3.35	.64	.80	.95
	1100	520	32.2	9.4	2.46	.63	.77	.90	31.2	9.1	2.73	.64	.78	.93	29.8	8.7	3.03	.65	.80	.95	28.6	8.4	3.36	.66	.82	.98
71°F (22°C)	900	425	32.2	9.4	2.46	.47	.59	.71	31.2	9.1	2.73	.47	.60	.72	30.0	8.8	3.03	.47	.60	.73	28.8	8.4	3.37	.48	.61	.75
	1000	470	33.0	9.7	2.48	.47	.60	.73	32.0	9.4	2.75	.48	.61	.74	30.8	9.0	3.05	.48	.62	.75	29.4	8.6	3.39	.48	.63	.77
	1100	520	33.6	9.8	2.49	.48	.62	.75	32.6	9.6	2.76	.48	.63	.76	31.2	9.1	3.07	.49	.64	.78	30.0	8.8	3.40	.49	.65	.80
HS29-030 - CH33-36A/B/C-2F COOLING CAPACITY - TXV Systems Only																										
63°F (17°C)	900	425	29.8	8.7	2.41	.75	.88	1.00	28.8	8.4	2.67	.76	.90	1.00	27.4	8.0	2.97	.77	.92	1.00	26.2	7.7	3.30	.79	.94	1.00
	1000	470	30.4	8.9	2.42	.77	.91	1.00	29.4	8.6	2.69	.78	.93	1.00	28.0	8.2	2.98	.80	.95	1.00	26.6	7.8	3.31	.82	.98	1.00
	1100	520	31.0	9.1	2.43	.79	.94	1.00	29.8	8.7	2.70	.80	.96	1.00	28.6	8.4	2.99	.82	.98	1.00	27.2	8.0	3.33	.84	1.00	1.00
67°F (19°C)	900	425	31.4	9.2	2.44	.60	.72	.85	30.4	8.9	2.71	.61	.74	.86	29.2	8.6	3.01	.61	.75	.88	27.8	8.1	3.34	.62	.76	.91
	1000	470	32.2	9.4	2.46	.61	.75	.88	31.0	9.1	2.73	.62	.76	.89	29.8	8.7	3.02	.63	.77	.92	28.4	8.3	3.35	.64	.79	.94
	1100	520	32.8	9.6	2.47	.63	.77	.91	31.6	9.3	2.74	.63	.78	.93	30.2	8.9	3.04	.64	.80	.95	28.8	8.4	3.37	.66	.82	.98
71°F (22°C)	900	425	33.2	9.7	2.48	.47	.59	.70	32.0	9.4	2.75	.47	.59	.71	30.8	9.0	3.05	.47	.60	.73	29.4	8.6	3.39	.47	.61	.74
	1000	470	33.8	9.9	2.50	.47	.60	.72	32.6	9.6	2.76	.47	.61	.73	31.4	9.2	3.07	.48	.61	.75	30.0	8.8	3.40	.48	.63	.77
	1100	520	34.4	10.1	2.51	.48	.61	.74	33.2	9.7	2.78	.48	.62	.76	31.8	9.3	3.08	.48	.63	.77	30.4	8.9	3.42	.49	.64	.79
HS29-030 - CH23-41 COOLING CAPACITY - TXV Systems Only																										
63°F (17°C)	900	425	29.6	8.7	2.40	.75	.88	.99	28.4	8.3	2.66	.76	.90	1.00	27.4	8.0	2.97	.78	.92	1.00	26.2	7.7	3.30	.79	.94	1.00
	1000	470	30.2	8.9	2.42	.77	.91	1.00	29.2	8.6	2.68	.78	.93	1.00	28.0	8.2	2.98	.80	.95	1.00	26.8	7.9	3.31	.82	.97	1.00
	1100	520	30.8	9.0	2.43	.79	.94	1.00	29.8	8.7	2.70	.81	.96	1.00	28.6	8.4	2.99	.82	.98	1.00	27.4	8.0	3.33	.85	.99	1.00
67°F (19°C)	900	425	31.4	9.2	2.44	.60	.73	.85	30.4	8.9	2.71	.61	.74	.86	29.2	8.6	3.01	.62	.75	.88	27.8	8.1	3.34	.63	.77	.91
	1000	470	32.2	9.4	2.46	.62	.75	.88	31.0	9.1	2.72	.62	.76	.90	29.8	8.7	3.02	.64	.78	.92	28.4	8.3	3.36	.65	.80	.94
	1100	520	32.8	9.6	2.47	.63	.77	.91	31.6	9.3	2.74	.64	.78	.93	30.2	8.9	3.04	.65	.80	.95	29.0	8.5	3.38	.66	.82	.97
71°F (22°C)	900	425	33.4	9.8	2.49	.47	.59	.70	32.2	9.4	2.75	.47	.59	.72	31.0	9.1	3.06	.47	.61	.73	29.6	8.7	3.39	.48	.62	.75
	1000	470	34.2	10.0	2.51	.48	.60	.72	32.8	9.6	2.77	.48	.61	.74	31.6	9.3	3.07	.48	.62	.75	30.2	8.9	3.41	.49	.63	.77
	1100	520	34.8	10.2	2.52	.48	.62	.75	33.6	9.8	2.79	.49	.63	.76	32.2	9.4	3.09	.49	.64	.78	30.8	9.0	3.43	.50	.65	.80
HS29-030 - CH23-51 COOLING CAPACITY - TXV Systems Only																										
63°F (17°C)	900	425	30.4	8.9	2.42	.75	.89	1.00	29.4	8.6	2.68	.77	.90	1.00	28.2	8.3	2.98	.78	.92	1.00	26.8	7.9	3.32	.80	.95	1.00
	1000	470	31.2	9.1	2.44	.77	.92	1.00	30.0	8.8	2.70	.79	.93	1.00	28.8	8.4	3.00	.81	.96	1.00	27.4	8.0	3.33	.82	.98	1.00
	1100	520	31.8	9.3	2.45	.80	.95	1.00	30.6	9.0	2.71	.81	.97	1.00	29.4	8.6	3.02	.83	.98	1.00	28.0	8.2	3.35	.85	1.00	1.00
67°F (19°C)	900	425	32.2	9.4	2.46	.60	.73	.85	31.0	9.1	2.72	.61	.74	.87	29.8	8.7	3.02	.62	.75	.89	28.4	8.3	3.36	.63	.77	.91
	1000	470	33.0	9.7	2.48	.62	.75	.88	31.8	9.3	2.74	.62	.76	.90	30.4	8.9	3.04	.63	.78	.92	29.0	8.5	3.37	.65	.80	.95
	1100	520	33.6	9.8	2.49	.63	.77	.92	32.4	9.5	2.76	.64	.79	.94	31.0	9.1	3.06	.65	.81	.96	29.4	8.6	3.39	.66	.83	.98
71°F (22°C)	900	425	34.0	10.0	2.50	.46	.59	.70	32.8	9.6	2.77	.47	.60	.72	31.4	9.2	3.07	.47	.60	.73	30.0	8.8	3.40	.47	.61	.75
	1000	470	34.8	10.2	2.52	.47	.60	.73	33.6	9.8	2.79	.47	.61	.74	32.2	9.4	3.09	.48	.62	.76	30.6	9.0	3.42	.48	.63	.78
	1100	520	35.4	10.4	2.53	.47	.62	.75	34.0	10.0	2.80	.48	.63	.77	32.8	9.6	3.10	.48	.64	.78	31.2	9.1	3.44	.49	.65	.81
HS29-030 - CH33-42B-2F COOLING CAPACITY - TXV Systems Only																										
63°F (17°C)	900	425	30.8	9.0	2.43	.75	.88	1.00	29.6	8.7	2.69	.76	.90	1.00	28.4	8.3	2.99	.77	.92	1.00	27.0	7.9	3.32	.79	.94	1.00
	1000	470	31.4	9.2	2.44	.77	.91	1.00	30.2	8.9	2.71	.78	.93	1.00	29.0	8.5	3.00	.80	.95	1.00	27.6	8.1	3.34	.82	.98	1.00
	1100	520	32.0	9.4	2.46	.79	.94	1.00	30.8	9.0	2.72	.81	.96	1.00	29.6	8.7	3.02	.82	.98	1.00	28.0	8.2	3.35	.84	1.00	1.00
67°F (19°C)	900	425	32.6	9.6	2.47	.60	.72	.85	31.4	9.2	2.73	.60	.73	.86	30.0	8.8	3.03	.61	.75	.88	28.6	8.4	3.37	.62	.77	.91
	1000	470	33.4	9.8	2.49	.61	.75	.88	32.0	9.4	2.75	.62	.76	.89	30.8	9.0	3.05	.63	.78	.92	29.2	8.6	3.38	.64	.79	.94
	1100	520	33.8	9.9	2.49	.62	.76	.91	32.6	9.6	2.76	.63	.78	.93	31.2	9.1	3.06	.64	.80	.95	29.8	8.7	3.40	.66	.82	.98
71°F (22°C)	900	425	34.2	10.0	2.51	.46	.58	.70	33.0	9.7	2.78	.47	.59	.71	31.8	9.3	3.07	.47	.60	.72	30.4	8.9	3.41	.47	.61	.74
	1000	470	35.0	10.3	2.53	.47	.60	.72	33.8	9.9	2.79	.47	.60	.73	32.4	9.5	3.09	.48	.61	.75	31.0	9.1	3.43	.48	.63	.77
	1100	520	35.6	10.4	2.54	.48	.61	.74	34.4	10.1	2.80	.48	.62	.76	33.0	9.7	3.11	.48	.63	.77	31.4	9.2	3.45	.49	.64	.80

NOTE - For Temperatures and Capacities not shown in tables, see bulletin - Cooling Unit Rating Table Correction Factor Data in Miscellaneous Engineering Data section.

Entering Wet Bulb Temperature	Total Air Volume		Outdoor Air Temperature Entering Outdoor Coil																							
			85°F (29°C)						95°F (35°C)						105°F (41°C)						115°F (46°C)					
			Total Cooling Capacity		Comp Motor kW Input	Sensible To Total Ratio (S/T) Dry Bulb			Total Cooling Capacity		Comp Motor kW Input	Sensible To Total Ratio (S/T) Dry Bulb			Total Cooling Capacity		Comp Motor kW Input	Sensible To Total Ratio (S/T) Dry Bulb			Total Cooling Capacity		Comp Motor kW Input	Sensible To Total Ratio (S/T) Dry Bulb		
	cfm	L/s	kBtuh	kW		75°F 24°C	80°F 27°C	85°F 29°C	kBtuh	kW		75°F 24°C	80°F 27°C	85°F 29°C	kBtuh	kW		75°F 24°C	80°F 27°C	85°F 29°C	kBtuh	kW		75°F 24°C	80°F 27°C	85°F 29°C
HS29-030 - CH33-24/30A-2F with G60UHV-36A-070 COOLING CAPACITY - TXV Systems Only																										
63°F (17°C)	860	405	29.2	8.6	2.39	.74	.86	.99	28.2	8.3	2.65	.75	.88	1.00	27.0	7.9	2.96	.76	.90	1.00	25.8	7.6	3.29	.78	.92	1.00
	955	450	29.8	8.7	2.41	.76	.89	1.00	28.8	8.4	2.67	.77	.91	1.00	27.6	8.1	2.97	.78	.93	1.00	26.4	7.7	3.30	.80	.96	1.00
	1050	495	30.4	8.9	2.42	.78	.92	1.00	29.2	8.6	2.68	.79	.94	1.00	28.0	8.2	2.98	.80	.96	1.00	26.8	7.9	3.32	.82	.99	1.00
67°F (19°C)	860	405	30.6	9.0	2.42	.59	.71	.83	29.6	8.7	2.69	.60	.72	.85	28.4	8.3	2.99	.61	.74	.87	27.2	8.0	3.32	.61	.75	.89
	955	450	31.2	9.1	2.44	.60	.73	.86	30.2	8.9	2.71	.61	.75	.88	29.0	8.5	3.01	.62	.76	.90	27.8	8.1	3.34	.63	.78	.92
	1050	495	31.8	9.3	2.45	.62	.75	.89	30.8	9.0	2.72	.62	.77	.90	29.6	8.7	3.02	.63	.78	.93	28.2	8.3	3.35	.64	.80	.95
71°F (22°C)	860	405	31.8	9.3	2.45	.46	.58	.69	30.8	9.0	2.72	.46	.58	.70	29.6	8.7	3.02	.46	.59	.71	28.4	8.3	3.36	.47	.60	.73
	955	450	32.6	9.6	2.47	.46	.59	.71	31.6	9.3	2.74	.47	.60	.72	30.4	8.9	3.04	.47	.61	.74	29.0	8.5	3.38	.47	.62	.75
	1050	495	33.2	9.7	2.48	.47	.60	.73	32.0	9.4	2.75	.47	.61	.74	30.8	9.0	3.05	.48	.62	.76	29.6	8.7	3.39	.48	.63	.78
HS29-030 - CH33-36A/B-2F with G60UHV-36A/B COOLING CAPACITY - TXV Systems Only																										
63°F (17°C)	860	405	29.4	8.6	2.40	.73	.86	.99	28.4	8.3	2.66	.74	.88	1.00	27.0	7.9	2.96	.76	.90	1.00	25.8	7.6	3.29	.77	.92	1.00
	955	450	30.0	8.8	2.41	.75	.89	1.00	29.0	8.5	2.68	.77	.91	1.00	27.6	8.1	2.97	.78	.93	1.00	26.4	7.7	3.30	.80	.96	1.00
	1050	495	30.6	9.0	2.42	.77	.92	1.00	29.4	8.6	2.69	.79	.94	1.00	28.2	8.3	2.98	.80	.96	1.00	26.8	7.9	3.32	.82	.99	1.00
67°F (19°C)	860	405	31.2	9.1	2.44	.59	.71	.83	30.0	8.8	2.70	.59	.72	.84	28.8	8.4	3.00	.60	.73	.86	27.4	8.0	3.33	.61	.75	.88
	955	450	31.8	9.3	2.45	.60	.73	.86	30.6	9.0	2.71	.61	.74	.87	29.4	8.6	3.01	.61	.75	.89	28.0	8.2	3.35	.62	.77	.92
	1050	495	32.4	9.5	2.46	.61	.75	.88	31.2	9.1	2.73	.62	.76	.90	29.8	8.7	3.03	.63	.78	.93	28.6	8.4	3.36	.64	.80	.95
71°F (22°C)	860	405	32.8	9.6	2.47	.46	.57	.69	31.6	9.3	2.74	.46	.58	.69	30.4	8.9	3.04	.46	.59	.71	29.0	8.5	3.38	.46	.59	.72
	955	450	33.4	9.8	2.49	.46	.59	.70	32.2	9.4	2.76	.46	.59	.72	31.0	9.1	3.06	.47	.60	.73	29.6	8.7	3.39	.47	.61	.75
	1050	495	34.0	10.0	2.51	.47	.60	.73	32.8	9.6	2.77	.47	.61	.74	31.6	9.3	3.07	.47	.61	.75	30.0	8.8	3.41	.48	.63	.77
HS29-030 - CH33-36B-2F with G61MPV-36B COOLING CAPACITY - TXV Systems Only																										
63°F (17°C)	975	460	30.4	8.9	2.42	.77	.91	1.00	29.4	8.6	2.69	.78	.93	1.00	28.2	8.3	2.98	.80	.95	1.00	26.8	7.9	3.32	.82	.98	1.00
	1110	525	31.2	9.1	2.44	.80	.95	1.00	30.2	8.9	2.70	.81	.97	1.00	28.8	8.4	3.00	.83	.99	1.00	27.6	8.1	3.34	.85	1.00	1.00
	1230	580	31.8	9.3	2.45	.83	.99	1.00	30.6	9.0	2.72	.84	1.00	1.00	29.6	8.7	3.02	.86	1.00	1.00	28.4	8.3	3.36	.89	1.00	1.00
67°F (19°C)	975	460	32.0	9.4	2.45	.61	.75	.88	30.8	9.0	2.72	.62	.76	.90	29.6	8.7	3.02	.63	.78	.92	28.2	8.3	3.35	.64	.79	.94
	1110	525	32.8	9.6	2.47	.63	.78	.92	31.6	9.3	2.74	.64	.79	.94	30.4	8.9	3.04	.65	.81	.96	29.0	8.5	3.37	.66	.83	.99
	1230	580	33.4	9.8	2.49	.65	.81	.96	32.2	9.4	2.75	.66	.82	.98	31.0	9.1	3.05	.67	.84	1.00	29.4	8.6	3.39	.68	.87	1.00
71°F (22°C)	975	460	33.4	9.8	2.49	.47	.60	.72	32.2	9.4	2.75	.47	.61	.74	31.0	9.1	3.06	.47	.62	.75	29.6	8.7	3.39	.48	.63	.77
	1110	525	34.2	10.0	2.51	.48	.62	.76	33.0	9.7	2.78	.48	.63	.77	31.8	9.3	3.07	.49	.64	.79	30.4	8.9	3.41	.49	.65	.81
	1230	580	35.0	10.3	2.52	.49	.64	.78	33.6	9.8	2.79	.49	.65	.80	32.4	9.5	3.09	.50	.66	.82	30.8	9.0	3.43	.50	.68	.84
HS29-030 - CH33-36C-2F with G61MPV-36C-090 COOLING CAPACITY - TXV Systems Only																										
63°F (17°C)	955	450	30.6	9.0	2.42	.77	.91	1.00	29.4	8.6	2.69	.79	.93	1.00	28.0	8.2	2.98	.80	.96	1.00	26.8	7.9	3.32	.82	.98	1.00
	1085	510	31.4	9.2	2.44	.80	.96	1.00	30.2	8.9	2.70	.82	.98	1.00	29.0	8.5	3.00	.84	1.00	1.00	27.6	8.1	3.34	.86	1.00	1.00
	1200	565	32.0	9.4	2.46	.83	.99	1.00	30.8	9.0	2.72	.85	1.00	1.00	29.6	8.7	3.02	.87	1.00	1.00	28.4	8.3	3.36	.89	1.00	1.00
67°F (19°C)	955	450	32.2	9.4	2.46	.62	.75	.88	31.0	9.1	2.72	.62	.76	.90	29.6	8.7	3.02	.63	.78	.92	28.2	8.3	3.36	.65	.80	.95
	1085	510	33.0	9.7	2.48	.64	.78	.93	31.8	9.3	2.74	.64	.80	.95	30.4	8.9	3.04	.66	.82	.97	29.0	8.5	3.37	.67	.84	.99
	1200	565	33.6	9.8	2.49	.65	.81	.96	32.4	9.5	2.76	.66	.83	.98	31.0	9.1	3.06	.68	.85	1.00	29.4	8.6	3.39	.69	.87	1.00
71°F (22°C)	955	450	33.4	9.8	2.49	.47	.60	.73	32.2	9.4	2.76	.47	.61	.74	31.0	9.1	3.06	.48	.62	.76	29.6	8.7	3.39	.48	.63	.78
	1085	510	34.4	10.1	2.51	.48	.62	.76	33.2	9.7	2.78	.49	.63	.77	31.8	9.3	3.08	.49	.64	.79	30.4	8.9	3.41	.49	.66	.81
	1200	565	35.2	10.3	2.53	.49	.64	.79	33.8	9.9	2.79	.50	.65	.80	32.4	9.5	3.10	.50	.67	.82	31.0	9.1	3.43	.51	.68	.85
HS29-030 - CH33-42B-2F with G60UHV-36B-090 COOLING CAPACITY - TXV Systems Only																										
63°F (17°C)	860	405	30.4	8.9	2.42	.73	.86	.98	29.2	8.6	2.68	.74	.88	1.00	28.0	8.2	2.98	.76	.90	1.00	26.6	7.8	3.31	.77	.92	1.00
	955	450	31.0	9.1	2.44	.75	.89	1.00	29.8	8.7	2.70	.76	.91	1.00	28.6	8.4	3.00	.78	.93	1.00	27.2	8.0	3.33	.80	.95	1.00
	1050	495	31.6	9.3	2.44	.77	.92	1.00	30.4	8.9	2.71	.79	.94	1.00	29.0	8.5	3.01	.80	.96	1.00	27.6	8.1	3.34	.82	.99	1.00
67°F (19°C)	860	405	32.2	9.4	2.46	.59	.71	.83	31.0	9.1	2.72	.59	.72	.84	29.6	8.7	3.02	.60	.73	.86	28.2	8.3	3.36	.61	.75	.88
	955	450	32.8	9.6	2.48	.60	.73	.86	31.6	9.3	2.74	.60	.74	.87	30.4	8.9	3.04	.61	.76	.89	28.8	8.4	3.37	.62	.77	.92
	1050	495	33.6	9.8	2.49	.61	.75	.88	32.2	9.4	2.75	.62	.76	.90	30.8	9.0	3.05	.63	.78	.93	29.4	8.6	3.38	.64	.80	.95
71°F (22°C)	860	405	33.8	9.9	2.50	.45	.57	.68	32.6	9.6	2.76	.46	.58	.70	31.4	9.2	3.07	.46	.58	.71	30.0	8.8	3.40	.46	.59	.72
	955	450	34.6	10.1	2.52	.46	.59	.71	33.4	9.8	2.78	.46	.59	.72	32.0	9.4	3.08	.46	.60	.73	30.6	9.0	3.42	.47	.61	.75
	1050	495	35.2	10.3	2.53	.47	.60	.73	34.0	10.0	2.80	.47	.60	.74	32.6	9.6	3.10	.47	.61	.75	31.0	9.1	3.43	.47	.63	.77
HS29-030 - CH33-42B-2F with G61MPV-36B COOLING CAPACITY - TXV Systems Only																										
63°F (17°C)	975	460	31.2	9.1	2.44	.76	.90	1.00	30.0	8.8	2.70	.77	.92	1.00	28.6	8.4	3.00	.78	.94	1.00	27.4	8.0	3.33	.80	.96	1.00
	1110	525	32.0	9.4	2.46	.79	.94	1.00	30.8	9.0	2.72	.80	.96	1.00	29.4	8.6	3.02	.82	.98	1.00	28.0	8.2	3.35	.84	1.00	1.00
	1230	580	32.6	9.6	2.47	.81	.97	1.00	31.4	9.2	2.73	.83	.99	1.00	30.0	8.8	3.03	.85	1.00	1.00	28.8	8.4	3.37	.87	1.00	1.00
67°F (19°C)	975	460	33.0	9.7	2.48	.60	.74	.86	31.8	9.3	2.74	.61	.74	.88	30.4	8.9	3.04	.62	.76	.90	29.0	8.5	3.38	.63	.78	.93
	1110	525	33.8	9.9	2.49	.62	.76	.90	32.6	9.6	2.76	.63	.78	.93	31.2	9.1	3.06	.64	.80	.95	29.8	8.7	3.40	.65	.82	.97
	1230	580	34.4	10.1	2.51	.64	.79	.94	33.2	9.7	2.78	.65	.81	.96	31.8	9.3	3.08	.66	.83	.99	30.2	8.9	3.41	.67	.85	1.00
71°F (22°C)	975	460	34.8	10.2	2.52	.46	.59	.71	33.4	9.8	2.78	.46	.59	.72	32.2	9.4	3.09	.47	.60	.74	30.8	9.0	3.43	.47	.61	.76
	1110	525	35.6	10.4	2.54	.47	.61	.74	34.2	10.0	2.80	.48	.61	.76	33.0	9.7	3.11	.48	.63	.77	31.4	9.2	3.45	.48	.64	.79
	1230	580	36.2	10.6	2.55	.49	.63	.76	35.0	10.3	2.82	.49	.64	.78	33.6	9.8	3.13	.49	.65	.80	32.0	9.4	3.46	.49	.66	.82
HS29-030 - CB29M-31 - CB28UH-030 COOLING CAPACITY - TXV Systems Only																										
63°F (17°C)	900	425	28.8	8.4	2.38	.74	.87	.98	27.8	8.1	2.65	.75	.88	.99	26.6	7.8	2.95	.76	.90	1.00	25.4	7.4	3.28	.78	.92	1.00
	1000	470	29.4	8.6	2.40	.76	.89	1.00	28.2	8.3	2.66	.77	.91	1.00	27.2	8.0	2.96	.78	.93	1.00	26.0	7.6	3.30	.80	.95	1.00
	1100	520	30.0	8.8	2.41	.77	.92	1.00	28.8	8.4	2.67	.79	.93	1.00	27.8	8.1	2.97	.80	.95	1.00	26.6	7.8	3.31	.82	.97	1.00
67°F (19°C)	900	425	30.2	8.9	2.42	.59	.72	.84	29.2	8.6	2.68	.60	.73	.85	28.0	8.2	2.98	.61	.74	.87	26.8	7.9	3.32	.61	.76	.89
	1000	470	30.8	9.0	2.43	.60	.73	.86	29.8	8.7	2.69	.61	.75	.88	28.6	8.4	2.99	.62	.76	.90	27.4	8.0	3.33	.63	.78	.92
	1100	520	31.4	9.2	2.44	.62	.75	.89	30.4	8.9	2.71	.62	.77	.91	29.2	8.6	3.01	.63	.78	.92	27.8	8.1	3.34	.64	.80	.94
71°F (22°C)	900	425	31.4	9.2	2.45	.45	.58	.69	30.4	8.9	2.71	.46	.59	.70	29.4	8.6	3.01	.46	.59	.72	28.0	8.2	3.35	.47	.60	.73
	1000	470	32.2	9.4	2.46	.46	.59	.71	31.2	9.1	2.73	.46	.60	.72	30.0	8.8	3.03	.47	.61	.74	28.6	8.4	3.36	.47	.62	.76
	1100	520	32.8	9.6	2.47	.47	.60	.73	31.6	9.3	2.74	.47	.61	.74	30.6	9.0	3.04	.47	.62	.76	29.2	8.6	3.38	.48	.63	.78

NOTE - For Temperatures and Capacities not shown in tables, see bulletin - Cooling Unit Rating Table Correction Factor Data in Miscellaneous Engineering Data section.

Entering Wet Bulb Temperature	Total Air Volume		Outdoor Air Temperature Entering Outdoor Coil																							
			85°F (29°C)						95°F (35°C)						105°F (41°C)						115°F (46°C)					
			Total Cooling Capacity		Comp Motor kW Input	Sensible To Total Ratio (S/T) Dry Bulb			Total Cooling Capacity		Comp Motor kW Input	Sensible To Total Ratio (S/T) Dry Bulb			Total Cooling Capacity		Comp Motor kW Input	Sensible To Total Ratio (S/T) Dry Bulb			Total Cooling Capacity		Comp Motor kW Input	Sensible To Total Ratio (S/T) Dry Bulb		
	cfm	L/s	kBtuh	kW		75°F 24°C	80°F 27°C	85°F 29°C	kBtuh	kW		75°F 24°C	80°F 27°C	85°F 29°C	kBtuh	kW		75°F 24°C	80°F 27°C	85°F 29°C	kBtuh	kW		75°F 24°C	80°F 27°C	85°F 29°C
HS29-030 - CB29M-41 - CB28UH-036 COOLING CAPACITY - TXV Systems Only																										
63°F (17°C)	900	425	28.8	8.4	2.39	.74	.88	.99	27.8	8.1	2.65	.76	.89	1.00	26.8	7.9	2.95	.77	.91	1.00	25.6	7.5	3.28	.79	.93	1.00
	1000	470	29.6	8.7	2.40	.76	.90	1.00	28.6	8.4	2.66	.78	.92	1.00	27.4	8.0	2.96	.79	.94	1.00	26.2	7.7	3.30	.81	.96	1.00
	1100	520	30.2	8.9	2.41	.78	.93	1.00	29.2	8.6	2.68	.80	.94	1.00	28.0	8.2	2.98	.81	.96	1.00	26.8	7.9	3.31	.83	.98	1.00
67°F (19°C)	900	425	30.4	8.9	2.42	.60	.72	.84	29.4	8.6	2.68	.60	.73	.86	28.2	8.3	2.98	.61	.75	.88	27.0	7.9	3.32	.62	.76	.90
	1000	470	31.0	9.1	2.44	.61	.74	.87	30.0	8.8	2.70	.61	.75	.89	28.8	8.4	3.00	.62	.77	.91	27.4	8.0	3.33	.63	.79	.93
	1100	520	31.6	9.3	2.45	.62	.76	.90	30.6	9.0	2.71	.63	.78	.92	29.4	8.6	3.01	.64	.79	.94	28.0	8.2	3.34	.65	.81	.96
71°F (22°C)	900	425	31.8	9.3	2.45	.46	.58	.70	30.8	9.0	2.72	.46	.59	.71	29.6	8.7	3.02	.46	.60	.72	28.2	8.3	3.35	.47	.61	.74
	1000	470	32.6	9.6	2.47	.46	.59	.72	31.4	9.2	2.74	.46	.60	.73	30.2	8.9	3.04	.47	.61	.75	28.8	8.4	3.37	.47	.62	.76
	1100	520	33.2	9.7	2.48	.47	.61	.74	32.2	9.4	2.75	.47	.61	.75	30.8	9.0	3.05	.47	.63	.77	29.4	8.6	3.39	.48	.64	.79
HS29-030 - CB30M-21/26 - CB30U-21/26 COOLING CAPACITY - TXV Systems Only																										
63°F (17°C)	800	380	29.0	8.5	2.39	.72	.85	.97	27.8	8.1	2.65	.73	.86	.98	26.6	7.8	2.94	.74	.88	1.00	25.4	7.4	3.28	.76	.90	1.00
	900	425	29.8	8.7	2.41	.74	.88	1.00	28.6	8.4	2.67	.75	.90	1.00	27.4	8.0	2.96	.77	.92	1.00	26.0	7.6	3.29	.79	.94	1.00
	1000	470	30.4	8.9	2.42	.76	.91	1.00	29.2	8.6	2.68	.78	.93	1.00	27.8	8.1	2.98	.79	.95	1.00	26.6	7.8	3.31	.81	.97	1.00
67°F (19°C)	800	380	30.6	9.0	2.42	.57	.70	.81	29.6	8.7	2.69	.58	.71	.83	28.2	8.3	2.99	.59	.72	.85	27.0	7.9	3.32	.60	.73	.87
	900	425	31.4	9.2	2.44	.59	.72	.85	30.2	8.9	2.71	.59	.73	.86	29.0	8.5	3.01	.60	.75	.88	27.6	8.1	3.34	.61	.76	.91
	1000	470	32.0	9.4	2.46	.60	.74	.88	30.8	9.0	2.72	.61	.75	.90	29.6	8.7	3.02	.62	.77	.92	28.2	8.3	3.35	.63	.79	.94
71°F (22°C)	800	380	32.2	9.4	2.46	.44	.56	.67	31.0	9.1	2.73	.44	.56	.68	29.8	8.7	3.03	.45	.57	.69	28.4	8.3	3.36	.45	.58	.71
	900	425	33.0	9.7	2.48	.45	.57	.69	31.8	9.3	2.74	.45	.58	.71	30.6	9.0	3.05	.45	.59	.72	29.2	8.6	3.38	.46	.60	.74
	1000	470	33.8	9.9	2.49	.45	.59	.72	32.6	9.6	2.76	.46	.59	.73	31.2	9.1	3.06	.46	.60	.75	29.8	8.7	3.40	.46	.62	.76
HS29-030 - CB30M-31 - CB30U-31 COOLING CAPACITY - TXV Systems Only																										
63°F (17°C)	850	400	29.6	8.7	2.40	.74	.87	.99	28.6	8.4	2.66	.75	.89	1.00	27.4	8.0	2.96	.76	.91	1.00	26.0	7.6	3.29	.78	.93	1.00
	1000	470	30.6	9.0	2.42	.77	.92	1.00	29.4	8.6	2.69	.78	.94	1.00	28.2	8.3	2.98	.80	.96	1.00	26.8	7.9	3.32	.82	.98	1.00
	1150	545	31.4	9.2	2.44	.80	.96	1.00	30.2	8.9	2.71	.82	.98	1.00	29.0	8.5	3.00	.84	1.00	1.00	27.6	8.1	3.34	.86	1.00	1.00
67°F (19°C)	850	400	31.4	9.2	2.44	.58	.71	.84	30.2	8.9	2.71	.59	.72	.85	29.0	8.5	3.00	.60	.74	.87	27.6	8.1	3.34	.61	.75	.90
	1000	470	32.4	9.5	2.47	.61	.75	.89	31.2	9.1	2.73	.61	.76	.91	29.8	8.7	3.03	.62	.78	.93	28.4	8.3	3.36	.63	.80	.95
	1150	545	33.2	9.7	2.48	.63	.78	.94	32.0	9.4	2.75	.63	.80	.95	30.6	9.0	3.05	.64	.82	.97	29.0	8.5	3.38	.66	.84	.99
71°F (22°C)	850	400	33.0	9.7	2.48	.44	.57	.69	31.8	9.3	2.74	.45	.57	.70	30.4	8.9	3.04	.45	.58	.71	29.0	8.5	3.38	.45	.59	.73
	1000	470	34.0	10.0	2.51	.46	.59	.73	32.8	9.6	2.77	.46	.60	.74	31.4	9.2	3.07	.46	.61	.75	30.0	8.8	3.40	.46	.62	.77
	1150	545	35.0	10.3	2.52	.47	.62	.76	33.6	9.8	2.79	.47	.62	.77	32.2	9.4	3.09	.47	.63	.79	30.6	9.0	3.42	.47	.65	.82
HS29-030 - CB30M-41 - CB30U-41/46 COOLING CAPACITY - TXV Systems Only																										
63°F (17°C)	900	425	30.2	8.9	2.41	.75	.89	1.00	29.0	8.5	2.68	.76	.91	1.00	27.8	8.1	2.97	.78	.93	1.00	26.4	7.7	3.30	.79	.95	1.00
	1000	470	30.8	9.0	2.43	.77	.92	1.00	29.6	8.7	2.69	.79	.95	1.00	28.2	8.3	2.99	.80	.97	1.00	27.0	7.9	3.32	.82	.99	1.00
	1100	520	31.4	9.2	2.44	.80	.96	1.00	30.2	8.9	2.70	.81	.97	1.00	28.8	8.4	3.00	.83	.99	1.00	27.4	8.0	3.33	.85	1.00	1.00
67°F (19°C)	900	425	31.8	9.3	2.45	.59	.73	.86	30.6	9.0	2.71	.60	.74	.87	29.4	8.6	3.01	.61	.75	.90	28.0	8.2	3.35	.62	.77	.92
	1000	470	32.6	9.6	2.47	.61	.75	.89	31.2	9.1	2.73	.61	.76	.91	30.0	8.8	3.03	.62	.78	.93	28.6	8.4	3.36	.63	.80	.96
	1100	520	33.2	9.7	2.48	.62	.77	.93	31.8	9.3	2.74	.63	.79	.95	30.4	8.9	3.04	.64	.81	.96	29.0	8.5	3.37	.65	.83	.99
71°F (22°C)	900	425	33.6	9.8	2.49	.45	.58	.70	32.2	9.4	2.76	.45	.58	.71	31.0	9.1	3.05	.45	.59	.73	29.6	8.7	3.39	.46	.60	.75
	1000	470	34.2	10.0	2.51	.46	.59	.73	33.0	9.7	2.77	.46	.60	.74	31.6	9.3	3.07	.46	.61	.76	30.0	8.8	3.41	.46	.62	.78
	1100	520	34.8	10.2	2.52	.46	.61	.75	33.4	9.8	2.79	.46	.62	.77	32.2	9.4	3.09	.47	.63	.78	30.6	9.0	3.42	.47	.64	.80
HS29-030 - CB31MV-41 COOLING CAPACITY - TXV Systems Only																										
63°F (17°C)	900	425	30.2	8.9	2.41	.75	.89	1.00	29.0	8.5	2.68	.76	.91	1.00	27.8	8.1	2.97	.78	.93	1.00	26.2	7.7	3.30	.79	.95	1.00
	975	460	30.6	9.0	2.42	.77	.92	1.00	29.4	8.6	2.69	.78	.94	1.00	28.2	8.3	2.98	.80	.96	1.00	26.8	7.9	3.31	.82	.98	1.00
	1090	515	31.2	9.1	2.44	.79	.95	1.00	30.0	8.8	2.70	.81	.97	1.00	28.8	8.4	3.00	.83	.99	1.00	27.4	8.0	3.33	.85	1.00	1.00
67°F (19°C)	900	425	31.8	9.3	2.45	.59	.73	.86	30.6	9.0	2.71	.60	.74	.87	29.4	8.6	3.01	.61	.75	.90	28.0	8.2	3.35	.62	.77	.92
	975	460	32.4	9.5	2.46	.60	.75	.88	31.2	9.1	2.73	.61	.76	.90	29.8	8.7	3.03	.62	.77	.92	28.4	8.3	3.36	.63	.79	.95
	1090	515	33.0	9.7	2.48	.62	.77	.92	31.8	9.3	2.74	.63	.78	.94	30.4	8.9	3.04	.64	.80	.96	29.0	8.5	3.37	.65	.83	.98
71°F (22°C)	900	425	33.4	9.8	2.49	.45	.58	.70	32.2	9.4	2.76	.45	.58	.71	31.0	9.1	3.05	.45	.59	.73	29.4	8.6	3.39	.46	.60	.75
	975	460	34.0	10.0	2.50	.46	.59	.72	32.8	9.6	2.77	.45	.60	.73	31.4	9.2	3.07	.46	.61	.75	30.0	8.8	3.40	.46	.62	.77
	1090	515	34.8	10.2	2.52	.46	.61	.75	33.4	9.8	2.78	.46	.61	.76	32.0	9.4	3.09	.47	.63	.78	30.6	9.0	3.42	.47	.64	.80
HS29-030 - CVP10-31/EC10Q3 COOLING CAPACITY - TXV Systems Only																										
63°F (17°C)	800	380	28.8	8.4	2.38	.74	.87	.98	27.8	8.1	2.65	.75	.88	.99	26.6	7.8	2.95	.76	.90	1.00	25.4	7.4	3.28	.78	.92	1.00
	1000	470	30.0	8.8	2.41	.79	.93	1.00	29.0	8.5	2.68	.80	.95	1.00	27.8	8.1	2.97	.82	.97	1.00	26.6	7.8	3.30	.84	.98	1.00
	1200	565	31.0	9.1	2.43	.83	.98	1.00	30.0	8.8	2.70	.85	.99	1.00	28.8	8.4	3.00	.87	1.00	1.00	27.8	8.1	3.34	.89	1.00	1.00
67°F (19°C)	800	380	30.4	8.9	2.42	.59	.71	.83	29.4	8.6	2.69	.60	.73	.85	28.2	8.3	2.99	.60	.73	.87	27.0	7.9	3.32	.61	.75	.89
	1000	470	31.8	9.3	2.45	.62	.76	.90	30.8	9.0	2.72	.63	.78	.92	29.4	8.6	3.02	.64	.79	.94	28.2	8.3	3.35	.65	.81	.96
	1200	565	32.8	9.6	2.48	.65	.81	.96	31.6	9.3	2.74	.66	.83	.97	30.4	8.9	3.04	.68	.85	.99	29.0	8.5	3.37	.69	.87	1.00
71°F (22°C)	800	380	32.2	9.4	2.46	.46	.58	.69	31.2	9.1	2.73	.46	.58	.70	30.0	8.8	3.03	.46	.59	.71	28.6	8.4	3.37	.46	.60	.72
	1000	470	33.6	9.8	2.49	.47	.61	.74	32.6	9.6	2.76	.47	.62	.75	31.2	9.1	3.06	.48	.63	.77	29.8	8.7	3.40	.48	.64	.79
	1200	565	34.6	10.1	2.52	.49	.64	.79	33.4	9.8	2.78	.49	.65	.80	32.0	9.4	3.08	.50	.66	.82	30.6	9.0	3.42	.50	.68	.85
HS29-030 - CVP10-41/EC10Q3 COOLING CAPACITY - TXV Systems Only																										
63°F (17°C)	800	380	29.2	8.6	2.40	.74	.87	.98	28.2	8.3	2.66	.75	.88	.99	27.2	8.0	2.96	.76	.90	1.00	26.0	7.6	3.29	.77	.92	1.00
	1000	470	30.6	9.0	2.42	.78	.93	1.00	29.6	8.7	2.69	.80	.95	1.00	28.4	8.3	2.99	.82	.97	1.00	27.2	8.0	3.33	.84	.99	1.00
	1200	565	31.6	9.3	2.45	.83	.98	1.00	30.6	9.0	2.72	.85	1.00	1.00	29.6	8.7	3.02	.87	1.00	1.00	28.4	8.3	3.36	.89	1.00	1.00
67°F (19°C)	800	380	31.2	9.1	2.43	.59	.71	.83	30.0	8.8	2.70	.60	.72	.85	28.8	8.4	3.00	.60	.74	.86	27.6	8.1	3.34	.61	.75	.89
	1000	470	32.6	9.6	2.47	.62	.76	.90	31.4	9.2	2.73	.63	.78	.92	30.2	8.9	3.03	.64	.79	.94	28.8	8.4	3.37	.65	.81	.96
	1200	565	33.4	9.8	2.49	.65	.81	.96	32.2	9.4	2.75	.66	.83	.98	31.0	9.1	3.06	.68	.85	.99	29.6	8.7	3.39	.69	.87	1.00
71°F (22°C)	800	380	32.8	9.6	2.48	.46	.58	.69	31.8	9.3	2.74	.46	.58	.70	30.6	9.0	3.05	.46	.59	.71	29.2	8.6	3.38	.46	.60	.73
	1000	470	34.4	10.1	2.51	.47	.61	.74	33.2	9.7	2.78	.48	.62	.75	31.8	9.3	3.08	.48	.63	.77	30.4	8.9	3.41	.48	.64	.79
	1200	565	35.4	10.4	2.53	.49	.64	.79	34.2	10.0	2.80	.49	.65	.80	32.8	9.6	3.10	.50	.66	.82	31.4	9.2	3.44	.50	.68	.85

NOTE - For Temperatures and Capacities not shown in tables, see bulletin - Cooling Unit Rating Table Correction Factor Data in Miscellaneous Engineering Data section.

Entering Wet Bulb Temperature	Total Air Volume		Outdoor Air Temperature Entering Outdoor Coil																							
			85°F (29°C)						95°F (35°C)						105°F (41°C)						115°F (46°C)					
			Total Cooling Capacity		Comp Motor kW Input	Sensible To Total Ratio (S/T) Dry Bulb			Total Cooling Capacity		Comp Motor kW Input	Sensible To Total Ratio (S/T) Dry Bulb			Total Cooling Capacity		Comp Motor kW Input	Sensible To Total Ratio (S/T) Dry Bulb			Total Cooling Capacity		Comp Motor kW Input	Sensible To Total Ratio (S/T) Dry Bulb		
	cfm	L/s	kBtuh	kW		75°F 24°C	80°F 27°C	85°F 29°C	kBtuh	kW		75°F 24°C	80°F 27°C	85°F 29°C	kBtuh	kW		75°F 24°C	80°F 27°C	85°F 29°C	kBtuh	kW		75°F 24°C	80°F 27°C	85°F 29°C
HS29-030 - C33-30A/B COOLING CAPACITY - RFC Systems Only																										
63°F (17°C)	900	425	29.8	8.7	2.39	.76	.89	1.00	28.6	8.4	2.65	.77	.91	1.00	27.6	8.1	2.94	.78	.93	1.00	26.2	7.7	3.27	.80	.95	1.00
	1000	470	30.4	8.9	2.40	.78	.92	1.00	29.4	8.6	2.66	.79	.94	1.00	28.2	8.3	2.96	.81	.96	1.00	26.8	7.9	3.29	.83	.98	1.00
	1100	520	31.0	9.1	2.41	.80	.95	1.00	29.8	8.7	2.67	.81	.97	1.00	28.6	8.4	2.97	.83	.99	1.00	27.2	8.0	3.30	.85	1.00	1.00
67°F (19°C)	900	425	31.2	9.1	2.42	.61	.74	.86	30.2	8.9	2.68	.62	.75	.87	29.0	8.5	2.98	.62	.76	.89	27.6	8.1	3.31	.63	.78	.92
	1000	470	32.0	9.4	2.43	.62	.76	.89	30.8	9.0	2.70	.63	.77	.90	29.6	8.7	2.99	.64	.78	.93	28.2	8.3	3.33	.65	.80	.95
	1100	520	32.6	9.6	2.45	.64	.78	.91	31.4	9.2	2.71	.64	.79	.94	30.2	8.9	3.01	.65	.81	.96	28.8	8.4	3.34	.66	.83	.98
71°F (22°C)	900	425	32.6	9.6	2.45	.47	.60	.71	31.4	9.2	2.71	.48	.60	.72	30.2	8.9	3.01	.48	.61	.74	29.0	8.5	3.35	.48	.62	.75
	1000	470	33.2	9.7	2.46	.48	.61	.73	32.2	9.4	2.73	.48	.62	.75	31.0	9.1	3.03	.48	.63	.76	29.6	8.7	3.36	.49	.64	.78
	1100	520	34.0	10.0	2.48	.49	.62	.75	32.8	9.6	2.74	.49	.63	.77	31.4	9.2	3.04	.49	.64	.79	30.2	8.9	3.38	.50	.65	.81
HS29-030 - C33-36A/B/C COOLING CAPACITY - RFC Systems Only																										
63°F (17°C)	900	425	30.0	8.8	2.39	.76	.90	1.00	28.8	8.4	2.65	.78	.92	1.00	27.6	8.1	2.94	.79	.94	1.00	26.2	7.7	3.27	.81	.96	1.00
	1000	470	30.6	9.0	2.40	.79	.93	1.00	29.6	8.7	2.67	.80	.95	1.00	28.2	8.3	2.96	.82	.97	1.00	27.0	7.9	3.29	.83	.99	1.00
	1100	520	31.2	9.1	2.42	.81	.96	1.00	30.0	8.8	2.68	.82	.98	1.00	28.8	8.4	2.97	.84	.99	1.00	27.6	8.1	3.31	.86	1.00	1.00
67°F (19°C)	900	425	31.6	9.3	2.42	.61	.74	.86	30.4	8.9	2.69	.62	.75	.88	29.2	8.6	2.98	.63	.77	.90	27.8	8.1	3.31	.64	.78	.93
	1000	470	32.2	9.4	2.44	.63	.76	.90	31.0	9.1	2.70	.63	.78	.91	29.8	8.7	3.00	.64	.79	.94	28.4	8.3	3.33	.66	.81	.96
	1100	520	32.8	9.6	2.45	.64	.78	.93	31.6	9.3	2.71	.65	.80	.95	30.4	8.9	3.01	.66	.82	.97	28.8	8.4	3.35	.67	.84	.99
71°F (22°C)	900	425	32.8	9.6	2.45	.47	.60	.72	31.8	9.3	2.72	.48	.61	.73	30.4	8.9	3.02	.48	.62	.74	29.0	8.5	3.35	.49	.63	.76
	1000	470	33.6	9.8	2.47	.48	.61	.74	32.6	9.6	2.74	.48	.62	.75	31.2	9.1	3.03	.49	.63	.77	29.8	8.7	3.37	.49	.64	.79
	1100	520	34.4	10.1	2.49	.49	.63	.76	33.2	9.7	2.75	.49	.64	.78	31.8	9.3	3.05	.50	.65	.80	30.4	8.9	3.38	.50	.66	.82
HS29-030 - C33-38A/B COOLING CAPACITY - RFC Systems Only																										
63°F (17°C)	900	425	31.0	9.1	2.42	.76	.89	1.00	29.8	8.7	2.67	.77	.91	1.00	28.6	8.4	2.97	.78	.93	1.00	27.2	8.0	3.30	.80	.95	1.00
	1000	470	31.8	9.3	2.43	.78	.92	1.00	30.6	9.0	2.69	.80	.94	1.00	29.2	8.6	2.99	.81	.97	1.00	27.8	8.1	3.32	.83	.99	1.00
	1100	520	32.4	9.5	2.44	.81	.96	1.00	31.2	9.1	2.71	.82	.98	1.00	29.8	8.7	3.00	.84	1.00	1.00	28.6	8.4	3.33	.86	1.00	1.00
67°F (19°C)	900	425	33.0	9.7	2.46	.61	.74	.86	31.8	9.3	2.72	.61	.75	.87	30.4	8.9	3.01	.62	.76	.90	29.0	8.5	3.34	.63	.78	.92
	1000	470	33.6	9.8	2.47	.62	.76	.89	32.4	9.5	2.73	.63	.77	.91	31.0	9.1	3.03	.64	.79	.93	29.6	8.7	3.36	.65	.81	.96
	1100	520	34.2	10.0	2.49	.63	.78	.92	33.0	9.7	2.75	.64	.80	.94	31.6	9.3	3.05	.65	.82	.97	30.0	8.8	3.38	.67	.84	.99
71°F (22°C)	900	425	34.6	10.1	2.50	.47	.59	.71	33.4	9.8	2.76	.47	.60	.72	32.0	9.4	3.06	.47	.61	.74	30.6	9.0	3.39	.48	.62	.75
	1000	470	35.4	10.4	2.51	.48	.60	.74	34.0	10.0	2.77	.48	.61	.75	32.8	9.6	3.08	.48	.63	.76	31.2	9.1	3.41	.48	.63	.78
	1100	520	36.0	10.6	2.53	.48	.62	.76	34.8	10.2	2.79	.49	.63	.77	33.4	9.8	3.09	.49	.64	.79	31.8	9.3	3.42	.49	.66	.81
HS29-030 - CR26-30N-F COOLING CAPACITY - RFC Systems Only																										
63°F (17°C)	900	425	29.8	8.7	2.38	.76	.89	.99	28.6	8.4	2.64	.77	.91	1.00	27.4	8.0	2.94	.78	.93	1.00	26.2	7.7	3.27	.80	.95	1.00
	1000	470	30.4	8.9	2.40	.78	.92	1.00	29.2	8.6	2.66	.79	.94	1.00	28.0	8.2	2.95	.81	.96	1.00	26.6	7.8	3.28	.83	.98	1.00
	1100	520	31.0	9.1	2.41	.80	.94	1.00	29.8	8.7	2.67	.82	.96	1.00	28.4	8.3	2.96	.83	.98	1.00	27.2	8.0	3.30	.86	.99	1.00
67°F (19°C)	900	425	31.4	9.2	2.42	.61	.74	.86	30.2	8.9	2.68	.61	.75	.87	29.0	8.5	2.98	.62	.76	.89	27.6	8.1	3.31	.63	.78	.92
	1000	470	32.0	9.4	2.43	.62	.76	.89	30.8	9.0	2.70	.63	.77	.91	29.6	8.7	2.99	.64	.79	.93	28.2	8.3	3.33	.65	.80	.95
	1100	520	32.6	9.6	2.45	.63	.78	.91	31.4	9.2	2.71	.64	.79	.93	30.0	8.8	3.01	.65	.81	.95	28.6	8.4	3.34	.66	.83	.97
71°F (22°C)	900	425	33.0	9.7	2.45	.47	.59	.71	31.8	9.3	2.72	.47	.60	.72	30.6	9.0	3.02	.48	.61	.74	29.2	8.6	3.35	.48	.62	.75
	1000	470	33.6	9.8	2.47	.48	.61	.73	32.4	9.5	2.74	.48	.62	.75	31.2	9.1	3.03	.48	.62	.76	29.8	8.7	3.36	.48	.64	.78
	1100	520	34.2	10.0	2.48	.48	.62	.76	33.0	9.7	2.75	.48	.63	.77	31.6	9.3	3.04	.49	.64	.79	30.2	8.9	3.38	.49	.65	.81
HS29-030 - CR26-36N/W-F COOLING CAPACITY - RFC Systems Only																										
63°F (17°C)	900	425	30.2	8.9	2.39	.76	.90	1.00	29.0	8.5	2.66	.78	.92	1.00	27.8	8.1	2.95	.79	.94	1.00	26.6	7.8	3.28	.81	.96	1.00
	1000	470	31.0	9.1	2.41	.78	.93	1.00	29.8	8.7	2.67	.80	.95	1.00	28.4	8.3	2.97	.82	.97	1.00	27.0	7.9	3.30	.84	.99	1.00
	1100	520	31.6	9.3	2.42	.81	.96	1.00	30.4	8.9	2.68	.82	.98	1.00	29.0	8.5	2.98	.84	.99	1.00	27.6	8.1	3.31	.87	1.00	1.00
67°F (19°C)	900	425	32.0	9.4	2.43	.61	.74	.87	30.8	9.0	2.69	.61	.75	.88	29.4	8.6	2.99	.62	.76	.90	28.0	8.2	3.32	.63	.78	.93
	1000	470	32.6	9.6	2.45	.62	.76	.90	31.4	9.2	2.71	.63	.78	.92	30.0	8.8	3.01	.64	.79	.94	28.6	8.4	3.33	.65	.81	.96
	1100	520	33.2	9.7	2.46	.64	.79	.93	32.0	9.4	2.72	.65	.80	.95	30.6	9.0	3.02	.66	.82	.97	29.0	8.5	3.35	.67	.84	.99
71°F (22°C)	900	425	33.6	9.8	2.47	.47	.59	.71	32.4	9.5	2.74	.47	.60	.73	31.0	9.1	3.03	.47	.61	.74	29.6	8.7	3.36	.48	.62	.76
	1000	470	34.4	10.1	2.49	.47	.61	.74	33.0	9.7	2.75	.48	.62	.75	31.6	9.3	3.05	.48	.63	.77	30.2	8.9	3.38	.49	.64	.79
	1100	520	34.8	10.2	2.50	.48	.62	.76	33.6	9.8	2.76	.48	.63	.78	32.2	9.4	3.06	.49	.64	.80	30.6	9.0	3.39	.50	.66	.82
HS29-030 - CH23-31 COOLING CAPACITY - RFC Systems Only																										
63°F (17°C)	900	425	28.4	8.3	2.35	.75	.88	.99	27.4	8.0	2.62	.76	.89	1.00	26.4	7.7	2.92	.78	.91	1.00	25.4	7.4	3.25	.79	.94	1.00
	1000	470	29.0	8.5	2.37	.77	.90	1.00	28.0	8.2	2.63	.78	.92	1.00	27.0	7.9	2.93	.80	.95	1.00	25.8	7.6	3.27	.82	.97	1.00
	1100	520	29.6	8.7	2.38	.79	.93	1.00	28.6	8.4	2.64	.80	.95	1.00	27.6	8.1	2.95	.82	.97	1.00	26.4	7.7	3.28	.84	.99	1.00
67°F (19°C)	900	425	30.0	8.8	2.39	.61	.73	.85	29.0	8.5	2.65	.61	.74	.86	28.0	8.2	2.95	.62	.75	.88	26.8	7.9	3.29	.63	.77	.90
	1000	470	30.6	9.0	2.40	.62	.75	.87	29.6	8.7	2.67	.63	.76	.89	28.6	8.4	2.97	.64	.78	.91	27.4	8.0	3.30	.65	.79	.94
	1100	520	31.2	9.1	2.42	.63	.77	.90	30.2	8.9	2.68	.64	.78	.92	29.0	8.5	2.98	.65	.80	.94	27.8	8.1	3.31	.66	.82	.97
71°F (22°C)	900	425	31.4	9.2	2.42	.47	.59	.71	30.4	8.9	2.69	.48	.60	.72	29.2	8.6	2.99	.48	.61	.73	28.0	8.2	3.32	.48	.62	.75
	1000	470	32.2	9.4	2.44	.48	.61	.73	31.0	9.1	2.70	.48	.62	.74	30.0	8.8	3.00	.49	.62	.75	28.6	8.4	3.34	.49	.63	.77
	1100	520	32.8	9.6	2.45	.48	.62	.75	31.6	9.3	2.72	.48	.63	.76	30.6	9.0	3.02	.49	.64	.78	29.2	8.6	3.35	.50	.65	.80
HS29-030 - CH33-30A-2F COOLING CAPACITY - RFC Systems Only																										
63°F (17°C)	900	425	29.6	8.7	2.38	.75	.88	1.00	28.6	8.4	2.64	.76	.90	1.00	27.4	8.0	2.94	.78	.92	1.00	26.2	7.7	3.27	.79	.94	1.00
	1000	470	30.2	8.9	2.39	.77	.91	1.00	29.2	8.6	2.66	.79	.93	1.00	28.0	8.2	2.96	.80	.95	1.00	26.6	7.8	3.28	.82	.98	1.00
	1100	520	30.8	9.0	2.41	.79	.94	1.00	29.6	8.7	2.67	.81	.96	1.00	28.4	8.3	2.97	.82	.98	1.00	27.2	8.0	3.29	.84	1.00	1.00
67°F (19°C)	900	425	31.0	9.1	2.41	.60	.73	.85	30.0	8.8	2.68	.61	.74	.87	28.8	8.4	2.98	.62	.75	.89	27.6	8.1	3.30	.63	.77	.91
	1000	470	31.6	9.3	2.43	.62	.75	.88	30.6	9.0	2.69	.62	.76	.90	29.4	8.6	2.99	.63	.78	.92	28.2	8.3	3.32	.64	.80	.95
	1100	520	32.2	9.4	2.44	.63	.77	.90	31.2	9.1	2.70	.64	.78	.93	30.0	8.8	3.00	.65	.80	.95	28.6	8.4	3.33	.66	.82	.98
71°F (22°C)	900	425	32.4	9.5	2.44	.47	.59	.71	31.2	9.1	2.71	.47	.60	.72	30.0	8.8	3.00	.47	.60	.73	28.8	8.4	3.34	.48	.61	.75
	1000	470	33.0	9.7	2.46	.47	.60	.73	32.0	9.4	2.72	.48	.61	.74	30.8	9.0	3.03	.48	.62	.75	29.4	8.6	3.36	.48	.63	.77
	1100	520	33.6	9.8	2.47	.48	.62	.75	32.6	9.6	2.74	.48	.63	.76	31.4	9.2	3.04	.49	.64	.78	30.0	8.8	3.37	.49	.65	.80

NOTE - For Temperatures and Capacities not shown in tables, see bulletin - Cooling Unit Rating Table Correction Factor Data in Miscellaneous Engineering Data section.

Entering Wet Bulb Temperature	Total Air Volume		Outdoor Air Temperature Entering Outdoor Coil																							
			85°F (29°C)						95°F (35°C)						105°F (41°C)						115°F (46°C)					
			Total Cooling Capacity		Comp Motor kW Input	Sensible To Total Ratio (S/T) Dry Bulb			Total Cooling Capacity		Comp Motor kW Input	Sensible To Total Ratio (S/T) Dry Bulb			Total Cooling Capacity		Comp Motor kW Input	Sensible To Total Ratio (S/T) Dry Bulb			Total Cooling Capacity		Comp Motor kW Input	Sensible To Total Ratio (S/T) Dry Bulb		
	cfm	L/s	kBtuh	kW		75°F 24°C	80°F 27°C	85°F 29°C	kBtuh	kW		75°F 24°C	80°F 27°C	85°F 29°C	kBtuh	kW		75°F 24°C	80°F 27°C	85°F 29°C	kBtuh	kW		75°F 24°C	80°F 27°C	85°F 29°C
HS29-030 - CH33-36A/B/C-2F COOLING CAPACITY - RFC Systems Only																										
63°F (17°C)	900	425	29.8	8.7	2.39	.75	.88	1.00	28.8	8.4	2.65	.76	.90	1.00	27.4	8.0	2.94	.77	.92	1.00	26.2	7.7	3.27	.79	.94	1.00
	1000	470	30.4	8.9	2.40	.77	.91	1.00	29.4	8.6	2.66	.78	.93	1.00	28.0	8.2	2.96	.80	.95	1.00	26.8	7.9	3.29	.82	.98	1.00
	1100	520	31.0	9.1	2.41	.79	.94	1.00	29.8	8.7	2.68	.80	.96	1.00	28.6	8.4	2.97	.82	.98	1.00	27.2	8.0	3.30	.84	1.00	1.00
67°F (19°C)	900	425	31.4	9.2	2.42	.60	.72	.85	30.4	8.9	2.69	.61	.74	.86	29.2	8.6	2.99	.61	.75	.88	27.8	8.1	3.31	.62	.76	.91
	1000	470	32.2	9.4	2.44	.61	.75	.88	31.0	9.1	2.70	.62	.76	.89	29.8	8.7	3.00	.63	.77	.92	28.4	8.3	3.33	.64	.79	.94
	1100	520	32.8	9.6	2.45	.63	.77	.91	31.6	9.3	2.71	.63	.78	.93	30.2	8.9	3.01	.64	.80	.95	28.8	8.4	3.35	.66	.82	.98
71°F (22°C)	900	425	33.2	9.7	2.46	.47	.59	.70	32.0	9.4	2.73	.47	.59	.71	30.8	9.0	3.03	.47	.60	.72	29.4	8.6	3.36	.47	.61	.74
	1000	470	33.8	9.9	2.48	.47	.60	.72	32.8	9.6	2.74	.47	.61	.73	31.4	9.2	3.04	.48	.61	.75	30.0	8.8	3.37	.48	.63	.77
	1100	520	34.4	10.1	2.49	.48	.61	.74	33.2	9.7	2.76	.48	.62	.76	31.8	9.3	3.05	.48	.63	.77	30.4	8.9	3.39	.49	.64	.79
HS29-030 - CH23-41 COOLING CAPACITY - RFC Systems Only																										
63°F (17°C)	900	425	29.6	8.7	2.38	.75	.88	.99	28.6	8.4	2.64	.76	.90	1.00	27.4	8.0	2.94	.78	.92	1.00	26.2	7.7	3.27	.79	.94	1.00
	1000	470	30.2	8.9	2.40	.77	.91	1.00	29.2	8.6	2.66	.78	.93	1.00	28.0	8.2	2.95	.80	.95	1.00	26.8	7.9	3.29	.82	.97	1.00
	1100	520	30.8	9.0	2.41	.79	.94	1.00	29.8	8.7	2.67	.81	.96	1.00	28.6	8.4	2.97	.82	.98	1.00	27.4	8.0	3.31	.85	.99	1.00
67°F (19°C)	900	425	31.4	9.2	2.42	.60	.73	.85	30.4	8.9	2.69	.61	.74	.86	29.2	8.6	2.98	.62	.75	.88	27.8	8.1	3.32	.63	.77	.91
	1000	470	32.2	9.4	2.44	.62	.75	.88	31.0	9.1	2.70	.62	.76	.90	29.8	8.7	3.00	.64	.78	.92	28.4	8.3	3.33	.65	.80	.94
	1100	520	32.8	9.6	2.45	.63	.77	.91	31.6	9.3	2.72	.64	.78	.93	30.4	8.9	3.01	.65	.80	.95	29.0	8.5	3.35	.66	.82	.97
71°F (22°C)	900	425	33.4	9.8	2.46	.47	.59	.70	32.2	9.4	2.73	.47	.59	.72	31.0	9.1	3.03	.47	.61	.73	29.6	8.7	3.36	.48	.62	.75
	1000	470	34.2	10.0	2.48	.48	.60	.72	32.8	9.6	2.75	.48	.61	.74	31.6	9.3	3.05	.48	.62	.75	30.2	8.9	3.38	.49	.63	.77
	1100	520	34.8	10.2	2.50	.48	.62	.75	33.6	9.8	2.76	.49	.63	.76	32.2	9.4	3.06	.49	.64	.78	30.8	9.0	3.40	.50	.65	.80

NOTE - For Temperatures and Capacities not shown in tables, see bulletin - Cooling Unit Rating Table Correction Factor Data in Miscellaneous Engineering Data section.

Entering Wet Bulb Temperature	Total Air Volume		Outdoor Air Temperature Entering Outdoor Coil																							
			85°F (29°C)						95°F (35°C)						105°F (41°C)						115°F (46°C)					
			Total Cooling Capacity		Comp Motor kW Input	Sensible To Total Ratio (S/T) Dry Bulb			Total Cooling Capacity		Comp Motor kW Input	Sensible To Total Ratio (S/T) Dry Bulb			Total Cooling Capacity		Comp Motor kW Input	Sensible To Total Ratio (S/T) Dry Bulb			Total Cooling Capacity		Comp Motor kW Input	Sensible To Total Ratio (S/T) Dry Bulb		
	cfm	L/s	kBtuh	kW		75°F 24°C	80°F 27°C	85°F 29°C	kBtuh	kW		75°F 24°C	80°F 27°C	85°F 29°C	kBtuh	kW		75°F 24°C	80°F 27°C	85°F 29°C	kBtuh	kW		75°F 24°C	80°F 27°C	85°F 29°C
HS29-036 - C33-36A/B/C COOLING CAPACITY - TXV Systems Only																										
63°F (17°C)	1000	470	34.6	10.1	2.81	.75	.88	.99	33.4	9.8	3.12	.76	.90	1.00	32.0	9.4	3.46	.78	.92	1.00	30.6	9.0	3.86	.79	.94	1.00
	1200	565	36.0	10.6	2.84	.79	.93	1.00	34.6	10.1	3.14	.80	.95	1.00	33.2	9.7	3.49	.82	.97	1.00	31.8	9.3	3.89	.84	.99	1.00
	1400	660	37.0	10.8	2.86	.82	.98	1.00	35.8	10.5	3.17	.84	.99	1.00	34.4	10.1	3.52	.86	1.00	1.00	33.2	9.7	3.92	.88	1.00	1.00
67°F (19°C)	1000	470	36.4	10.7	2.85	.61	.73	.85	35.2	10.3	3.16	.61	.74	.86	33.8	9.9	3.51	.62	.75	.88	32.4	9.5	3.90	.63	.77	.90
	1200	565	37.8	11.1	2.88	.63	.77	.90	36.6	10.7	3.19	.64	.78	.92	35.2	10.3	3.54	.65	.79	.94	33.6	9.8	3.94	.66	.81	.96
	1400	660	39.0	11.4	2.90	.65	.80	.95	37.6	11.0	3.21	.66	.82	.97	36.2	10.6	3.56	.67	.83	.99	34.6	10.1	3.96	.68	.86	1.00
71°F (22°C)	1000	470	38.0	11.1	2.88	.47	.59	.71	36.6	10.7	3.19	.48	.60	.72	35.4	10.4	3.54	.48	.61	.73	34.0	10.0	3.95	.48	.62	.74
	1200	565	39.5	11.6	2.91	.48	.62	.74	38.0	11.1	3.23	.49	.62	.76	36.8	10.8	3.58	.49	.63	.77	35.4	10.4	3.99	.49	.64	.79
	1400	660	40.5	11.9	2.94	.49	.64	.78	39.5	11.6	3.25	.50	.65	.80	37.8	11.1	3.61	.50	.66	.81	36.4	10.7	4.01	.51	.67	.83
HS29-036 - C33-42B COOLING CAPACITY - TXV Systems Only																										
63°F (17°C)	1000	470	34.6	10.1	2.81	.75	.88	.99	33.4	9.8	3.12	.76	.90	1.00	32.0	9.4	3.46	.78	.92	1.00	30.6	9.0	3.86	.79	.94	1.00
	1200	565	36.0	10.6	2.84	.79	.93	1.00	34.6	10.1	3.14	.80	.95	1.00	33.2	9.7	3.49	.82	.97	1.00	31.8	9.3	3.89	.84	.99	1.00
	1400	660	37.0	10.8	2.86	.82	.98	1.00	35.8	10.5	3.17	.84	.99	1.00	34.4	10.1	3.52	.86	1.00	1.00	33.2	9.7	3.92	.88	1.00	1.00
67°F (19°C)	1000	470	36.4	10.7	2.85	.61	.73	.85	35.2	10.3	3.16	.61	.74	.86	33.8	9.9	3.51	.62	.75	.88	32.4	9.5	3.90	.63	.77	.90
	1200	565	37.8	11.1	2.88	.63	.77	.90	36.6	10.7	3.19	.64	.78	.92	35.2	10.3	3.54	.65	.79	.94	33.6	9.8	3.94	.66	.81	.96
	1400	660	39.0	11.4	2.90	.65	.80	.95	37.6	11.0	3.21	.66	.82	.97	36.2	10.6	3.56	.67	.83	.99	34.6	10.1	3.96	.68	.86	1.00
71°F (22°C)	1000	470	38.0	11.1	2.88	.47	.59	.71	36.6	10.7	3.19	.48	.60	.72	35.4	10.4	3.54	.48	.61	.73	34.0	10.0	3.95	.48	.62	.74
	1200	565	39.5	11.6	2.91	.48	.62	.74	38.0	11.1	3.23	.49	.62	.76	36.8	10.8	3.58	.49	.63	.77	35.4	10.4	3.99	.49	.64	.79
	1400	660	40.5	11.9	2.94	.49	.64	.78	39.5	11.6	3.25	.50	.65	.80	37.8	11.1	3.61	.50	.66	.81	36.4	10.7	4.01	.51	.67	.83
HS29-036 - C33-44C COOLING CAPACITY - TXV Systems Only																										
63°F (17°C)	1000	470	35.8	10.5	2.83	.74	.86	.98	34.4	10.1	3.14	.75	.88	1.00	33.2	9.7	3.49	.76	.90	1.00	31.8	9.3	3.89	.77	.92	1.00
	1200	565	37.0	10.8	2.86	.78	.92	1.00	35.6	10.4	3.17	.79	.93	1.00	34.4	10.1	3.52	.80	.95	1.00	33.0	9.7	3.92	.82	.98	1.00
	1400	660	38.5	11.3	2.89	.81	.96	1.00	36.8	10.8	3.20	.83	.98	1.00	35.4	10.4	3.55	.84	1.00	1.00	34.0	10.0	3.95	.86	1.00	1.00
67°F (19°C)	1000	470	37.8	11.1	2.88	.60	.72	.83	36.6	10.7	3.19	.60	.73	.85	35.2	10.3	3.54	.61	.74	.86	33.8	9.9	3.94	.61	.75	.88
	1200	565	39.5	11.6	2.91	.62	.75	.88	38.0	11.1	3.22	.62	.77	.90	36.4	10.7	3.57	.63	.78	.92	35.0	10.3	3.98	.64	.80	.94
	1400	660	40.5	11.9	2.93	.64	.79	.93	39.0	11.4	3.24	.65	.80	.95	37.4	11.0	3.60	.66	.82	.97	35.8	10.5	4.00	.67	.84	.99
71°F (22°C)	1000	470	40.0	11.7	2.92	.47	.58	.69	38.5	11.3	3.23	.47	.59	.70	37.2	10.9	3.59	.47	.59	.71	35.6	10.4	4.00	.47	.60	.72
	1200	565	41.5	12.2	2.95	.47	.60	.73	40.0	11.7	3.27	.48	.61	.74	38.5	11.3	3.63	.48	.62	.75	37.0	10.8	4.03	.49	.63	.77
	1400	660	42.5	12.5	2.98	.49	.63	.77	41.0	12.0	3.30	.49	.63	.78	39.5	11.6	3.65	.49	.64	.79	38.0	11.1	4.06	.50	.66	.81
HS29-036 - C33-48B/C COOLING CAPACITY - TXV Systems Only																										
63°F (17°C)	1000	470	35.8	10.5	2.84	.74	.86	.98	34.6	10.1	3.14	.75	.87	.99	33.2	9.7	3.49	.76	.89	1.00	32.0	9.4	3.89	.77	.91	1.00
	1200	565	37.4	11.0	2.87	.77	.91	1.00	36.0	10.6	3.18	.78	.93	1.00	34.6	10.1	3.53	.80	.95	1.00	33.2	9.7	3.93	.81	.97	1.00
	1400	660	38.5	11.3	2.90	.80	.96	1.00	37.2	10.9	3.20	.82	.97	1.00	35.8	10.5	3.55	.84	.99	1.00	34.2	10.0	3.96	.86	1.00	1.00
67°F (19°C)	1000	470	38.0	11.1	2.88	.60	.71	.83	36.8	10.8	3.19	.60	.72	.84	35.4	10.4	3.55	.61	.73	.86	33.8	9.9	3.95	.61	.75	.88
	1200	565	39.5	11.6	2.91	.61	.75	.87	38.0	11.1	3.23	.62	.76	.89	36.6	10.7	3.58	.63	.77	.91	35.2	10.3	3.98	.64	.79	.93
	1400	660	40.5	11.9	2.94	.64	.78	.92	39.0	11.4	3.25	.65	.80	.94	37.6	11.0	3.61	.65	.81	.96	36.0	10.6	4.01	.67	.83	.98
71°F (22°C)	1000	470	40.0	11.7	2.93	.47	.58	.69	38.5	11.3	3.24	.47	.58	.70	37.4	11.0	3.59	.47	.59	.71	35.8	10.5	4.00	.47	.60	.72
	1200	565	41.5	12.2	2.96	.47	.60	.72	40.0	11.7	3.28	.48	.61	.74	38.5	11.3	3.63	.48	.62	.75	37.2	10.9	4.04	.49	.63	.77
	1400	660	42.5	12.5	2.99	.49	.62	.76	41.5	12.2	3.30	.49	.63	.77	40.0	11.7	3.66	.49	.64	.79	38.0	11.1	4.07	.50	.65	.81
HS29-036 - C33-38A/B COOLING CAPACITY - TXV Systems Only																										
63°F (17°C)	1000	470	36.2	10.6	2.84	.75	.87	.99	34.8	10.2	3.15	.76	.89	1.00	33.4	9.8	3.50	.77	.91	1.00	32.0	9.4	3.89	.78	.93	1.00
	1200	565	37.6	11.0	2.87	.79	.93	1.00	36.2	10.6	3.18	.80	.95	1.00	34.8	10.2	3.53	.81	.97	1.00	33.2	9.7	3.93	.83	.99	1.00
	1400	660	38.5	11.3	2.90	.82	.98	1.00	37.4	11.0	3.21	.84	.99	1.00	36.0	10.6	3.56	.86	1.00	1.00	34.6	10.1	3.97	.88	1.00	1.00
67°F (19°C)	1000	470	38.0	11.1	2.89	.60	.72	.84	37.0	10.8	3.20	.61	.73	.86	35.6	10.4	3.55	.61	.75	.87	34.0	10.0	3.95	.62	.76	.89
	1200	565	39.5	11.6	2.92	.63	.76	.89	38.5	11.3	3.23	.63	.77	.91	36.8	10.8	3.58	.64	.79	.93	35.4	10.4	3.99	.65	.81	.96
	1400	660	41.0	12.0	2.94	.65	.80	.95	39.5	11.6	3.25	.66	.81	.97	37.8	11.1	3.61	.67	.83	.99	36.2	10.6	4.01	.68	.85	1.00
71°F (22°C)	1000	470	40.5	11.9	2.93	.47	.58	.70	39.0	11.4	3.24	.47	.59	.71	37.4	11.0	3.60	.47	.60	.72	36.0	10.6	4.01	.47	.61	.73
	1200	565	42.0	12.3	2.97	.48	.61	.74	40.5	11.9	3.28	.48	.62	.75	39.0	11.4	3.64	.48	.62	.76	37.4	11.0	4.04	.49	.64	.78
	1400	660	43.0	12.6	2.99	.49	.64	.77	41.5	12.2	3.31	.49	.64	.79	40.0	11.7	3.67	.50	.65	.81	38.5	11.3	4.07	.50	.67	.83
HS29-036 - C33-36A/B with G60UHV-36A/B COOLING CAPACITY - TXV Systems Only																										
63°F (17°C)	1075	505	35.2	10.3	2.82	.76	.90	1.00	33.8	9.9	3.12	.78	.91	1.00	32.6	9.6	3.47	.79	.93	1.00	31.0	9.1	3.87	.81	.96	1.00
	1195	565	35.8	10.5	2.83	.78	.93	1.00	34.6	10.1	3.14	.80	.95	1.00	33.2	9.7	3.49	.81	.97	1.00	31.8	9.3	3.89	.83	.99	1.00
	1315	620	36.4	10.7	2.85	.81	.96	1.00	35.2	10.3	3.16	.82	.98	1.00	33.8	9.9	3.50	.84	.99	1.00	32.4	9.5	3.91	.86	1.00	1.00
67°F (19°C)	1075	505	36.8	10.8	2.86	.61	.74	.86	35.6	10.4	3.17	.62	.75	.88	34.4	10.1	3.52	.63	.77	.90	32.8	9.6	3.92	.64	.78	.92
	1195	565	37.6	11.0	2.87	.62	.76	.90	36.4	10.7	3.18	.63	.77	.91	35.0	10.3	3.54	.64	.79	.93	33.6	9.8	3.94	.65	.81	.96
	1315	620	38.5	11.3	2.89	.64	.78	.92	37.0	10.8	3.20	.65	.80	.94	35.6	10.4	3.55	.66	.81	.97	34.2	10.0	3.95	.67	.83	.99
71°F (22°C)	1075	505	38.5	11.3	2.89	.47	.60	.72	37.2	10.9	3.20	.48	.60	.73	35.8	10.5	3.56	.48	.61	.74	34.4	10.1	3.96	.48	.62	.76
	1195	565	39.5	11.6	2.91	.48	.61	.74	38.0	11.1	3.22	.48	.62	.75	36.6	10.7	3.58	.49	.63	.77	35.2	10.3	3.98	.49	.64	.78
	1315	620	40.0	11.7	2.93	.48	.63	.76	38.5	11.3	3.24	.49	.63	.77	37.4	11.0	3.59	.49	.64	.79	35.8	10.5	4.00	.50	.66	.81
HS29-036 - C33-36B with G61MPV-36B COOLING CAPACITY - TXV Systems Only																										
63°F (17°C)	1055	500	35.0	10.3	2.82	.76	.89	1.00	33.8	9.9	3.12	.77	.91	1.00	32.4	9.5	3.47	.78	.93	1.00	31.0	9.1	3.86	.80	.95	1.00
	1195	565	35.8	10.5	2.83	.78	.93	1.00	34.6	10.1	3.14	.80	.95	1.00	33.2	9.7	3.49	.81	.97	1.00	31.8	9.3	3.89	.83	.99	1.00
	1325	625	36.6	10.7	2.85	.81	.96	1.00	35.2	10.3	3.16	.82	.98	1.00	34.0	10.0	3.51	.84	.99	1.00	32.6	9.6	3.91	.86	1.00	1.00
67°F (19°C)	1055	500	36.6	10.7	2.85	.61	.73	.86	35.4	10.4	3.16	.61	.75	.87	34.0	10.0	3.51	.62	.76	.89	32.6	9.6	3.91	.63	.77	.91
	1195	565	37.6	11.0	2.87	.62	.76	.90	36.4	10.7	3.18	.63	.78	.91	35.0	10.3	3.54	.64	.79	.94	33.6	9.8	3.94	.65	.81	.96
	1325	625	38.5	11.3	2.89	.64	.79	.93	37.2	10.9	3.20	.65	.80	.95	35.8	10.5	3.55	.66	.82	.97	34.2	10.0	3.95	.67	.84	.99
71°F (22°C)	1055	500	38.0	11.1	2.89	.47	.59	.71	37.0	10.8	3.20	.47	.60	.72	35.6	10.4	3.55	.47	.61	.74	34.2	10.0	3.96	.48	.62	.75
	1195	565	39.5	11.6	2.91	.48	.61	.74	38.0	11.1	3.22	.48	.62	.75	36.6	10.7	3.58	.49	.63	.77	35.2	10.3	3.98	.49	.64	.78
	1325	625	40.0	11.7	2.93	.49	.63	.76	39.0	11.4	3.24	.49	.64	.78	37.4	11.0	3.60	.49	.65	.80	36.0	10.6	4.00	.50	.66	.81

NOTE - For Temperatures and Capacities not shown in tables, see bulletin - Cooling Unit Rating Table Correction Factor Data in Miscellaneous Engineering Data section.

Entering Wet Bulb Temperature	Total Air Volume		Outdoor Air Temperature Entering Outdoor Coil																							
			85°F (29°C)						95°F (35°C)						105°F (41°C)						115°F (46°C)					
			Total Cooling Capacity		Comp Motor kW Input	Sensible To Total Ratio (S/T) Dry Bulb			Total Cooling Capacity		Comp Motor kW Input	Sensible To Total Ratio (S/T) Dry Bulb			Total Cooling Capacity		Comp Motor kW Input	Sensible To Total Ratio (S/T) Dry Bulb			Total Cooling Capacity		Comp Motor kW Input	Sensible To Total Ratio (S/T) Dry Bulb		
	cfm	L/s	kBtuh	kW		75°F 24°C	80°F 27°C	85°F 29°C	kBtuh	kW		75°F 24°C	80°F 27°C	85°F 29°C	kBtuh	kW		75°F 24°C	80°F 27°C	85°F 29°C	kBtuh	kW		75°F 24°C	80°F 27°C	85°F 29°C
HS29-036 - C33-36C wtih G61MPV-36C-090 COOLING CAPACITY - TXV Systems Only																										
63°F (17°C)	1050	495	34.8	10.2	2.82	.76	.89	1.00	33.6	9.8	3.12	.77	.91	1.00	32.2	9.4	3.47	.78	.93	1.00	31.0	9.1	3.86	.80	.95	1.00
	1195	565	35.8	10.5	2.83	.78	.93	1.00	34.6	10.1	3.14	.80	.95	1.00	33.2	9.7	3.49	.81	.97	1.00	31.8	9.3	3.89	.83	.99	1.00
	1300	615	36.4	10.7	2.85	.80	.96	1.00	35.2	10.3	3.16	.82	.98	1.00	33.8	9.9	3.51	.84	.99	1.00	32.4	9.5	3.91	.86	1.00	1.00
67°F (19°C)	1050	495	36.6	10.7	2.85	.61	.73	.86	35.4	10.4	3.16	.61	.74	.87	34.0	10.0	3.51	.62	.76	.89	32.6	9.6	3.91	.63	.77	.91
	1195	565	37.6	11.0	2.87	.62	.76	.90	36.4	10.7	3.18	.63	.77	.91	35.0	10.3	3.54	.64	.79	.93	33.6	9.8	3.94	.65	.81	.96
	1300	615	38.5	11.3	2.89	.64	.78	.92	37.0	10.8	3.20	.65	.80	.94	35.6	10.4	3.55	.66	.81	.97	34.2	10.0	3.95	.67	.83	.99
71°F (22°C)	1050	495	38.0	11.1	2.89	.47	.59	.71	37.0	10.8	3.20	.47	.60	.72	35.6	10.4	3.55	.47	.61	.73	34.2	10.0	3.96	.48	.62	.75
	1195	565	39.5	11.6	2.91	.48	.61	.74	38.0	11.1	3.22	.48	.62	.75	36.6	10.7	3.58	.49	.63	.77	35.2	10.3	3.98	.49	.64	.78
	1300	615	40.0	11.7	2.93	.49	.63	.76	38.5	11.3	3.24	.49	.63	.77	37.4	11.0	3.59	.49	.64	.79	35.8	10.5	4.00	.50	.66	.81
HS29-036 - C33-38B with G61MPV-36B COOLING CAPACITY - TXV Systems Only																										
63°F (17°C)	1055	500	36.4	10.7	2.85	.75	.88	1.00	35.2	10.3	3.16	.76	.90	1.00	33.8	9.9	3.50	.78	.92	1.00	32.2	9.4	3.90	.79	.94	1.00
	1195	565	37.4	11.0	2.87	.78	.92	1.00	36.2	10.6	3.18	.79	.94	1.00	34.6	10.1	3.53	.81	.96	1.00	33.2	9.7	3.93	.83	.99	1.00
	1325	625	38.5	11.3	2.89	.80	.96	1.00	37.0	10.8	3.20	.82	.98	1.00	35.4	10.4	3.55	.84	1.00	1.00	34.0	10.0	3.95	.86	1.00	1.00
67°F (19°C)	1055	500	38.5	11.3	2.90	.60	.73	.85	37.2	10.9	3.21	.61	.74	.87	35.8	10.5	3.56	.61	.75	.89	34.4	10.1	3.96	.62	.77	.91
	1195	565	39.5	11.6	2.92	.62	.76	.89	38.0	11.1	3.23	.62	.77	.91	36.8	10.8	3.58	.63	.78	.93	35.2	10.3	3.98	.65	.80	.95
	1325	625	40.5	11.9	2.93	.63	.78	.92	39.0	11.4	3.24	.64	.80	.95	37.4	11.0	3.60	.65	.81	.97	35.8	10.5	4.00	.66	.83	.99
71°F (22°C)	1055	500	40.5	11.9	2.94	.46	.58	.71	39.5	11.6	3.25	.47	.60	.71	37.8	11.1	3.61	.47	.60	.73	36.2	10.6	4.01	.47	.61	.74
	1195	565	41.5	12.2	2.96	.47	.60	.73	40.0	11.7	3.28	.48	.61	.75	39.0	11.4	3.63	.48	.62	.76	37.2	10.9	4.04	.48	.63	.78
	1325	625	42.5	12.5	2.98	.48	.62	.76	41.0	12.0	3.30	.48	.63	.77	39.5	11.6	3.65	.49	.64	.79	38.0	11.1	4.06	.49	.65	.81
HS29-036 - C33-38A/B with G60UHV-36A/B COOLING CAPACITY - TXV Systems Only																										
63°F (17°C)	1075	505	36.6	10.7	2.85	.76	.89	1.00	35.4	10.4	3.16	.77	.91	1.00	34.0	10.0	3.51	.78	.93	1.00	32.4	9.5	3.91	.80	.95	1.00
	1195	565	37.4	11.0	2.87	.78	.92	1.00	36.0	10.6	3.18	.79	.94	1.00	34.6	10.1	3.53	.81	.96	1.00	33.2	9.7	3.93	.83	.98	1.00
	1315	620	38.0	11.1	2.89	.80	.95	1.00	36.8	10.8	3.19	.82	.97	1.00	35.4	10.4	3.55	.83	.99	1.00	33.8	9.9	3.94	.85	1.00	1.00
67°F (19°C)	1075	505	39.0	11.4	2.90	.60	.73	.86	37.4	11.0	3.21	.61	.75	.88	36.0	10.6	3.56	.62	.76	.89	34.6	10.1	3.96	.63	.77	.91
	1195	565	39.5	11.6	2.92	.62	.76	.89	38.0	11.1	3.23	.62	.77	.91	36.8	10.8	3.58	.63	.78	.93	35.2	10.3	3.98	.64	.80	.95
	1315	620	40.0	11.7	2.93	.63	.78	.92	39.0	11.4	3.24	.64	.79	.94	37.4	11.0	3.60	.65	.81	.96	35.8	10.5	4.00	.66	.83	.98
71°F (22°C)	1075	505	41.0	12.0	2.94	.47	.59	.71	39.5	11.6	3.26	.47	.60	.72	38.0	11.1	3.62	.47	.61	.74	36.4	10.7	4.02	.47	.61	.75
	1195	565	41.5	12.2	2.96	.47	.60	.73	40.0	11.7	3.28	.48	.61	.75	39.0	11.4	3.63	.48	.62	.76	37.2	10.9	4.04	.48	.63	.78
	1315	620	42.5	12.5	2.98	.48	.62	.76	41.0	12.0	3.30	.48	.63	.77	39.5	11.6	3.65	.49	.64	.79	37.8	11.1	4.06	.49	.65	.80
HS29-036 - CR26-36N-F ONLY COOLING CAPACITY - TXV Systems Only																										
63°F (17°C)	800	380	33.0	9.7	2.78	.71	.83	.94	32.0	9.4	3.08	.72	.84	.95	30.6	9.0	3.43	.73	.86	.97	29.4	8.6	3.83	.74	.87	.99
	900	425	34.0	10.0	2.80	.73	.86	.97	32.8	9.6	3.10	.74	.87	.98	31.6	9.3	3.45	.75	.89	.99	30.2	8.9	3.84	.77	.91	1.00
	1000	470	35.0	10.3	2.81	.75	.88	.99	33.6	9.8	3.12	.76	.90	1.00	32.2	9.4	3.47	.77	.92	1.00	30.8	9.0	3.86	.79	.94	1.00
67°F (19°C)	800	380	35.0	10.3	2.82	.58	.69	.79	33.8	9.9	3.12	.58	.69	.81	32.6	9.6	3.47	.59	.71	.82	31.2	9.1	3.87	.59	.72	.84
	900	425	36.0	10.6	2.84	.59	.71	.82	34.8	10.2	3.15	.59	.72	.84	33.4	9.8	3.50	.60	.73	.85	32.0	9.4	3.90	.61	.74	.87
	1000	470	36.8	10.8	2.86	.60	.73	.85	35.6	10.4	3.17	.61	.74	.87	34.2	10.0	3.51	.61	.75	.88	32.6	9.6	3.91	.62	.77	.90
71°F (22°C)	800	380	36.8	10.8	2.85	.45	.56	.66	35.6	10.4	3.16	.45	.56	.67	34.2	10.0	3.52	.46	.57	.68	33.0	9.7	3.92	.46	.58	.69
	900	425	37.8	11.1	2.88	.46	.57	.68	36.6	10.7	3.19	.46	.58	.69	35.2	10.3	3.54	.46	.58	.70	33.8	9.9	3.94	.47	.59	.72
	1000	470	39.0	11.4	2.90	.47	.59	.70	37.4	11.0	3.21	.47	.59	.71	36.0	10.6	3.56	.47	.60	.73	34.6	10.1	3.97	.47	.61	.74
HS29-036 - CR26-36W-F ONLY COOLING CAPACITY - TXV Systems Only																										
63°F (17°C)	1000	470	34.8	10.2	2.82	.75	.88	.99	33.6	9.8	3.12	.76	.90	1.00	32.2	9.4	3.46	.77	.91	1.00	30.8	9.0	3.86	.79	.93	1.00
	1100	520	35.6	10.4	2.83	.77	.91	1.00	34.4	10.1	3.14	.78	.93	1.00	33.0	9.7	3.48	.80	.95	1.00	31.4	9.2	3.88	.81	.97	1.00
	1200	565	36.2	10.6	2.84	.79	.93	1.00	35.0	10.3	3.15	.80	.95	1.00	33.4	9.8	3.50	.82	.97	1.00	32.0	9.4	3.90	.84	.99	1.00
67°F (19°C)	1000	470	36.8	10.8	2.86	.60	.72	.85	35.6	10.4	3.16	.60	.73	.86	34.0	10.0	3.51	.61	.75	.88	32.6	9.6	3.91	.62	.76	.90
	1100	520	37.6	11.0	2.87	.61	.75	.88	36.2	10.6	3.18	.62	.76	.89	34.8	10.2	3.53	.63	.77	.91	33.4	9.8	3.93	.64	.79	.93
	1200	565	38.0	11.1	2.88	.62	.76	.90	36.8	10.8	3.19	.63	.78	.92	35.4	10.4	3.55	.64	.79	.94	33.8	9.9	3.94	.65	.81	.96
71°F (22°C)	1000	470	38.5	11.3	2.90	.46	.58	.70	37.4	11.0	3.21	.46	.59	.71	36.0	10.6	3.56	.46	.60	.72	34.4	10.1	3.97	.47	.61	.74
	1100	520	39.5	11.6	2.92	.47	.60	.72	38.0	11.1	3.23	.47	.61	.74	36.8	10.8	3.58	.48	.61	.75	35.2	10.3	3.98	.48	.63	.77
	1200	565	40.0	11.7	2.93	.48	.61	.74	38.5	11.3	3.24	.48	.62	.75	37.2	10.9	3.59	.48	.63	.77	35.6	10.4	4.00	.48	.64	.79
HS29-036 - CR26-48N/W-F COOLING CAPACITY - TXV Systems Only																										
63°F (17°C)	900	425	34.4	10.1	2.81	.72	.84	.95	33.2	9.7	3.11	.73	.85	.97	32.2	9.4	3.46	.74	.87	.99	30.8	9.0	3.86	.76	.89	1.00
	1100	520	35.8	10.5	2.83	.76	.88	1.00	34.6	10.1	3.15	.77	.91	1.00	33.4	9.8	3.50	.78	.93	1.00	32.0	9.4	3.89	.80	.95	1.00
	1300	615	37.0	10.8	2.86	.79	.93	1.00	35.8	10.5	3.17	.80	.95	1.00	34.4	10.1	3.52	.82	.97	1.00	33.0	9.7	3.92	.84	.99	1.00
67°F (19°C)	900	425	36.2	10.6	2.84	.59	.70	.80	35.2	10.3	3.16	.59	.71	.82	34.0	10.0	3.51	.60	.72	.83	32.6	9.6	3.91	.60	.73	.85
	1100	520	37.8	11.1	2.88	.61	.73	.85	36.6	10.7	3.19	.62	.74	.87	35.4	10.4	3.55	.62	.76	.89	34.0	10.0	3.95	.63	.77	.91
	1300	615	39.0	11.4	2.90	.63	.76	.90	37.8	11.1	3.22	.64	.78	.92	36.4	10.7	3.57	.65	.80	.94	35.0	10.3	3.97	.66	.81	.97
71°F (22°C)	900	425	38.0	11.1	2.89	.46	.57	.67	37.0	10.8	3.20	.45	.58	.68	35.8	10.5	3.55	.46	.58	.69	34.4	10.1	3.96	.47	.58	.71
	1100	520	40.0	11.7	2.92	.47	.59	.71	38.5	11.3	3.24	.47	.60	.72	37.2	10.9	3.59	.47	.61	.73	36.0	10.6	4.01	.48	.62	.75
	1300	615	41.0	12.0	2.95	.48	.61	.74	40.0	11.7	3.27	.48	.62	.76	38.5	11.3	3.62	.49	.63	.77	37.0	10.8	4.03	.49	.65	.79
HS29-036 - CR26-36W-F with G61MPV-36B COOLING CAPACITY - TXV Systems Only																										
63°F (17°C)	1055	500	35.2	10.3	2.82	.76	.89	1.00	33.8	9.9	3.12	.77	.91	1.00	32.6	9.6	3.47	.78	.93	1.00	31.2	9.1	3.87	.80	.95	1.00
	1195	565	36.2	10.6	2.84	.79	.93	1.00	34.8	10.2	3.15	.80	.95	1.00	33.4	9.8	3.50	.81	.97	1.00	32.0	9.4	3.89	.83	.98	1.00
	1325	625	37.0	10.8	2.86	.81	.96	1.00	35.6	10.4	3.16	.83	.98	1.00	34.2	10.0	3.52	.85	.99	1.00	32.6	9.6	3.91	.87	1.00	1.00
67°F (19°C)	1055	500	37.2	10.9	2.86	.60	.73	.86	35.8	10.5	3.17	.61	.74	.88	34.4	10.1	3.52	.62	.76	.89	33.0	9.7	3.92	.63	.77	.91
	1195	565	38.0	11.1	2.88	.62	.76	.90	36.8	10.8	3.19	.63	.78	.92	35.2	10.3	3.55	.64	.79	.93	33.8	9.9	3.94	.65	.81	.96
	1325	625	39.0	11.4	2.90	.64	.79	.93	37.4	11.0	3.21	.65	.80	.95	36.0	10.6	3.56	.66	.82	.97	34.4	10.1	3.96	.67	.84	.99
71°F (22°C)	1055	500	39.0	11.4	2.90	.46	.59	.71	37.8	11.1	3.22	.46	.59	.72	36.4	10.7	3.57	.47	.60	.73	34.8	10.2	3.97	.47	.61	.75
	1195	565	40.0	11.7	2.93	.47	.61	.74	38.5	11.3	3.24	.48	.62	.75	37.2	10.9	3.59	.48	.62	.77	35.6	10.4	4.00	.48	.64	.78
	1325	625	41.0	12.0	2.94	.48	.63	.77	39.5	11.6	3.26	.49	.64	.78	37.8	11.1	3.61	.49	.65	.80	36.4	10.7	4.01	.49	.66	.82

NOTE - For Temperatures and Capacities not shown in tables, see bulletin - Cooling Unit Rating Table Correction Factor Data in Miscellaneous Engineering Data section.

Entering Wet Bulb Temperature	Total Air Volume		Outdoor Air Temperature Entering Outdoor Coil																							
			85°F (29°C)						95°F (35°C)						105°F (41°C)						115°F (46°C)					
			Total Cooling Capacity		Comp Motor kW Input	Sensible To Total Ratio (S/T) Dry Bulb			Total Cooling Capacity		Comp Motor kW Input	Sensible To Total Ratio (S/T) Dry Bulb			Total Cooling Capacity		Comp Motor kW Input	Sensible To Total Ratio (S/T) Dry Bulb			Total Cooling Capacity		Comp Motor kW Input	Sensible To Total Ratio (S/T) Dry Bulb		
	cfm	L/s	kBtuh	kW		75°F 24°C	80°F 27°C	85°F 29°C	kBtuh	kW		75°F 24°C	80°F 27°C	85°F 29°C	kBtuh	kW		75°F 24°C	80°F 27°C	85°F 29°C	kBtuh	kW		75°F 24°C	80°F 27°C	85°F 29°C
HS29-036 - CH33-36A/B/C-2F COOLING CAPACITY - TXV Systems Only																										
63°F (17°C)	950	450	34.0	10.0	2.80	.73	.85	.97	32.8	9.6	3.10	.74	.87	.99	31.6	9.3	3.45	.75	.88	1.00	30.2	8.9	3.85	.76	.90	1.00
	1050	495	34.6	10.1	2.81	.75	.88	1.00	33.4	9.8	3.11	.76	.89	1.00	32.2	9.4	3.46	.77	.91	1.00	30.8	9.0	3.86	.79	.93	1.00
	1150	545	35.4	10.4	2.82	.76	.90	1.00	34.0	10.0	3.13	.78	.92	1.00	32.8	9.6	3.48	.79	.94	1.00	31.4	9.2	3.88	.81	.96	1.00
67°F (19°C)	950	450	35.8	10.5	2.84	.59	.70	.82	34.6	10.1	3.15	.59	.71	.83	33.4	9.8	3.50	.60	.73	.85	32.0	9.4	3.90	.61	.74	.87
	1050	495	36.6	10.7	2.86	.60	.72	.84	35.4	10.4	3.16	.61	.73	.86	34.0	10.0	3.51	.61	.75	.88	32.8	9.6	3.91	.62	.76	.90
	1150	545	37.4	11.0	2.87	.61	.74	.87	36.0	10.6	3.18	.62	.75	.89	34.6	10.1	3.53	.63	.77	.91	33.2	9.7	3.93	.63	.78	.93
71°F (22°C)	950	450	37.8	11.1	2.88	.46	.57	.68	36.6	10.7	3.19	.47	.58	.69	35.2	10.3	3.54	.46	.59	.70	33.8	9.9	3.95	.47	.59	.71
	1050	495	38.5	11.3	2.90	.47	.59	.70	37.4	11.0	3.21	.47	.59	.71	36.0	10.6	3.56	.47	.60	.72	34.6	10.1	3.96	.47	.61	.74
	1150	545	39.5	11.6	2.91	.47	.60	.72	38.0	11.1	3.22	.48	.61	.73	36.6	10.7	3.58	.48	.61	.74	35.2	10.3	3.98	.48	.62	.76
HS29-036 - CH23-41 COOLING CAPACITY - TXV Systems Only																										
63°F (17°C)	1000	470	34.4	10.1	2.80	.74	.86	.98	33.2	9.7	3.11	.75	.88	.99	32.0	9.4	3.46	.76	.90	1.00	30.6	9.0	3.86	.78	.92	1.00
	1200	565	35.8	10.5	2.83	.77	.91	1.00	34.6	10.1	3.14	.79	.93	1.00	33.2	9.7	3.49	.80	.95	1.00	31.8	9.3	3.89	.82	.97	1.00
	1400	660	37.0	10.8	2.86	.81	.96	1.00	35.6	10.4	3.17	.82	.98	1.00	34.4	10.1	3.52	.84	.99	1.00	33.2	9.7	3.93	.86	1.00	1.00
67°F (19°C)	1000	470	36.6	10.7	2.85	.60	.72	.83	35.4	10.4	3.16	.60	.73	.85	34.0	10.0	3.51	.61	.74	.86	32.8	9.6	3.91	.62	.75	.88
	1200	565	38.0	11.1	2.88	.62	.75	.88	36.8	10.8	3.19	.63	.76	.90	35.4	10.4	3.55	.64	.78	.92	34.0	10.0	3.95	.65	.80	.94
	1400	660	39.0	11.4	2.91	.64	.79	.93	37.8	11.1	3.21	.65	.80	.95	36.4	10.7	3.57	.66	.82	.97	34.8	10.2	3.98	.67	.84	.99
71°F (22°C)	1000	470	39.0	11.4	2.90	.46	.58	.69	37.4	11.0	3.21	.47	.59	.70	36.2	10.6	3.56	.47	.60	.72	34.8	10.2	3.97	.47	.61	.73
	1200	565	40.5	11.9	2.93	.48	.61	.73	39.0	11.4	3.25	.47	.61	.74	37.6	11.0	3.60	.49	.62	.76	36.0	10.6	4.00	.49	.63	.77
	1400	660	41.5	12.2	2.95	.49	.63	.77	40.0	11.7	3.27	.49	.64	.78	38.5	11.3	3.63	.49	.65	.80	37.0	10.8	4.03	.50	.66	.82
HS29-036 - CH33-48C-2F COOLING CAPACITY - TXV Systems Only																										
63°F (17°C)	1000	470	36.4	10.7	2.85	.74	.87	.98	35.2	10.3	3.16	.75	.88	1.00	33.8	9.9	3.50	.76	.90	1.00	32.2	9.4	3.90	.78	.92	1.00
	1200	565	38.0	11.1	2.88	.77	.92	1.00	36.6	10.7	3.19	.79	.93	1.00	35.0	10.3	3.54	.80	.96	1.00	33.6	9.8	3.94	.82	.98	1.00
	1400	660	39.0	11.4	2.91	.81	.96	1.00	37.6	11.0	3.21	.83	.98	1.00	36.2	10.6	3.57	.84	1.00	1.00	34.8	10.2	3.97	.86	1.00	1.00
67°F (19°C)	1000	470	38.5	11.3	2.89	.60	.72	.83	37.2	10.9	3.21	.60	.73	.85	35.8	10.5	3.56	.61	.74	.86	34.4	10.1	3.96	.62	.75	.88
	1200	565	40.0	11.7	2.93	.62	.75	.88	38.5	11.3	3.23	.62	.76	.90	37.2	10.9	3.59	.63	.78	.92	35.6	10.4	4.00	.64	.80	.94
	1400	660	41.0	12.0	2.95	.64	.79	.93	39.5	11.6	3.26	.65	.80	.95	38.0	11.1	3.62	.66	.82	.97	36.6	10.7	4.02	.67	.84	.99
71°F (22°C)	1000	470	40.5	11.9	2.94	.47	.58	.69	39.0	11.4	3.25	.47	.59	.70	37.8	11.1	3.61	.47	.60	.72	36.2	10.6	4.01	.47	.60	.73
	1200	565	42.0	12.3	2.97	.48	.60	.73	40.5	11.9	3.29	.48	.61	.74	39.0	11.4	3.65	.48	.62	.76	37.6	11.0	4.05	.49	.63	.77
	1400	660	43.5	12.7	3.00	.48	.62	.76	42.0	12.3	3.31	.49	.64	.78	40.5	11.9	3.68	.49	.65	.80	38.5	11.3	4.08	.50	.66	.81
HS29-036 - CH23-51 COOLING CAPACITY - TXV Systems Only																										
63°F (17°C)	1000	470	35.4	10.4	2.82	.74	.87	.98	34.2	10.0	3.13	.75	.88	.99	32.8	9.6	3.48	.76	.90	1.00	31.4	9.2	3.88	.78	.92	1.00
	1100	520	36.2	10.6	2.84	.76	.90	1.00	34.8	10.2	3.15	.77	.91	1.00	33.4	9.8	3.50	.79	.93	1.00	32.0	9.4	3.89	.80	.95	1.00
	1200	565	36.8	10.8	2.86	.78	.92	1.00	35.4	10.4	3.16	.79	.94	1.00	34.0	10.0	3.51	.81	.96	1.00	32.6	9.6	3.91	.82	.98	1.00
67°F (19°C)	1000	470	37.4	11.0	2.87	.60	.72	.83	36.2	10.6	3.18	.60	.73	.85	34.8	10.2	3.53	.61	.74	.87	33.4	9.8	3.93	.62	.75	.89
	1100	520	38.5	11.3	2.89	.61	.73	.86	37.0	10.8	3.20	.62	.75	.88	35.6	10.4	3.55	.62	.76	.90	34.0	10.0	3.95	.63	.78	.92
	1200	565	39.0	11.4	2.90	.62	.75	.89	37.6	11.0	3.21	.63	.77	.91	36.2	10.6	3.57	.64	.78	.93	34.6	10.1	3.97	.65	.80	.95
71°F (22°C)	1000	470	39.5	11.6	2.91	.46	.58	.69	38.0	11.1	3.23	.46	.59	.70	36.8	10.8	3.58	.46	.60	.72	35.4	10.4	3.99	.47	.60	.73
	1100	520	40.5	11.9	2.93	.47	.59	.71	39.0	11.4	3.25	.47	.60	.72	37.6	11.0	3.60	.47	.61	.74	36.0	10.6	4.00	.47	.62	.75
	1200	565	41.0	12.0	2.95	.48	.61	.73	39.5	11.6	3.26	.47	.61	.74	38.0	11.1	3.62	.48	.62	.76	36.6	10.7	4.02	.48	.63	.78
HS29-036 - CH33-36A/B-2F with G60UHV-36A/B COOLING CAPACITY - TXV Systems Only																										
63°F (17°C)	1075	505	34.8	10.2	2.82	.75	.88	1.00	33.6	9.8	3.12	.76	.90	1.00	32.2	9.4	3.47	.77	.91	1.00	30.8	9.0	3.87	.79	.94	1.00
	1195	565	35.4	10.4	2.83	.77	.91	1.00	34.2	10.0	3.13	.78	.93	1.00	32.8	9.6	3.48	.79	.95	1.00	31.6	9.3	3.88	.81	.97	1.00
	1315	620	36.2	10.6	2.84	.79	.94	1.00	34.8	10.2	3.15	.80	.96	1.00	33.4	9.8	3.50	.82	.98	1.00	31.8	9.3	3.89	.84	1.00	1.00
67°F (19°C)	1075	505	36.8	10.8	2.86	.60	.72	.85	35.6	10.4	3.16	.61	.73	.86	34.2	10.0	3.52	.61	.75	.88	32.8	9.6	3.92	.62	.76	.90
	1195	565	37.6	11.0	2.87	.61	.75	.88	36.2	10.6	3.18	.62	.76	.89	34.8	10.2	3.53	.63	.77	.91	33.4	9.8	3.94	.64	.79	.93
	1315	620	38.0	11.1	2.89	.63	.77	.90	36.8	10.8	3.20	.63	.78	.92	35.4	10.4	3.55	.64	.79	.94	34.0	10.0	3.95	.65	.81	.97
71°F (22°C)	1075	505	38.5	11.3	2.90	.47	.59	.70	37.4	11.0	3.21	.47	.59	.71	36.0	10.6	3.56	.47	.60	.72	34.6	10.1	3.97	.47	.61	.74
	1195	565	39.5	11.6	2.92	.47	.60	.72	38.0	11.1	3.23	.48	.61	.74	36.8	10.8	3.58	.48	.61	.75	35.4	10.4	3.99	.48	.62	.76
	1315	620	40.5	11.9	2.93	.48	.61	.74	39.0	11.4	3.24	.48	.62	.76	37.4	11.0	3.60	.48	.63	.77	35.8	10.5	4.00	.49	.64	.79
HS29-036 - CH33-36B-2F with G61MPV-36B COOLING CAPACITY - TXV Systems Only																										
63°F (17°C)	1055	500	34.6	10.1	2.81	.74	.87	1.00	33.4	9.8	3.11	.75	.89	1.00	32.0	9.4	3.46	.77	.91	1.00	30.8	9.0	3.86	.78	.93	1.00
	1195	565	35.6	10.4	2.83	.77	.91	1.00	34.2	10.0	3.13	.78	.93	1.00	32.8	9.6	3.48	.80	.95	1.00	31.6	9.3	3.88	.81	.97	1.00
	1325	625	36.2	10.6	2.84	.79	.94	1.00	34.8	10.2	3.15	.81	.96	1.00	33.6	9.8	3.50	.82	.98	1.00	32.0	9.4	3.90	.84	1.00	1.00
67°F (19°C)	1055	500	36.6	10.7	2.85	.60	.72	.84	35.4	10.4	3.16	.60	.73	.85	34.0	10.0	3.51	.61	.74	.87	32.6	9.6	3.91	.62	.76	.89
	1195	565	37.6	11.0	2.87	.61	.75	.88	36.2	10.6	3.18	.62	.76	.89	34.8	10.2	3.53	.63	.77	.91	33.4	9.8	3.93	.64	.79	.93
	1325	625	38.5	11.3	2.89	.63	.77	.91	37.0	10.8	3.20	.64	.78	.93	35.6	10.4	3.55	.64	.80	.95	34.0	10.0	3.95	.65	.82	.97
71°F (22°C)	1055	500	38.5	11.3	2.89	.46	.58	.70	37.2	10.9	3.21	.46	.59	.71	36.0	10.6	3.56	.46	.59	.72	34.4	10.1	3.96	.47	.60	.73
	1195	565	39.5	11.6	2.92	.47	.60	.72	38.0	11.1	3.23	.48	.61	.74	36.8	10.8	3.59	.48	.61	.75	35.4	10.4	3.99	.48	.62	.76
	1325	625	40.5	11.9	2.93	.48	.61	.75	39.0	11.4	3.25	.48	.62	.76	37.6	11.0	3.60	.49	.63	.77	36.0	10.6	4.01	.49	.64	.79
HS29-036 - CH33-36C-2F with G61MPV-36C-090 COOLING CAPACITY - TXV Systems Only																										
63°F (17°C)	1050	495	34.6	10.1	2.81	.74	.87	.99	33.4	9.8	3.11	.75	.89	1.00	32.0	9.4	3.46	.76	.90	1.00	30.6	9.0	3.86	.78	.93	1.00
	1195	565	35.4	10.4	2.83	.77	.91	1.00	34.2	10.0	3.13	.78	.93	1.00	32.8	9.6	3.48	.79	.95	1.00	31.6	9.3	3.88	.81	.97	1.00
	1300	615	36.0	10.6	2.84	.79	.94	1.00	34.8	10.2	3.15	.80	.96	1.00	33.4	9.8	3.49	.82	.98	1.00	32.0	9.4	3.89	.84	1.00	1.00
67°F (19°C)	1050	495	36.6	10.7	2.85	.60	.72	.84	35.4	10.4	3.16	.60	.73	.85	34.0	10.0	3.51	.61	.74	.87	32.6	9.6	3.91	.61	.75	.89
	1195	565	37.6	11.0	2.87	.61	.75	.88	36.2	10.6	3.18	.62	.76	.89	34.8	10.2	3.53	.63	.77	.91	33.4	9.8	3.94	.64	.79	.93
	1300	615	38.0	11.1	2.89	.63	.77	.90	36.8	10.8	3.19	.63	.78	.92	35.4	10.4	3.55	.64	.79	.94	34.0	10.0	3.95	.65	.81	.97
71°F (22°C)	1050	495	38.5	11.3	2.89	.46	.58	.69	37.2	10.9	3.21	.46	.59	.70	35.8	10.5	3.56	.46	.59	.72	34.4	10.1	3.96	.47	.60	.73
	1195	565	39.5	11.6	2.92	.47	.60	.72	38.0	11.1	3.23	.48	.61	.74	36.8	10.8	3.58	.48	.61	.75	35.4	10.4	3.99	.48	.62	.76
	1300	615	40.0	11.7	2.93	.48	.61	.74	39.0	11.4	3.24	.48	.62	.76	37.4	11.0	3.60	.48	.63	.77	35.8	10.5	4.00	.49	.64	.79

NOTE - For Temperatures and Capacities not shown in tables, see bulletin - Cooling Unit Rating Table Correction Factor Data in Miscellaneous Engineering Data section.

Entering Wet Bulb Temperature	Total Air Volume		Outdoor Air Temperature Entering Outdoor Coil																							
			85°F (29°C)						95°F (35°C)						105°F (41°C)						115°F (46°C)					
			Total Cooling Capacity		Comp Motor kW Input	Sensible To Total Ratio (S/T) Dry Bulb			Total Cooling Capacity		Comp Motor kW Input	Sensible To Total Ratio (S/T) Dry Bulb			Total Cooling Capacity		Comp Motor kW Input	Sensible To Total Ratio (S/T) Dry Bulb			Total Cooling Capacity		Comp Motor kW Input	Sensible To Total Ratio (S/T) Dry Bulb		
	cfm	L/s	kBtuh	kW		75°F 24°C	80°F 27°C	85°F 29°C	kBtuh	kW		75°F 24°C	80°F 27°C	85°F 29°C	kBtuh	kW		75°F 24°C	80°F 27°C	85°F 29°C	kBtuh	kW		75°F 24°C	80°F 27°C	85°F 29°C
HS29-036 - CH33-42B-2F with G60UHV-36B-090 COOLING CAPACITY - TXV Systems Only																										
63°F (17°C)	1030	485	35.8	10.5	2.83	.73	.86	.99	34.6	10.1	3.14	.75	.88	1.00	33.2	9.7	3.49	.76	.90	1.00	31.8	9.3	3.89	.77	.92	1.00
	1145	540	36.6	10.7	2.85	.76	.89	1.00	35.4	10.4	3.16	.77	.91	1.00	34.0	10.0	3.51	.78	.93	1.00	32.4	9.5	3.91	.80	.95	1.00
	1260	595	37.2	10.9	2.86	.78	.92	1.00	36.0	10.6	3.17	.79	.94	1.00	34.6	10.1	3.52	.80	.96	1.00	33.0	9.7	3.92	.82	.98	1.00
67°F (19°C)	1030	485	37.8	11.1	2.88	.59	.71	.83	36.6	10.7	3.19	.59	.72	.85	35.2	10.3	3.55	.60	.73	.86	33.8	9.9	3.94	.61	.75	.88
	1145	540	38.5	11.3	2.90	.60	.73	.86	37.4	11.0	3.21	.61	.74	.88	36.0	10.6	3.56	.61	.76	.89	34.4	10.1	3.96	.62	.77	.92
	1260	595	39.5	11.6	2.91	.62	.75	.89	38.0	11.1	3.22	.62	.76	.91	36.6	10.7	3.58	.63	.78	.93	35.2	10.3	3.98	.64	.80	.95
71°F (22°C)	1030	485	40.0	11.7	2.92	.46	.57	.69	38.5	11.3	3.24	.46	.58	.70	37.2	10.9	3.59	.46	.59	.71	35.8	10.5	4.00	.46	.59	.72
	1145	540	40.5	11.9	2.94	.47	.59	.71	39.5	11.6	3.26	.47	.60	.72	38.0	11.1	3.61	.47	.60	.73	36.4	10.7	4.02	.47	.61	.75
	1260	595	41.5	12.2	2.96	.47	.60	.73	40.0	11.7	3.27	.47	.61	.74	38.5	11.3	3.63	.47	.61	.76	37.0	10.8	4.03	.48	.63	.77
HS29-036 - CH33-42B-2F with G61MPV-36B COOLING CAPACITY - TXV Systems Only																										
63°F (17°C)	1055	500	36.0	10.6	2.84	.74	.87	.99	34.8	10.2	3.15	.75	.89	1.00	33.4	9.8	3.49	.77	.91	1.00	32.0	9.4	3.89	.78	.93	1.00
	1195	565	37.0	10.8	2.86	.77	.91	1.00	35.6	10.4	3.17	.78	.93	1.00	34.2	10.0	3.52	.79	.95	1.00	32.8	9.6	3.91	.81	.97	1.00
	1325	625	37.8	11.1	2.88	.79	.94	1.00	36.4	10.7	3.18	.80	.96	1.00	35.0	10.3	3.53	.82	.98	1.00	33.4	9.8	3.94	.84	1.00	1.00
67°F (19°C)	1055	500	38.0	11.1	2.88	.59	.71	.84	36.8	10.8	3.19	.60	.73	.85	35.4	10.4	3.55	.61	.74	.87	34.0	10.0	3.95	.61	.75	.89
	1195	565	39.0	11.4	2.91	.61	.74	.87	37.8	11.1	3.22	.62	.76	.89	36.4	10.7	3.57	.62	.77	.91	34.8	10.2	3.97	.63	.79	.93
	1325	625	40.0	11.7	2.92	.63	.77	.91	38.5	11.3	3.23	.63	.78	.93	37.0	10.8	3.59	.64	.79	.95	35.6	10.4	3.99	.65	.81	.97
71°F (22°C)	1055	500	40.0	11.7	2.93	.46	.58	.69	39.0	11.4	3.24	.46	.58	.70	37.4	11.0	3.60	.46	.59	.71	35.8	10.5	4.00	.47	.60	.73
	1195	565	41.0	12.0	2.95	.47	.60	.72	40.0	11.7	3.27	.47	.60	.73	38.5	11.3	3.62	.47	.61	.74	36.8	10.8	4.03	.48	.62	.76
	1325	625	42.0	12.3	2.97	.48	.61	.75	40.5	11.9	3.29	.48	.62	.76	39.0	11.4	3.64	.48	.63	.77	37.6	11.0	4.04	.49	.64	.79
HS29-036 - CH33-44/48B-2F with G60UHV-36B-090 COOLING CAPACITY - TXV Systems Only																										
63°F (17°C)	1030	485	36.2	10.6	2.84	.74	.87	.99	35.0	10.3	3.15	.75	.89	1.00	33.6	9.8	3.50	.76	.90	1.00	32.0	9.4	3.89	.78	.93	1.00
	1145	540	37.0	10.8	2.86	.76	.90	1.00	35.6	10.4	3.17	.78	.92	1.00	34.2	10.0	3.52	.79	.94	1.00	32.8	9.6	3.91	.80	.96	1.00
	1260	595	37.8	11.1	2.87	.78	.93	1.00	36.4	10.7	3.18	.79	.95	1.00	34.8	10.2	3.53	.81	.97	1.00	33.4	9.8	3.93	.83	.99	1.00
67°F (19°C)	1030	485	38.5	11.3	2.89	.59	.71	.84	37.0	10.8	3.20	.60	.73	.85	35.6	10.4	3.55	.60	.74	.87	34.2	10.0	3.95	.61	.75	.89
	1145	540	39.0	11.4	2.91	.60	.74	.87	37.8	11.1	3.22	.61	.75	.88	36.4	10.7	3.57	.62	.76	.90	34.8	10.2	3.97	.63	.78	.92
	1260	595	40.0	11.7	2.92	.62	.76	.90	38.5	11.3	3.23	.62	.77	.91	37.0	10.8	3.59	.63	.79	.94	35.4	10.4	3.99	.64	.80	.96
71°F (22°C)	1030	485	40.5	11.9	2.93	.46	.58	.69	39.0	11.4	3.25	.46	.58	.70	37.6	11.0	3.60	.46	.59	.71	36.0	10.6	4.01	.46	.60	.73
	1145	540	41.5	12.2	2.95	.46	.59	.71	40.0	11.7	3.27	.46	.60	.73	38.5	11.3	3.63	.47	.60	.74	36.8	10.8	4.03	.47	.61	.75
	1260	595	42.0	12.3	2.97	.47	.60	.74	40.5	11.9	3.29	.47	.61	.75	39.0	11.4	3.64	.47	.62	.76	37.6	11.0	4.05	.48	.63	.78
HS29-036 - CH33-44/48B-2F with G61MPV-36B COOLING CAPACITY - TXV Systems Only																										
63°F (17°C)	1055	500	36.4	10.7	2.85	.74	.88	1.00	35.0	10.3	3.15	.76	.89	1.00	33.6	9.8	3.50	.77	.91	1.00	32.2	9.4	3.90	.78	.93	1.00
	1195	565	37.4	11.0	2.87	.77	.92	1.00	36.0	10.6	3.17	.78	.93	1.00	34.6	10.1	3.53	.80	.96	1.00	33.0	9.7	3.92	.82	.98	1.00
	1325	625	38.0	11.1	2.89	.80	.95	1.00	36.8	10.8	3.19	.81	.97	1.00	35.4	10.4	3.54	.83	.99	1.00	33.8	9.9	3.94	.85	1.00	1.00
67°F (19°C)	1055	500	38.5	11.3	2.90	.59	.72	.84	37.2	10.9	3.20	.60	.73	.86	35.8	10.5	3.56	.61	.75	.88	34.2	10.0	3.96	.62	.76	.90
	1195	565	39.5	11.6	2.92	.61	.75	.88	38.0	11.1	3.23	.62	.76	.90	36.8	10.8	3.58	.63	.78	.92	35.2	10.3	3.98	.64	.79	.94
	1325	625	40.5	11.9	2.93	.63	.77	.92	39.0	11.4	3.24	.64	.79	.93	37.4	11.0	3.60	.65	.81	.96	35.8	10.5	4.00	.66	.82	.98
71°F (22°C)	1055	500	40.5	11.9	2.94	.46	.58	.70	39.0	11.4	3.25	.46	.58	.71	37.8	11.1	3.61	.46	.59	.72	36.2	10.6	4.01	.47	.60	.73
	1195	565	41.5	12.2	2.96	.47	.60	.73	40.5	11.9	3.28	.47	.60	.74	39.0	11.4	3.63	.47	.61	.75	37.2	10.9	4.04	.48	.62	.77
	1325	625	42.5	12.5	2.98	.48	.62	.75	41.0	12.0	3.30	.48	.62	.76	39.5	11.6	3.65	.48	.63	.78	38.0	11.1	4.06	.49	.65	.80
HS29-036 - CB29M-31 - CB28UH-030 COOLING CAPACITY - TXV Systems Only																										
63°F (17°C)	950	450	32.6	9.6	2.77	.72	.84	.95	31.6	9.3	3.08	.73	.86	.96	30.4	8.9	3.42	.74	.87	.98	29.2	8.6	3.82	.75	.89	.99
	1050	495	33.4	9.8	2.79	.74	.86	.97	32.4	9.5	3.09	.75	.88	.98	31.0	9.1	3.44	.76	.90	1.00	29.8	8.7	3.84	.77	.92	1.00
	1150	545	34.0	10.0	2.80	.75	.88	.99	32.8	9.6	3.10	.76	.90	1.00	31.6	9.3	3.45	.78	.92	1.00	30.4	8.9	3.85	.79	.94	1.00
67°F (19°C)	950	450	34.2	10.0	2.80	.58	.70	.81	33.2	9.7	3.11	.59	.71	.82	32.0	9.4	3.46	.60	.72	.84	30.8	9.0	3.86	.60	.73	.86
	1050	495	35.0	10.3	2.82	.59	.71	.83	34.0	10.0	3.13	.60	.72	.85	32.8	9.6	3.48	.61	.74	.86	31.4	9.2	3.88	.61	.75	.88
	1150	545	35.8	10.5	2.83	.60	.73	.85	34.6	10.1	3.14	.61	.74	.87	33.4	9.8	3.49	.62	.75	.89	32.0	9.4	3.90	.62	.77	.91
71°F (22°C)	950	450	35.6	10.4	2.83	.45	.57	.68	34.6	10.1	3.14	.45	.57	.68	33.4	9.8	3.50	.45	.58	.70	32.2	9.4	3.90	.46	.59	.71
	1050	495	36.4	10.7	2.85	.46	.58	.69	35.4	10.4	3.16	.46	.58	.70	34.2	10.0	3.52	.46	.59	.71	33.0	9.7	3.92	.47	.60	.73
	1150	545	37.2	10.9	2.86	.46	.59	.71	36.0	10.6	3.18	.46	.60	.72	34.8	10.2	3.53	.46	.60	.73	33.6	9.8	3.94	.47	.61	.75
HS29-036 - CB29M-41 - CB28UH-036 COOLING CAPACITY - TXV Systems Only																										
63°F (17°C)	1000	470	33.2	9.7	2.78	.74	.86	.97	32.2	9.4	3.09	.75	.88	.99	31.0	9.1	3.43	.76	.89	1.00	29.6	8.7	3.83	.77	.91	1.00
	1200	565	34.8	10.2	2.81	.77	.91	1.00	33.6	9.8	3.12	.78	.92	1.00	32.4	9.5	3.47	.79	.94	1.00	31.0	9.1	3.87	.81	.96	1.00
	1400	660	35.8	10.5	2.84	.80	.94	1.00	34.6	10.1	3.14	.81	.96	1.00	33.4	9.8	3.49	.83	.98	1.00	32.0	9.4	3.89	.85	.99	1.00
67°F (19°C)	1000	470	35.0	10.3	2.82	.59	.71	.83	34.0	10.0	3.13	.60	.72	.85	32.6	9.6	3.48	.60	.73	.86	31.4	9.2	3.88	.61	.75	.88
	1200	565	36.6	10.7	2.85	.61	.75	.88	35.2	10.3	3.16	.62	.76	.89	34.0	10.0	3.51	.62	.77	.91	32.4	9.5	3.91	.63	.79	.93
	1400	660	37.6	11.0	2.87	.63	.78	.92	36.2	10.6	3.18	.64	.79	.93	34.8	10.2	3.53	.65	.81	.95	33.4	9.8	3.93	.66	.83	.97
71°F (22°C)	1000	470	36.8	10.8	2.85	.46	.57	.69	35.6	10.4	3.16	.46	.58	.70	34.2	10.0	3.52	.46	.59	.71	33.0	9.7	3.92	.46	.60	.72
	1200	565	38.0	11.1	2.89	.46	.60	.72	37.0	10.8	3.20	.47	.60	.74	35.6	10.4	3.55	.47	.61	.75	34.2	10.0	3.96	.47	.62	.76
	1400	660	39.5	11.6	2.91	.47	.62	.76	38.0	11.1	3.22	.48	.63	.77	36.8	10.8	3.58	.48	.64	.79	35.2	10.3	3.98	.48	.65	.80
HS29-036 - CB29M-46 - CB28UH-042 COOLING CAPACITY - TXV Systems Only																										
63°F (17°C)	1000	470	34.6	10.1	2.81	.74	.87	.99	33.4	9.8	3.11	.75	.89	1.00	32.0	9.4	3.46	.76	.91	1.00	30.6	9.0	3.86	.78	.93	1.00
	1200	565	35.8	10.5	2.84	.78	.93	1.00	34.6	10.1	3.14	.79	.95	1.00	33.2	9.7	3.49	.81	.96	1.00	31.8	9.3	3.89	.82	.98	1.00
	1400	660	36.8	10.8	2.86	.82	.97	1.00	35.6	10.4	3.17	.83	.99	1.00	34.2	10.0	3.51	.85	1.00	1.00	32.8	9.6	3.91	.87	1.00	1.00
67°F (19°C)	1000	470	36.6	10.7	2.85	.59	.72	.84	35.4	10.4	3.16	.59	.72	.86	34.0	10.0	3.51	.60	.74	.87	32.4	9.5	3.91	.61	.75	.89
	1200	565	38.0	11.1	2.88	.61	.75	.89	36.6	10.7	3.19	.62	.77	.91	35.2	10.3	3.54	.62	.78	.93	33.6	9.8	3.94	.63	.80	.95
	1400	660	39.0	11.4	2.90	.63	.79	.95	37.6	11.0	3.21	.64	.81	.96	36.0	10.6	3.56	.65	.83	.98	34.4	10.1	3.96	.66	.84	1.00
71°F (22°C)	1000	470	38.5	11.3	2.89	.45	.57	.69	37.2	10.9	3.20	.45	.58	.70	35.8	10.5	3.56	.45	.58	.71	34.4	10.1	3.96	.45	.59	.73
	1200	565	40.0	11.7	2.92	.46	.60	.73	38.5	11.3	3.23	.46	.61	.74	37.0	10.8	3.59	.46	.61	.76	35.6	10.4	3.99	.47	.62	.78
	1400	660	41.0	12.0	2.95	.47	.62	.77	39.5	11.6	3.26	.47	.63	.79	38.0	11.1	3.61	.48	.64	.80	36.4	10.7	4.01	.48	.65	.82

NOTE - For Temperatures and Capacities not shown in tables, see bulletin - Cooling Unit Rating Table Correction Factor Data in Miscellaneous Engineering Data section.

Entering Wet Bulb Temperature	Total Air Volume		Outdoor Air Temperature Entering Outdoor Coil																							
			85°F (29°C)						95°F (35°C)						105°F (41°C)						115°F (46°C)					
			Total Cooling Capacity		Comp Motor kW Input	Sensible To Total Ratio (S/T) Dry Bulb			Total Cooling Capacity		Comp Motor kW Input	Sensible To Total Ratio (S/T) Dry Bulb			Total Cooling Capacity		Comp Motor kW Input	Sensible To Total Ratio (S/T) Dry Bulb			Total Cooling Capacity		Comp Motor kW Input	Sensible To Total Ratio (S/T) Dry Bulb		
	cfm	L/s	kBtuh	kW		75°F 24°C	80°F 27°C	85°F 29°C	kBtuh	kW		75°F 24°C	80°F 27°C	85°F 29°C	kBtuh	kW		75°F 24°C	80°F 27°C	85°F 29°C	kBtuh	kW		75°F 24°C	80°F 27°C	85°F 29°C
HS29-036 - CB30M-31 - CB30U-31 COOLING CAPACITY - TXV Systems Only																										
63°F (17°C)	1050	495	35.0	10.3	2.82	.75	.89	1.00	33.6	9.8	3.12	.76	.90	1.00	32.4	9.5	3.47	.77	.92	1.00	30.8	9.0	3.86	.79	.95	1.00
	1150	545	35.6	10.4	2.83	.77	.91	1.00	34.2	10.0	3.14	.78	.93	1.00	32.8	9.6	3.48	.79	.95	1.00	31.4	9.2	3.88	.81	.97	1.00
	1250	590	36.2	10.6	2.84	.79	.94	1.00	34.8	10.2	3.15	.80	.96	1.00	33.4	9.8	3.49	.82	.97	1.00	32.0	9.4	3.89	.83	.99	1.00
67°F (19°C)	1050	495	37.0	10.8	2.86	.59	.73	.85	35.8	10.5	3.17	.60	.74	.87	34.2	10.0	3.52	.60	.75	.89	32.8	9.6	3.91	.61	.76	.91
	1150	545	37.6	11.0	2.87	.61	.75	.88	36.2	10.6	3.18	.61	.76	.90	34.8	10.2	3.53	.62	.77	.92	33.4	9.8	3.94	.63	.79	.94
	1250	590	38.0	11.1	2.89	.62	.76	.91	36.8	10.8	3.20	.62	.78	.93	35.4	10.4	3.55	.63	.79	.95	33.8	9.9	3.95	.64	.81	.97
71°F (22°C)	1050	495	39.0	11.4	2.90	.45	.58	.70	37.6	11.0	3.21	.45	.58	.71	36.2	10.6	3.56	.45	.59	.72	34.6	10.1	3.96	.46	.60	.74
	1150	545	39.5	11.6	2.92	.46	.59	.72	38.0	11.1	3.23	.46	.60	.73	36.8	10.8	3.58	.46	.61	.75	35.2	10.3	3.99	.46	.62	.76
	1250	590	40.0	11.7	2.93	.46	.61	.74	39.0	11.4	3.24	.47	.61	.76	37.2	10.9	3.59	.47	.62	.77	35.8	10.5	4.00	.47	.63	.79
HS29-036 - CB30M-41 - CB30U-41/46 - CB30M-46 COOLING CAPACITY - TXV Systems Only																										
63°F (17°C)	1000	470	34.8	10.2	2.81	.74	.88	.99	33.6	9.8	3.12	.75	.89	1.00	32.2	9.4	3.46	.76	.91	1.00	30.8	9.0	3.86	.78	.93	1.00
	1200	565	36.0	10.6	2.84	.78	.93	1.00	34.6	10.1	3.14	.79	.95	1.00	33.2	9.7	3.49	.81	.97	1.00	31.8	9.3	3.89	.83	.99	1.00
	1400	660	37.0	10.8	2.86	.82	.98	1.00	35.6	10.4	3.17	.84	.99	1.00	34.2	10.0	3.52	.85	1.00	1.00	33.0	9.7	3.92	.87	1.00	1.00
67°F (19°C)	1000	470	36.8	10.8	2.86	.59	.72	.84	35.4	10.4	3.16	.59	.73	.86	34.0	10.0	3.51	.60	.74	.88	32.6	9.6	3.91	.61	.75	.90
	1200	565	38.0	11.1	2.88	.61	.76	.90	36.8	10.8	3.19	.62	.77	.92	35.2	10.3	3.54	.63	.79	.94	33.8	9.9	3.94	.64	.80	.96
	1400	660	39.0	11.4	2.91	.64	.80	.95	37.8	11.1	3.22	.65	.81	.97	36.2	10.6	3.57	.65	.83	.98	34.6	10.1	3.96	.67	.85	1.00
71°F (22°C)	1000	470	38.5	11.3	2.90	.45	.57	.69	37.2	10.9	3.21	.45	.58	.70	36.0	10.6	3.56	.45	.59	.72	34.4	10.1	3.96	.45	.59	.73
	1200	565	40.0	11.7	2.93	.46	.60	.74	38.5	11.3	3.24	.46	.61	.75	37.2	10.9	3.59	.46	.62	.76	35.6	10.4	3.99	.47	.63	.78
	1400	660	41.0	12.0	2.95	.47	.63	.78	39.5	11.6	3.26	.47	.64	.79	38.0	11.1	3.62	.48	.64	.81	36.6	10.7	4.02	.48	.66	.83
HS29-036 - CB31MV-41 COOLING CAPACITY - TXV Systems Only																										
63°F (17°C)	1075	505	35.2	10.3	2.82	.76	.90	1.00	34.0	10.0	3.13	.77	.92	1.00	32.6	9.6	3.47	.78	.94	1.00	31.2	9.1	3.87	.80	.95	1.00
	1275	600	36.4	10.7	2.85	.80	.95	1.00	35.0	10.3	3.15	.81	.97	1.00	33.6	9.8	3.50	.83	.99	1.00	32.2	9.4	3.90	.85	1.00	1.00
	1475	695	37.4	11.0	2.87	.83	.99	1.00	36.0	10.6	3.18	.85	1.00	1.00	34.6	10.1	3.53	.87	1.00	1.00	33.4	9.8	3.93	.89	1.00	1.00
67°F (19°C)	1075	505	37.4	11.0	2.87	.60	.73	.87	36.0	10.6	3.17	.60	.74	.88	34.6	10.1	3.53	.61	.76	.90	33.0	9.7	3.92	.62	.77	.92
	1275	600	38.5	11.3	2.90	.62	.77	.92	37.2	10.9	3.20	.63	.79	.94	35.6	10.4	3.55	.64	.80	.96	34.0	10.0	3.95	.65	.82	.98
	1475	695	39.5	11.6	2.91	.65	.81	.97	38.0	11.1	3.22	.65	.83	.98	36.4	10.7	3.57	.66	.85	1.00	34.8	10.2	3.97	.68	.87	1.00
71°F (22°C)	1075	505	39.0	11.4	2.91	.45	.58	.71	37.8	11.1	3.22	.45	.59	.72	36.4	10.7	3.57	.45	.60	.73	34.8	10.2	3.97	.46	.61	.75
	1275	600	40.5	11.9	2.94	.46	.61	.75	39.0	11.4	3.25	.47	.62	.77	37.6	11.0	3.60	.47	.63	.78	36.0	10.6	4.01	.47	.64	.80
	1475	695	41.5	12.2	2.96	.47	.64	.79	40.0	11.7	3.27	.48	.64	.81	38.5	11.3	3.63	.48	.65	.82	36.8	10.8	4.03	.48	.67	.85
HS29-036 - CVP10-41/EC10Q3 - CVP10-46/EC10Q4 COOLING CAPACITY - TXV Systems Only																										
63°F (17°C)	1000	470	34.8	10.2	2.81	.75	.88	.99	33.6	9.8	3.12	.76	.90	1.00	32.4	9.5	3.47	.77	.92	1.00	31.0	9.1	3.87	.79	.94	1.00
	1200	565	36.0	10.6	2.84	.79	.93	1.00	34.8	10.2	3.15	.80	.95	1.00	33.4	9.8	3.50	.82	.97	1.00	32.2	9.4	3.90	.84	.99	1.00
	1400	660	37.0	10.8	2.86	.83	.98	1.00	35.8	10.5	3.17	.85	.99	1.00	34.6	10.1	3.53	.87	1.00	1.00	33.4	9.8	3.93	.88	1.00	1.00
67°F (19°C)	1000	470	36.8	10.8	2.86	.60	.72	.85	35.6	10.4	3.17	.61	.74	.86	34.4	10.1	3.52	.62	.75	.88	33.0	9.7	3.92	.62	.77	.90
	1200	565	38.0	11.1	2.89	.63	.77	.90	37.0	10.8	3.20	.63	.78	.92	35.6	10.4	3.55	.64	.79	.94	34.0	10.0	3.95	.65	.81	.96
	1400	660	39.0	11.4	2.91	.65	.80	.95	37.8	11.1	3.22	.66	.82	.97	36.4	10.7	3.57	.67	.84	.99	34.8	10.2	3.97	.68	.86	1.00
71°F (22°C)	1000	470	39.0	11.4	2.90	.46	.59	.70	37.8	11.1	3.22	.47	.59	.71	36.4	10.7	3.57	.47	.60	.72	35.0	10.3	3.98	.47	.61	.74
	1200	565	40.5	11.9	2.93	.48	.61	.74	39.0	11.4	3.25	.48	.62	.75	37.6	11.0	3.60	.48	.63	.77	36.2	10.6	4.01	.49	.64	.79
	1400	660	41.5	12.2	2.96	.49	.64	.78	40.0	11.7	3.27	.49	.65	.80	38.5	11.3	3.63	.50	.66	.81	37.0	10.8	4.03	.50	.67	.84
HS29-036 - C33-36A/B/C COOLING CAPACITY - RFC Systems Only																										
63°F (17°C)	1000	470	34.4	10.1	2.81	.75	.88	.99	33.2	9.7	3.12	.76	.90	1.00	31.8	9.3	3.47	.78	.91	1.00	30.6	9.0	3.87	.79	.93	1.00
	1200	565	35.8	10.5	2.84	.79	.93	1.00	34.6	10.1	3.15	.80	.95	1.00	33.2	9.7	3.50	.82	.97	1.00	31.6	9.3	3.90	.83	.99	1.00
	1400	660	36.8	10.8	2.86	.82	.98	1.00	35.6	10.4	3.17	.84	.99	1.00	34.2	10.0	3.53	.86	1.00	1.00	33.0	9.7	3.93	.88	1.00	1.00
67°F (19°C)	1000	470	36.2	10.6	2.85	.61	.73	.85	35.0	10.3	3.16	.61	.74	.86	33.6	9.8	3.51	.62	.75	.88	32.2	9.4	3.91	.63	.77	.90
	1200	565	37.6	11.0	2.88	.63	.76	.90	36.4	10.7	3.19	.64	.78	.92	35.0	10.3	3.55	.65	.79	.94	33.6	9.8	3.95	.66	.81	.96
	1400	660	38.5	11.3	2.90	.65	.80	.95	37.4	11.0	3.21	.66	.82	.97	36.0	10.6	3.57	.67	.83	.98	34.4	10.1	3.97	.68	.85	1.00
71°F (22°C)	1000	470	37.8	11.1	2.88	.47	.59	.71	36.4	10.7	3.19	.47	.60	.72	35.2	10.3	3.55	.48	.61	.73	33.8	9.9	3.96	.48	.61	.74
	1200	565	39.5	11.6	2.91	.48	.62	.74	38.0	11.1	3.23	.49	.62	.75	36.6	10.7	3.59	.49	.63	.77	35.2	10.3	3.99	.49	.64	.79
	1400	660	40.5	11.9	2.94	.49	.64	.78	39.0	11.4	3.26	.50	.65	.79	37.6	11.0	3.62	.50	.66	.81	36.2	10.6	4.02	.51	.67	.83
HS29-036 - C33-42B COOLING CAPACITY - RFC Systems Only																										
63°F (17°C)	1000	470	34.4	10.1	2.81	.75	.88	.99	33.2	9.7	3.12	.76	.90	1.00	31.8	9.3	3.47	.78	.91	1.00	30.6	9.0	3.87	.79	.93	1.00
	1200	565	35.8	10.5	2.84	.79	.93	1.00	34.6	10.1	3.15	.80	.95	1.00	33.2	9.7	3.50	.82	.97	1.00	31.6	9.3	3.90	.83	.99	1.00
	1400	660	36.8	10.8	2.86	.82	.98	1.00	35.6	10.4	3.17	.84	.99	1.00	34.2	10.0	3.53	.86	1.00	1.00	33.0	9.7	3.93	.88	1.00	1.00
67°F (19°C)	1000	470	36.2	10.6	2.85	.61	.73	.85	35.0	10.3	3.16	.61	.74	.86	33.6	9.8	3.51	.62	.75	.88	32.2	9.4	3.91	.63	.77	.90
	1200	565	37.6	11.0	2.88	.63	.76	.90	36.4	10.7	3.19	.64	.78	.92	35.0	10.3	3.55	.65	.79	.94	33.6	9.8	3.95	.66	.81	.96
	1400	660	38.5	11.3	2.90	.65	.80	.95	37.4	11.0	3.21	.66	.82	.97	36.0	10.6	3.57	.67	.83	.98	34.4	10.1	3.97	.68	.85	1.00
71°F (22°C)	1000	470	37.8	11.1	2.88	.47	.59	.71	36.4	10.7	3.19	.47	.60	.72	35.2	10.3	3.55	.48	.61	.73	33.8	9.9	3.96	.48	.61	.74
	1200	565	39.5	11.6	2.91	.48	.62	.74	38.0	11.1	3.23	.49	.62	.75	36.6	10.7	3.59	.49	.63	.77	35.2	10.3	3.99	.49	.64	.79
	1400	660	40.5	11.9	2.94	.49	.64	.78	39.0	11.4	3.26	.50	.65	.79	37.6	11.0	3.62	.50	.66	.81	36.2	10.6	4.02	.51	.67	.83
HS29-036 - C33-38A/B COOLING CAPACITY - RFC Systems Only																										
63°F (17°C)	1000	470	36.0	10.6	2.84	.75	.87	.99	34.6	10.1	3.15	.76	.89	1.00	33.4	9.8	3.50	.77	.91	1.00	31.8	9.3	3.90	.78	.93	1.00
	1200	565	37.4	11.0	2.87	.78	.93	1.00	36.0	10.6	3.18	.79	.94	1.00	34.6	10.1	3.54	.81	.96	1.00	33.2	9.7	3.94	.83	.99	1.00
	1400	660	38.5	11.3	2.90	.82	.97	1.00	37.2	10.9	3.21	.84	.99	1.00	35.8	10.5	3.56	.85	1.00	1.00	34.4	10.1	3.97	.87	1.00	1.00
67°F (19°C)	1000	470	38.0	11.1	2.89	.60	.72	.84	36.8	10.8	3.20	.60	.73	.85	35.4	10.4	3.56	.61	.74	.87	34.0	10.0	3.96	.62	.76	.89
	1200	565	39.5	11.6	2.92	.62	.76	.89	38.0	11.1	3.23	.63	.77	.91	36.8	10.8	3.59	.64	.79	.93	35.2	10.3	4.00	.65	.80	.95
	1400	660	40.5	11.9	2.94	.65	.79	.94	39.0	11.4	3.25	.65	.81	.96	37.8	11.1	3.61	.67	.83	.98	36.2	10.6	4.02	.68	.85	1.00
71°F (22°C)	1000	470	40.0	11.7	2.93	.47	.58	.69	38.5	11.3	3.24	.47	.59	.71	37.4	11.0	3.60	.47	.60	.72	35.8	10.5	4.02	.47	.60	.73
	1200	565	41.5	12.2	2.96	.48	.61	.74	40.0	11.7	3.28	.48	.61	.75	38.5	11.3	3.64	.48	.62	.76	37.2	10.9	4.05	.49	.64	.78
	1400	660	43.0	12.6	2.99	.49	.63	.77	41.5	12.2	3.31	.49	.64	.79	40.0	11.7	3.67	.50	.65	.81	38.0	11.1	4.08	.50	.67	.83

NOTE - For Temperatures and Capacities not shown in tables, see bulletin - Cooling Unit Rating Table Correction Factor Data in Miscellaneous Engineering Data section.

Entering Wet Bulb Temperature	Total Air Volume		Outdoor Air Temperature Entering Outdoor Coil																							
			85°F (29°C)						95°F (35°C)						105°F (41°C)						115°F (46°C)					
			Total Cooling Capacity		Comp Motor kW Input	Sensible To Total Ratio (S/T) Dry Bulb			Total Cooling Capacity		Comp Motor kW Input	Sensible To Total Ratio (S/T) Dry Bulb			Total Cooling Capacity		Comp Motor kW Input	Sensible To Total Ratio (S/T) Dry Bulb			Total Cooling Capacity		Comp Motor kW Input	Sensible To Total Ratio (S/T) Dry Bulb		
	cfm	L/s	kBtuh	kW		75°F 24°C	80°F 27°C	85°F 29°C	kBtuh	kW		75°F 24°C	80°F 27°C	85°F 29°C	kBtuh	kW		75°F 24°C	80°F 27°C	85°F 29°C	kBtuh	kW		75°F 24°C	80°F 27°C	85°F 29°C
HS29-036 - CR26-36N-F ONLY COOLING CAPACITY - RFC Systems Only																										
63°F (17°C)	1000	470	34.8	10.2	2.82	.75	.88	.99	33.4	9.8	3.12	.76	.90	1.00	32.2	9.4	3.47	.77	.91	1.00	30.8	9.0	3.88	.79	.93	1.00
	1200	565	36.0	10.6	2.84	.79	.93	1.00	34.8	10.2	3.15	.80	.95	1.00	33.4	9.8	3.50	.82	.97	1.00	32.0	9.4	3.91	.84	.99	1.00
	1400	660	37.2	10.9	2.87	.83	.97	1.00	35.8	10.5	3.17	.84	.99	1.00	34.4	10.1	3.53	.86	1.00	1.00	33.0	9.7	3.93	.88	1.00	1.00
67°F (19°C)	1000	470	36.6	10.7	2.86	.60	.73	.85	35.4	10.4	3.17	.61	.74	.86	34.0	10.0	3.52	.61	.75	.88	32.6	9.6	3.92	.62	.76	.90
	1200	565	38.0	11.1	2.88	.63	.77	.90	36.6	10.7	3.20	.63	.78	.92	35.2	10.3	3.55	.64	.80	.94	33.8	9.9	3.95	.65	.81	.96
	1400	660	39.0	11.4	2.91	.65	.81	.95	37.6	11.0	3.22	.66	.82	.96	36.0	10.6	3.57	.67	.84	.98	34.6	10.1	3.98	.68	.86	.99
71°F (22°C)	1000	470	38.5	11.3	2.90	.47	.58	.70	37.2	10.9	3.21	.47	.59	.71	35.8	10.5	3.57	.47	.60	.72	34.4	10.1	3.98	.47	.61	.74
	1200	565	40.0	11.7	2.93	.48	.61	.74	38.5	11.3	3.24	.48	.62	.75	37.2	10.9	3.60	.48	.63	.77	35.6	10.4	4.01	.49	.64	.79
	1400	660	41.0	12.0	2.95	.49	.64	.78	39.5	11.6	3.27	.49	.65	.80	38.0	11.1	3.63	.50	.66	.81	36.4	10.7	4.03	.50	.67	.84
HS29-036 - CR26-36W-F ONLY COOLING CAPACITY - RFC Systems Only																										
63°F (17°C)	1000	470	34.8	10.2	2.82	.75	.88	.99	33.4	9.8	3.12	.76	.90	1.00	32.2	9.4	3.47	.77	.91	1.00	30.8	9.0	3.88	.79	.93	1.00
	1200	565	36.0	10.6	2.84	.79	.93	1.00	34.8	10.2	3.15	.80	.95	1.00	33.4	9.8	3.50	.82	.97	1.00	32.0	9.4	3.91	.84	.99	1.00
	1400	660	37.2	10.9	2.87	.83	.97	1.00	35.8	10.5	3.17	.84	.99	1.00	34.4	10.1	3.53	.86	1.00	1.00	33.0	9.7	3.93	.88	1.00	1.00
67°F (19°C)	1000	470	36.6	10.7	2.86	.60	.73	.85	35.4	10.4	3.17	.61	.74	.86	34.0	10.0	3.52	.61	.75	.88	32.6	9.6	3.92	.62	.76	.90
	1200	565	38.0	11.1	2.88	.63	.77	.90	36.6	10.7	3.20	.63	.78	.92	35.2	10.3	3.55	.64	.80	.94	33.8	9.9	3.95	.65	.81	.96
	1400	660	39.0	11.4	2.91	.65	.81	.95	37.6	11.0	3.22	.66	.82	.96	36.0	10.6	3.57	.67	.84	.98	34.6	10.1	3.98	.68	.86	.99
71°F (22°C)	1000	470	38.5	11.3	2.90	.47	.58	.70	37.2	10.9	3.21	.47	.59	.71	35.8	10.5	3.57	.47	.60	.72	34.4	10.1	3.98	.47	.61	.74
	1200	565	40.0	11.7	2.93	.48	.61	.74	38.5	11.3	3.24	.48	.62	.75	37.2	10.9	3.60	.48	.63	.77	35.6	10.4	4.01	.49	.64	.79
	1400	660	41.0	12.0	2.95	.49	.64	.78	39.5	11.6	3.27	.49	.65	.80	38.0	11.1	3.63	.50	.66	.81	36.4	10.7	4.03	.50	.67	.84
HS29-036 - CH33-36A/B/C-2F COOLING CAPACITY - RFC Systems Only																										
63°F (17°C)	950	450	33.8	9.9	2.80	.73	.85	.97	32.6	9.6	3.11	.74	.86	.99	31.4	9.2	3.46	.75	.88	1.00	30.0	8.8	3.86	.76	.90	1.00
	1050	495	34.6	10.1	2.82	.75	.87	1.00	33.4	9.8	3.12	.76	.89	1.00	32.0	9.4	3.47	.77	.91	1.00	30.6	9.0	3.87	.78	.93	1.00
	1150	545	35.2	10.3	2.83	.76	.90	1.00	33.8	9.9	3.13	.77	.92	1.00	32.6	9.6	3.49	.79	.94	1.00	31.2	9.1	3.89	.80	.96	1.00
67°F (19°C)	950	450	35.8	10.5	2.84	.59	.70	.82	34.6	10.1	3.15	.59	.71	.83	33.2	9.7	3.50	.60	.72	.85	31.8	9.3	3.91	.61	.74	.86
	1050	495	36.6	10.7	2.85	.60	.72	.84	35.2	10.3	3.16	.61	.73	.86	34.0	10.0	3.52	.61	.74	.88	32.6	9.6	3.92	.62	.76	.89
	1150	545	37.2	10.9	2.87	.61	.74	.87	35.8	10.5	3.18	.62	.75	.88	34.6	10.1	3.53	.62	.76	.90	33.2	9.7	3.94	.63	.78	.92
71°F (22°C)	950	450	37.6	11.0	2.88	.46	.57	.68	36.4	10.7	3.19	.46	.58	.69	35.0	10.3	3.55	.47	.58	.70	33.8	9.9	3.96	.47	.59	.71
	1050	495	38.5	11.3	2.90	.47	.59	.70	37.2	10.9	3.21	.47	.59	.71	35.8	10.5	3.57	.47	.60	.72	34.4	10.1	3.98	.47	.61	.73
	1150	545	39.0	11.4	2.91	.47	.60	.72	37.8	11.1	3.22	.48	.60	.73	36.4	10.7	3.58	.48	.61	.74	35.0	10.3	3.99	.48	.62	.75
HS29-036 - CH23-41 COOLING CAPACITY - RFC Systems Only																										
63°F (17°C)	950	450	33.8	9.9	2.80	.73	.85	.96	32.6	9.6	3.10	.74	.86	.98	31.4	9.2	3.46	.75	.88	.99	30.2	8.9	3.86	.77	.90	1.00
	1050	495	34.6	10.1	2.81	.75	.87	.98	33.4	9.8	3.12	.76	.89	1.00	32.2	9.4	3.47	.77	.91	1.00	30.8	9.0	3.88	.79	.93	1.00
	1150	545	35.2	10.3	2.83	.76	.90	1.00	34.0	10.0	3.13	.78	.92	1.00	32.8	9.6	3.49	.79	.94	1.00	31.4	9.2	3.89	.81	.96	1.00
67°F (19°C)	950	450	36.0	10.6	2.84	.59	.71	.82	34.8	10.2	3.15	.60	.72	.83	33.4	9.8	3.51	.60	.73	.85	32.2	9.4	3.91	.61	.74	.87
	1050	495	36.8	10.8	2.86	.60	.72	.84	35.6	10.4	3.17	.61	.74	.86	34.2	10.0	3.53	.62	.75	.88	33.0	9.7	3.94	.63	.76	.90
	1150	545	37.6	11.0	2.87	.61	.74	.87	36.2	10.6	3.19	.62	.75	.88	35.0	10.3	3.55	.63	.77	.90	33.4	9.8	3.95	.64	.78	.93
71°F (22°C)	950	450	38.0	11.1	2.89	.47	.57	.68	36.8	10.8	3.20	.47	.58	.69	35.6	10.4	3.56	.47	.59	.70	34.2	10.0	3.97	.47	.60	.72
	1050	495	39.0	11.4	2.91	.47	.58	.70	37.8	11.1	3.22	.47	.59	.71	36.4	10.7	3.58	.47	.60	.72	35.0	10.3	3.99	.48	.61	.74
	1150	545	39.5	11.6	2.92	.47	.60	.72	38.5	11.3	3.24	.47	.61	.73	37.0	10.8	3.60	.48	.62	.74	35.6	10.4	4.01	.48	.63	.76

NOTE - For Temperatures and Capacities not shown in tables, see bulletin - Cooling Unit Rating Table Correction Factor Data in Miscellaneous Engineering Data section.

Entering Wet Bulb Temperature	Total Air Volume		Outdoor Air Temperature Entering Outdoor Coil																							
			85°F (29°C)						95°F (35°C)						105°F (41°C)						115°F (46°C)					
			Total Cooling Capacity		Comp Motor kW Input	Sensible To Total Ratio (S/T) Dry Bulb			Total Cooling Capacity		Comp Motor kW Input	Sensible To Total Ratio (S/T) Dry Bulb			Total Cooling Capacity		Comp Motor kW Input	Sensible To Total Ratio (S/T) Dry Bulb			Total Cooling Capacity		Comp Motor kW Input	Sensible To Total Ratio (S/T) Dry Bulb		
	cfm	L/s	kBtuh	kW		75°F 24°C	80°F 27°C	85°F 29°C	kBtuh	kW		75°F 24°C	80°F 27°C	85°F 29°C	kBtuh	kW		75°F 24°C	80°F 27°C	85°F 29°C	kBtuh	kW		75°F 24°C	80°F 27°C	85°F 29°C
HS29-036 - C33-36A/B/C COOLING CAPACITY - TXV or RFC Systems																										
63°F (17°C)	950	450	34.1	10.0	2.70	.71	.85	.96	32.4	9.5	2.89	.73	.87	.98	30.7	9.0	3.06	.74	.89	.99	28.9	8.5	3.22	.77	.91	1.00
	1100	520	35.0	10.3	2.72	.74	.88	.99	33.3	9.8	2.92	.76	.91	1.00	31.5	9.2	3.10	.78	.93	1.00	29.6	8.7	3.26	.80	.95	1.00
	1250	590	35.7	10.5	2.75	.77	.92	1.00	34.0	10.0	2.95	.79	.94	1.00	32.2	9.4	3.13	.81	.96	1.00	30.3	8.9	3.30	.84	.98	1.00
67°F (19°C)	950	450	36.4	10.7	2.77	.56	.69	.81	34.6	10.1	2.98	.57	.70	.83	32.8	9.6	3.16	.58	.72	.85	30.8	9.0	3.33	.59	.74	.88
	1100	520	37.2	10.9	2.80	.58	.72	.85	35.4	10.4	3.00	.59	.73	.87	33.4	9.8	3.19	.60	.75	.90	31.4	9.2	3.36	.61	.78	.92
	1250	590	37.9	11.1	2.82	.59	.75	.89	36.0	10.6	3.03	.60	.77	.91	33.9	9.9	3.22	.62	.79	.94	31.9	9.3	3.39	.63	.81	.96
71°F (22°C)	950	450	39.0	11.4	2.86	.42	.54	.66	37.1	10.9	3.07	.43	.55	.67	35.1	10.3	3.27	.43	.56	.69	33.0	9.7	3.45	.43	.57	.71
	1100	520	39.8	11.7	2.88	.43	.56	.69	37.8	11.1	3.10	.43	.57	.71	35.8	10.5	3.30	.44	.58	.73	33.6	9.8	3.48	.44	.60	.75
	1250	590	40.4	11.8	2.90	.43	.58	.72	38.4	11.3	3.12	.44	.59	.74	36.3	10.6	3.33	.44	.60	.76	34.1	10.0	3.51	.45	.62	.79
HS29-036 - C33-42B COOLING CAPACITY - TXV or RFC Systems																										
63°F (17°C)	1000	470	35.3	10.3	2.76	.72	.86	.97	33.5	9.8	2.96	.74	.88	.99	31.6	9.3	3.15	.76	.91	1.00	29.7	8.7	3.31	.78	.93	1.00
	1200	565	36.4	10.7	2.80	.76	.91	1.00	34.6	10.1	3.01	.78	.93	1.00	32.7	9.6	3.20	.80	.96	1.00	30.8	9.0	3.37	.83	.98	1.00
	1400	660	37.4	11.0	2.83	.80	.95	1.00	35.5	10.4	3.04	.82	.97	1.00	33.6	9.8	3.24	.85	.99	1.00	31.8	9.3	3.43	.88	1.00	1.00
67°F (19°C)	1000	470	37.7	11.0	2.84	.57	.70	.83	35.7	10.5	3.06	.58	.71	.85	33.7	9.9	3.25	.59	.73	.87	31.6	9.3	3.42	.60	.75	.90
	1200	565	38.6	11.3	2.88	.59	.74	.88	36.7	10.8	3.09	.60	.76	.90	34.6	10.1	3.29	.61	.78	.93	32.4	9.5	3.46	.63	.81	.96
	1400	660	39.4	11.5	2.90	.61	.78	.93	37.3	10.9	3.12	.63	.80	.95	35.2	10.3	3.32	.64	.83	.97	33.0	9.7	3.50	.66	.85	.99
71°F (22°C)	1000	470	40.3	11.8	2.93	.43	.55	.67	38.3	11.2	3.16	.43	.56	.69	36.2	10.6	3.36	.43	.57	.71	33.9	9.9	3.55	.44	.58	.73
	1200	565	41.3	12.1	2.97	.43	.57	.71	39.2	11.5	3.19	.44	.59	.73	37.0	10.8	3.40	.44	.60	.76	34.7	10.2	3.59	.45	.62	.78
	1400	660	42.0	12.3	2.99	.44	.60	.76	39.8	11.7	3.22	.45	.61	.78	37.6	11.0	3.43	.45	.63	.80	35.2	10.3	3.62	.46	.65	.83
HS29-036 - C33-38A/B COOLING CAPACITY - TXV Systems Only																										
63°F (17°C)	950	450	36.0	10.6	2.81	.71	.84	.96	34.1	10.0	3.01	.73	.86	.98	32.2	9.4	3.20	.74	.89	1.00	30.2	8.9	3.37	.77	.92	1.00
	1150	545	37.3	10.9	2.85	.75	.90	1.00	35.3	10.3	3.06	.77	.92	1.00	33.3	9.8	3.26	.79	.95	1.00	31.3	9.2	3.43	.82	.97	1.00
	1350	635	38.3	11.2	2.89	.79	.95	1.00	36.4	10.7	3.11	.81	.97	1.00	34.4	10.1	3.31	.84	.99	1.00	32.4	9.5	3.50	.87	1.00	1.00
67°F (19°C)	950	450	38.5	11.3	2.90	.56	.69	.81	36.5	10.7	3.11	.57	.70	.83	34.4	10.1	3.31	.58	.72	.85	32.3	9.5	3.49	.59	.74	.88
	1150	545	39.7	11.6	2.94	.58	.73	.86	37.6	11.0	3.16	.59	.74	.89	35.4	10.4	3.36	.61	.77	.91	33.1	9.7	3.54	.62	.79	.94
	1350	635	40.6	11.9	2.97	.61	.77	.91	38.4	11.3	3.19	.62	.79	.94	36.1	10.6	3.40	.63	.81	.97	33.8	9.9	3.58	.65	.84	.99
71°F (22°C)	950	450	41.3	12.1	2.99	.42	.54	.66	39.2	11.5	3.22	.43	.55	.67	37.0	10.8	3.43	.43	.56	.69	34.6	10.1	3.62	.43	.57	.71
	1150	545	42.5	12.5	3.03	.43	.57	.70	40.2	11.8	3.26	.43	.58	.72	37.9	11.1	3.48	.44	.59	.74	35.5	10.4	3.67	.44	.61	.77
	1350	635	43.3	12.7	3.06	.44	.59	.74	41.0	12.0	3.30	.44	.61	.77	38.6	11.3	3.51	.45	.62	.79	36.1	10.6	3.70	.46	.64	.82
HS29-036 - C33-44C COOLING CAPACITY - TXV Systems Only																										
63°F (17°C)	1000	470	36.6	10.7	2.83	.72	.86	.97	34.7	10.2	3.04	.74	.88	.99	32.7	9.6	3.23	.76	.90	1.00	30.7	9.0	3.40	.78	.93	1.00
	1200	565	37.9	11.1	2.88	.76	.91	1.00	35.9	10.5	3.09	.78	.94	1.00	33.9	9.9	3.29	.81	.96	1.00	31.8	9.3	3.46	.83	.99	1.00
	1400	660	38.9	11.4	2.91	.80	.96	1.00	36.9	10.8	3.13	.83	.98	1.00	34.9	10.2	3.34	.85	1.00	1.00	33.0	9.7	3.53	.88	1.00	1.00
67°F (19°C)	1000	470	39.1	11.5	2.92	.57	.70	.82	37.1	10.9	3.14	.57	.71	.84	35.0	10.3	3.34	.59	.73	.87	32.7	9.6	3.52	.60	.75	.90
	1200	565	40.3	11.8	2.96	.59	.74	.88	38.1	11.2	3.18	.60	.76	.90	35.9	10.5	3.39	.61	.78	.93	33.6	9.8	3.57	.63	.81	.96
	1400	660	41.1	12.0	2.99	.61	.78	.93	38.9	11.4	3.21	.63	.80	.95	36.6	10.7	3.42	.64	.83	.98	34.2	10.0	3.60	.66	.86	1.00
71°F (22°C)	1000	470	41.9	12.3	3.02	.43	.55	.67	39.7	11.6	3.25	.43	.56	.69	37.5	11.0	3.46	.43	.57	.70	35.1	10.3	3.65	.44	.58	.73
	1200	565	43.0	12.6	3.05	.43	.57	.71	40.7	11.9	3.29	.44	.59	.73	38.4	11.3	3.51	.44	.60	.76	35.9	10.5	3.70	.45	.62	.78
	1400	660	43.8	12.8	3.08	.44	.60	.76	41.5	12.2	3.32	.45	.61	.78	39.0	11.4	3.54	.45	.63	.80	36.5	10.7	3.73	.46	.65	.84
HS29-036 - C33-48B/C COOLING CAPACITY - TXV Systems Only																										
63°F (17°C)	1000	470	37.0	10.8	2.80	.72	.85	.97	35.1	10.3	3.00	.73	.87	.99	33.2	9.7	3.19	.75	.90	1.00	31.1	9.1	3.35	.77	.93	1.00
	1200	565	38.3	11.2	2.84	.76	.90	1.00	36.3	10.6	3.05	.78	.93	1.00	34.2	10.0	3.24	.80	.95	1.00	32.2	9.4	3.41	.82	.98	1.00
	1400	660	39.3	11.5	2.87	.80	.95	1.00	37.3	10.9	3.09	.82	.97	1.00	35.3	10.3	3.29	.84	.99	1.00	33.3	9.8	3.48	.87	1.00	1.00
67°F (19°C)	1000	470	39.6	11.6	2.88	.56	.69	.82	37.6	11.0	3.10	.57	.71	.84	35.5	10.4	3.30	.58	.72	.86	33.2	9.7	3.47	.59	.75	.89
	1200	565	40.8	12.0	2.92	.59	.73	.87	38.6	11.3	3.14	.60	.75	.89	36.3	10.6	3.34	.61	.77	.92	34.0	10.0	3.52	.62	.80	.95
	1400	660	41.6	12.2	2.95	.61	.77	.92	39.3	11.5	3.17	.62	.79	.94	37.0	10.8	3.37	.64	.82	.97	34.7	10.2	3.55	.65	.85	.99
71°F (22°C)	1000	470	42.5	12.5	2.98	.42	.54	.66	40.3	11.8	3.21	.43	.55	.68	38.0	11.1	3.42	.43	.56	.70	35.6	10.4	3.61	.43	.58	.72
	1200	565	43.6	12.8	3.01	.43	.57	.71	41.3	12.1	3.25	.44	.58	.72	38.9	11.4	3.46	.44	.59	.75	36.5	10.7	3.65	.45	.61	.77
	1400	660	44.4	13.0	3.04	.44	.59	.75	42.0	12.3	3.28	.45	.61	.77	39.6	11.6	3.49	.45	.62	.79	37.0	10.8	3.68	.46	.64	.82
HS29-036 - CR26-36N/W-F COOLING CAPACITY - TXV or RFC Systems																										
63°F (17°C)	900	425	35.4	10.4	2.80	.70	.83	.94	33.6	9.8	3.00	.72	.85	.97	31.7	9.3	3.18	.73	.87	.99	29.7	8.7	3.35	.75	.90	1.00
	1100	520	36.8	10.8	2.84	.74	.88	.99	34.8	10.2	3.05	.76	.91	1.00	32.9	9.6	3.25	.78	.93	1.00	30.8	9.0	3.42	.81	.96	1.00
	1300	615	37.8	11.1	2.88	.78	.93	1.00	35.9	10.5	3.10	.80	.96	1.00	33.9	9.9	3.30	.83	.98	1.00	31.9	9.3	3.48	.85	1.00	1.00
67°F (19°C)	900	425	37.9	11.1	2.88	.56	.68	.79	36.0	10.6	3.10	.56	.69	.81	33.9	9.9	3.30	.57	.70	.84	31.8	9.3	3.47	.58	.73	.86
	1100	520	39.2	11.5	2.93	.58	.72	.85	37.1	10.9	3.15	.59	.73	.87	35.0	10.3	3.35	.60	.75	.90	32.7	9.6	3.53	.61	.78	.93
	1300	615	40.1	11.8	2.96	.60	.76	.90	38.0	11.1	3.18	.61	.78	.93	35.7	10.5	3.39	.63	.80	.95	33.4	9.8	3.57	.64	.83	.98
71°F (22°C)	900	425	40.6	11.9	2.98	.42	.54	.65	38.6	11.3	3.21	.42	.54	.66	36.4	10.7	3.42	.43	.55	.68	34.2	10.0	3.61	.43	.56	.70
	1100	520	41.9	12.3	3.02	.43	.56	.69	39.7	11.6	3.26	.43	.57	.71	37.5	11.0	3.47	.44	.58	.73	35.1	10.3	3.66	.44	.60	.75
	1300	615	42.9	12.6	3.05	.44	.59	.73	40.6	11.9	3.29	.44	.60	.75	38.2	11.2	3.51	.45	.61	.78	35.7	10.5	3.70	.45	.63	.81
HS29-036 - CH33-36A/B/C-2F - CH23-41 COOLING CAPACITY - TXV or RFC Systems																										
63°F (17°C)	1000	470	35.7	10.5	2.81	.73	.86	.98	33.9	9.9	3.01	.74	.88	.99	32.0	9.4	3.20	.76	.91	1.00	30.0	8.8	3.37	.78	.94	1.00
	1200	565	36.9	10.8	2.85	.77	.92	1.00	35.0	10.3	3.06	.79	.94	1.00	33.1	9.7	3.26	.81	.96	1.00	31.1	9.1	3.43	.84	.99	1.00
	1400	660	37.9	11.1	2.89	.81	.96	1.00	36.0	10.6	3.11	.83	.98	1.00	34.1	10.0	3.31	.86	1.00	1.00	32.2	9.4	3.50	.89	1.00	1.00
67°F (19°C)	1000	470	38.1	11.2	2.89	.57	.70	.83	36.1	10.6	3.11	.58	.72	.85	34.0	10.0	3.31	.59	.74	.88	31.9	9.3	3.48	.60	.76	.90
	1200	565	39.1	11.5	2.93	.59	.74	.89	37.1	10.9	3.15	.60	.76	.91	34.9	10.2	3.35	.62	.79	.94	32.7	9.6	3.53	.63	.81	.96
	1400	660	40.0	11.7	2.96	.62	.79	.94	37.8	11.1	3.18	.63	.81	.96	35.6	10.4	3.38	.65	.83	.98	33.3	9.8	3.57	.67	.86	1.00
71°F (22°C)	1000	470	40.8	12.0	2.98	.43	.55	.67	38.7	11.3	3.21	.43	.56	.69	36.5	10.7	3.43	.43	.57	.71	34.2	10.0	3.61	.44	.59	.73
	1200	565	41.8	12.3	3.02	.43	.58	.72	39.6	11.6	3.25	.44	.59	.74	37.3	10.9	3.47	.44	.60	.76	34.9	10.2	3.66	.45	.62	.79
	1400	660	42.6	12.5	3.05	.44	.60	.76	40.3	11.8	3.28	.45	.62	.79	37.9	11.1	3.50	.46	.64	.81	35.5	10.4	3.69	.46	.66	.84

NOTE - For Temperatures and Capacities not shown in tables, see bulletin - Cooling Unit Rating Table Correction Factor Data in Miscellaneous Engineering Data section.

Entering Wet Bulb Temperature	Total Air Volume		Outdoor Air Temperature Entering Outdoor Coil																							
			85°F (29°C)						95°F (35°C)						105°F (41°C)						115°F (46°C)					
			Total Cooling Capacity		Comp Motor kW Input	Sensible To Total Ratio (S/T) Dry Bulb			Total Cooling Capacity		Comp Motor kW Input	Sensible To Total Ratio (S/T) Dry Bulb			Total Cooling Capacity		Comp Motor kW Input	Sensible To Total Ratio (S/T) Dry Bulb			Total Cooling Capacity		Comp Motor kW Input	Sensible To Total Ratio (S/T) Dry Bulb		
	cfm	L/s	kBtuh	kW		75°F 24°C	80°F 27°C	85°F 29°C	kBtuh	kW		75°F 24°C	80°F 27°C	85°F 29°C	kBtuh	kW		75°F 24°C	80°F 27°C	85°F 29°C	kBtuh	kW		75°F 24°C	80°F 27°C	85°F 29°C
HS29-036 - CB29M-31 - CB28UH-030 COOLING CAPACITY - TXV Systems Only																										
63°F (17°C)	950	450	33.8	9.9	2.67	.72	.85	.96	32.1	9.4	2.85	.73	.87	.98	30.4	8.9	3.03	.75	.90	1.00	28.7	8.4	3.18	.77	.92	1.00
	1050	495	34.4	10.1	2.69	.74	.88	.99	32.7	9.6	2.88	.76	.90	1.00	31.0	9.1	3.05	.77	.92	1.00	29.2	8.6	3.21	.80	.95	1.00
	1150	545	34.9	10.2	2.70	.76	.91	1.00	33.2	9.7	2.90	.78	.93	1.00	31.4	9.2	3.08	.80	.95	1.00	29.6	8.7	3.24	.82	.97	1.00
67°F (19°C)	950	450	36.0	10.6	2.74	.56	.69	.82	34.3	10.1	2.94	.57	.71	.84	32.4	9.5	3.12	.58	.73	.86	30.5	8.9	3.29	.59	.75	.89
	1050	495	36.6	10.7	2.76	.58	.71	.85	34.8	10.2	2.96	.58	.73	.87	32.9	9.6	3.15	.60	.75	.89	30.9	9.1	3.31	.61	.77	.92
	1150	545	37.0	10.8	2.77	.59	.73	.87	35.2	10.3	2.98	.60	.75	.90	33.3	9.8	3.16	.61	.77	.92	31.2	9.1	3.33	.62	.80	.95
71°F (22°C)	950	450	38.5	11.3	2.82	.42	.55	.67	36.7	10.8	3.04	.43	.55	.68	34.7	10.2	3.23	.43	.57	.70	32.7	9.6	3.41	.43	.58	.72
	1050	495	39.0	11.4	2.84	.43	.56	.69	37.1	10.9	3.05	.43	.57	.70	35.2	10.3	3.25	.44	.58	.72	33.1	9.7	3.43	.44	.59	.75
	1150	545	39.5	11.6	2.85	.43	.57	.71	37.6	11.0	3.07	.44	.58	.73	35.5	10.4	3.27	.44	.60	.75	33.4	9.8	3.45	.45	.61	.77
HS29-036 - CB29M-41 - CB28UH-036 COOLING CAPACITY - TXV Systems Only																										
63°F (17°C)	1000	470	34.3	10.1	2.68	.73	.86	.97	32.6	9.6	2.88	.74	.88	.99	30.8	9.0	3.06	.76	.91	1.00	29.0	8.5	3.21	.78	.93	1.00
	1200	565	35.4	10.4	2.72	.77	.91	1.00	33.6	9.8	2.92	.78	.93	1.00	31.8	9.3	3.10	.81	.96	1.00	30.0	8.8	3.27	.83	.98	1.00
	1400	660	36.3	10.6	2.75	.80	.96	1.00	34.5	10.1	2.96	.83	.97	1.00	32.7	9.6	3.15	.85	.99	1.00	30.9	9.1	3.33	.88	1.00	1.00
67°F (19°C)	1000	470	36.6	10.7	2.76	.57	.70	.83	34.8	10.2	2.96	.58	.71	.85	32.8	9.6	3.15	.59	.73	.87	30.8	9.0	3.32	.60	.76	.90
	1200	565	37.5	11.0	2.79	.59	.74	.88	35.6	10.4	3.00	.60	.76	.90	33.6	9.8	3.19	.61	.78	.93	31.5	9.2	3.36	.63	.81	.96
	1400	660	38.3	11.2	2.82	.61	.78	.93	36.3	10.6	3.03	.63	.80	.95	34.2	10.0	3.22	.64	.83	.97	32.1	9.4	3.39	.66	.86	.99
71°F (22°C)	1000	470	39.1	11.5	2.84	.43	.55	.67	37.2	10.9	3.06	.43	.56	.69	35.2	10.3	3.26	.43	.57	.71	33.0	9.7	3.44	.44	.58	.73
	1200	565	40.1	11.8	2.88	.43	.57	.72	38.1	11.2	3.10	.44	.59	.73	35.9	10.5	3.30	.44	.60	.76	33.7	9.9	3.48	.45	.62	.78
	1400	660	40.8	12.0	2.90	.44	.60	.76	38.7	11.3	3.12	.45	.61	.78	36.5	10.7	3.33	.45	.63	.80	34.2	10.0	3.51	.46	.65	.83
HS29-036 - CB30M-31 - CB30U-31 COOLING CAPACITY - TXV Systems Only																										
63°F (17°C)	1050	495	35.3	10.3	2.77	.73	.87	.98	33.5	9.8	2.97	.75	.89	1.00	31.5	9.2	3.16	.77	.92	1.00	29.6	8.7	3.32	.79	.95	1.00
	1150	545	35.9	10.5	2.79	.75	.90	1.00	34.0	10.0	2.99	.77	.92	1.00	32.1	9.4	3.18	.79	.95	1.00	30.1	8.8	3.35	.82	.97	1.00
	1250	590	36.4	10.7	2.80	.77	.92	1.00	34.5	10.1	3.01	.79	.95	1.00	32.6	9.6	3.21	.82	.97	1.00	30.7	9.0	3.38	.84	.99	1.00
67°F (19°C)	1050	495	37.7	11.0	2.85	.57	.71	.84	35.7	10.5	3.06	.58	.72	.86	33.7	9.9	3.26	.59	.74	.88	31.5	9.2	3.43	.61	.77	.91
	1150	545	38.2	11.2	2.87	.58	.73	.86	36.2	10.6	3.08	.59	.74	.89	34.1	10.0	3.28	.61	.77	.91	31.9	9.3	3.45	.62	.79	.94
	1250	590	38.7	11.3	2.88	.59	.75	.89	36.6	10.7	3.10	.61	.77	.91	34.5	10.1	3.30	.62	.79	.94	32.2	9.4	3.47	.64	.82	.97
71°F (22°C)	1050	495	40.4	11.8	2.94	.43	.55	.68	38.3	11.2	3.17	.43	.56	.70	36.1	10.6	3.38	.43	.58	.72	33.8	9.9	3.56	.44	.59	.74
	1150	545	40.9	12.0	2.96	.43	.57	.70	38.7	11.3	3.19	.43	.58	.72	36.5	10.7	3.40	.44	.59	.74	34.2	10.0	3.58	.44	.61	.77
	1250	590	41.3	12.1	2.97	.44	.58	.72	39.1	11.5	3.20	.44	.59	.74	36.8	10.8	3.42	.44	.61	.77	34.5	10.1	3.60	.45	.62	.79
HS29-036 - CB29M46 - CB29UH-042 COOLING CAPACITY - TXV Systems Only																										
63°F (17°C)	1000	470	36.1	10.6	2.77	.72	.86	.97	34.2	10.0	2.97	.74	.88	.99	32.3	9.5	3.16	.76	.90	1.00	30.2	8.9	3.32	.78	.93	1.00
	1200	565	37.3	10.9	2.81	.76	.91	1.00	35.3	10.3	3.02	.78	.93	1.00	33.4	9.8	3.21	.80	.96	1.00	31.3	9.2	3.38	.83	.98	1.00
	1400	660	38.3	11.2	2.84	.80	.96	1.00	36.3	10.6	3.06	.82	.98	1.00	34.4	10.1	3.26	.85	1.00	1.00	32.5	9.5	3.45	.88	1.00	1.00
67°F (19°C)	1000	470	38.6	11.3	2.85	.57	.69	.82	36.6	10.7	3.07	.57	.71	.84	34.5	10.1	3.26	.58	.73	.87	32.3	9.5	3.44	.60	.75	.90
	1200	565	39.7	11.6	2.89	.59	.74	.88	37.5	11.0	3.11	.60	.76	.90	35.3	10.3	3.31	.61	.78	.93	33.1	9.7	3.48	.63	.81	.96
	1400	660	40.5	11.9	2.92	.61	.78	.93	38.3	11.2	3.14	.63	.80	.95	36.0	10.6	3.34	.64	.83	.98	33.7	9.9	3.52	.66	.86	1.00
71°F (22°C)	1000	470	41.3	12.1	2.95	.43	.55	.67	39.2	11.5	3.17	.43	.56	.68	37.0	10.8	3.38	.43	.57	.70	34.6	10.1	3.57	.44	.58	.73
	1200	565	42.4	12.4	2.98	.43	.57	.71	40.2	11.8	3.21	.44	.58	.73	37.8	11.1	3.42	.44	.60	.75	35.4	10.4	3.61	.45	.62	.78
	1400	660	43.2	12.7	3.01	.44	.60	.75	40.9	12.0	3.24	.45	.61	.78	38.5	11.3	3.45	.45	.63	.80	36.0	10.6	3.64	.46	.65	.83
HS29-036 - CB30M-41 - CB30U-41/46 COOLING CAPACITY - TXV Systems Only																										
63°F (17°C)	1000	470	36.3	10.6	2.88	.72	.86	.97	34.4	10.1	3.09	.74	.88	.99	32.4	9.5	3.29	.75	.90	1.00	30.3	8.9	3.46	.78	.93	1.00
	1200	565	37.5	11.0	2.93	.76	.91	1.00	35.5	10.4	3.15	.78	.93	1.00	33.5	9.8	3.35	.80	.96	1.00	31.5	9.2	3.53	.83	.99	1.00
	1400	660	38.5	11.3	2.96	.80	.96	1.00	36.5	10.7	3.19	.82	.98	1.00	34.6	10.1	3.40	.85	1.00	1.00	32.6	9.6	3.59	.88	1.00	1.00
67°F (19°C)	1000	470	38.8	11.4	2.97	.56	.69	.82	36.8	10.8	3.20	.57	.71	.84	34.6	10.1	3.40	.58	.73	.87	32.4	9.5	3.58	.60	.75	.90
	1200	565	39.9	11.7	3.01	.59	.74	.88	37.8	11.1	3.24	.60	.75	.90	35.5	10.4	3.45	.61	.78	.93	33.2	9.7	3.63	.63	.80	.96
	1400	660	40.8	12.0	3.04	.61	.78	.93	38.5	11.3	3.27	.63	.80	.95	36.2	10.6	3.48	.64	.83	.98	33.9	9.9	3.67	.66	.85	1.00
71°F (22°C)	1000	470	41.6	12.2	3.07	.42	.55	.67	39.4	11.5	3.31	.43	.56	.68	37.2	10.9	3.53	.43	.57	.70	34.8	10.2	3.72	.44	.58	.72
	1200	565	42.7	12.5	3.11	.43	.57	.71	40.4	11.8	3.35	.44	.58	.73	38.1	11.2	3.57	.44	.60	.75	35.6	10.4	3.77	.45	.61	.78
	1400	660	43.5	12.7	3.14	.44	.60	.75	41.1	12.0	3.38	.45	.61	.78	38.7	11.3	3.61	.45	.63	.80	36.2	10.6	3.80	.46	.65	.83
HS29-036 - CB30M-46 COOLING CAPACITY - TXV Systems Only																										
63°F (17°C)	1000	470	36.1	10.6	2.75	.72	.86	.97	34.2	10.0	2.95	.74	.88	.99	32.3	9.5	3.14	.75	.90	1.00	30.2	8.9	3.30	.78	.93	1.00
	1200	565	37.4	11.0	2.79	.76	.91	1.00	35.4	10.4	3.00	.78	.93	1.00	33.4	9.8	3.19	.80	.96	1.00	31.3	9.2	3.36	.83	.99	1.00
	1400	660	38.4	11.3	2.83	.80	.96	1.00	36.4	10.7	3.04	.82	.98	1.00	34.4	10.1	3.24	.85	1.00	1.00	32.5	9.5	3.43	.88	1.00	1.00
67°F (19°C)	1000	470	38.7	11.3	2.84	.56	.69	.82	36.6	10.7	3.05	.57	.71	.84	34.5	10.1	3.25	.58	.73	.87	32.3	9.5	3.42	.60	.75	.90
	1200	565	39.8	11.7	2.87	.59	.74	.88	37.6	11.0	3.09	.60	.75	.90	35.4	10.4	3.29	.61	.78	.93	33.1	9.7	3.46	.63	.80	.96
	1400	660	40.6	11.9	2.90	.61	.78	.93	38.4	11.3	3.12	.63	.80	.95	36.1	10.6	3.32	.64	.83	.98	33.8	9.9	3.50	.66	.85	1.00
71°F (22°C)	1000	470	41.4	12.1	2.93	.42	.55	.67	39.3	11.5	3.16	.43	.56	.68	37.0	10.8	3.37	.43	.57	.70	34.7	10.2	3.55	.44	.58	.72
	1200	565	42.5	12.5	2.97	.43	.57	.71	40.2	11.8	3.20	.44	.58	.73	37.9	11.1	3.41	.44	.60	.75	35.4	10.4	3.60	.45	.61	.78
	1400	660	43.3	12.7	3.00	.44	.60	.75	41.0	12.0	3.23	.45	.61	.78	38.5	11.3	3.44	.45	.63	.80	36.0	10.6	3.63	.46	.65	.83
HS29-036 - CB31MV-41 COOLING CAPACITY - TXV Systems Only																										
63°F (17°C)	1135	535	36.6	10.7	2.77	.75	.90	1.00	34.6	10.1	2.98	.77	.92	1.00	32.7	9.6	3.17	.79	.95	1.00	30.7	9.0	3.34	.82	.97	1.00
	1275	600	37.3	10.9	2.80	.78	.93	1.00	35.3	10.3	3.00	.80	.95	1.00	33.3	9.8	3.20	.82	.98	1.00	31.3	9.2	3.37	.85	1.00	1.00
	1400	660	37.9	11.1	2.82	.80	.96	1.00	35.9	10.5	3.03	.82	.98	1.00	34.0	10.0	3.23	.85	1.00	1.00	32.0	9.4	3.42	.88	1.00	1.00
67°F (19°C)	1135	535	39.0	11.4	2.86	.58	.72	.86	36.9	10.8	3.07	.59	.74	.89	34.7	10.2	3.27	.61	.77	.91	32.5	9.5	3.44	.62	.79	.94
	1275	600	39.6	11.6	2.87	.60	.75	.90	37.4	11.0	3.09	.61	.77	.92	35.2	10.3	3.29	.62	.80	.95	32.9	9.6	3.46	.64	.82	.98
	1400	660	40.1	11.8	2.89	.61	.78	.93	37.9	11.1	3.11	.63	.80	.95	35.6	10.4	3.31	.64	.83	.98	33.3	9.8	3.49	.66	.85	1.00
71°F (22°C)	1135	535	41.7	12.2	2.95	.43	.56	.70	39.5	11.6	3.18	.43	.58	.72	37.2	10.9	3.39	.44	.59	.74	34.8	10.2	3.57	.44	.61	.77
	1275	600	42.3	12.4	2.97	.44	.58	.73	40.0	11.7	3.20	.44	.59	.75	37.7	11.0	3.41	.45	.61	.77	35.2	10.3	3.59	.45	.63	.80
	1400	660	42.8	12.5	2.98	.44	.60	.75	40.4	11.8	3.21	.45	.61	.78	38.0	11.1	3.43	.45	.63	.80	35.5	10.4	3.61	.46	.65	.83

NOTE - For Temperatures and Capacities not shown in tables, see bulletin - Cooling Unit Rating Table Correction Factor Data in Miscellaneous Engineering Data section.

Entering Wet Bulb Temperature	Total Air Volume		Outdoor Air Temperature Entering Outdoor Coil																							
			85°F (29°C)						95°F (35°C)						105°F (41°C)						115°F (46°C)					
			Total Cooling Capacity		Comp Motor kW Input	Sensible To Total Ratio (S/T) Dry Bulb			Total Cooling Capacity		Comp Motor kW Input	Sensible To Total Ratio (S/T) Dry Bulb			Total Cooling Capacity		Comp Motor kW Input	Sensible To Total Ratio (S/T) Dry Bulb			Total Cooling Capacity		Comp Motor kW Input	Sensible To Total Ratio (S/T) Dry Bulb		
	cfm	L/s	kBtuh	kW		75°F 24°C	80°F 27°C	85°F 29°C	kBtuh	kW		75°F 24°C	80°F 27°C	85°F 29°C	kBtuh	kW		75°F 24°C	80°F 27°C	85°F 29°C	kBtuh	kW		75°F 24°C	80°F 27°C	85°F 29°C
HS29-036 - CB30M-51 - CB30U-51 COOLING CAPACITY - TXV Systems Only																										
63°F (17°C)	1000	470	36.6	10.7	2.75	.72	.85	.97	34.6	10.1	2.96	.73	.87	.99	32.5	9.5	3.14	.75	.90	1.00	30.4	8.9	3.31	.78	.93	1.00
	1200	565	37.8	11.1	2.80	.76	.91	1.00	35.8	10.5	3.01	.78	.93	1.00	33.7	9.9	3.20	.80	.96	1.00	31.6	9.3	3.37	.83	.99	1.00
	1400	660	38.9	11.4	2.84	.80	.96	1.00	36.8	10.8	3.05	.82	.98	1.00	34.8	10.2	3.25	.85	1.00	1.00	32.8	9.6	3.44	.88	1.00	1.00
67°F (19°C)	1000	470	39.2	11.5	2.85	.56	.69	.82	37.1	10.9	3.06	.57	.71	.84	34.9	10.2	3.26	.58	.72	.86	32.6	9.6	3.43	.59	.75	.89
	1200	565	40.4	11.8	2.89	.59	.73	.87	38.2	11.2	3.11	.60	.75	.90	35.8	10.5	3.31	.61	.78	.93	33.4	9.8	3.48	.63	.80	.96
	1400	660	41.3	12.1	2.92	.61	.77	.93	39.0	11.4	3.14	.62	.80	.95	36.6	10.7	3.34	.64	.82	.98	34.1	10.0	3.52	.66	.86	1.00
71°F (22°C)	1000	470	42.0	12.3	2.95	.42	.54	.66	39.8	11.7	3.17	.43	.55	.68	37.5	11.0	3.38	.43	.56	.70	35.0	10.3	3.57	.43	.58	.72
	1200	565	43.2	12.7	2.99	.43	.57	.71	40.9	12.0	3.22	.44	.58	.73	38.4	11.3	3.43	.44	.60	.75	35.8	10.5	3.62	.45	.61	.78
	1400	660	44.1	12.9	3.02	.44	.60	.75	41.6	12.2	3.25	.45	.61	.77	39.1	11.5	3.46	.45	.63	.80	36.5	10.7	3.65	.46	.65	.83
HS29-036 - CB31MV-51 COOLING CAPACITY - TXV Systems Only																										
63°F (17°C)	1205	570	37.8	11.1	2.80	.76	.91	1.00	35.8	10.5	3.01	.78	.93	1.00	33.7	9.9	3.20	.80	.96	1.00	31.6	9.3	3.37	.83	.99	1.00
	1375	650	38.8	11.4	2.83	.79	.95	1.00	36.7	10.8	3.05	.82	.98	1.00	34.6	10.1	3.25	.84	1.00	1.00	32.6	9.6	3.43	.87	1.00	1.00
67°F (19°C)	1205	570	40.4	11.8	2.89	.59	.73	.87	38.1	11.2	3.11	.60	.75	.90	35.8	10.5	3.31	.61	.78	.93	33.4	9.8	3.48	.63	.80	.96
	1375	650	41.2	12.1	2.91	.61	.77	.92	38.8	11.4	3.14	.62	.79	.95	36.5	10.7	3.34	.64	.82	.98	34.0	10.0	3.51	.66	.85	1.00
71°F (22°C)	1205	570	43.2	12.7	2.99	.43	.57	.71	40.8	12.0	3.22	.44	.58	.73	38.4	11.3	3.43	.44	.60	.75	35.8	10.5	3.62	.45	.61	.78
	1375	650	44.0	12.9	3.01	.44	.59	.74	41.5	12.2	3.25	.45	.61	.77	39.0	11.4	3.46	.45	.62	.79	36.4	10.7	3.65	.46	.64	.83
HS29-036 - CVP10-41/EC10Q3 - CVP10-46/EC10Q4 COOLING CAPACITY - TXV Systems Only																										
63°F (17°C)	1000	470	35.4	10.4	2.82	.72	.85	.97	33.5	9.8	3.03	.73	.88	.99	31.6	9.3	3.21	.75	.90	1.00	29.6	8.7	3.38	.78	.93	1.00
	1200	565	36.6	10.7	2.86	.76	.91	1.00	34.7	10.2	3.08	.78	.93	1.00	32.7	9.6	3.27	.80	.96	1.00	30.7	9.0	3.45	.83	.98	1.00
	1400	660	37.6	11.0	2.90	.80	.95	1.00	35.7	10.5	3.12	.82	.98	1.00	33.8	9.9	3.32	.85	.99	1.00	31.9	9.3	3.51	.88	1.00	1.00
67°F (19°C)	1000	470	37.8	11.1	2.91	.56	.69	.82	35.9	10.5	3.12	.57	.71	.84	33.8	9.9	3.33	.58	.73	.86	31.7	9.3	3.50	.60	.75	.89
	1200	565	39.0	11.4	2.95	.59	.73	.87	36.9	10.8	3.17	.60	.75	.90	34.7	10.2	3.37	.61	.78	.93	32.5	9.5	3.55	.63	.80	.95
	1400	660	39.8	11.7	2.97	.61	.78	.92	37.6	11.0	3.20	.62	.80	.95	35.4	10.4	3.41	.64	.82	.97	33.1	9.7	3.59	.66	.85	1.00
71°F (22°C)	1000	470	40.5	11.9	3.00	.42	.54	.67	38.5	11.3	3.23	.43	.55	.68	36.3	10.6	3.45	.43	.57	.70	34.0	10.0	3.64	.44	.58	.72
	1200	565	41.7	12.2	3.04	.43	.57	.71	39.5	11.6	3.28	.44	.58	.73	37.2	10.9	3.49	.44	.60	.75	34.8	10.2	3.68	.45	.61	.78
	1400	660	42.5	12.5	3.07	.44	.60	.75	40.2	11.8	3.31	.45	.61	.77	37.8	11.1	3.53	.45	.63	.80	35.4	10.4	3.72	.46	.65	.83

NOTE - For Temperatures and Capacities not shown in tables, see bulletin - Cooling Unit Rating Table Correction Factor Data in Miscellaneous Engineering Data section.

Entering Wet Bulb Temperature	Total Air Volume		Outdoor Air Temperature Entering Outdoor Coil																							
			85°F (29°C)						95°F (35°C)						105°F (41°C)						115°F (46°C)					
			Total Cooling Capacity		Comp Motor kW Input	Sensible To Total Ratio (S/T) Dry Bulb			Total Cooling Capacity		Comp Motor kW Input	Sensible To Total Ratio (S/T) Dry Bulb			Total Cooling Capacity		Comp Motor kW Input	Sensible To Total Ratio (S/T) Dry Bulb			Total Cooling Capacity		Comp Motor kW Input	Sensible To Total Ratio (S/T) Dry Bulb		
	cfm	L/s	kBtuh	kW		75°F 24°C	80°F 27°C	85°F 29°C	kBtuh	kW		75°F 24°C	80°F 27°C	85°F 29°C	kBtuh	kW		75°F 24°C	80°F 27°C	85°F 29°C	kBtuh	kW		75°F 24°C	80°F 27°C	85°F 29°C
HS29-042 - C33-42B COOLING CAPACITY - TXV Systems Only																										
63°F (17°C)	1250	590	38.5	11.3	3.08	.77	.90	1.00	37.0	10.8	3.41	.78	.92	1.00	35.6	10.4	3.79	.79	.94	1.00	34.2	10.0	4.21	.81	.96	1.00
	1400	660	39.0	11.4	3.10	.79	.94	1.00	37.8	11.1	3.43	.80	.95	1.00	36.4	10.7	3.81	.82	.97	1.00	35.0	10.3	4.22	.83	.99	1.00
	1550	730	40.0	11.7	3.11	.82	.97	1.00	38.5	11.3	3.45	.83	.98	1.00	37.2	10.9	3.82	.84	.99	1.00	35.6	10.4	4.24	.86	1.00	1.00
67°F (19°C)	1250	590	40.5	11.9	3.12	.62	.75	.87	39.0	11.4	3.46	.62	.76	.89	37.4	11.0	3.83	.63	.77	.91	36.0	10.6	4.26	.64	.79	.93
	1400	660	41.0	12.0	3.14	.63	.77	.91	39.5	11.6	3.47	.64	.78	.92	38.5	11.3	3.85	.65	.80	.94	36.8	10.8	4.27	.66	.81	.97
	1550	730	42.0	12.3	3.15	.65	.79	.94	40.5	11.9	3.49	.65	.81	.96	39.0	11.4	3.86	.66	.82	.98	37.4	11.0	4.29	.68	.84	.99
71°F (22°C)	1250	590	42.0	12.3	3.15	.48	.60	.73	40.5	11.9	3.49	.48	.61	.74	39.0	11.4	3.87	.48	.62	.75	37.6	11.0	4.30	.49	.63	.76
	1400	660	43.0	12.6	3.17	.49	.62	.75	41.5	12.2	3.51	.49	.63	.76	40.0	11.7	3.89	.49	.64	.78	38.5	11.3	4.32	.50	.65	.79
	1550	730	43.5	12.7	3.19	.49	.64	.77	42.0	12.3	3.53	.50	.64	.79	40.5	11.9	3.91	.50	.65	.80	39.0	11.4	4.34	.51	.67	.82
HS29-042 - C33-44C COOLING CAPACITY - TXV Systems Only																										
63°F (17°C)	1250	590	40.0	11.7	3.11	.75	.89	1.00	38.5	11.3	3.44	.77	.90	1.00	37.0	10.8	3.82	.78	.92	1.00	35.4	10.4	4.24	.79	.94	1.00
	1400	660	40.5	11.9	3.13	.78	.92	1.00	39.0	11.4	3.46	.79	.94	1.00	37.8	11.1	3.84	.80	.96	1.00	36.2	10.6	4.26	.82	.98	1.00
	1550	730	41.5	12.2	3.14	.80	.95	1.00	40.0	11.7	3.48	.81	.97	1.00	38.5	11.3	3.86	.83	.99	1.00	37.0	10.8	4.28	.85	1.00	1.00
67°F (19°C)	1250	590	42.0	12.3	3.16	.61	.73	.86	40.5	11.9	3.49	.61	.74	.87	39.0	11.4	3.87	.62	.76	.89	37.4	11.0	4.30	.63	.77	.91
	1400	660	43.0	12.6	3.17	.62	.76	.89	41.5	12.2	3.51	.63	.77	.90	40.0	11.7	3.88	.63	.78	.92	38.0	11.1	4.32	.64	.80	.95
	1550	730	43.5	12.7	3.19	.63	.78	.92	42.0	12.3	3.52	.64	.79	.94	40.5	11.9	3.91	.65	.81	.96	39.0	11.4	4.33	.66	.83	.98
71°F (22°C)	1250	590	44.0	12.9	3.20	.47	.59	.71	42.5	12.5	3.54	.47	.60	.72	41.0	12.0	3.92	.48	.61	.74	39.5	11.6	4.34	.48	.61	.75
	1400	660	45.0	13.2	3.22	.48	.61	.74	43.5	12.7	3.56	.48	.61	.75	42.0	12.3	3.94	.48	.62	.76	40.0	11.7	4.37	.49	.63	.78
	1550	730	46.0	13.5	3.23	.48	.62	.76	44.0	12.9	3.57	.49	.63	.77	42.5	12.5	3.96	.49	.64	.79	41.0	12.0	4.39	.50	.65	.80
HS29-042 - C33-48B/C COOLING CAPACITY - TXV Systems Only																										
63°F (17°C)	1250	590	40.0	11.7	3.12	.75	.88	1.00	38.5	11.3	3.45	.76	.89	1.00	37.2	10.9	3.82	.77	.91	1.00	35.8	10.5	4.25	.79	.93	1.00
	1400	660	41.0	12.0	3.13	.78	.91	1.00	39.5	11.6	3.47	.78	.93	1.00	38.0	11.1	3.84	.80	.95	1.00	36.6	10.7	4.27	.81	.97	1.00
	1550	730	42.0	12.3	3.15	.80	.94	1.00	40.5	11.9	3.49	.81	.96	1.00	39.0	11.4	3.86	.82	.98	1.00	37.2	10.9	4.29	.84	1.00	1.00
67°F (19°C)	1250	590	42.0	12.3	3.16	.60	.73	.85	41.0	12.0	3.50	.61	.74	.86	39.5	11.6	3.88	.61	.76	.88	37.8	11.1	4.30	.62	.76	.90
	1400	660	43.0	12.6	3.18	.62	.75	.88	41.5	12.2	3.51	.62	.76	.90	40.0	11.7	3.89	.63	.78	.92	38.5	11.3	4.32	.64	.79	.94
	1550	730	44.0	12.9	3.19	.63	.77	.91	42.5	12.5	3.53	.64	.79	.93	41.0	12.0	3.91	.65	.80	.95	39.0	11.4	4.34	.66	.82	.97
71°F (22°C)	1250	590	44.5	13.0	3.20	.47	.59	.70	43.0	12.6	3.54	.47	.60	.72	41.5	12.2	3.92	.48	.60	.73	39.5	11.6	4.36	.48	.61	.74
	1400	660	45.5	13.3	3.23	.48	.60	.73	44.0	12.9	3.56	.48	.61	.74	42.0	12.3	3.95	.48	.62	.76	40.5	11.9	4.38	.49	.63	.77
	1550	730	46.0	13.5	3.24	.48	.63	.75	44.5	13.0	3.58	.48	.63	.77	43.0	12.6	3.97	.49	.64	.78	41.0	12.0	4.40	.50	.65	.80
HS29-042 - C33-50/60C COOLING CAPACITY - TXV Systems Only																										
63°F (17°C)	1250	590	40.5	11.9	3.12	.76	.88	1.00	39.0	11.4	3.45	.77	.90	1.00	37.6	11.0	3.84	.77	.92	1.00	36.0	10.6	4.26	.79	.94	1.00
	1400	660	41.5	12.2	3.14	.77	.92	1.00	40.0	11.7	3.48	.79	.94	1.00	38.5	11.3	3.86	.80	.95	1.00	37.0	10.8	4.28	.82	.97	1.00
	1550	730	42.0	12.3	3.16	.80	.95	1.00	40.5	11.9	3.50	.82	.97	1.00	39.0	11.4	3.87	.83	.99	1.00	37.6	11.0	4.30	.85	1.00	1.00
67°F (19°C)	1250	590	42.5	12.5	3.17	.61	.73	.85	41.0	12.0	3.51	.61	.75	.87	39.5	11.6	3.88	.62	.75	.89	38.0	11.1	4.31	.63	.77	.91
	1400	660	43.5	12.7	3.18	.62	.75	.89	42.0	12.3	3.52	.63	.76	.90	40.5	11.9	3.90	.64	.78	.92	39.0	11.4	4.33	.65	.80	.94
	1550	730	44.5	13.0	3.20	.63	.78	.92	42.5	12.5	3.54	.64	.79	.94	41.0	12.0	3.92	.65	.81	.96	39.5	11.6	4.35	.66	.83	.98
71°F (22°C)	1250	590	45.0	13.2	3.22	.47	.59	.71	43.5	12.7	3.55	.47	.60	.72	41.5	12.2	3.94	.48	.61	.73	40.0	11.7	4.37	.48	.62	.75
	1400	660	46.0	13.5	3.24	.48	.61	.74	44.0	12.9	3.57	.48	.61	.74	42.5	12.5	3.95	.48	.62	.76	41.0	12.0	4.39	.48	.63	.78
	1550	730	46.5	13.6	3.25	.48	.62	.76	45.0	13.2	3.59	.49	.63	.77	43.5	12.7	3.98	.49	.64	.79	41.5	12.2	4.40	.50	.65	.80
HS29-042 - C33-60D COOLING CAPACITY - TXV Systems Only																										
63°F (17°C)	1250	590	41.0	12.0	3.13	.76	.89	1.00	39.5	11.6	3.46	.77	.91	1.00	38.0	11.1	3.85	.79	.93	1.00	36.4	10.7	4.27	.80	.95	1.00
	1400	660	42.0	12.3	3.15	.79	.93	1.00	40.5	11.9	3.49	.80	.95	1.00	39.0	11.4	3.87	.81	.97	1.00	37.2	10.9	4.29	.83	.99	1.00
	1550	730	42.5	12.5	3.17	.81	.96	1.00	41.0	12.0	3.51	.82	.98	1.00	39.5	11.6	3.88	.84	1.00	1.00	38.0	11.1	4.31	.86	1.00	1.00
67°F (19°C)	1250	590	43.0	12.6	3.17	.61	.74	.86	41.5	12.2	3.51	.62	.75	.88	40.0	11.7	3.89	.63	.76	.90	38.0	11.1	4.32	.64	.78	.92
	1400	660	44.0	12.9	3.19	.63	.76	.90	42.5	12.5	3.53	.63	.78	.92	41.0	12.0	3.91	.64	.79	.93	39.0	11.4	4.34	.66	.81	.96
	1550	730	44.5	13.0	3.21	.64	.79	.93	43.0	12.6	3.55	.65	.80	.95	41.5	12.2	3.93	.66	.82	.97	40.0	11.7	4.36	.67	.84	.99
71°F (22°C)	1250	590	45.0	13.2	3.22	.47	.60	.72	43.5	12.7	3.56	.47	.61	.73	42.0	12.3	3.94	.48	.61	.74	40.5	11.9	4.37	.48	.62	.76
	1400	660	46.0	13.5	3.24	.48	.61	.74	44.5	13.0	3.58	.48	.61	.76	43.0	12.6	3.96	.49	.62	.77	41.0	12.0	4.39	.49	.64	.79
	1550	730	47.0	13.8	3.26	.49	.63	.77	45.5	13.3	3.60	.49	.64	.78	43.5	12.7	3.98	.50	.65	.80	42.0	12.3	4.41	.50	.66	.82
HS29-042 - C33-44C with G61MPV-60C COOLING CAPACITY - TXV Systems Only																										
63°F (17°C)	1275	600	40.0	11.7	3.11	.75	.89	1.00	38.5	11.3	3.44	.77	.90	1.00	37.0	10.8	3.82	.78	.92	1.00	35.4	10.4	4.24	.79	.94	1.00
	1455	685	40.5	11.9	3.13	.78	.93	1.00	39.5	11.6	3.46	.79	.94	1.00	37.8	11.1	3.84	.81	.96	1.00	36.4	10.7	4.26	.83	.98	1.00
	1585	750	41.5	12.2	3.14	.80	.96	1.00	40.0	11.7	3.48	.82	.97	1.00	38.5	11.3	3.86	.83	.99	1.00	37.0	10.8	4.28	.85	1.00	1.00
67°F (19°C)	1275	600	42.0	12.3	3.16	.60	.73	.86	40.5	11.9	3.49	.61	.74	.87	39.0	11.4	3.87	.62	.76	.89	37.4	11.0	4.30	.62	.77	.91
	1455	685	43.0	12.6	3.18	.62	.76	.90	41.5	12.2	3.51	.63	.77	.91	40.0	11.7	3.89	.63	.79	.93	38.5	11.3	4.32	.65	.80	.95
	1585	750	43.5	12.7	3.19	.63	.78	.93	42.0	12.3	3.53	.64	.79	.94	40.5	11.9	3.91	.65	.81	.97	39.0	11.4	4.33	.66	.83	.99
71°F (22°C)	1275	600	44.0	12.9	3.20	.47	.59	.71	42.5	12.5	3.54	.47	.60	.72	41.0	12.0	3.93	.47	.61	.73	39.5	11.6	4.34	.48	.61	.75
	1455	685	45.5	13.3	3.23	.47	.61	.74	43.5	12.7	3.56	.48	.61	.75	42.0	12.3	3.94	.48	.62	.76	40.5	11.9	4.37	.49	.63	.78
	1585	750	46.0	13.5	3.24	.48	.62	.76	44.5	13.0	3.58	.48	.63	.77	42.5	12.5	3.95	.49	.64	.79	41.0	12.0	4.39	.49	.65	.81
HS29-042 - C33-44C with G60UHV-60C COOLING CAPACITY - TXV Systems Only																										
63°F (17°C)	1335	630	40.0	11.7	3.12	.76	.90	1.00	38.5	11.3	3.45	.78	.92	1.00	37.2	10.9	3.82	.79	.93	1.00	35.8	10.5	4.25	.80	.96	1.00
	1485	700	41.0	12.0	3.13	.79	.93	1.00	39.5	11.6	3.47	.79	.95	1.00	38.0	11.1	3.85	.81	.97	1.00	36.6	10.7	4.27	.83	.99	1.00
	1630	770	41.5	12.2	3.15	.81	.96	1.00	40.0	11.7	3.49	.82	.98	1.00	38.5	11.3	3.86	.84	1.00	1.00	37.0	10.8	4.28	.85	1.00	1.00
67°F (19°C)	1335	630	42.5	12.5	3.16	.61	.74	.87	41.0	12.0	3.50	.62	.75	.89	39.5	11.6	3.88	.62	.76	.90	37.8	11.1	4.30	.63	.78	.92
	1485	700	43.0	12.6	3.18	.63	.77	.90	41.5	12.2	3.52	.63	.77	.92	40.0	11.7	3.90	.64	.79	.94	38.5	11.3	4.32	.65	.81	.96
	1630	770	44.0	12.9	3.19	.63	.78	.93	42.5	12.5	3.53	.64	.80	.95	40.5	11.9	3.91	.65	.82	.97	39.0	11.4	4.34	.66	.83	.99
71°F (22°C)	1335	630	44.5	13.0	3.21	.47	.59	.72	43.0	12.6	3.55	.47	.60	.73	41.5	12.2	3.93	.48	.61	.75	39.5	11.6	4.35	.48	.62	.76
	1485	700	45.5	13.3	3.23	.47	.61	.74	43.5	12.7	3.56	.48	.62	.76	42.0	12.3	3.95	.48	.62	.76	40.5	11.9	4.38	.49	.64	.79
	1630	770	46.0	13.5	3.24	.48	.62	.76	44.5	13.0	3.58	.48	.63	.78	43.0	12.6	3.96	.49	.64	.80	41.0	12.0	4.39	.49	.65	.81

NOTE - For Temperatures and Capacities not shown in tables, see bulletin - Cooling Unit Rating Table Correction Factor Data in Miscellaneous Engineering Data section.

Entering Wet Bulb Temperature	Total Air Volume		Outdoor Air Temperature Entering Outdoor Coil																							
			85°F (29°C)						95°F (35°C)						105°F (41°C)						115°F (46°C)					
			Total Cooling Capacity		Comp Motor kW Input	Sensible To Total Ratio (S/T) Dry Bulb			Total Cooling Capacity		Comp Motor kW Input	Sensible To Total Ratio (S/T) Dry Bulb			Total Cooling Capacity		Comp Motor kW Input	Sensible To Total Ratio (S/T) Dry Bulb			Total Cooling Capacity		Comp Motor kW Input	Sensible To Total Ratio (S/T) Dry Bulb		
	cfm	L/s	kBtuh	kW		75°F 24°C	80°F 27°C	85°F 29°C	kBtuh	kW		75°F 24°C	80°F 27°C	85°F 29°C	kBtuh	kW		75°F 24°C	80°F 27°C	85°F 29°C	kBtuh	kW		75°F 24°C	80°F 27°C	85°F 29°C
HS29-042 - C33-48C with G60UHV-60C COOLING CAPACITY - TXV Systems Only																										
63°F (17°C)	1335	630	40.5	11.9	3.12	.76	.89	1.00	39.0	11.4	3.46	.77	.91	1.00	37.6	11.0	3.84	.78	.93	1.00	36.2	10.6	4.26	.80	.95	1.00
	1485	700	41.5	12.2	3.14	.78	.92	1.00	40.0	11.7	3.48	.79	.94	1.00	38.5	11.3	3.86	.81	.96	1.00	36.8	10.8	4.28	.82	.98	1.00
	1630	770	42.0	12.3	3.15	.80	.95	1.00	40.5	11.9	3.49	.82	.97	1.00	39.0	11.4	3.87	.83	.99	1.00	37.4	11.0	4.30	.85	1.00	1.00
67°F (19°C)	1335	630	42.5	12.5	3.17	.61	.74	.86	41.0	12.0	3.51	.61	.75	.88	39.5	11.6	3.88	.62	.76	.89	38.0	11.1	4.31	.63	.77	.91
	1485	700	43.5	12.7	3.19	.62	.76	.89	42.0	12.3	3.52	.63	.77	.91	40.5	11.9	3.90	.64	.79	.93	38.5	11.3	4.33	.65	.80	.95
	1630	770	44.0	12.9	3.20	.63	.78	.92	42.5	12.5	3.54	.64	.79	.94	41.0	12.0	3.92	.65	.81	.96	39.5	11.6	4.35	.66	.83	.98
71°F (22°C)	1335	630	45.0	13.2	3.22	.47	.59	.72	43.5	12.7	3.55	.47	.60	.73	41.5	12.2	3.94	.47	.61	.74	40.0	11.7	4.37	.47	.62	.75
	1485	700	46.0	13.5	3.24	.48	.61	.74	44.0	12.9	3.57	.48	.61	.75	42.5	12.5	3.95	.48	.62	.76	41.0	12.0	4.39	.49	.63	.78
	1630	770	46.5	13.6	3.25	.48	.62	.76	45.0	13.2	3.59	.48	.63	.77	43.0	12.6	3.97	.48	.64	.79	41.5	12.2	4.40	.49	.65	.81
HS29-042 - C33-48C with G61MPV-60C COOLING CAPACITY - TXV Systems Only																										
63°F (17°C)	1275	600	40.0	11.7	3.12	.75	.88	1.00	38.5	11.3	3.45	.76	.89	1.00	37.2	10.9	3.82	.77	.91	1.00	35.8	10.5	4.25	.78	.93	1.00
	1455	685	41.0	12.0	3.14	.78	.92	1.00	39.5	11.6	3.47	.79	.94	1.00	38.5	11.3	3.85	.80	.95	1.00	36.8	10.8	4.27	.82	.97	1.00
	1585	750	42.0	12.3	3.15	.80	.95	1.00	40.5	11.9	3.49	.81	.96	1.00	39.0	11.4	3.87	.83	.98	1.00	37.4	11.0	4.29	.84	1.00	1.00
67°F (19°C)	1275	600	42.0	12.3	3.16	.60	.73	.85	41.0	12.0	3.50	.61	.74	.86	39.5	11.6	3.88	.61	.75	.88	37.8	11.1	4.30	.62	.76	.90
	1455	685	43.5	12.7	3.19	.62	.75	.89	42.0	12.3	3.52	.63	.77	.91	40.5	11.9	3.90	.63	.78	.92	38.5	11.3	4.33	.64	.80	.94
	1585	750	44.0	12.9	3.20	.63	.78	.92	42.5	12.5	3.53	.64	.79	.93	41.0	12.0	3.91	.65	.81	.95	39.0	11.4	4.34	.66	.82	.97
71°F (22°C)	1275	600	44.5	13.0	3.21	.47	.59	.70	43.0	12.6	3.55	.47	.59	.72	41.5	12.2	3.93	.47	.60	.73	40.0	11.7	4.36	.47	.61	.74
	1455	685	45.5	13.3	3.23	.48	.60	.74	44.0	12.9	3.57	.48	.62	.74	42.5	12.5	3.95	.48	.62	.76	40.5	11.9	4.39	.49	.63	.77
	1585	750	46.5	13.6	3.25	.48	.62	.75	44.5	13.0	3.58	.48	.62	.77	43.0	12.6	3.97	.49	.64	.78	41.5	12.2	4.40	.49	.65	.80
HS29-042 - C33-50/60C with G60UHV-60C COOLING CAPACITY - TXV Systems Only																										
63°F (17°C)	1335	630	41.0	12.0	3.13	.77	.90	1.00	39.5	11.6	3.47	.77	.92	1.00	38.0	11.1	3.85	.79	.93	1.00	36.4	10.7	4.27	.80	.95	1.00
	1485	700	41.5	12.2	3.15	.78	.93	1.00	40.0	11.7	3.48	.80	.95	1.00	38.5	11.3	3.86	.81	.97	1.00	37.2	10.9	4.29	.83	.99	1.00
	1630	770	42.5	12.5	3.17	.81	.96	1.00	41.0	12.0	3.50	.82	.98	1.00	39.5	11.6	3.88	.84	1.00	1.00	37.8	11.1	4.30	.85	1.00	1.00
67°F (19°C)	1335	630	43.0	12.6	3.18	.61	.74	.87	41.5	12.2	3.51	.61	.75	.88	40.0	11.7	3.89	.62	.76	.90	38.5	11.3	4.32	.63	.78	.92
	1485	700	43.5	12.7	3.19	.63	.76	.90	42.5	12.5	3.53	.63	.78	.92	40.5	11.9	3.91	.64	.79	.94	39.0	11.4	4.34	.65	.81	.96
	1630	770	44.5	13.0	3.21	.64	.79	.93	43.0	12.6	3.54	.65	.80	.95	41.5	12.2	3.93	.66	.82	.97	39.5	11.6	4.35	.67	.83	.99
71°F (22°C)	1335	630	45.0	13.2	3.22	.47	.59	.72	44.0	12.9	3.57	.47	.61	.73	42.0	12.3	3.95	.47	.61	.74	40.5	11.9	4.38	.48	.62	.76
	1485	700	46.0	13.5	3.24	.47	.61	.74	44.5	13.0	3.58	.47	.62	.76	43.0	12.6	3.97	.48	.63	.77	41.0	12.0	4.39	.49	.64	.79
	1630	770	46.5	13.6	3.25	.48	.62	.77	45.0	13.2	3.60	.48	.63	.78	43.5	12.7	3.98	.49	.64	.80	41.5	12.2	4.41	.49	.66	.81
HS29-042 - C33-50/60C with G61MPV-60C COOLING CAPACITY - TXV Systems Only																										
63°F (17°C)	1275	600	40.5	11.9	3.12	.75	.89	1.00	39.0	11.4	3.46	.77	.90	1.00	37.6	11.0	3.84	.77	.92	1.00	36.0	10.6	4.26	.79	.94	1.00
	1455	685	41.5	12.2	3.15	.78	.93	1.00	40.0	11.7	3.48	.80	.94	1.00	38.5	11.3	3.86	.81	.96	1.00	37.0	10.8	4.28	.83	.98	1.00
	1585	750	42.5	12.5	3.16	.80	.95	1.00	41.0	12.0	3.50	.82	.97	1.00	39.5	11.6	3.87	.83	.99	1.00	37.6	11.0	4.30	.85	1.00	1.00
67°F (19°C)	1275	600	42.5	12.5	3.17	.61	.73	.85	41.5	12.2	3.51	.61	.75	.87	39.5	11.6	3.88	.62	.75	.89	38.0	11.1	4.31	.62	.77	.91
	1455	685	43.5	12.7	3.19	.62	.76	.90	42.0	12.3	3.53	.63	.77	.91	40.5	11.9	3.91	.64	.79	.93	39.0	11.4	4.33	.65	.80	.95
	1585	750	44.5	13.0	3.20	.63	.78	.92	43.0	12.6	3.54	.64	.80	.94	41.0	12.0	3.93	.65	.81	.96	39.5	11.6	4.35	.66	.83	.98
71°F (22°C)	1275	600	45.0	13.2	3.22	.47	.59	.71	43.5	12.7	3.55	.47	.59	.72	41.5	12.2	3.94	.48	.60	.73	40.0	11.7	4.37	.47	.61	.75
	1455	685	46.0	13.5	3.24	.47	.61	.74	44.5	13.0	3.58	.48	.62	.75	43.0	12.6	3.96	.48	.63	.77	41.0	12.0	4.39	.49	.64	.78
	1585	750	46.5	13.6	3.25	.48	.62	.76	45.0	13.2	3.59	.48	.63	.77	43.5	12.7	3.98	.49	.64	.79	41.5	12.2	4.41	.49	.65	.81
HS29-042 - CR26-36N-F ONLY COOLING CAPACITY - TXV Systems Only																										
63°F (17°C)	800	380	35.0	10.3	3.01	.69	.80	.90	33.8	9.9	3.34	.70	.81	.91	32.6	9.6	3.71	.71	.82	.93	31.4	9.2	4.13	.72	.83	.95
	900	425	36.0	10.6	3.03	.71	.82	.93	34.8	10.2	3.37	.72	.84	.95	33.6	9.8	3.74	.73	.85	.96	32.2	9.4	4.15	.74	.86	.98
	1000	470	36.8	10.8	3.05	.73	.85	.96	35.6	10.4	3.38	.74	.86	.97	34.4	10.1	3.76	.75	.88	.99	33.0	9.7	4.17	.76	.89	1.00
67°F (19°C)	800	380	36.8	10.8	3.05	.56	.67	.76	35.6	10.4	3.38	.57	.67	.78	34.4	10.1	3.76	.57	.68	.79	33.2	9.7	4.17	.58	.69	.80
	900	425	38.0	11.1	3.07	.57	.68	.79	36.6	10.7	3.41	.58	.69	.80	35.4	10.4	3.78	.58	.70	.82	34.0	10.0	4.20	.59	.71	.83
	1000	470	39.0	11.4	3.09	.59	.70	.82	37.6	11.0	3.43	.59	.71	.83	36.2	10.6	3.80	.60	.72	.84	34.8	10.2	4.22	.60	.73	.86
71°F (22°C)	800	380	38.5	11.3	3.08	.44	.55	.64	37.4	11.0	3.42	.45	.55	.65	36.0	10.6	3.80	.45	.56	.66	34.8	10.2	4.22	.45	.56	.67
	900	425	40.0	11.7	3.11	.45	.56	.66	38.5	11.3	3.45	.45	.56	.67	37.2	10.9	3.83	.46	.57	.68	35.8	10.5	4.25	.46	.58	.69
	1000	470	40.5	11.9	3.13	.46	.57	.68	39.5	11.6	3.47	.46	.57	.69	38.0	11.1	3.85	.46	.58	.70	36.6	10.7	4.27	.46	.59	.71
HS29-042 - CR26-36W-F ONLY COOLING CAPACITY - TXV Systems Only																										
63°F (17°C)	1000	470	36.8	10.8	3.05	.73	.85	.96	35.6	10.4	3.38	.74	.86	.97	34.4	10.1	3.76	.75	.88	.99	33.0	9.7	4.17	.76	.89	1.00
	1200	565	38.5	11.3	3.08	.76	.90	1.00	37.0	10.8	3.41	.77	.91	1.00	35.6	10.4	3.79	.78	.93	1.00	34.2	10.0	4.20	.80	.95	1.00
	1400	660	39.5	11.6	3.10	.79	.94	1.00	38.0	11.1	3.44	.81	.95	1.00	36.6	10.7	3.81	.82	.97	1.00	35.2	10.3	4.23	.84	.99	1.00
67°F (19°C)	1000	470	39.0	11.4	3.09	.59	.70	.82	37.6	11.0	3.43	.59	.71	.83	36.2	10.6	3.80	.60	.72	.84	34.8	10.2	4.22	.60	.73	.86
	1200	565	40.5	11.9	3.12	.61	.74	.86	39.0	11.4	3.46	.61	.75	.88	37.4	11.0	3.83	.62	.76	.90	36.0	10.6	4.25	.63	.78	.92
	1400	660	41.5	12.2	3.14	.63	.77	.91	40.0	11.7	3.48	.64	.79	.93	38.5	11.3	3.86	.65	.80	.94	37.0	10.8	4.27	.66	.82	.96
71°F (22°C)	1000	470	40.5	11.9	3.13	.46	.57	.68	39.5	11.6	3.47	.46	.57	.69	38.0	11.1	3.85	.46	.58	.70	36.6	10.7	4.27	.46	.59	.71
	1200	565	42.5	12.5	3.16	.47	.59	.72	41.0	12.0	3.50	.47	.60	.73	39.5	11.6	3.88	.48	.61	.74	37.8	11.1	4.30	.48	.62	.75
	1400	660	43.5	12.7	3.18	.48	.62	.75	42.0	12.3	3.52	.48	.63	.77	40.5	11.9	3.90	.49	.64	.78	39.0	11.4	4.33	.49	.65	.80
HS29-042 - CR26-48N/W-F COOLING CAPACITY - TXV Systems Only																										
63°F (17°C)	1250	590	39.0	11.4	3.09	.75	.88	.99	37.8	11.1	3.43	.76	.90	1.00	36.4	10.7	3.81	.78	.92	1.00	35.0	10.3	4.22	.79	.94	1.00
	1400	660	40.0	11.7	3.11	.78	.91	1.00	38.5	11.3	3.45	.79	.93	1.00	37.2	10.9	3.82	.80	.95	1.00	35.6	10.4	4.24	.82	.97	1.00
	1550	730	40.5	11.9	3.13	.80	.95	1.00	39.0	11.4	3.46	.81	.96	1.00	37.8	11.1	3.84	.82	.98	1.00	36.4	10.7	4.26	.84	.99	1.00
67°F (19°C)	1250	590	41.0	12.0	3.14	.61	.73	.85	40.0	11.7	3.47	.62	.74	.87	38.5	11.3	3.86	.62	.75	.88	37.0	10.8	4.28	.63	.77	.90
	1400	660	42.0	12.3	3.16	.62	.75	.88	40.5	11.9	3.50	.63	.77	.90	39.0	11.4	3.87	.64	.78	.92	37.6	11.0	4.30	.65	.79	.94
	1550	730	43.0	12.6	3.17	.64	.78	.92	41.5	12.2	3.51	.64	.79	.93	40.0	11.7	3.89	.65	.80	.95	38.0	11.1	4.31	.66	.82	.97
71°F (22°C)	1250	590	43.5	12.7	3.19	.47	.59	.71	42.0	12.3	3.52	.47	.60	.72	40.5	11.9	3.90	.47	.61	.73	39.0	11.4	4.33	.48	.62	.75
	1400	660	44.5	13.0	3.20	.48	.61	.73	43.0	12.6	3.55	.48	.62	.74	41.5	12.2	3.93	.48	.63	.76	39.5	11.6	4.35	.49	.64	.77
	1550	730	45.0	13.2	3.22	.48	.62	.75	43.5	12.7	3.56	.48	.63	.77	42.0	12.3	3.94	.49	.64	.78	40.0	11.7	4.37	.50	.65	.80

NOTE - For Temperatures and Capacities not shown in tables, see bulletin - Cooling Unit Rating Table Correction Factor Data in Miscellaneous Engineering Data section.

Entering Wet Bulb Temperature	Total Air Volume		Outdoor Air Temperature Entering Outdoor Coil																							
			85°F (29°C)						95°F (35°C)						105°F (41°C)						115°F (46°C)					
			Total Cooling Capacity		Comp Motor kW Input	Sensible To Total Ratio (S/T) Dry Bulb			Total Cooling Capacity		Comp Motor kW Input	Sensible To Total Ratio (S/T) Dry Bulb			Total Cooling Capacity		Comp Motor kW Input	Sensible To Total Ratio (S/T) Dry Bulb			Total Cooling Capacity		Comp Motor kW Input	Sensible To Total Ratio (S/T) Dry Bulb		
	cfm	L/s	kBtuh	kW		75°F 24°C	80°F 27°C	85°F 29°C	kBtuh	kW		75°F 24°C	80°F 27°C	85°F 29°C	kBtuh	kW		75°F 24°C	80°F 27°C	85°F 29°C	kBtuh	kW		75°F 24°C	80°F 27°C	85°F 29°C
HS29-042 - CR26-60N/W-F COOLING CAPACITY - TXV Systems Only																										
63°F (17°C)	1250	590	40.0	11.7	3.12	.77	.90	1.00	39.0	11.4	3.45	.78	.92	1.00	37.4	11.0	3.83	.79	.94	1.00	35.8	10.5	4.25	.81	.96	1.00
	1400	660	41.0	12.0	3.13	.79	.94	1.00	39.5	11.6	3.47	.80	.96	1.00	38.0	11.1	3.85	.82	.97	1.00	36.6	10.7	4.27	.84	.99	1.00
	1550	730	42.0	12.3	3.15	.82	.97	1.00	40.5	11.9	3.49	.83	.99	1.00	39.0	11.4	3.87	.85	.99	1.00	37.6	11.0	4.30	.87	1.00	1.00
67°F (19°C)	1250	590	42.5	12.5	3.17	.62	.75	.87	41.0	12.0	3.50	.62	.76	.89	39.5	11.6	3.88	.63	.77	.91	37.8	11.1	4.31	.64	.78	.93
	1400	660	43.5	12.7	3.18	.63	.77	.91	42.0	12.3	3.52	.64	.78	.93	40.0	11.7	3.90	.65	.80	.95	38.5	11.3	4.32	.66	.82	.97
	1550	730	44.0	12.9	3.20	.65	.80	.95	42.5	12.5	3.53	.66	.81	.96	41.0	12.0	3.91	.67	.83	.98	39.0	11.4	4.34	.68	.85	.99
71°F (22°C)	1250	590	44.5	13.0	3.21	.47	.60	.72	43.0	12.6	3.55	.47	.61	.74	41.5	12.2	3.93	.48	.62	.75	40.0	11.7	4.35	.47	.63	.76
	1400	660	45.5	13.3	3.23	.48	.62	.75	44.0	12.9	3.57	.48	.63	.76	42.0	12.3	3.94	.48	.64	.78	40.5	11.9	4.38	.49	.65	.79
	1550	730	46.0	13.5	3.24	.49	.64	.78	44.5	13.0	3.58	.49	.64	.79	43.0	12.6	3.97	.50	.66	.81	41.0	12.0	4.40	.50	.67	.83
HS29-042 - CH23-41 COOLING CAPACITY - TXV Systems Only																										
63°F (17°C)	1250	590	39.0	11.4	3.09	.75	.88	.99	37.8	11.1	3.43	.76	.89	1.00	36.2	10.6	3.80	.77	.91	1.00	34.8	10.2	4.22	.78	.93	1.00
	1400	660	40.0	11.7	3.11	.77	.91	1.00	38.5	11.3	3.44	.78	.93	1.00	37.0	10.8	3.82	.80	.94	1.00	35.6	10.4	4.24	.81	.96	1.00
	1550	730	40.5	11.9	3.12	.79	.94	1.00	39.0	11.4	3.46	.80	.95	1.00	37.6	11.0	3.84	.82	.97	1.00	36.2	10.6	4.26	.84	.99	1.00
67°F (19°C)	1250	590	41.0	12.0	3.14	.61	.73	.85	40.0	11.7	3.48	.61	.74	.86	38.5	11.3	3.85	.62	.75	.88	36.8	10.8	4.28	.63	.76	.90
	1400	660	42.0	12.3	3.16	.62	.75	.88	40.5	11.9	3.49	.62	.76	.90	39.0	11.4	3.87	.63	.77	.91	37.6	11.0	4.30	.64	.79	.93
	1550	730	43.0	12.6	3.17	.63	.77	.91	41.5	12.2	3.51	.64	.78	.93	40.0	11.7	3.89	.65	.80	.95	38.0	11.1	4.32	.66	.82	.96
71°F (22°C)	1250	590	43.5	12.7	3.18	.47	.59	.70	42.0	12.3	3.52	.47	.60	.71	40.5	11.9	3.91	.48	.61	.73	39.0	11.4	4.33	.48	.61	.74
	1400	660	44.5	13.0	3.20	.47	.60	.73	43.0	12.6	3.54	.48	.61	.74	41.5	12.2	3.92	.48	.62	.75	39.5	11.6	4.36	.49	.63	.77
	1550	730	45.0	13.2	3.22	.48	.62	.75	43.5	12.7	3.56	.49	.63	.76	42.0	12.3	3.94	.49	.64	.78	40.5	11.9	4.38	.49	.65	.80
HS29-042 - CH23-51 COOLING CAPACITY - TXV Systems Only																										
63°F (17°C)	1250	590	39.5	11.6	3.10	.75	.88	.99	37.8	11.1	3.43	.76	.89	1.00	36.4	10.7	3.80	.77	.91	1.00	35.0	10.3	4.23	.78	.93	1.00
	1400	660	40.0	11.7	3.11	.77	.91	1.00	38.5	11.3	3.45	.78	.92	1.00	37.2	10.9	3.83	.79	.94	1.00	35.6	10.4	4.24	.81	.96	1.00
	1550	730	41.0	12.0	3.13	.79	.94	1.00	39.5	11.6	3.47	.80	.96	1.00	37.8	11.1	3.84	.82	.97	1.00	36.4	10.7	4.26	.83	.99	1.00
67°F (19°C)	1250	590	41.5	12.2	3.15	.60	.72	.84	40.0	11.7	3.48	.61	.73	.86	38.5	11.3	3.86	.61	.75	.88	37.2	10.9	4.28	.62	.76	.90
	1400	660	42.5	12.5	3.17	.61	.75	.88	41.0	12.0	3.50	.62	.76	.89	39.5	11.6	3.88	.63	.77	.91	37.8	11.1	4.30	.64	.79	.93
	1550	730	43.0	12.6	3.18	.63	.77	.91	41.5	12.2	3.52	.64	.78	.93	40.0	11.7	3.90	.64	.79	.95	38.5	11.3	4.32	.65	.81	.97
71°F (22°C)	1250	590	43.5	12.7	3.19	.47	.59	.70	42.0	12.3	3.53	.47	.59	.71	40.5	11.9	3.91	.46	.60	.72	39.0	11.4	4.33	.47	.61	.74
	1400	660	44.5	13.0	3.21	.47	.60	.72	43.0	12.6	3.55	.48	.61	.74	41.5	12.2	3.93	.48	.62	.75	40.0	11.7	4.36	.48	.63	.76
	1550	730	45.5	13.3	3.23	.48	.61	.75	44.0	12.9	3.56	.48	.62	.76	42.0	12.3	3.95	.49	.63	.77	40.5	11.9	4.38	.49	.64	.79
HS29-042 - CH33-42B-2F COOLING CAPACITY - TXV Systems Only																										
63°F (17°C)	1250	590	40.0	11.7	3.11	.75	.88	1.00	38.5	11.3	3.44	.76	.90	1.00	37.0	10.8	3.82	.78	.92	1.00	35.4	10.4	4.24	.79	.93	1.00
	1400	660	40.5	11.9	3.13	.78	.92	1.00	39.0	11.4	3.46	.79	.93	1.00	37.6	11.0	3.84	.80	.95	1.00	36.2	10.6	4.26	.82	.97	1.00
	1550	730	41.5	12.2	3.14	.80	.95	1.00	40.0	11.7	3.48	.81	.97	1.00	38.5	11.3	3.85	.82	.98	1.00	36.8	10.8	4.28	.84	1.00	1.00
67°F (19°C)	1250	590	42.0	12.3	3.15	.60	.73	.85	40.5	11.9	3.50	.61	.74	.87	39.0	11.4	3.87	.61	.75	.88	37.4	11.0	4.30	.62	.76	.90
	1400	660	43.0	12.6	3.17	.62	.75	.88	41.5	12.2	3.51	.62	.77	.90	39.5	11.6	3.89	.63	.77	.92	38.0	11.1	4.31	.64	.79	.94
	1550	730	43.5	12.7	3.19	.63	.77	.92	42.0	12.3	3.52	.64	.79	.94	40.5	11.9	3.90	.65	.81	.96	39.0	11.4	4.33	.66	.81	.98
71°F (22°C)	1250	590	44.0	12.9	3.20	.47	.59	.70	42.5	12.5	3.54	.47	.59	.72	41.0	12.0	3.92	.47	.60	.73	39.5	11.6	4.34	.48	.61	.74
	1400	660	45.0	13.2	3.22	.47	.60	.73	43.5	12.7	3.56	.48	.61	.74	42.0	12.3	3.94	.48	.62	.75	40.0	11.7	4.37	.49	.63	.77
	1550	730	45.5	13.3	3.23	.48	.62	.75	44.0	12.9	3.57	.49	.63	.76	42.5	12.5	3.95	.49	.64	.79	41.0	12.0	4.39	.50	.65	.81
HS29-042 - CH23-65 COOLING CAPACITY - TXV Systems Only																										
63°F (17°C)	1250	590	39.5	11.6	3.11	.75	.88	.99	38.0	11.1	3.44	.76	.90	1.00	36.8	10.8	3.81	.77	.91	1.00	35.4	10.4	4.24	.79	.93	1.00
	1400	660	40.5	11.9	3.12	.77	.92	1.00	39.0	11.4	3.46	.79	.93	1.00	37.6	11.0	3.84	.80	.95	1.00	36.0	10.6	4.25	.81	.97	1.00
	1550	730	41.0	12.0	3.14	.80	.95	1.00	39.5	11.6	3.48	.81	.96	1.00	38.5	11.3	3.85	.82	.98	1.00	36.8	10.8	4.28	.84	.99	1.00
67°F (19°C)	1250	590	42.0	12.3	3.15	.60	.73	.85	40.5	11.9	3.49	.61	.74	.87	39.0	11.4	3.86	.62	.75	.88	37.4	11.0	4.29	.63	.76	.90
	1400	660	43.0	12.6	3.17	.62	.75	.88	41.5	12.2	3.51	.62	.76	.90	40.0	11.7	3.89	.63	.78	.92	38.0	11.1	4.31	.64	.79	.94
	1550	730	43.5	12.7	3.19	.63	.77	.92	42.0	12.3	3.53	.64	.79	.94	40.5	11.9	3.90	.65	.80	.95	39.0	11.4	4.33	.66	.82	.97
71°F (22°C)	1250	590	44.0	12.9	3.20	.46	.59	.71	42.5	12.5	3.54	.46	.60	.72	41.0	12.0	3.92	.47	.60	.73	39.5	11.6	4.34	.47	.61	.74
	1400	660	45.0	13.2	3.22	.47	.60	.73	43.5	12.7	3.55	.47	.61	.74	42.0	12.3	3.94	.48	.62	.76	40.5	11.9	4.37	.48	.63	.77
	1550	730	46.0	13.5	3.23	.48	.62	.75	44.5	13.0	3.57	.48	.63	.77	42.5	12.5	3.96	.49	.64	.78	41.0	12.0	4.39	.49	.65	.80
HS29-042 - CH33-48C-2F COOLING CAPACITY - TXV Systems Only																										
63°F (17°C)	1250	590	40.5	11.9	3.13	.76	.89	1.00	39.0	11.4	3.46	.77	.90	1.00	37.8	11.1	3.84	.78	.92	1.00	36.2	10.6	4.26	.79	.94	1.00
	1400	660	41.5	12.2	3.14	.78	.92	1.00	40.0	11.7	3.48	.79	.94	1.00	38.5	11.3	3.86	.80	.96	1.00	37.0	10.8	4.28	.82	.98	1.00
	1550	730	42.5	12.5	3.16	.80	.95	1.00	41.0	12.0	3.50	.81	.97	1.00	39.5	11.6	3.88	.83	.99	1.00	37.6	11.0	4.30	.85	1.00	1.00
67°F (19°C)	1250	590	43.0	12.6	3.17	.61	.73	.86	41.5	12.2	3.51	.61	.75	.87	40.0	11.7	3.88	.62	.75	.89	38.0	11.1	4.32	.63	.77	.91
	1400	660	43.5	12.7	3.19	.62	.75	.89	42.0	12.3	3.53	.63	.77	.91	40.5	11.9	3.91	.64	.78	.92	39.0	11.4	4.34	.65	.80	.95
	1550	730	44.5	13.0	3.21	.63	.78	.92	43.0	12.6	3.54	.64	.79	.94	41.5	12.2	3.93	.65	.81	.96	39.5	11.6	4.35	.66	.82	.98
71°F (22°C)	1250	590	45.0	13.2	3.22	.47	.59	.71	43.5	12.7	3.56	.48	.60	.72	42.0	12.3	3.94	.48	.60	.73	40.0	11.7	4.37	.48	.61	.75
	1400	660	46.0	13.5	3.24	.48	.61	.74	44.5	13.0	3.58	.48	.62	.75	42.5	12.5	3.96	.48	.62	.76	41.0	12.0	4.39	.49	.63	.78
	1550	730	46.5	13.6	3.25	.48	.62	.76	45.0	13.2	3.60	.48	.63	.77	43.5	12.7	3.98	.49	.64	.78	41.5	12.2	4.41	.50	.65	.81
HS29-042 - CH33-60D-2F COOLING CAPACITY - TXV Systems Only																										
63°F (17°C)	1250	590	40.5	11.9	3.13	.76	.89	1.00	39.5	11.6	3.46	.77	.90	1.00	37.8	11.1	3.84	.78	.92	1.00	36.2	10.6	4.26	.80	.94	1.00
	1400	660	41.5	12.2	3.15	.78	.92	1.00	40.0	11.7	3.48	.79	.94	1.00	38.5	11.3	3.86	.81	.96	1.00	37.2	10.9	4.28	.82	.98	1.00
	1550	730	42.5	12.5	3.17	.80	.96	1.00	41.0	12.0	3.50	.82	.97	1.00	39.5	11.6	3.88	.83	.99	1.00	37.8	11.1	4.30	.85	1.00	1.00
67°F (19°C)	1250	590	43.0	12.6	3.18	.61	.74	.86	41.5	12.2	3.51	.61	.75	.87	40.0	11.7	3.89	.62	.76	.89	38.5	11.3	4.32	.63	.77	.91
	1400	660	44.0	12.9	3.19	.62	.76	.89	42.5	12.5	3.53	.63	.77	.91	40.5	11.9	3.91	.64	.79	.93	39.0	11.4	4.34	.65	.80	.95
	1550	730	44.5	13.0	3.21	.64	.78	.92	43.0	12.6	3.55	.65	.80	.94	41.5	12.2	3.93	.66	.81	.96	40.0	11.7	4.36	.67	.83	.98
71°F (22°C)	1250	590	45.0	13.2	3.22	.47	.59	.71	43.5	12.7	3.56	.47	.60	.72	42.0	12.3	3.94	.48	.61	.73	40.5	11.9	4.37	.48	.62	.75
	1400	660	46.0	13.5	3.24	.48	.61	.73	44.5	13.0	3.58	.48	.61	.75	43.0	12.6	3.97	.49	.63	.76	41.0	12.0	4.40	.49	.64	.78
	1550	730	47.0	13.8	3.26	.49	.62	.76	45.5	13.3	3.60	.49	.64	.78	43.5	12.7	3.98	.49	.64	.79	42.0	12.3	4.42	.50	.66	.81

NOTE - For Temperatures and Capacities not shown in tables, see bulletin - Cooling Unit Rating Table Correction Factor Data in Miscellaneous Engineering Data section.

Entering Wet Bulb Temperature	Total Air Volume		Outdoor Air Temperature Entering Outdoor Coil																							
			85°F (29°C)						95°F (35°C)						105°F (41°C)						115°F (46°C)					
			Total Cooling Capacity		Comp Motor kW Input	Sensible To Total Ratio (S/T) Dry Bulb			Total Cooling Capacity		Comp Motor kW Input	Sensible To Total Ratio (S/T) Dry Bulb			Total Cooling Capacity		Comp Motor kW Input	Sensible To Total Ratio (S/T) Dry Bulb			Total Cooling Capacity		Comp Motor kW Input	Sensible To Total Ratio (S/T) Dry Bulb		
	cfm	L/s	kBtuh	kW		75°F 24°C	80°F 27°C	85°F 29°C	kBtuh	kW		75°F 24°C	80°F 27°C	85°F 29°C	kBtuh	kW		75°F 24°C	80°F 27°C	85°F 29°C	kBtuh	kW		75°F 24°C	80°F 27°C	85°F 29°C
HS29-042 - CH33-48C-2F with G60UHV-60C COOLING CAPACITY - TXV Systems Only																										
63°F (17°C)	1335	630	41.0	12.0	3.13	.77	.90	1.00	39.5	11.6	3.47	.77	.92	1.00	38.0	11.1	3.85	.79	.93	1.00	36.6	10.7	4.27	.80	.96	1.00
	1485	700	42.0	12.3	3.15	.79	.93	1.00	40.5	11.9	3.49	.80	.95	1.00	39.0	11.4	3.87	.81	.97	1.00	37.2	10.9	4.29	.83	.99	1.00
	1630	770	42.5	12.5	3.17	.81	.96	1.00	41.0	12.0	3.51	.82	.98	1.00	39.5	11.6	3.88	.84	1.00	1.00	37.8	11.1	4.30	.85	1.00	1.00
67°F (19°C)	1335	630	43.5	12.7	3.18	.61	.74	.87	41.5	12.2	3.52	.61	.75	.89	40.0	11.7	3.90	.62	.77	.90	38.5	11.3	4.33	.63	.78	.92
	1485	700	44.0	12.9	3.20	.63	.76	.90	42.5	12.5	3.54	.63	.78	.92	41.0	12.0	3.92	.64	.79	.94	39.0	11.4	4.34	.65	.80	.96
	1630	770	44.5	13.0	3.21	.64	.79	.93	43.0	12.6	3.55	.65	.80	.95	41.5	12.2	3.93	.66	.82	.97	40.0	11.7	4.36	.67	.83	.99
71°F (22°C)	1335	630	45.5	13.3	3.23	.47	.59	.72	44.0	12.9	3.56	.47	.60	.74	42.0	12.3	3.95	.47	.61	.74	40.5	11.9	4.38	.48	.62	.76
	1485	700	46.5	13.6	3.25	.47	.61	.74	44.5	13.0	3.58	.48	.61	.76	43.0	12.6	3.97	.48	.63	.77	41.5	12.2	4.40	.49	.64	.78
	1630	770	47.0	13.8	3.26	.48	.63	.77	45.5	13.3	3.60	.48	.63	.78	43.5	12.7	3.98	.49	.64	.80	42.0	12.3	4.42	.49	.66	.81
HS29-042 - CH33-48C-2F with G61MPV-60C COOLING CAPACITY - TXV Systems Only																										
63°F (17°C)	1275	600	40.5	11.9	3.13	.76	.89	1.00	39.0	11.4	3.46	.77	.90	1.00	37.8	11.1	3.84	.78	.92	1.00	36.2	10.6	4.26	.79	.94	1.00
	1455	685	41.5	12.2	3.15	.78	.93	1.00	40.0	11.7	3.48	.79	.94	1.00	38.5	11.3	3.86	.81	.96	1.00	37.2	10.9	4.29	.82	.98	1.00
	1585	750	42.5	12.5	3.16	.81	.96	1.00	41.0	12.0	3.50	.82	.97	1.00	39.5	11.6	3.88	.83	.99	1.00	37.8	11.1	4.30	.85	1.00	1.00
67°F (19°C)	1275	600	43.0	12.6	3.17	.60	.73	.86	41.5	12.2	3.51	.61	.74	.87	40.0	11.7	3.89	.61	.75	.89	38.0	11.1	4.32	.63	.77	.91
	1455	685	44.0	12.9	3.19	.62	.76	.90	42.5	12.5	3.53	.63	.77	.91	41.0	12.0	3.91	.64	.79	.93	39.0	11.4	4.34	.65	.80	.95
	1585	750	44.5	13.0	3.21	.64	.78	.93	43.0	12.6	3.55	.64	.80	.94	41.5	12.2	3.93	.65	.81	.96	39.5	11.6	4.36	.66	.83	.98
71°F (22°C)	1275	600	45.0	13.2	3.22	.47	.59	.71	43.5	12.7	3.56	.47	.59	.72	42.0	12.3	3.94	.48	.60	.73	40.0	11.7	4.37	.48	.61	.75
	1455	685	46.0	13.5	3.24	.47	.61	.74	44.5	13.0	3.58	.48	.62	.75	43.0	12.6	3.97	.48	.63	.76	41.0	12.0	4.40	.49	.64	.78
	1585	750	47.0	13.8	3.25	.48	.62	.76	45.0	13.2	3.60	.49	.63	.78	43.5	12.7	3.98	.49	.64	.79	42.0	12.3	4.41	.49	.65	.80
HS29-042 - CH33-50/60C-2F with G60UHV-60C COOLING CAPACITY - TXV Systems Only																										
63°F (17°C)	1335	630	41.5	12.2	3.14	.77	.91	1.00	40.0	11.7	3.48	.78	.92	1.00	38.5	11.3	3.86	.80	.94	1.00	36.8	10.8	4.28	.81	.97	1.00
	1485	700	42.5	12.5	3.16	.79	.94	1.00	41.0	12.0	3.50	.81	.96	1.00	39.0	11.4	3.88	.82	.98	1.00	37.6	11.0	4.30	.84	1.00	1.00
	1630	770	43.0	12.6	3.18	.82	.97	1.00	41.5	12.2	3.51	.83	.99	1.00	40.0	11.7	3.89	.85	1.00	1.00	38.5	11.3	4.32	.87	1.00	1.00
67°F (19°C)	1335	630	43.5	12.7	3.19	.61	.74	.88	42.0	12.3	3.53	.62	.76	.90	40.5	11.9	3.91	.63	.77	.91	39.0	11.4	4.33	.64	.79	.93
	1485	700	44.5	13.0	3.21	.63	.77	.91	43.0	12.6	3.55	.64	.78	.93	41.5	12.2	3.93	.64	.80	.95	39.5	11.6	4.36	.66	.82	.97
	1630	770	45.5	13.3	3.22	.64	.79	.95	43.5	12.7	3.56	.65	.81	.96	42.0	12.3	3.94	.66	.83	.98	40.0	11.7	4.37	.67	.84	1.00
71°F (22°C)	1335	630	46.0	13.5	3.24	.47	.60	.73	44.5	13.0	3.57	.47	.61	.74	42.5	12.5	3.96	.48	.61	.75	41.0	12.0	4.39	.48	.62	.77
	1485	700	47.0	13.8	3.25	.47	.61	.75	45.0	13.2	3.60	.48	.62	.76	43.5	12.7	3.98	.48	.63	.78	41.5	12.2	4.41	.49	.64	.79
	1630	770	47.5	13.9	3.27	.48	.63	.77	46.0	13.5	3.61	.49	.64	.79	44.0	12.9	4.00	.49	.65	.80	42.5	12.5	4.42	.50	.66	.83
HS29-042 - CH33-50/60C-2F with G61MPV-60C COOLING CAPACITY - TXV Systems Only																										
63°F (17°C)	1275	600	41.0	12.0	3.13	.76	.89	1.00	39.5	11.6	3.47	.77	.91	1.00	38.0	11.1	3.85	.78	.93	1.00	36.6	10.7	4.27	.80	.95	1.00
	1455	685	42.0	12.3	3.16	.79	.94	1.00	40.5	11.9	3.50	.80	.95	1.00	39.0	11.4	3.87	.82	.97	1.00	37.6	11.0	4.30	.83	.99	1.00
	1585	750	43.0	12.6	3.17	.81	.97	1.00	41.5	12.2	3.51	.82	.98	1.00	39.5	11.6	3.89	.84	1.00	1.00	38.0	11.1	4.31	.86	1.00	1.00
67°F (19°C)	1275	600	43.5	12.7	3.18	.60	.74	.86	42.0	12.3	3.52	.61	.75	.88	40.5	11.9	3.90	.62	.76	.90	38.5	11.3	4.33	.63	.77	.92
	1455	685	44.5	13.0	3.21	.63	.77	.91	43.0	12.6	3.54	.64	.78	.92	41.0	12.0	3.93	.64	.80	.94	39.5	11.6	4.35	.65	.81	.97
	1585	750	45.0	13.2	3.22	.64	.79	.94	43.5	12.7	3.56	.65	.80	.96	42.0	12.3	3.94	.66	.82	.98	40.0	11.7	4.36	.67	.84	1.00
71°F (22°C)	1275	600	45.5	13.3	3.23	.47	.59	.72	44.0	12.9	3.57	.47	.60	.72	42.5	12.5	3.95	.47	.61	.74	40.5	11.9	4.38	.48	.62	.75
	1455	685	46.5	13.6	3.25	.48	.61	.75	45.0	13.2	3.60	.48	.62	.76	43.5	12.7	3.98	.49	.63	.77	41.5	12.2	4.41	.49	.64	.79
	1585	750	47.5	13.9	3.27	.48	.63	.77	45.5	13.3	3.61	.49	.64	.78	44.0	12.9	3.99	.49	.65	.80	42.0	12.3	4.43	.50	.66	.82
HS29-042 - CB29M-41 - CB28UH-036 COOLING CAPACITY - TXV Systems Only																										
63°F (17°C)	1200	565	36.8	10.8	3.05	.76	.88	.99	35.6	10.4	3.38	.77	.90	1.00	34.4	10.1	3.76	.78	.91	1.00	33.2	9.7	4.18	.79	.93	1.00
	1350	635	37.8	11.1	3.07	.78	.91	1.00	36.6	10.7	3.41	.79	.93	1.00	35.4	10.4	3.78	.80	.94	1.00	34.0	10.0	4.20	.82	.96	1.00
	1500	710	38.5	11.3	3.09	.80	.94	1.00	37.4	11.0	3.42	.82	.95	1.00	36.2	10.6	3.80	.83	.97	1.00	34.8	10.2	4.22	.85	.98	1.00
67°F (19°C)	1200	565	38.5	11.3	3.08	.61	.74	.86	37.2	10.9	3.42	.62	.75	.87	36.0	10.6	3.79	.63	.76	.88	34.6	10.1	4.21	.63	.77	.90
	1350	635	39.5	11.6	3.10	.63	.76	.89	38.0	11.1	3.44	.63	.77	.90	36.8	10.8	3.82	.64	.78	.91	35.4	10.4	4.24	.65	.80	.93
	1500	710	40.5	11.9	3.12	.64	.78	.91	39.0	11.4	3.46	.65	.80	.93	37.6	11.0	3.83	.66	.81	.94	36.0	10.6	4.26	.67	.83	.96
71°F (22°C)	1200	565	40.5	11.9	3.12	.48	.60	.71	39.0	11.4	3.46	.48	.60	.73	37.8	11.1	3.84	.48	.61	.74	36.4	10.7	4.26	.49	.62	.75
	1350	635	41.5	12.2	3.14	.48	.61	.74	40.0	11.7	3.48	.49	.62	.75	38.5	11.3	3.86	.49	.63	.76	37.2	10.9	4.29	.50	.64	.78
	1500	710	42.0	12.3	3.16	.49	.63	.76	41.0	12.0	3.50	.50	.64	.78	39.5	11.6	3.88	.50	.65	.79	37.8	11.1	4.30	.51	.66	.81
HS29-042 - CB30M-41 COOLING CAPACITY - TXV Systems Only																										
63°F (17°C)	1050	495	37.4	11.0	3.06	.74	.87	.98	36.2	10.6	3.39	.75	.88	.99	34.8	10.2	3.77	.76	.90	1.00	33.2	9.7	4.18	.77	.91	1.00
	1250	590	38.5	11.3	3.09	.78	.92	1.00	37.4	11.0	3.42	.79	.93	1.00	35.8	10.5	3.79	.80	.95	1.00	34.4	10.1	4.21	.82	.97	1.00
	1450	685	39.5	11.6	3.11	.81	.96	1.00	38.5	11.3	3.44	.83	.98	1.00	36.8	10.8	3.82	.84	.99	1.00	35.4	10.4	4.24	.86	1.00	1.00
67°F (19°C)	1050	495	39.5	11.6	3.10	.59	.71	.83	38.0	11.1	3.43	.60	.72	.85	36.6	10.7	3.81	.60	.74	.86	35.2	10.3	4.23	.61	.75	.88
	1250	590	41.0	12.0	3.13	.62	.75	.89	39.5	11.6	3.46	.62	.76	.90	37.8	11.1	3.84	.63	.78	.92	36.2	10.6	4.26	.64	.79	.94
	1450	685	42.0	12.3	3.15	.64	.79	.93	40.5	11.9	3.49	.65	.80	.95	39.0	11.4	3.87	.66	.82	.97	37.2	10.9	4.29	.67	.84	.98
71°F (22°C)	1050	495	41.5	12.2	3.14	.46	.58	.69	40.0	11.7	3.48	.46	.58	.70	38.5	11.3	3.86	.46	.59	.71	37.0	10.8	4.28	.47	.60	.73
	1250	590	43.0	12.6	3.17	.47	.60	.73	41.5	12.2	3.51	.47	.61	.74	39.5	11.6	3.89	.48	.62	.76	38.0	11.1	4.31	.48	.63	.77
	1450	685	44.0	12.9	3.20	.48	.63	.77	42.5	12.5	3.53	.49	.64	.78	41.0	12.0	3.91	.49	.65	.80	39.0	11.4	4.34	.50	.66	.82
HS29-042 - CB29M-46 - CB28UH-042 COOLING CAPACITY - TXV Systems Only																										
63°F (17°C)	1200	565	38.5	11.3	3.08	.77	.90	1.00	37.0	10.8	3.41	.78	.92	1.00	35.6	10.4	3.79	.79	.94	1.00	34.0	10.0	4.20	.81	.95	1.00
	1350	635	39.0	11.4	3.10	.79	.94	1.00	37.8	11.1	3.43	.81	.95	1.00	36.2	10.6	3.80	.82	.97	1.00	34.8	10.2	4.22	.84	.99	1.00
	1500	710	40.0	11.7	3.11	.82	.97	1.00	38.5	11.3	3.45	.84	.98	1.00	37.0	10.8	3.82	.85	1.00	1.00	35.6	10.4	4.24	.87	1.00	1.00
67°F (19°C)	1200	565	40.5	11.9	3.12	.61	.74	.87	39.0	11.4	3.46	.62	.76	.89	37.4	11.0	3.83	.63	.77	.91	36.0	10.6	4.25	.63	.78	.92
	1350	635	41.0	12.0	3.14	.63	.77	.91	40.0	11.7	3.48	.64	.78	.93	38.5	11.3	3.85	.65	.80	.94	36.6	10.7	4.28	.66	.82	.96
	1500	710	42.0	12.3	3.15	.65	.80	.94	40.5	11.9	3.49	.66	.81	.96	39.0	11.4	3.87	.67	.83	.98	37.4	11.0	4.29	.68	.85	.99
71°F (22°C)	1200	565	42.5	12.5	3.16	.47	.60	.72	41.0	12.0	3.50	.48	.61	.73	39.5	11.6	3.88	.48	.61	.74	37.8	11.1	4.30	.48	.62	.76
	1350	635	43.5	12.7	3.18	.48	.62	.75	42.0	12.3	3.52	.48	.63	.76	40.0	11.7	3.90	.49	.63	.78	38.5	11.3	4.32	.49	.65	.79
	1500	710	44.0	12.9	3.20	.49	.64	.78	42.5	12.5	3.54	.50	.65	.79	41.0	12.0	3.92	.50	.66	.81	39.0	11.4	4.34	.51	.67	.83

NOTE - For Temperatures and Capacities not shown in tables, see bulletin - Cooling Unit Rating Table Correction Factor Data in Miscellaneous Engineering Data section.

Entering Wet Bulb Temperature	Total Air Volume		Outdoor Air Temperature Entering Outdoor Coil: 85°F (29°C)						95°F (35°C)						105°F (41°C)						115°F (46°C)					
			Total Cooling Capacity		Comp Motor kW Input	Sensible To Total Ratio (S/T) Dry Bulb			Total Cooling Capacity		Comp Motor kW Input	Sensible To Total Ratio (S/T) Dry Bulb			Total Cooling Capacity		Comp Motor kW Input	Sensible To Total Ratio (S/T) Dry Bulb			Total Cooling Capacity		Comp Motor kW Input	Sensible To Total Ratio (S/T) Dry Bulb		
	cfm	L/s	kBtuh	kW		75°F 24°C	80°F 27°C	85°F 29°C	kBtuh	kW		75°F 24°C	80°F 27°C	85°F 29°C	kBtuh	kW		75°F 24°C	80°F 27°C	85°F 29°C	kBtuh	kW		75°F 24°C	80°F 27°C	85°F 29°C
HS29-042 - CB30M-46 - CB30U-41/46 COOLING CAPACITY - TXV Systems Only																										
63°F (17°C)	1250	590	38.5	11.3	3.09	.77	.92	1.00	37.4	11.0	3.42	.78	.93	1.00	35.8	10.5	3.79	.80	.95	1.00	34.4	10.1	4.21	.82	.97	1.00
	1400	660	39.5	11.6	3.10	.80	.95	1.00	38.0	11.1	3.44	.82	.96	1.00	36.6	10.7	3.81	.83	.98	1.00	35.0	10.3	4.23	.85	1.00	1.00
	1550	730	40.0	11.7	3.12	.83	.98	1.00	39.0	11.4	3.45	.84	.99	1.00	37.4	11.0	3.83	.86	1.00	1.00	36.0	10.6	4.25	.88	1.00	1.00
67°F (19°C)	1250	590	41.0	12.0	3.13	.62	.75	.89	39.5	11.6	3.46	.62	.76	.90	37.8	11.1	3.84	.63	.78	.92	36.2	10.6	4.26	.64	.79	.94
	1400	660	41.5	12.2	3.15	.63	.78	.92	40.0	11.7	3.48	.64	.80	.94	38.5	11.3	3.86	.65	.81	.95	37.0	10.8	4.28	.66	.83	.97
	1550	730	42.5	12.5	3.16	.65	.81	.95	41.0	12.0	3.50	.66	.82	.97	39.0	11.4	3.88	.67	.84	.99	37.6	11.0	4.29	.68	.86	1.00
71°F (22°C)	1250	590	42.5	12.5	3.17	.47	.60	.73	41.5	12.2	3.51	.47	.61	.74	39.5	11.6	3.89	.48	.62	.76	38.0	11.1	4.31	.48	.63	.77
	1400	660	43.5	12.7	3.19	.48	.62	.76	42.0	12.3	3.53	.48	.63	.77	40.5	11.9	3.91	.49	.64	.79	39.0	11.4	4.34	.49	.65	.81
	1550	730	44.5	13.0	3.20	.49	.64	.79	43.0	12.6	3.54	.49	.65	.80	41.0	12.0	3.92	.50	.66	.82	39.5	11.6	4.35	.50	.67	.84
HS29-042 - CB31MV-41 COOLING CAPACITY - TXV Systems Only																										
63°F (17°C)	1265	595	39.0	11.4	3.09	.78	.92	1.00	37.4	11.0	3.42	.79	.93	1.00	36.0	10.6	3.79	.80	.95	1.00	34.4	10.1	4.21	.82	.97	1.00
	1400	660	39.5	11.6	3.10	.80	.95	1.00	38.0	11.1	3.44	.82	.97	1.00	36.6	10.7	3.81	.83	.98	1.00	35.2	10.3	4.23	.85	1.00	1.00
	1545	730	40.0	11.7	3.12	.83	.98	1.00	39.0	11.4	3.45	.85	.99	1.00	37.4	11.0	3.83	.86	1.00	1.00	36.0	10.6	4.25	.88	1.00	1.00
67°F (19°C)	1265	595	41.0	12.0	3.13	.62	.76	.89	39.5	11.6	3.46	.62	.77	.91	38.0	11.1	3.84	.63	.78	.92	36.4	10.7	4.27	.64	.80	.94
	1400	660	41.5	12.2	3.15	.63	.78	.92	40.0	11.7	3.48	.64	.80	.94	38.5	11.3	3.86	.65	.81	.96	37.0	10.8	4.28	.66	.83	.98
	1545	730	42.5	12.5	3.16	.65	.81	.95	41.0	12.0	3.50	.66	.83	.97	39.0	11.4	3.88	.67	.84	.99	37.6	11.0	4.30	.69	.86	1.00
71°F (22°C)	1265	595	43.0	12.6	3.17	.47	.60	.73	41.5	12.2	3.51	.47	.61	.74	40.0	11.7	3.89	.48	.62	.76	38.0	11.1	4.32	.48	.63	.77
	1400	660	43.5	12.7	3.19	.48	.62	.76	42.0	12.3	3.53	.49	.63	.78	40.5	11.9	3.91	.49	.64	.79	39.0	11.4	4.33	.50	.65	.81
	1545	730	44.5	13.0	3.20	.49	.64	.79	43.0	12.6	3.54	.50	.65	.80	41.0	12.0	3.92	.50	.66	.82	39.5	11.6	4.34	.51	.68	.84
HS29-042 - CB29M-51 - CB28UH-048 COOLING CAPACITY - TXV Systems Only																										
63°F (17°C)	1200	565	39.5	11.6	3.11	.76	.89	1.00	38.5	11.3	3.44	.77	.91	1.00	36.8	10.8	3.81	.78	.92	1.00	35.4	10.4	4.24	.80	.94	1.00
	1350	635	40.5	11.9	3.12	.78	.93	1.00	39.0	11.4	3.46	.80	.94	1.00	37.8	11.1	3.83	.81	.96	1.00	36.2	10.6	4.26	.83	.98	1.00
	1500	710	41.5	12.2	3.14	.81	.96	1.00	40.0	11.7	3.48	.82	.97	1.00	38.5	11.3	3.86	.84	.99	1.00	37.0	10.8	4.28	.86	1.00	1.00
67°F (19°C)	1200	565	42.0	12.3	3.15	.61	.74	.86	40.5	11.9	3.49	.62	.75	.88	39.0	11.4	3.86	.62	.76	.89	37.4	11.0	4.29	.63	.77	.91
	1350	635	43.0	12.6	3.17	.63	.76	.90	41.5	12.2	3.50	.63	.77	.91	39.5	11.6	3.88	.64	.79	.93	38.0	11.1	4.31	.65	.80	.95
	1500	710	43.5	12.7	3.18	.64	.79	.93	42.0	12.3	3.52	.65	.80	.95	40.5	11.9	3.90	.66	.82	.96	39.0	11.4	4.33	.67	.83	.98
71°F (22°C)	1200	565	44.0	12.9	3.19	.47	.59	.71	42.5	12.5	3.53	.47	.60	.72	41.0	12.0	3.91	.48	.61	.74	39.0	11.4	4.34	.48	.62	.75
	1350	635	45.0	13.2	3.21	.48	.61	.74	43.5	12.7	3.55	.48	.62	.75	41.5	12.2	3.93	.49	.63	.77	40.0	11.7	4.37	.49	.64	.78
	1500	710	45.5	13.3	3.23	.49	.63	.77	44.0	12.9	3.57	.49	.64	.78	42.5	12.5	3.95	.50	.65	.80	40.5	11.9	4.39	.50	.66	.81
HS29-042 - CB30M-51 - CB30U-51 COOLING CAPACITY - TXV Systems Only																										
63°F (17°C)	1200	565	40.0	11.7	3.12	.76	.90	1.00	39.0	11.4	3.45	.77	.91	1.00	37.4	11.0	3.83	.78	.93	1.00	35.8	10.5	4.25	.80	.95	1.00
	1400	660	41.5	12.2	3.14	.80	.95	1.00	40.0	11.7	3.48	.81	.97	1.00	38.5	11.3	3.86	.82	.98	1.00	37.0	10.8	4.28	.84	1.00	1.00
	1600	755	42.5	12.5	3.17	.83	.99	1.00	41.0	12.0	3.50	.85	1.00	1.00	39.5	11.6	3.89	.87	1.00	1.00	38.0	11.1	4.31	.89	1.00	1.00
67°F (19°C)	1200	565	42.5	12.5	3.17	.61	.74	.87	41.0	12.0	3.50	.61	.75	.88	39.5	11.6	3.88	.62	.76	.90	37.8	11.1	4.30	.63	.78	.92
	1400	660	43.5	12.7	3.19	.63	.77	.92	42.0	12.3	3.53	.64	.79	.94	40.5	11.9	3.91	.65	.80	.96	39.0	11.4	4.33	.66	.82	.98
	1600	755	44.5	13.0	3.21	.65	.81	.97	43.0	12.6	3.55	.66	.83	.98	41.5	12.2	3.93	.67	.85	.99	39.5	11.6	4.36	.68	.86	1.00
71°F (22°C)	1200	565	44.5	13.0	3.21	.46	.59	.72	43.0	12.6	3.55	.47	.60	.73	41.5	12.2	3.93	.47	.61	.74	40.0	11.7	4.36	.47	.62	.75
	1400	660	46.0	13.5	3.23	.47	.62	.75	44.5	13.0	3.58	.48	.63	.77	42.5	12.5	3.96	.48	.63	.78	41.0	12.0	4.39	.49	.65	.80
	1600	755	47.0	13.8	3.26	.49	.64	.79	45.5	13.3	3.60	.49	.65	.81	43.5	12.7	3.98	.50	.66	.82	41.5	12.2	4.41	.50	.67	.84
HS29-042 - CB31MV-51 COOLING CAPACITY - TXV Systems Only																										
63°F (17°C)	1205	570	40.5	11.9	3.12	.77	.91	1.00	39.0	11.4	3.46	.78	.92	1.00	37.6	11.0	3.83	.79	.94	1.00	36.0	10.6	4.26	.81	.96	1.00
	1425	675	41.5	12.2	3.14	.80	.95	1.00	40.0	11.7	3.48	.81	.97	1.00	38.5	11.3	3.86	.83	.98	1.00	37.2	10.9	4.28	.85	1.00	1.00
	1625	765	43.0	12.6	3.18	.85	1.00	1.00	41.5	12.2	3.52	.87	1.00	1.00	40.5	11.9	3.90	.89	1.00	1.00	39.0	11.4	4.33	.91	1.00	1.00
67°F (19°C)	1205	570	42.5	12.5	3.17	.61	.74	.87	41.0	12.0	3.50	.62	.76	.89	39.5	11.6	3.88	.63	.77	.91	38.0	11.1	4.31	.64	.79	.93
	1425	675	44.0	12.9	3.19	.63	.78	.92	42.0	12.3	3.53	.64	.79	.94	40.5	11.9	3.91	.65	.81	.96	39.0	11.4	4.33	.66	.82	.98
	1625	765	45.0	13.2	3.22	.67	.83	.98	43.5	12.7	3.56	.68	.85	.99	42.0	12.3	3.94	.69	.87	1.00	40.0	11.7	4.36	.71	.89	1.00
71°F (22°C)	1205	570	45.0	13.2	3.21	.47	.60	.72	43.0	12.6	3.55	.48	.61	.73	41.5	12.2	3.93	.48	.62	.75	40.0	11.7	4.36	.49	.63	.76
	1425	675	46.0	13.5	3.24	.47	.62	.76	44.5	13.0	3.58	.48	.63	.77	42.5	12.5	3.96	.48	.64	.79	41.0	12.0	4.39	.49	.65	.80
	1625	765	47.5	13.9	3.27	.51	.66	.81	46.0	13.5	3.61	.51	.67	.83	44.0	12.9	3.99	.52	.68	.85	42.0	12.3	4.42	.52	.70	.87
HS29-042 - CVP10-46/EC10Q4 COOLING CAPACITY - TXV Systems Only																										
63°F (17°C)	1200	565	38.5	11.3	3.08	.76	.89	1.00	37.0	10.8	3.41	.77	.91	1.00	35.8	10.5	3.79	.78	.93	1.00	34.2	10.0	4.21	.80	.94	1.00
	1400	660	39.5	11.6	3.10	.79	.94	1.00	38.0	11.1	3.44	.81	.96	1.00	36.6	10.7	3.81	.82	.97	1.00	35.2	10.3	4.23	.84	.99	1.00
	1600	755	40.5	11.9	3.12	.83	.98	1.00	39.0	11.4	3.46	.84	.99	1.00	37.6	11.0	3.84	.86	1.00	1.00	36.4	10.7	4.26	.88	1.00	1.00
67°F (19°C)	1200	565	40.5	11.9	3.12	.61	.74	.86	39.0	11.4	3.46	.62	.75	.88	37.8	11.1	3.84	.62	.76	.89	36.4	10.7	4.26	.63	.77	.91
	1400	660	42.0	12.3	3.15	.63	.77	.91	40.5	11.9	3.49	.64	.78	.93	39.0	11.4	3.87	.65	.80	.95	37.2	10.9	4.29	.66	.82	.96
	1600	755	42.5	12.5	3.17	.65	.81	.95	41.0	12.0	3.50	.66	.82	.97	39.5	11.6	3.88	.67	.84	.98	38.0	11.1	4.31	.68	.86	1.00
71°F (22°C)	1200	565	43.0	12.6	3.17	.47	.59	.71	41.5	12.2	3.51	.47	.60	.73	40.0	11.7	3.89	.47	.61	.74	38.5	11.3	4.32	.48	.62	.75
	1400	660	44.0	12.9	3.20	.48	.62	.75	42.5	12.5	3.54	.48	.63	.76	41.0	12.0	3.92	.49	.64	.78	39.5	11.6	4.34	.49	.65	.79
	1600	755	45.0	13.2	3.22	.49	.64	.79	43.5	12.7	3.56	.49	.65	.80	42.0	12.3	3.94	.50	.66	.82	40.0	11.7	4.37	.50	.67	.84
HS29-042 - CVP10-51/EC10Q4 COOLING CAPACITY - TXV Systems Only																										
63°F (17°C)	1200	565	38.5	11.3	3.09	.75	.89	.99	37.4	11.0	3.42	.76	.90	1.00	36.0	10.6	3.79	.78	.92	1.00	34.6	10.1	4.21	.79	.94	1.00
	1400	660	40.0	11.7	3.11	.79	.93	1.00	38.5	11.3	3.44	.80	.95	1.00	37.0	10.8	3.82	.81	.97	1.00	35.6	10.4	4.24	.83	.98	1.00
	1600	755	41.0	12.0	3.13	.82	.98	1.00	39.5	11.6	3.47	.84	.99	1.00	38.0	11.1	3.85	.85	.99	1.00	36.8	10.8	4.28	.87	1.00	1.00
67°F (19°C)	1200	565	41.0	12.0	3.13	.60	.73	.86	39.5	11.6	3.47	.61	.74	.87	38.0	11.1	3.85	.62	.75	.89	36.6	10.7	4.27	.63	.77	.91
	1400	660	42.0	12.3	3.16	.63	.77	.91	41.0	12.0	3.50	.63	.78	.92	39.0	11.4	3.87	.64	.79	.94	37.6	11.0	4.30	.65	.81	.96
	1600	755	43.0	12.6	3.18	.65	.80	.95	41.5	12.2	3.51	.65	.82	.97	40.0	11.7	3.89	.66	.83	.98	38.5	11.3	4.32	.68	.85	.99
71°F (22°C)	1200	565	43.5	12.7	3.18	.46	.59	.71	42.0	12.3	3.52	.47	.60	.72	40.5	11.9	3.91	.47	.60	.73	39.0	11.4	4.33	.48	.61	.75
	1400	660	44.5	13.0	3.21	.47	.61	.74	43.0	12.6	3.55	.48	.62	.76	41.5	12.2	3.93	.49	.63	.77	40.0	11.7	4.36	.49	.64	.79
	1600	755	45.5	13.3	3.23	.49	.64	.78	44.0	12.9	3.57	.49	.64	.79	42.5	12.5	3.95	.50	.65	.81	40.5	11.9	4.37	.50	.67	.83

NOTE - For Temperatures and Capacities not shown in tables, see bulletin - Cooling Unit Rating Table Correction Factor Data in Miscellaneous Engineering Data section.

Entering Wet Bulb Temperature	Total Air Volume		Outdoor Air Temperature Entering Outdoor Coil																							
			85°F (29°C)						95°F (35°C)						105°F (41°C)						115°F (46°C)					
			Total Cooling Capacity		Comp Motor kW Input	Sensible To Total Ratio (S/T) Dry Bulb			Total Cooling Capacity		Comp Motor kW Input	Sensible To Total Ratio (S/T) Dry Bulb			Total Cooling Capacity		Comp Motor kW Input	Sensible To Total Ratio (S/T) Dry Bulb			Total Cooling Capacity		Comp Motor kW Input	Sensible To Total Ratio (S/T) Dry Bulb		
	cfm	L/s	kBtuh	kW		75°F 24°C	80°F 27°C	85°F 29°C	kBtuh	kW		75°F 24°C	80°F 27°C	85°F 29°C	kBtuh	kW		75°F 24°C	80°F 27°C	85°F 29°C	kBtuh	kW		75°F 24°C	80°F 27°C	85°F 29°C
HS29-042 - C33-42B COOLING CAPACITY - RFC Systems Only																										
63°F (17°C)	1250	590	40.1	11.8	3.23	.73	.87	.98	38.8	11.4	3.60	.74	.88	.99	37.4	11.0	4.03	.75	.90	1.00	35.8	10.5	4.51	.77	.92	1.00
	1400	660	40.8	12.0	3.24	.75	.90	1.00	39.5	11.6	3.62	.77	.91	1.00	38.0	11.1	4.04	.78	.93	1.00	36.5	10.7	4.53	.80	.95	1.00
	1550	730	41.4	12.1	3.26	.78	.93	1.00	40.1	11.8	3.63	.79	.94	1.00	38.6	11.3	4.06	.81	.96	1.00	37.1	10.9	4.55	.82	.97	1.00
67°F (19°C)	1250	590	42.6	12.5	3.28	.57	.70	.84	41.2	12.1	3.65	.58	.71	.85	39.6	11.6	4.08	.58	.73	.87	38.0	11.1	4.57	.59	.74	.89
	1400	660	43.2	12.7	3.29	.59	.73	.87	41.7	12.2	3.66	.59	.74	.89	40.1	11.8	4.09	.60	.76	.90	38.5	11.3	4.57	.61	.77	.92
	1550	730	43.7	12.8	3.30	.60	.76	.90	42.2	12.4	3.67	.61	.77	.92	40.6	11.9	4.10	.62	.78	.93	38.9	11.4	4.59	.62	.80	.95
71°F (22°C)	1250	590	45.3	13.3	3.33	.43	.55	.68	43.8	12.8	3.71	.43	.56	.69	42.1	12.3	4.14	.43	.57	.71	40.4	11.8	4.63	.43	.58	.72
	1400	660	45.9	13.5	3.34	.43	.57	.71	44.3	13.0	3.72	.44	.58	.72	42.7	12.5	4.15	.44	.59	.73	40.9	12.0	4.64	.44	.60	.75
	1550	730	46.4	13.6	3.35	.44	.59	.73	44.8	13.1	3.73	.44	.59	.75	43.1	12.6	4.16	.44	.60	.76	41.3	12.1	4.66	.45	.62	.78
HS29-042 - C33-48B/C COOLING CAPACITY - RFC Systems Only																										
63°F (17°C)	1250	590	42.0	12.3	3.27	.73	.87	.98	40.5	11.9	3.64	.74	.88	.99	39.0	11.4	4.07	.75	.90	1.00	37.4	11.0	4.55	.77	.91	1.00
	1400	660	42.8	12.5	3.28	.76	.90	1.00	41.3	12.1	3.66	.77	.92	1.00	39.7	11.6	4.08	.78	.93	1.00	38.1	11.2	4.56	.80	.95	1.00
	1550	730	43.5	12.7	3.30	.78	.93	1.00	42.0	12.3	3.67	.79	.95	1.00	40.4	11.8	4.09	.81	.96	1.00	38.8	11.4	4.58	.82	.98	1.00
67°F (19°C)	1250	590	44.6	13.1	3.32	.57	.70	.83	43.1	12.6	3.70	.58	.71	.85	41.4	12.1	4.12	.58	.73	.87	39.6	11.6	4.61	.59	.74	.88
	1400	660	45.3	13.3	3.34	.58	.73	.87	43.7	12.8	3.71	.59	.74	.88	42.0	12.3	4.14	.60	.76	.90	40.2	11.8	4.62	.61	.77	.92
	1550	730	45.9	13.5	3.35	.60	.76	.90	44.3	13.0	3.73	.61	.77	.92	42.5	12.5	4.16	.62	.79	.93	40.7	11.9	4.64	.63	.80	.95
71°F (22°C)	1250	590	47.5	13.9	3.38	.43	.55	.68	45.9	13.5	3.76	.43	.56	.69	44.1	12.9	4.19	.43	.57	.70	42.2	12.4	4.68	.43	.58	.72
	1400	660	48.2	14.1	3.40	.43	.57	.71	46.5	13.6	3.78	.43	.58	.72	44.7	13.1	4.21	.44	.59	.73	42.8	12.5	4.70	.44	.60	.75
	1550	730	48.8	14.3	3.41	.44	.59	.73	47.1	13.8	3.79	.44	.59	.75	45.2	13.2	4.22	.44	.60	.76	43.3	12.7	4.71	.45	.61	.78
HS29-042 - CR26-36W-F COOLING CAPACITY - RFC Systems Only																										
63°F (17°C)	1000	470	39.1	11.5	3.19	.69	.82	.92	37.9	11.1	3.56	.70	.82	.94	36.4	10.7	3.98	.71	.84	.96	34.9	10.2	4.46	.72	.86	.97
	1200	565	40.4	11.8	3.22	.72	.86	.98	39.1	11.5	3.59	.74	.87	.99	37.6	11.0	4.01	.75	.89	.99	36.0	10.6	4.49	.76	.91	1.00
	1400	660	41.5	12.2	3.24	.76	.90	1.00	40.0	11.7	3.61	.77	.92	1.00	38.5	11.3	4.03	.79	.94	1.00	36.9	10.8	4.51	.80	.96	1.00
67°F (19°C)	1000	470	41.8	12.3	3.25	.55	.67	.78	40.4	11.8	3.62	.55	.67	.79	38.8	11.4	4.04	.56	.69	.80	37.2	10.9	4.51	.56	.69	.82
	1200	565	43.0	12.6	3.27	.57	.70	.83	41.5	12.2	3.64	.57	.71	.84	39.9	11.7	4.06	.58	.72	.86	38.2	11.2	4.55	.59	.74	.88
	1400	660	43.9	12.9	3.29	.59	.73	.88	42.3	12.4	3.66	.60	.75	.89	40.7	11.9	4.09	.60	.76	.91	38.9	11.4	4.57	.61	.78	.93
71°F (22°C)	1000	470	44.5	13.0	3.31	.42	.53	.64	43.0	12.6	3.68	.42	.53	.65	41.4	12.1	4.10	.43	.54	.66	39.7	11.6	4.58	.43	.55	.67
	1200	565	45.8	13.4	3.33	.43	.55	.67	44.2	13.0	3.71	.43	.56	.69	42.5	12.5	4.13	.43	.56	.70	40.7	11.9	4.61	.43	.57	.71
	1400	660	46.7	13.7	3.35	.43	.57	.71	45.0	13.2	3.73	.44	.58	.72	43.3	12.7	4.15	.44	.59	.74	41.4	12.1	4.64	.44	.60	.76
HS29-042 - CR26-48N/W-F COOLING CAPACITY - RFC Systems Only																										
63°F (17°C)	1250	590	40.9	12.0	3.23	.72	.86	.98	39.5	11.6	3.60	.73	.88	.99	38.0	11.1	4.02	.74	.89	1.00	36.4	10.7	4.50	.76	.91	1.00
	1400	660	41.7	12.2	3.25	.75	.89	1.00	40.2	11.8	3.62	.76	.91	1.00	38.7	11.3	4.04	.77	.93	1.00	37.1	10.9	4.52	.79	.94	1.00
	1550	730	42.3	12.4	3.27	.77	.92	1.00	40.9	12.0	3.63	.78	.94	1.00	39.3	11.5	4.05	.80	.95	1.00	37.7	11.0	4.54	.82	.97	1.00
67°F (19°C)	1250	590	43.6	12.8	3.29	.57	.70	.83	42.1	12.3	3.66	.57	.71	.84	40.4	11.8	4.08	.58	.72	.86	38.7	11.3	4.57	.59	.73	.88
	1400	660	44.3	13.0	3.31	.58	.72	.86	42.7	12.5	3.67	.59	.74	.88	41.0	12.0	4.10	.60	.75	.90	39.2	11.5	4.58	.60	.77	.91
	1550	730	44.8	13.1	3.32	.59	.75	.89	43.2	12.7	3.69	.60	.76	.91	41.6	12.2	4.11	.61	.77	.93	39.7	11.6	4.59	.62	.79	.95
71°F (22°C)	1250	590	46.4	13.6	3.35	.43	.55	.67	44.8	13.1	3.73	.43	.56	.68	43.1	12.6	4.15	.43	.56	.70	41.2	12.1	4.64	.43	.57	.71
	1400	660	47.1	13.8	3.37	.43	.56	.70	45.5	13.3	3.74	.43	.57	.71	43.7	12.8	4.17	.43	.58	.73	41.8	12.3	4.65	.44	.59	.74
	1550	730	47.7	14.0	3.38	.44	.58	.72	46.0	13.5	3.76	.44	.59	.74	44.2	13.0	4.19	.44	.60	.75	42.3	12.4	4.67	.45	.61	.77
HS29-042 - CH33-42B-2F - CH23-41 COOLING CAPACITY - RFC Systems Only																										
63°F (17°C)	1250	590	40.7	11.9	3.21	.74	.88	.99	39.3	11.5	3.58	.75	.90	1.00	37.9	11.1	4.00	.76	.91	1.00	36.3	10.6	4.48	.78	.93	1.00
	1400	660	41.5	12.2	3.23	.77	.91	1.00	40.1	11.8	3.60	.78	.93	1.00	38.6	11.3	4.02	.79	.95	1.00	37.0	10.8	4.49	.81	.96	1.00
	1550	730	42.2	12.4	3.24	.79	.94	1.00	40.7	11.9	3.61	.81	.96	1.00	39.3	11.5	4.03	.82	.97	1.00	37.7	11.0	4.51	.84	.99	1.00
67°F (19°C)	1250	590	43.1	12.6	3.26	.58	.71	.85	41.6	12.2	3.63	.58	.73	.86	40.0	11.7	4.05	.59	.74	.88	38.3	11.2	4.53	.60	.75	.90
	1400	660	43.8	12.8	3.27	.59	.74	.88	42.2	12.4	3.64	.60	.76	.90	40.6	11.9	4.06	.61	.77	.92	38.9	11.4	4.55	.62	.79	.93
	1550	730	44.3	13.0	3.28	.61	.77	.92	42.8	12.5	3.65	.62	.79	.93	41.1	12.0	4.08	.63	.80	.95	39.3	11.5	4.56	.64	.82	.97
71°F (22°C)	1250	590	45.9	13.5	3.32	.43	.56	.69	44.3	13.0	3.69	.43	.57	.70	42.6	12.5	4.12	.43	.58	.72	40.8	12.0	4.59	.44	.59	.73
	1400	660	46.5	13.6	3.33	.43	.58	.72	44.9	13.2	3.71	.44	.59	.73	43.2	12.7	4.13	.44	.59	.75	41.3	12.1	4.62	.45	.61	.77
	1550	730	47.0	13.8	3.34	.44	.60	.75	45.4	13.3	3.72	.44	.60	.76	43.6	12.8	4.14	.45	.61	.78	41.7	12.2	4.63	.45	.63	.80
HS29-042 - CH33-48C-2F - CH23-51 COOLING CAPACITY - RFC Systems Only																										
63°F (17°C)	1250	590	41.6	12.2	3.24	.74	.88	.99	40.2	11.8	3.61	.75	.89	1.00	38.6	11.3	4.03	.76	.91	1.00	37.0	10.8	4.51	.78	.93	1.00
	1400	660	42.4	12.4	3.26	.76	.91	1.00	40.9	12.0	3.63	.78	.93	1.00	39.4	11.5	4.05	.79	.94	1.00	37.8	11.1	4.53	.81	.96	1.00
	1550	730	43.1	12.6	3.28	.79	.94	1.00	41.6	12.2	3.64	.81	.96	1.00	40.1	11.8	4.06	.82	.97	1.00	38.5	11.3	4.55	.84	.99	1.00
67°F (19°C)	1250	590	44.1	12.9	3.29	.57	.71	.84	42.5	12.5	3.66	.58	.72	.86	40.9	12.0	4.09	.59	.74	.88	39.1	11.5	4.57	.60	.75	.90
	1400	660	44.8	13.1	3.31	.59	.74	.88	43.2	12.7	3.68	.60	.75	.90	41.5	12.2	4.11	.61	.77	.91	39.7	11.6	4.59	.62	.79	.93
	1550	730	45.3	13.3	3.32	.61	.77	.91	43.7	12.8	3.70	.62	.78	.93	42.0	12.3	4.11	.62	.80	.95	40.2	11.8	4.60	.64	.82	.97
71°F (22°C)	1250	590	46.9	13.7	3.36	.43	.56	.69	45.3	13.3	3.73	.43	.57	.70	43.6	12.8	4.16	.43	.57	.71	41.7	12.2	4.64	.44	.58	.73
	1400	660	47.6	14.0	3.37	.43	.58	.72	45.9	13.5	3.74	.44	.58	.73	44.1	12.9	4.18	.44	.59	.75	42.2	12.4	4.66	.44	.60	.76
	1550	730	48.1	14.1	3.38	.44	.59	.75	46.4	13.6	3.76	.44	.60	.76	44.6	13.1	4.19	.45	.61	.78	42.7	12.5	4.67	.45	.63	.79

NOTE - For Temperatures and Capacities not shown in tables, see bulletin - Cooling Unit Rating Table Correction Factor Data in Miscellaneous Engineering Data section.

Entering Wet Bulb Temperature	Total Air Volume		Outdoor Air Temperature Entering Outdoor Coil																							
			85°F (29°C)						95°F (35°C)						105°F (41°C)						115°F (46°C)					
			Total Cooling Capacity		Comp Motor kW Input	Sensible To Total Ratio (S/T) Dry Bulb			Total Cooling Capacity		Comp Motor kW Input	Sensible To Total Ratio (S/T) Dry Bulb			Total Cooling Capacity		Comp Motor kW Input	Sensible To Total Ratio (S/T) Dry Bulb			Total Cooling Capacity		Comp Motor kW Input	Sensible To Total Ratio (S/T) Dry Bulb		
	cfm	L/s	kBtuh	kW		75°F 24°C	80°F 27°C	85°F 29°C	kBtuh	kW		75°F 24°C	80°F 27°C	85°F 29°C	kBtuh	kW		75°F 24°C	80°F 27°C	85°F 29°C	kBtuh	kW		75°F 24°C	80°F 27°C	85°F 29°C
HS29-048 - C33-44C COOLING CAPACITY - TXV Systems Only																										
63°F (17°C)	1200	565	45.0	13.2	3.61	.72	.84	.95	43.5	12.7	4.02	.73	.85	.97	42.0	12.3	4.51	.74	.86	.98	40.0	11.7	5.08	.75	.88	1.00
	1400	660	46.5	13.6	3.64	.75	.87	1.00	45.0	13.2	4.06	.76	.89	1.00	43.0	12.6	4.54	.77	.91	1.00	41.5	12.2	5.11	.78	.93	1.00
	1600	755	47.5	13.9	3.67	.77	.91	1.00	46.0	13.5	4.08	.79	.93	1.00	44.0	12.9	4.56	.80	.95	1.00	42.0	12.3	5.12	.81	.97	1.00
67°F (19°C)	1200	565	47.5	13.9	3.66	.58	.70	.81	46.0	13.5	4.08	.59	.70	.82	44.0	12.9	4.57	.59	.71	.83	42.5	12.5	5.13	.60	.73	.85
	1400	660	49.0	14.4	3.70	.60	.72	.84	47.5	13.9	4.12	.61	.73	.86	45.5	13.3	4.60	.61	.75	.88	43.5	12.7	5.15	.62	.76	.90
	1600	755	50.0	14.7	3.73	.62	.75	.88	48.5	14.2	4.14	.62	.76	.90	46.5	13.6	4.63	.63	.78	.92	44.5	13.0	5.18	.64	.79	.94
71°F (22°C)	1200	565	50.0	14.7	3.72	.46	.57	.67	48.0	14.1	4.14	.46	.57	.68	46.5	13.6	4.62	.46	.58	.69	44.5	13.0	5.18	.47	.59	.70
	1400	660	51.5	15.1	3.76	.47	.59	.70	49.5	14.5	4.17	.47	.59	.71	48.0	14.1	4.65	.47	.60	.72	46.0	13.5	5.21	.47	.61	.74
	1600	755	52.5	15.4	3.80	.48	.60	.73	51.0	14.9	4.21	.48	.61	.74	49.0	14.4	4.69	.48	.62	.76	47.0	13.8	5.23	.49	.63	.77
HS29-048 - C33-48B/C COOLING CAPACITY - TXV Systems Only																										
63°F (17°C)	1400	660	47.0	13.8	3.65	.74	.87	.98	45.5	13.3	4.07	.75	.88	1.00	43.5	12.7	4.56	.76	.90	1.00	41.5	12.2	5.11	.78	.92	1.00
	1600	755	48.0	14.1	3.68	.77	.90	1.00	46.5	13.6	4.09	.78	.92	1.00	44.5	13.0	4.58	.79	.94	1.00	43.0	12.6	5.14	.81	.96	1.00
	1800	850	49.0	14.4	3.70	.79	.94	1.00	47.5	13.9	4.12	.80	.95	1.00	45.5	13.3	4.60	.82	.97	1.00	44.0	12.9	5.16	.84	.99	1.00
67°F (19°C)	1400	660	49.5	14.5	3.71	.60	.72	.84	48.0	14.1	4.13	.60	.73	.85	46.0	13.5	4.61	.61	.74	.87	44.0	12.9	5.16	.62	.75	.89
	1600	755	50.5	14.8	3.75	.61	.75	.87	49.0	14.4	4.16	.62	.76	.89	47.0	13.8	4.64	.63	.77	.91	45.0	13.2	5.19	.64	.79	.93
	1800	850	51.5	15.1	3.77	.63	.77	.91	50.0	14.7	4.18	.64	.78	.93	48.0	14.1	4.66	.65	.80	.94	46.0	13.5	5.22	.66	.82	.97
71°F (22°C)	1400	660	52.0	15.2	3.78	.47	.58	.70	50.0	14.7	4.19	.47	.59	.71	48.5	14.2	4.67	.47	.60	.72	46.5	13.6	5.22	.48	.61	.73
	1600	755	53.5	15.7	3.81	.48	.60	.72	51.5	15.1	4.22	.48	.61	.74	49.5	14.5	4.70	.48	.62	.75	47.5	13.9	5.25	.48	.63	.76
	1800	850	54.0	15.8	3.84	.48	.62	.75	52.5	15.4	4.25	.49	.62	.76	50.5	14.8	4.72	.49	.64	.78	48.5	14.2	5.27	.50	.65	.80
HS29-048 - C33-50/60C COOLING CAPACITY - TXV Systems Only																										
63°F (17°C)	1400	660	47.5	13.9	3.66	.75	.87	.99	46.0	13.5	4.08	.76	.89	1.00	44.0	12.9	4.56	.77	.91	1.00	42.0	12.3	5.12	.78	.93	1.00
	1600	755	48.5	14.2	3.70	.77	.91	1.00	47.0	13.8	4.11	.78	.93	1.00	45.5	13.3	4.59	.80	.95	1.00	43.5	12.7	5.15	.81	.97	1.00
	1800	850	50.0	14.7	3.72	.80	.95	1.00	48.0	14.1	4.13	.81	.97	1.00	46.0	13.5	4.62	.83	.98	1.00	44.0	12.9	5.17	.85	1.00	1.00
67°F (19°C)	1400	660	50.0	14.7	3.73	.60	.72	.84	48.5	14.2	4.14	.61	.73	.86	46.5	13.6	4.62	.62	.75	.88	44.5	13.0	5.18	.62	.76	.89
	1600	755	51.5	15.1	3.76	.62	.75	.88	49.5	14.5	4.17	.62	.76	.90	47.5	13.9	4.65	.63	.78	.92	45.5	13.3	5.20	.64	.79	.94
	1800	850	52.0	15.2	3.79	.63	.78	.92	50.5	14.8	4.19	.64	.79	.94	48.5	14.2	4.67	.65	.81	.96	46.5	13.6	5.22	.66	.83	.98
71°F (22°C)	1400	660	52.5	15.4	3.80	.47	.59	.70	51.0	14.9	4.20	.47	.60	.71	49.0	14.4	4.69	.47	.60	.73	47.0	13.8	5.23	.48	.61	.74
	1600	755	54.0	15.8	3.83	.48	.60	.73	52.0	15.2	4.24	.48	.61	.74	50.0	14.7	4.71	.48	.62	.76	48.0	14.1	5.26	.49	.63	.77
	1800	850	55.0	16.1	3.86	.48	.62	.76	53.0	15.5	4.27	.49	.63	.77	51.0	14.9	4.74	.49	.64	.78	49.0	14.4	5.28	.50	.65	.80
HS29-048 - C33-60D COOLING CAPACITY - TXV Systems Only																										
63°F (17°C)	1400	660	48.0	14.1	3.68	.76	.88	1.00	46.5	13.6	4.10	.77	.90	1.00	44.5	13.0	4.57	.78	.92	1.00	42.5	12.5	5.13	.79	.94	1.00
	1600	755	49.5	14.5	3.71	.78	.93	1.00	47.5	13.9	4.12	.80	.94	1.00	46.0	13.5	4.60	.81	.96	1.00	44.0	12.9	5.16	.83	.98	1.00
	1800	850	50.5	14.8	3.74	.81	.96	1.00	48.5	14.2	4.15	.82	.98	1.00	47.0	13.8	4.63	.84	1.00	1.00	45.0	13.2	5.18	.86	1.00	1.00
67°F (19°C)	1400	660	50.5	14.8	3.74	.60	.73	.85	49.0	14.4	4.15	.61	.75	.87	47.0	13.8	4.63	.62	.76	.89	45.0	13.2	5.18	.63	.77	.91
	1600	755	51.5	15.1	3.77	.62	.76	.90	50.0	14.7	4.18	.63	.78	.91	48.0	14.1	4.66	.64	.79	.93	46.0	13.5	5.21	.65	.81	.96
	1800	850	53.0	15.5	3.80	.64	.79	.93	51.0	14.9	4.21	.65	.81	.95	49.0	14.4	4.69	.66	.82	.98	47.0	13.8	5.24	.67	.84	1.00
71°F (22°C)	1400	660	53.0	15.5	3.81	.47	.59	.71	51.5	15.1	4.23	.47	.60	.72	49.5	14.5	4.70	.48	.61	.74	47.5	13.9	5.24	.48	.62	.75
	1600	755	54.5	16.0	3.84	.48	.61	.74	52.5	15.4	4.25	.48	.62	.75	50.5	14.8	4.73	.49	.63	.77	48.5	14.2	5.28	.49	.64	.78
	1800	850	55.5	16.3	3.88	.48	.63	.77	53.5	15.7	4.28	.49	.64	.78	51.5	15.1	4.76	.50	.65	.80	49.5	14.5	5.30	.50	.66	.82
HS29-048 - C33-62D COOLING CAPACITY - TXV Systems Only																										
63°F (17°C)	1400	660	48.5	14.2	3.69	.75	.88	1.00	47.0	13.8	4.10	.76	.90	1.00	45.0	13.2	4.59	.78	.91	1.00	43.0	12.6	5.14	.79	.94	1.00
	1600	755	50.0	14.7	3.72	.78	.92	1.00	48.0	14.1	4.14	.79	.94	1.00	46.5	13.6	4.62	.80	.96	1.00	44.5	13.0	5.17	.82	.98	1.00
	1800	850	51.0	14.9	3.75	.81	.96	1.00	49.0	14.4	4.16	.82	.98	1.00	47.5	13.9	4.64	.84	1.00	1.00	45.5	13.3	5.20	.86	1.00	1.00
67°F (19°C)	1400	660	51.0	14.9	3.75	.61	.73	.85	49.0	14.4	4.16	.62	.74	.87	47.5	13.9	4.64	.62	.75	.88	45.5	13.3	5.19	.63	.77	.90
	1600	755	52.5	15.4	3.79	.62	.76	.89	50.5	14.8	4.20	.63	.77	.91	48.5	14.2	4.68	.64	.78	.93	46.5	13.6	5.23	.65	.80	.95
	1800	850	53.5	15.7	3.82	.64	.79	.93	51.5	15.1	4.22	.65	.80	.95	49.5	14.5	4.70	.66	.82	.97	47.5	13.9	5.25	.67	.84	.99
71°F (22°C)	1400	660	53.5	15.7	3.82	.47	.59	.71	51.5	15.1	4.23	.48	.60	.72	49.5	14.5	4.71	.48	.61	.73	47.5	13.9	5.25	.48	.61	.75
	1600	755	55.0	16.1	3.86	.48	.61	.74	53.0	15.5	4.26	.48	.62	.75	51.0	14.9	4.74	.49	.63	.76	49.0	14.4	5.28	.49	.64	.78
	1800	850	56.0	16.4	3.89	.49	.63	.77	54.0	15.8	4.29	.49	.64	.78	52.0	15.2	4.76	.50	.65	.80	49.5	14.5	5.31	.50	.66	.82
HS29-048 - C33-48C with G61MPV-60C COOLING CAPACITY - TXV Systems Only																										
63°F (17°C)	1385	655	46.5	13.6	3.64	.74	.86	.98	45.0	13.2	4.06	.75	.87	.99	43.5	12.7	4.55	.76	.89	1.00	41.5	12.2	5.11	.77	.91	1.00
	1565	740	48.0	14.1	3.67	.76	.89	1.00	46.5	13.6	4.09	.77	.91	1.00	44.5	13.0	4.57	.78	.93	1.00	42.5	12.5	5.13	.80	.95	1.00
	1720	810	49.0	14.4	3.70	.78	.92	1.00	47.0	13.8	4.11	.79	.94	1.00	45.5	13.3	4.59	.81	.96	1.00	43.5	12.7	5.15	.82	.98	1.00
67°F (19°C)	1385	655	49.5	14.5	3.71	.59	.71	.83	47.5	13.9	4.12	.60	.72	.84	46.0	13.5	4.61	.61	.73	.86	44.0	12.9	5.16	.61	.75	.88
	1565	740	50.5	14.8	3.74	.61	.74	.86	48.5	14.2	4.15	.62	.75	.88	47.0	13.8	4.63	.62	.76	.90	45.0	13.2	5.18	.63	.78	.92
	1720	810	51.5	15.1	3.76	.62	.76	.89	49.5	14.5	4.17	.63	.77	.91	47.5	13.9	4.65	.64	.79	.93	45.5	13.3	5.20	.65	.80	.95
71°F (22°C)	1385	655	51.5	15.1	3.77	.46	.58	.69	50.0	14.7	4.18	.47	.58	.70	48.0	14.1	4.67	.47	.59	.71	46.0	13.5	5.22	.47	.60	.72
	1565	740	53.0	15.5	3.80	.47	.59	.72	51.0	14.9	4.22	.47	.60	.73	49.5	14.5	4.70	.48	.61	.74	47.0	13.8	5.24	.48	.62	.75
	1720	810	54.0	15.8	3.83	.48	.61	.74	52.0	15.2	4.24	.48	.62	.75	50.0	14.7	4.72	.48	.63	.76	48.0	14.1	5.26	.49	.64	.78
HS29-048 - C33-50/60C with G61MPV-60C COOLING CAPACITY - TXV Systems Only																										
63°F (17°C)	1385	655	47.5	13.9	3.66	.74	.87	.99	45.5	13.3	4.08	.75	.88	1.00	44.0	12.9	4.56	.76	.90	1.00	42.0	12.3	5.11	.78	.92	1.00
	1565	740	48.5	14.2	3.69	.77	.91	1.00	46.5	13.6	4.10	.78	.92	1.00	45.0	13.2	4.58	.79	.94	1.00	43.0	12.6	5.14	.81	.96	1.00
	1720	810	49.5	14.5	3.71	.79	.93	1.00	47.5	13.9	4.12	.80	.95	1.00	46.0	13.5	4.61	.81	.97	1.00	44.0	12.9	5.16	.83	.99	1.00
67°F (19°C)	1385	655	50.0	14.7	3.73	.60	.72	.84	48.0	14.1	4.14	.60	.73	.85	46.5	13.6	4.62	.61	.74	.87	44.5	13.0	5.17	.62	.75	.89
	1565	740	51.0	14.9	3.75	.61	.74	.87	49.5	14.5	4.16	.62	.76	.89	47.5	13.9	4.65	.62	.77	.91	45.5	13.3	5.20	.63	.78	.93
	1720	810	52.0	15.2	3.78	.62	.77	.90	50.0	14.7	4.19	.63	.78	.92	48.0	14.1	4.66	.64	.79	.94	46.0	13.5	5.21	.65	.81	.96
71°F (22°C)	1385	655	52.5	15.4	3.79	.46	.58	.69	50.5	14.8	4.20	.47	.59	.71	48.5	14.2	4.68	.47	.60	.72	46.5	13.6	5.23	.47	.60	.73
	1565	740	53.5	15.7	3.82	.47	.60	.72	52.0	15.2	4.23	.47	.61	.73	50.0	14.7	4.71	.48	.61	.75	47.5	13.9	5.25	.48	.62	.76
	1720	810	54.5	16.0	3.85	.48	.61	.75	52.5	15.4	4.25	.48	.62	.76	50.5	14.8	4.73	.49	.63	.77	48.5	14.2	5.28	.49	.64	.79

NOTE - For Temperatures and Capacities not shown in tables, see bulletin - Cooling Unit Rating Table Correction Factor Data in Miscellaneous Engineering Data section.

Entering Wet Bulb Temperature	Total Air Volume		Outdoor Air Temperature Entering Outdoor Coil																							
			85°F (29°C)						95°F (35°C)						105°F (41°C)						115°F (46°C)					
			Total Cooling Capacity		Comp Motor kW Input	Sensible To Total Ratio (S/T) Dry Bulb			Total Cooling Capacity		Comp Motor kW Input	Sensible To Total Ratio (S/T) Dry Bulb			Total Cooling Capacity		Comp Motor kW Input	Sensible To Total Ratio (S/T) Dry Bulb			Total Cooling Capacity		Comp Motor kW Input	Sensible To Total Ratio (S/T) Dry Bulb		
	cfm	L/s	kBtuh	kW		75°F 24°C	80°F 27°C	85°F 29°C	kBtuh	kW		75°F 24°C	80°F 27°C	85°F 29°C	kBtuh	kW		75°F 24°C	80°F 27°C	85°F 29°C	kBtuh	kW		75°F 24°C	80°F 27°C	85°F 29°C
HS29-048 - C33-48C with G60UHV-60C COOLING CAPACITY - TXV Systems Only																										
63°F (17°C)	1455	685	47.0	13.8	3.66	.74	.87	.99	45.5	13.3	4.08	.75	.89	1.00	44.0	12.9	4.56	.77	.91	1.00	42.0	12.3	5.11	.78	.92	1.00
	1620	765	48.0	14.1	3.68	.77	.90	1.00	46.5	13.6	4.09	.78	.92	1.00	44.5	13.0	4.58	.79	.94	1.00	43.0	12.6	5.14	.80	.96	1.00
	1780	840	49.0	14.4	3.70	.78	.93	1.00	47.5	13.9	4.11	.80	.95	1.00	45.5	13.3	4.60	.81	.97	1.00	43.5	12.7	5.15	.83	.99	1.00
67°F (19°C)	1455	685	49.5	14.5	3.72	.60	.72	.84	48.0	14.1	4.14	.61	.73	.86	46.5	13.6	4.62	.61	.74	.88	44.5	13.0	5.17	.62	.76	.89
	1620	765	50.5	14.8	3.75	.61	.74	.87	49.0	14.4	4.16	.62	.76	.89	47.0	13.8	4.64	.62	.77	.91	45.0	13.2	5.18	.63	.78	.93
	1780	840	51.5	15.1	3.76	.62	.76	.90	49.5	14.5	4.17	.63	.78	.92	48.0	14.1	4.66	.64	.79	.94	46.0	13.5	5.21	.65	.81	.96
71°F (22°C)	1455	685	52.5	15.4	3.78	.47	.58	.70	50.5	14.8	4.20	.47	.59	.71	48.5	14.2	4.68	.47	.60	.72	46.5	13.6	5.23	.48	.61	.74
	1620	765	53.5	15.7	3.81	.47	.60	.72	51.5	15.1	4.23	.47	.61	.73	49.5	14.5	4.70	.48	.61	.75	47.5	13.9	5.25	.48	.62	.76
	1780	840	54.0	15.8	3.84	.48	.61	.74	52.0	15.2	4.24	.48	.62	.76	50.5	14.8	4.72	.48	.63	.77	48.0	14.1	5.26	.49	.64	.79
HS29-048 - C33-50/60C with G60UHV-60C COOLING CAPACITY - TXV Systems Only																										
63°F (17°C)	1455	685	47.5	13.9	3.67	.75	.88	1.00	46.0	13.5	4.09	.76	.90	1.00	44.5	13.0	4.57	.77	.91	1.00	42.5	12.5	5.13	.79	.94	1.00
	1620	765	48.5	14.2	3.70	.77	.91	1.00	47.0	13.8	4.11	.78	.93	1.00	45.0	13.2	4.59	.80	.95	1.00	43.5	12.7	5.15	.81	.97	1.00
	1780	840	49.5	14.5	3.71	.79	.94	1.00	48.0	14.1	4.13	.80	.96	1.00	46.0	13.5	4.61	.82	.98	1.00	44.0	12.9	5.17	.84	1.00	1.00
67°F (19°C)	1455	685	50.5	14.8	3.73	.60	.73	.85	48.5	14.2	4.15	.61	.74	.87	47.0	13.8	4.63	.61	.75	.88	45.0	13.2	5.18	.62	.77	.90
	1620	765	51.5	15.1	3.76	.62	.75	.88	49.5	14.5	4.17	.62	.76	.90	47.5	13.9	4.65	.63	.77	.92	45.5	13.3	5.20	.64	.79	.94
	1780	840	52.0	15.2	3.78	.63	.77	.91	50.5	14.8	4.19	.64	.78	.93	48.5	14.2	4.67	.64	.80	.95	46.5	13.6	5.22	.65	.82	.97
71°F (22°C)	1455	685	53.0	15.5	3.80	.47	.59	.71	51.0	14.9	4.21	.47	.59	.72	49.0	14.4	4.70	.47	.60	.73	47.0	13.8	5.24	.48	.61	.74
	1620	765	54.0	15.8	3.83	.47	.60	.73	52.0	15.2	4.24	.47	.61	.74	50.0	14.7	4.71	.48	.62	.75	48.0	14.1	5.26	.48	.63	.77
	1780	840	54.5	16.0	3.85	.48	.61	.75	53.0	15.5	4.26	.48	.62	.76	51.0	14.9	4.74	.48	.63	.78	48.5	14.2	5.29	.49	.64	.79
HS29-048 - CR26-48N/W-F COOLING CAPACITY - TXV Systems Only																										
63°F (17°C)	1200	565	44.5	13.0	3.59	.72	.84	.95	43.0	12.6	4.02	.73	.85	.97	41.5	12.2	4.51	.74	.86	.98	40.0	11.7	5.07	.75	.88	.99
	1400	660	46.0	13.5	3.63	.75	.87	.99	44.5	13.0	4.04	.76	.89	.99	43.0	12.6	4.54	.77	.91	1.00	41.0	12.0	5.10	.78	.93	1.00
	1600	755	47.0	13.8	3.65	.77	.91	1.00	45.5	13.3	4.07	.78	.93	1.00	43.5	12.7	4.55	.80	.94	1.00	42.0	12.3	5.11	.81	.97	1.00
67°F (19°C)	1200	565	47.0	13.8	3.65	.59	.70	.81	45.5	13.3	4.06	.59	.71	.82	43.5	12.7	4.55	.60	.72	.83	42.0	12.3	5.12	.60	.73	.85
	1400	660	48.5	14.2	3.68	.60	.73	.84	46.5	13.6	4.10	.61	.74	.86	45.0	13.2	4.59	.62	.75	.87	43.0	12.6	5.14	.62	.76	.90
	1600	755	49.5	14.5	3.71	.62	.75	.88	48.0	14.1	4.13	.63	.76	.90	46.0	13.5	4.62	.63	.78	.92	44.0	12.9	5.17	.65	.79	.94
71°F (22°C)	1200	565	49.0	14.4	3.71	.46	.57	.68	47.5	13.9	4.12	.46	.58	.68	46.0	13.5	4.61	.46	.58	.69	44.0	12.9	5.17	.46	.59	.71
	1400	660	50.5	14.8	3.74	.46	.59	.70	49.0	14.4	4.16	.47	.60	.71	47.5	13.9	4.64	.47	.60	.72	45.5	13.3	5.20	.48	.61	.74
	1600	755	52.0	15.2	3.78	.47	.60	.73	50.0	14.7	4.19	.48	.61	.74	48.5	14.2	4.67	.48	.62	.76	46.5	13.6	5.23	.48	.63	.77
HS29-048 - CR26-60N/W-F COOLING CAPACITY - TXV Systems Only																										
63°F (17°C)	1400	660	47.0	13.8	3.65	.76	.89	1.00	45.5	13.3	4.08	.77	.91	1.00	44.0	12.9	4.56	.79	.93	1.00	42.0	12.3	5.11	.80	.95	1.00
	1600	755	48.5	14.2	3.68	.79	.94	1.00	46.5	13.6	4.10	.80	.95	1.00	45.0	13.2	4.58	.82	.97	1.00	43.0	12.6	5.14	.84	.98	1.00
	1800	850	49.5	14.5	3.71	.82	.97	1.00	47.5	13.9	4.12	.83	.98	1.00	46.0	13.5	4.60	.85	.99	1.00	44.0	12.9	5.17	.87	1.00	1.00
67°F (19°C)	1400	660	49.5	14.5	3.72	.61	.74	.86	48.0	14.1	4.13	.62	.75	.88	46.0	13.5	4.62	.63	.76	.90	44.0	12.9	5.17	.64	.78	.92
	1600	755	51.0	14.9	3.75	.63	.77	.91	49.0	14.4	4.16	.64	.78	.93	47.0	13.8	4.63	.65	.80	.94	45.0	13.2	5.19	.66	.81	.96
	1800	850	52.0	15.2	3.77	.65	.80	.95	50.0	14.7	4.18	.66	.81	.96	48.0	14.1	4.66	.67	.83	.98	46.0	13.5	5.21	.68	.85	.99
71°F (22°C)	1400	660	52.0	15.2	3.78	.47	.60	.72	50.5	14.8	4.19	.47	.60	.73	48.5	14.2	4.68	.47	.61	.74	46.5	13.6	5.23	.48	.62	.76
	1600	755	53.5	15.7	3.81	.48	.62	.75	51.5	15.1	4.23	.48	.63	.76	49.5	14.5	4.70	.48	.64	.78	47.5	13.9	5.24	.49	.65	.79
	1800	850	54.5	16.0	3.84	.49	.64	.78	52.5	15.4	4.25	.49	.65	.79	50.5	14.8	4.72	.50	.66	.81	48.5	14.2	5.28	.51	.67	.83
HS29-048 - CH33-44/48B-2F COOLING CAPACITY - TXV Systems Only																										
63°F (17°C)	1400	660	47.0	13.8	3.65	.75	.88	1.00	45.5	13.3	4.07	.76	.89	1.00	43.5	12.7	4.55	.77	.91	1.00	41.5	12.2	5.12	.78	.94	1.00
	1600	755	48.0	14.1	3.68	.78	.92	1.00	46.5	13.6	4.10	.79	.94	1.00	44.5	13.0	4.57	.80	.96	1.00	42.5	12.5	5.13	.82	.98	1.00
	1800	850	49.0	14.4	3.70	.80	.96	1.00	47.5	13.9	4.11	.82	.98	1.00	45.5	13.3	4.59	.83	1.00	1.00	43.5	12.7	5.15	.85	1.00	1.00
67°F (19°C)	1400	660	49.5	14.5	3.71	.60	.72	.85	48.0	14.1	4.13	.61	.74	.86	46.0	13.5	4.61	.61	.75	.88	44.0	12.9	5.16	.62	.76	.90
	1600	755	51.0	14.9	3.75	.62	.75	.89	49.0	14.4	4.16	.62	.77	.91	47.0	13.8	4.64	.63	.78	.93	45.0	13.2	5.19	.64	.80	.95
	1800	850	52.0	15.2	3.77	.63	.78	.93	50.0	14.7	4.18	.64	.79	.95	48.0	14.1	4.66	.65	.81	.97	46.0	13.5	5.21	.66	.83	.99
71°F (22°C)	1400	660	52.0	15.2	3.78	.46	.58	.70	50.0	14.7	4.19	.47	.59	.71	48.5	14.2	4.67	.47	.60	.73	46.5	13.6	5.22	.47	.61	.74
	1600	755	53.0	15.5	3.81	.47	.60	.73	51.5	15.1	4.22	.47	.61	.74	49.5	14.5	4.70	.48	.62	.76	47.5	13.9	5.24	.48	.63	.77
	1800	850	54.0	15.8	3.84	.48	.62	.76	52.5	15.4	4.25	.48	.63	.77	50.5	14.8	4.72	.49	.64	.79	48.5	14.2	5.27	.49	.65	.81
HS29-048 - CH23-51 COOLING CAPACITY - TXV Systems Only																										
63°F (17°C)	1400	660	46.0	13.5	3.63	.75	.88	.99	44.5	13.0	4.05	.76	.90	1.00	43.0	12.6	4.54	.77	.91	1.00	41.0	12.0	5.09	.79	.93	1.00
	1600	755	47.5	13.9	3.66	.78	.92	1.00	45.5	13.3	4.08	.79	.94	1.00	44.0	12.9	4.56	.80	.95	1.00	42.0	12.3	5.12	.82	.97	1.00
	1800	850	48.5	14.2	3.68	.81	.95	1.00	46.5	13.6	4.10	.82	.97	1.00	45.0	13.2	4.58	.84	.99	1.00	43.0	12.6	5.14	.85	1.00	1.00
67°F (19°C)	1400	660	48.5	14.2	3.69	.60	.73	.85	47.0	13.8	4.11	.61	.74	.87	45.5	13.3	4.59	.62	.75	.88	43.5	12.7	5.15	.62	.77	.90
	1600	755	50.0	14.7	3.72	.62	.76	.89	48.0	14.1	4.14	.63	.77	.91	46.5	13.6	4.62	.63	.78	.93	44.5	13.0	5.17	.65	.80	.95
	1800	850	51.0	14.9	3.75	.64	.79	.93	49.0	14.4	4.16	.65	.80	.94	47.5	13.9	4.64	.65	.82	.96	45.0	13.2	5.19	.67	.83	.98
71°F (22°C)	1400	660	51.0	14.9	3.75	.47	.59	.71	49.5	14.5	4.17	.47	.59	.72	47.5	13.9	4.65	.47	.60	.73	45.5	13.3	5.21	.48	.61	.74
	1600	755	52.5	15.4	3.79	.47	.61	.74	50.5	14.8	4.20	.48	.61	.75	48.5	14.2	4.68	.48	.62	.76	46.5	13.6	5.22	.49	.63	.78
	1800	850	53.5	15.7	3.82	.48	.63	.77	51.5	15.1	4.23	.49	.63	.78	49.5	14.5	4.70	.49	.64	.80	47.5	13.9	5.25	.49	.66	.81
HS29-048 - CH33-50/60C-2F COOLING CAPACITY - TXV Systems Only																										
63°F (17°C)	1400	660	48.0	14.1	3.68	.75	.88	1.00	46.5	13.6	4.10	.76	.90	1.00	44.5	13.0	4.57	.77	.91	1.00	42.5	12.5	5.13	.79	.94	1.00
	1600	755	49.5	14.5	3.71	.78	.92	1.00	47.5	13.9	4.12	.79	.94	1.00	46.0	13.5	4.61	.81	.96	1.00	44.0	12.9	5.16	.82	.98	1.00
	1800	850	50.5	14.8	3.73	.81	.96	1.00	48.5	14.2	4.15	.82	.98	1.00	47.0	13.8	4.63	.84	1.00	1.00	45.0	13.2	5.18	.85	1.00	1.00
67°F (19°C)	1400	660	50.5	14.8	3.75	.60	.73	.85	49.0	14.4	4.16	.61	.74	.87	47.0	13.8	4.64	.62	.75	.88	45.0	13.2	5.19	.63	.77	.90
	1600	755	52.0	15.2	3.78	.62	.76	.89	50.0	14.7	4.19	.63	.77	.91	48.5	14.2	4.67	.64	.78	.93	46.0	13.5	5.21	.65	.80	.95
	1800	850	53.0	15.5	3.81	.64	.79	.93	51.0	14.9	4.21	.65	.80	.95	49.0	14.4	4.69	.66	.82	.97	47.0	13.8	5.24	.67	.83	.99
71°F (22°C)	1400	660	53.0	15.5	3.81	.47	.59	.71	51.5	15.1	4.22	.47	.60	.72	49.5	14.5	4.70	.47	.60	.73	47.5	13.9	5.24	.48	.61	.74
	1600	755	54.5	16.0	3.85	.48	.61	.74	52.5	15.4	4.26	.48	.62	.75	50.5	14.8	4.73	.48	.63	.76	48.5	14.2	5.28	.49	.64	.78
	1800	850	55.5	16.3	3.88	.48	.63	.77	53.5	15.7	4.29	.49	.64	.78	51.5	15.1	4.76	.49	.65	.80	49.5	14.5	5.30	.50	.66	.81

NOTE - For Temperatures and Capacities not shown in tables, see bulletin - Cooling Unit Rating Table Correction Factor Data in Miscellaneous Engineering Data section.

Entering Wet Bulb Temperature	Total Air Volume		Outdoor Air Temperature Entering Outdoor Coil																							
			85°F (29°C)						95°F (35°C)						105°F (41°C)						115°F (46°C)					
			Total Cooling Capacity		Comp Motor kW Input	Sensible To Total Ratio (S/T) Dry Bulb			Total Cooling Capacity		Comp Motor kW Input	Sensible To Total Ratio (S/T) Dry Bulb			Total Cooling Capacity		Comp Motor kW Input	Sensible To Total Ratio (S/T) Dry Bulb			Total Cooling Capacity		Comp Motor kW Input	Sensible To Total Ratio (S/T) Dry Bulb		
	cfm	L/s	kBtuh	kW		75°F 24°C	80°F 27°C	85°F 29°C	kBtuh	kW		75°F 24°C	80°F 27°C	85°F 29°C	kBtuh	kW		75°F 24°C	80°F 27°C	85°F 29°C	kBtuh	kW		75°F 24°C	80°F 27°C	85°F 29°C
HS29-048 - CH23-65 COOLING CAPACITY - TXV Systems Only																										
63°F (17°C)	1400	660	46.5	13.6	3.64	.75	.89	1.00	45.0	13.2	4.06	.76	.90	1.00	43.5	12.7	4.55	.78	.92	1.00	41.5	12.2	5.10	.79	.94	1.00
	1600	755	48.0	14.1	3.67	.78	.93	1.00	46.0	13.5	4.09	.80	.94	1.00	44.5	13.0	4.56	.81	.96	1.00	42.5	12.5	5.12	.83	.98	1.00
	1800	850	49.0	14.4	3.70	.81	.96	1.00	47.0	13.8	4.11	.83	.98	1.00	45.5	13.3	4.59	.84	.99	1.00	43.5	12.7	5.16	.86	1.00	1.00
67°F (19°C)	1400	660	49.0	14.4	3.70	.61	.73	.86	47.5	13.9	4.12	.61	.74	.87	45.5	13.3	4.60	.62	.76	.89	43.5	12.7	5.15	.63	.77	.91
	1600	755	50.5	14.8	3.74	.62	.76	.90	48.5	14.2	4.14	.63	.77	.92	47.0	13.8	4.62	.64	.79	.93	44.5	13.0	5.18	.65	.81	.95
	1800	850	51.5	15.1	3.76	.64	.79	.94	49.5	14.5	4.17	.65	.81	.95	47.5	13.9	4.65	.66	.82	.97	45.5	13.3	5.20	.67	.84	.99
71°F (22°C)	1400	660	51.5	15.1	3.77	.47	.59	.71	50.0	14.7	4.18	.47	.60	.72	48.0	14.1	4.66	.47	.61	.73	46.0	13.5	5.21	.48	.62	.75
	1600	755	53.0	15.5	3.80	.48	.61	.74	51.0	14.9	4.21	.48	.62	.75	49.0	14.4	4.69	.48	.63	.77	47.0	13.8	5.24	.49	.64	.79
	1800	850	54.0	15.8	3.83	.48	.63	.77	52.0	15.2	4.24	.49	.64	.79	50.0	14.7	4.71	.49	.65	.80	48.0	14.1	5.26	.50	.66	.82
HS29-048 - CH33-62D-2F COOLING CAPACITY - TXV Systems Only																										
63°F (17°C)	1400	660	48.0	14.1	3.68	.75	.87	.99	46.5	13.6	4.10	.76	.89	1.00	44.5	13.0	4.58	.77	.90	1.00	43.0	12.6	5.13	.78	.92	1.00
	1600	755	49.5	14.5	3.71	.77	.91	1.00	48.0	14.1	4.12	.78	.93	1.00	46.0	13.5	4.61	.80	.95	1.00	44.0	12.9	5.16	.82	.97	1.00
	1800	850	50.5	14.8	3.74	.80	.95	1.00	48.5	14.2	4.15	.81	.97	1.00	47.0	13.8	4.63	.83	.98	1.00	44.5	13.0	5.18	.85	1.00	1.00
67°F (19°C)	1400	660	50.5	14.8	3.74	.60	.73	.84	49.0	14.4	4.15	.61	.74	.86	47.0	13.8	4.63	.62	.75	.87	45.0	13.2	5.18	.63	.76	.89
	1600	755	52.0	15.2	3.78	.62	.75	.88	50.0	14.7	4.19	.63	.76	.90	48.0	14.1	4.67	.63	.78	.92	46.0	13.5	5.21	.64	.79	.94
	1800	850	53.0	15.5	3.81	.64	.78	.92	51.0	14.9	4.22	.64	.79	.94	49.0	14.4	4.69	.65	.81	.96	47.0	13.8	5.24	.67	.83	.98
71°F (22°C)	1400	660	53.0	15.5	3.80	.47	.59	.70	51.0	14.9	4.22	.47	.60	.71	49.5	14.5	4.70	.48	.60	.73	47.0	13.8	5.24	.48	.61	.74
	1600	755	54.5	16.0	3.84	.48	.61	.73	52.5	15.4	4.25	.48	.61	.74	50.5	14.8	4.73	.48	.62	.76	48.5	14.2	5.28	.49	.63	.77
	1800	850	55.5	16.3	3.88	.48	.63	.76	53.5	15.7	4.28	.49	.63	.77	51.5	15.1	4.76	.49	.64	.79	49.5	14.5	5.30	.50	.66	.81
HS29-048 - CH23-68 COOLING CAPACITY - TXV Systems Only																										
63°F (17°C)	1400	660	48.5	14.2	3.68	.76	.89	1.00	46.5	13.6	4.10	.77	.91	1.00	45.0	13.2	4.58	.78	.92	1.00	43.0	12.6	5.14	.80	.95	1.00
	1600	755	49.5	14.5	3.71	.79	.93	1.00	48.0	14.1	4.13	.80	.95	1.00	46.0	13.5	4.61	.82	.97	1.00	44.0	12.9	5.16	.83	.99	1.00
	1800	850	50.5	14.8	3.74	.82	.97	1.00	49.0	14.4	4.16	.84	.99	1.00	47.0	13.8	4.64	.85	1.00	1.00	45.5	13.3	5.20	.87	1.00	1.00
67°F (19°C)	1400	660	51.0	14.9	3.75	.61	.74	.86	49.0	14.4	4.16	.61	.75	.88	47.0	13.8	4.64	.62	.76	.90	45.0	13.2	5.19	.63	.78	.92
	1600	755	52.0	15.2	3.78	.63	.77	.91	50.5	14.8	4.19	.64	.78	.92	48.5	14.2	4.67	.64	.80	.94	46.5	13.6	5.22	.65	.81	.96
	1800	850	53.0	15.5	3.81	.65	.80	.95	51.5	15.1	4.22	.66	.82	.96	49.5	14.5	4.69	.67	.83	.98	47.0	13.8	5.24	.68	.85	1.00
71°F (22°C)	1400	660	53.5	15.7	3.82	.47	.59	.71	52.0	15.2	4.24	.47	.60	.73	50.0	14.7	4.71	.47	.61	.74	47.5	13.9	5.26	.48	.62	.75
	1600	755	55.0	16.1	3.86	.48	.62	.75	53.0	15.5	4.27	.48	.62	.76	51.0	14.9	4.74	.48	.63	.78	49.0	14.4	5.28	.49	.64	.79
	1800	850	56.0	16.4	3.89	.48	.64	.78	54.0	15.8	4.30	.49	.65	.80	52.0	15.2	4.77	.49	.66	.81	49.5	14.5	5.31	.50	.67	.83
HS29-048 - CH33-48C-2F with G60UHV-60C COOLING CAPACITY - TXV Systems Only																										
63°F (17°C)	1455	685	48.0	14.1	3.67	.75	.88	1.00	46.5	13.6	4.09	.76	.90	1.00	44.5	13.0	4.57	.77	.91	1.00	42.5	12.5	5.13	.79	.94	1.00
	1620	765	49.0	14.4	3.70	.77	.91	1.00	47.0	13.8	4.11	.78	.93	1.00	45.5	13.3	4.59	.80	.95	1.00	43.5	12.7	5.15	.81	.97	1.00
	1780	840	49.5	14.5	3.72	.79	.94	1.00	48.0	14.1	4.13	.80	.96	1.00	46.0	13.5	4.61	.82	.98	1.00	44.0	12.9	5.17	.84	1.00	1.00
67°F (19°C)	1455	685	50.5	14.8	3.74	.60	.73	.85	48.5	14.2	4.15	.61	.74	.87	47.0	13.8	4.63	.61	.75	.88	45.0	13.2	5.18	.62	.76	.90
	1620	765	51.5	15.1	3.76	.62	.75	.88	49.5	14.5	4.17	.62	.76	.90	48.0	14.1	4.65	.63	.77	.92	46.0	13.5	5.20	.64	.79	.94
	1780	840	52.0	15.2	3.79	.63	.77	.91	50.5	14.8	4.20	.63	.78	.93	48.5	14.2	4.67	.64	.80	.95	46.5	13.6	5.22	.65	.82	.97
71°F (22°C)	1455	685	53.0	15.5	3.80	.47	.59	.71	51.0	14.9	4.21	.47	.59	.72	49.0	14.4	4.70	.47	.60	.73	47.0	13.8	5.24	.47	.61	.74
	1620	765	54.0	15.8	3.83	.47	.60	.73	52.0	15.2	4.24	.48	.61	.74	50.0	14.7	4.72	.48	.62	.75	48.0	14.1	5.26	.48	.63	.77
	1780	840	54.5	16.0	3.85	.48	.61	.75	53.0	15.5	4.27	.48	.63	.76	51.0	14.9	4.74	.49	.63	.78	49.0	14.4	5.28	.49	.64	.80
HS29-048 - CH33-48C-2F with G61MPV-60C COOLING CAPACITY - TXV Systems Only																										
63°F (17°C)	1385	655	47.5	13.9	3.66	.74	.87	.99	46.0	13.5	4.08	.75	.88	1.00	44.0	12.9	4.56	.76	.90	1.00	42.0	12.3	5.12	.77	.92	1.00
	1565	740	48.5	14.2	3.69	.77	.90	1.00	47.0	13.8	4.10	.78	.92	1.00	45.0	13.2	4.59	.79	.94	1.00	43.0	12.6	5.14	.81	.96	1.00
	1720	810	49.5	14.5	3.71	.79	.93	1.00	47.5	13.9	4.12	.80	.95	1.00	46.0	13.5	4.60	.81	.97	1.00	44.0	12.9	5.16	.83	.99	1.00
67°F (19°C)	1385	655	50.0	14.7	3.73	.60	.72	.84	48.5	14.2	4.14	.60	.73	.85	46.5	13.6	4.62	.61	.74	.87	44.5	13.0	5.18	.62	.75	.89
	1565	740	51.0	14.9	3.76	.61	.75	.87	49.5	14.5	4.17	.62	.76	.89	47.5	13.9	4.65	.62	.77	.91	45.5	13.3	5.20	.64	.78	.93
	1720	810	52.0	15.2	3.78	.62	.77	.90	50.0	14.7	4.19	.63	.78	.92	48.5	14.2	4.67	.64	.79	.94	46.0	13.5	5.22	.65	.81	.96
71°F (22°C)	1385	655	52.5	15.4	3.79	.47	.58	.70	50.5	14.8	4.20	.47	.59	.71	49.0	14.4	4.68	.47	.60	.72	46.5	13.6	5.23	.47	.60	.73
	1565	740	53.5	15.7	3.82	.47	.60	.72	52.0	15.2	4.24	.47	.61	.73	50.0	14.7	4.71	.48	.61	.75	48.0	14.1	5.25	.48	.62	.76
	1720	810	54.5	16.0	3.85	.48	.61	.74	52.5	15.4	4.26	.48	.62	.76	50.5	14.8	4.73	.49	.63	.77	48.5	14.2	5.28	.49	.64	.79
HS29-048 - CH33-50/60C-2F with G60UHV-60C COOLING CAPACITY - TXV Systems Only																										
63°F (17°C)	1455	685	48.5	14.2	3.69	.75	.89	1.00	46.5	13.6	4.10	.76	.90	1.00	45.0	13.2	4.58	.78	.92	1.00	43.0	12.6	5.14	.79	.95	1.00
	1620	765	49.5	14.5	3.71	.78	.92	1.00	47.5	13.9	4.12	.79	.94	1.00	46.0	13.5	4.60	.80	.96	1.00	44.0	12.9	5.16	.82	.98	1.00
	1780	840	50.0	14.7	3.73	.80	.95	1.00	48.5	14.2	4.14	.81	.97	1.00	46.5	13.6	4.62	.83	.99	1.00	44.5	13.0	5.18	.85	1.00	1.00
67°F (19°C)	1455	685	51.0	14.9	3.76	.60	.73	.86	49.5	14.5	4.17	.61	.74	.88	47.5	13.9	4.64	.62	.76	.89	45.5	13.3	5.20	.63	.77	.91
	1620	765	52.0	15.2	3.78	.62	.76	.89	50.0	14.7	4.19	.63	.77	.91	48.5	14.2	4.67	.63	.78	.93	46.0	13.5	5.22	.64	.80	.95
	1780	840	53.0	15.5	3.80	.63	.78	.92	51.0	14.9	4.21	.64	.79	.94	49.0	14.4	4.69	.65	.81	.96	47.0	13.8	5.24	.66	.83	.98
71°F (22°C)	1455	685	53.5	15.7	3.82	.47	.59	.71	51.5	15.1	4.23	.47	.60	.72	50.0	14.7	4.71	.47	.61	.73	47.5	13.9	5.25	.48	.61	.75
	1620	765	54.5	16.0	3.85	.47	.60	.74	52.5	15.4	4.25	.48	.61	.75	50.5	14.8	4.73	.48	.62	.76	48.5	14.2	5.28	.48	.63	.78
	1780	840	55.5	16.3	3.87	.48	.62	.76	53.5	15.7	4.28	.48	.63	.77	51.5	15.1	4.75	.49	.64	.79	49.5	14.5	5.30	.49	.65	.81
HS29-048 - CH33-50/60C-2F with G61MPV-60C COOLING CAPACITY - TXV Systems Only																										
63°F (17°C)	1385	655	48.0	14.1	3.67	.74	.87	1.00	46.5	13.6	4.09	.75	.89	1.00	44.5	13.0	4.57	.77	.91	1.00	42.5	12.5	5.13	.78	.93	1.00
	1565	740	49.0	14.4	3.70	.77	.91	1.00	47.5	13.9	4.11	.78	.93	1.00	45.5	13.3	4.60	.80	.95	1.00	43.5	12.7	5.15	.81	.97	1.00
	1720	810	50.0	14.7	3.73	.79	.94	1.00	48.0	14.1	4.14	.81	.96	1.00	46.5	13.6	4.62	.82	.98	1.00	44.5	13.0	5.17	.84	1.00	1.00
67°F (19°C)	1385	655	50.5	14.8	3.74	.60	.72	.84	49.0	14.4	4.15	.60	.73	.86	47.0	13.8	4.63	.61	.74	.88	45.0	13.2	5.18	.62	.76	.89
	1565	740	52.0	15.2	3.77	.62	.75	.88	50.0	14.7	4.18	.62	.76	.90	48.0	14.1	4.66	.63	.78	.92	46.0	13.5	5.22	.64	.79	.94
	1720	810	52.5	15.4	3.79	.63	.77	.91	51.0	14.9	4.20	.64	.79	.93	49.0	14.4	4.68	.65	.80	.95	46.5	13.6	5.23	.66	.82	.98
71°F (22°C)	1385	655	53.0	15.5	3.81	.46	.58	.70	51.5	15.1	4.22	.47	.59	.71	49.5	14.5	4.70	.47	.60	.72	47.5	13.9	5.24	.47	.61	.74
	1565	740	54.5	16.0	3.84	.47	.60	.73	52.5	15.4	4.25	.47	.61	.74	50.5	14.8	4.72	.48	.62	.75	48.5	14.2	5.28	.48	.63	.77
	1720	810	55.0	16.1	3.86	.48	.62	.75	53.5	15.7	4.27	.48	.62	.77	51.5	15.1	4.75	.49	.64	.78	49.0	14.4	5.29	.49	.65	.80

NOTE - For Temperatures and Capacities not shown in tables, see bulletin - Cooling Unit Rating Table Correction Factor Data in Miscellaneous Engineering Data section.

Entering Wet Bulb Temperature	Total Air Volume		Outdoor Air Temperature Entering Outdoor Coil																							
			85°F (29°C)						95°F (35°C)						105°F (41°C)						115°F (46°C)					
			Total Cooling Capacity		Comp Motor kW Input	Sensible To Total Ratio (S/T) Dry Bulb			Total Cooling Capacity		Comp Motor kW Input	Sensible To Total Ratio (S/T) Dry Bulb			Total Cooling Capacity		Comp Motor kW Input	Sensible To Total Ratio (S/T) Dry Bulb			Total Cooling Capacity		Comp Motor kW Input	Sensible To Total Ratio (S/T) Dry Bulb		
	cfm	L/s	kBtuh	kW		75°F 24°C	80°F 27°C	85°F 29°C	kBtuh	kW		75°F 24°C	80°F 27°C	85°F 29°C	kBtuh	kW		75°F 24°C	80°F 27°C	85°F 29°C	kBtuh	kW		75°F 24°C	80°F 27°C	85°F 29°C
HS29-048 - CB30M-41 - CB30U-41/46 COOLING CAPACITY - TXV Systems Only																										
63°F (17°C)	1050	495	42.0	12.3	3.54	.71	.83	.94	41.0	12.0	3.97	.72	.84	.96	39.0	11.4	4.46	.73	.86	.97	37.4	11.0	5.03	.74	.88	.99
	1250	590	44.0	12.9	3.58	.74	.88	.99	42.5	12.5	4.00	.75	.89	1.00	40.5	11.9	4.49	.77	.91	1.00	39.0	11.4	5.05	.78	.92	1.00
	1450	685	45.0	13.2	3.61	.78	.92	1.00	43.5	12.7	4.02	.79	.93	1.00	42.0	12.3	4.51	.80	.95	1.00	40.0	11.7	5.08	.82	.97	1.00
67°F (19°C)	1050	495	44.5	13.0	3.59	.57	.69	.80	43.0	12.6	4.01	.58	.70	.81	41.5	12.2	4.50	.59	.71	.82	39.5	11.6	5.07	.59	.72	.84
	1250	590	46.0	13.5	3.63	.59	.72	.85	44.5	13.0	4.05	.60	.73	.86	43.0	12.6	4.54	.61	.74	.88	41.0	12.0	5.10	.62	.76	.89
	1450	685	47.5	13.9	3.66	.61	.75	.89	46.0	13.5	4.08	.62	.77	.90	44.0	12.9	4.56	.63	.78	.92	42.0	12.3	5.12	.64	.80	.94
71°F (22°C)	1050	495	46.5	13.6	3.64	.45	.56	.66	45.0	13.2	4.06	.45	.56	.67	43.5	12.7	4.55	.45	.57	.68	41.5	12.2	5.11	.46	.58	.70
	1250	590	48.5	14.2	3.68	.46	.58	.70	46.5	13.6	4.10	.46	.59	.71	45.0	13.2	4.59	.46	.59	.72	43.0	12.6	5.14	.47	.60	.74
	1450	685	49.5	14.5	3.72	.47	.60	.73	48.0	14.1	4.13	.47	.61	.74	46.0	13.5	4.61	.47	.62	.76	44.0	12.9	5.17	.48	.63	.78
HS29-048 - CB31MV-41 COOLING CAPACITY - TXV Systems Only																										
63°F (17°C)	1265	595	44.0	12.9	3.58	.74	.88	.99	42.5	12.5	4.00	.76	.89	1.00	40.5	11.9	4.49	.77	.91	1.00	39.0	11.4	5.06	.78	.93	1.00
	1400	660	45.0	13.2	3.60	.77	.91	1.00	43.5	12.7	4.02	.78	.92	1.00	41.5	12.2	4.51	.79	.94	1.00	40.0	11.7	5.07	.81	.96	1.00
	1545	730	45.5	13.3	3.62	.79	.94	1.00	44.0	12.9	4.04	.81	.95	1.00	42.5	12.5	4.52	.82	.97	1.00	40.5	11.9	5.08	.84	.98	1.00
67°F (19°C)	1265	595	46.0	13.5	3.63	.59	.72	.85	44.5	13.0	4.05	.60	.73	.86	43.0	12.6	4.54	.61	.75	.88	41.0	12.0	5.10	.62	.76	.90
	1400	660	47.0	13.8	3.66	.61	.75	.88	45.5	13.3	4.07	.62	.76	.89	44.0	12.9	4.56	.63	.77	.91	42.0	12.3	5.12	.64	.79	.93
	1545	730	48.0	14.1	3.68	.63	.77	.91	46.5	13.6	4.09	.64	.79	.92	44.5	13.0	4.58	.65	.80	.94	42.5	12.5	5.13	.66	.82	.96
71°F (22°C)	1265	595	48.5	14.2	3.69	.46	.58	.70	47.0	13.8	4.10	.46	.59	.71	45.0	13.2	4.59	.46	.60	.72	43.0	12.6	5.14	.47	.60	.74
	1400	660	49.5	14.5	3.71	.47	.60	.72	47.5	13.9	4.13	.47	.60	.74	46.0	13.5	4.61	.47	.61	.75	44.0	12.9	5.16	.48	.62	.77
	1545	730	50.5	14.8	3.73	.48	.62	.75	48.5	14.2	4.15	.48	.62	.76	46.5	13.6	4.63	.48	.63	.78	44.5	13.0	5.18	.49	.65	.80
HS29-048 - CB29M-46 - CB28UH-042 COOLING CAPACITY - TXV Systems Only																										
63°F (17°C)	1450	685	45.0	13.2	3.61	.77	.92	1.00	43.5	12.7	4.03	.79	.93	1.00	42.0	12.3	4.51	.80	.95	1.00	40.0	11.7	5.07	.82	.96	1.00
	1550	730	45.5	13.3	3.62	.79	.93	1.00	44.0	12.9	4.03	.80	.95	1.00	42.5	12.5	4.52	.82	.97	1.00	40.5	11.9	5.08	.84	.98	1.00
	1650	780	46.0	13.5	3.63	.81	.95	1.00	44.5	13.0	4.04	.82	.97	1.00	42.5	12.5	4.53	.84	.98	1.00	41.0	12.0	5.09	.86	1.00	1.00
67°F (19°C)	1450	685	47.5	13.9	3.66	.62	.75	.89	45.5	13.3	4.08	.62	.77	.90	44.0	12.9	4.56	.63	.78	.92	42.0	12.3	5.12	.64	.80	.94
	1550	730	48.0	14.1	3.67	.63	.77	.91	46.5	13.6	4.09	.64	.78	.92	44.5	13.0	4.57	.65	.80	.94	42.5	12.5	5.13	.66	.82	.96
	1650	780	48.5	14.2	3.69	.64	.79	.93	46.5	13.6	4.10	.65	.80	.94	45.0	13.2	4.58	.66	.82	.96	43.0	12.6	5.14	.67	.84	.98
71°F (22°C)	1450	685	49.5	14.5	3.72	.47	.60	.73	48.0	14.1	4.13	.48	.61	.74	46.0	13.5	4.61	.48	.62	.76	44.0	12.9	5.17	.48	.63	.77
	1550	730	50.0	14.7	3.73	.48	.62	.75	48.5	14.2	4.14	.48	.62	.76	46.5	13.6	4.63	.49	.63	.78	44.5	13.0	5.18	.49	.65	.80
	1650	780	50.5	14.8	3.75	.49	.63	.77	49.0	14.4	4.16	.49	.64	.78	47.0	13.8	4.64	.49	.65	.80	45.0	13.2	5.19	.50	.66	.82
HS29-048 - CB30M-46 COOLING CAPACITY - TXV Systems Only																										
63°F (17°C)	1250	590	44.0	12.9	3.58	.74	.87	.99	42.5	12.5	4.00	.75	.89	1.00	40.5	11.9	4.49	.77	.91	1.00	39.0	11.4	5.05	.78	.92	1.00
	1400	660	45.0	13.2	3.60	.77	.91	1.00	43.0	12.6	4.02	.78	.92	1.00	41.5	12.2	4.51	.79	.94	1.00	39.5	11.6	5.07	.81	.96	1.00
	1550	730	45.5	13.3	3.62	.79	.94	1.00	44.0	12.9	4.04	.81	.95	1.00	42.5	12.5	4.52	.82	.97	1.00	40.5	11.9	5.08	.84	.98	1.00
67°F (19°C)	1250	590	46.0	13.5	3.63	.59	.72	.84	44.5	13.0	4.05	.60	.73	.86	43.0	12.6	4.53	.61	.74	.88	41.0	12.0	5.10	.62	.76	.89
	1400	660	47.0	13.8	3.66	.61	.74	.88	45.5	13.3	4.07	.62	.76	.89	43.5	12.7	4.56	.62	.77	.91	42.0	12.3	5.12	.63	.79	.93
	1550	730	48.0	14.1	3.68	.63	.77	.91	46.5	13.6	4.09	.63	.78	.92	44.5	13.0	4.58	.64	.80	.94	42.5	12.5	5.13	.65	.82	.96
71°F (22°C)	1250	590	48.5	14.2	3.68	.46	.58	.70	46.5	13.6	4.10	.46	.59	.71	45.0	13.2	4.58	.46	.59	.72	43.0	12.6	5.14	.47	.60	.74
	1400	660	49.5	14.5	3.71	.47	.60	.72	47.5	13.9	4.12	.47	.60	.74	46.0	13.5	4.61	.47	.61	.75	44.0	12.9	5.16	.47	.62	.77
	1550	730	50.5	14.8	3.73	.47	.61	.75	48.5	14.2	4.15	.48	.62	.76	46.5	13.6	4.63	.48	.63	.78	44.5	13.0	5.18	.49	.64	.80
HS29-048 - CB29M-51 - CB28UH-048 COOLING CAPACITY - TXV Systems Only																										
63°F (17°C)	1300	615	46.0	13.5	3.62	.74	.87	.98	44.5	13.0	4.04	.75	.88	.99	42.5	12.5	4.53	.77	.90	1.00	40.5	11.9	5.09	.78	.92	1.00
	1450	685	47.0	13.8	3.64	.76	.90	1.00	45.0	13.2	4.06	.78	.92	1.00	43.5	12.7	4.55	.79	.93	1.00	41.5	12.2	5.10	.80	.95	1.00
	1600	755	47.5	13.9	3.67	.79	.93	1.00	46.0	13.5	4.08	.80	.95	1.00	44.5	13.0	4.56	.81	.96	1.00	42.5	12.5	5.12	.83	.98	1.00
67°F (19°C)	1300	615	48.0	14.1	3.68	.60	.72	.84	46.5	13.6	4.10	.61	.73	.85	45.0	13.2	4.58	.61	.74	.87	43.0	12.6	5.14	.62	.76	.89
	1450	685	49.0	14.4	3.71	.61	.74	.87	47.5	13.9	4.12	.62	.75	.89	46.0	13.5	4.60	.63	.77	.90	44.0	12.9	5.16	.64	.78	.92
	1600	755	50.0	14.7	3.73	.63	.77	.90	48.5	14.2	4.15	.64	.78	.92	46.5	13.6	4.62	.65	.79	.94	44.5	13.0	5.17	.66	.81	.96
71°F (22°C)	1300	615	50.5	14.8	3.74	.47	.59	.70	49.0	14.4	4.16	.47	.59	.71	47.0	13.8	4.64	.47	.60	.72	45.0	13.2	5.19	.48	.61	.74
	1450	685	51.5	15.1	3.77	.47	.60	.72	50.0	14.7	4.18	.48	.61	.73	48.0	14.1	4.66	.48	.61	.74	46.0	13.5	5.21	.48	.62	.76
	1600	755	52.5	15.4	3.79	.48	.61	.74	51.0	14.9	4.20	.49	.62	.76	49.0	14.4	4.69	.49	.63	.77	47.0	13.8	5.23	.49	.64	.79
HS29-048 - CB29M-65 - CB28UH-060 COOLING CAPACITY - TXV Systems Only																										
63°F (17°C)	1400	660	46.5	13.6	3.64	.76	.89	1.00	45.0	13.2	4.05	.77	.90	1.00	43.0	12.6	4.54	.78	.92	1.00	41.0	12.0	5.10	.79	.94	1.00
	1600	755	47.5	13.9	3.66	.79	.93	1.00	46.0	13.5	4.08	.80	.95	1.00	44.5	13.0	4.56	.81	.96	1.00	42.5	12.5	5.12	.83	.98	1.00
	1800	850	48.5	14.2	3.69	.81	.96	1.00	47.0	13.8	4.11	.83	.98	1.00	45.5	13.3	4.59	.84	.99	1.00	43.5	12.7	5.15	.86	1.00	1.00
67°F (19°C)	1400	660	49.0	14.4	3.70	.61	.73	.86	47.5	13.9	4.11	.61	.74	.87	45.5	13.3	4.60	.62	.76	.89	43.5	12.7	5.16	.63	.77	.91
	1600	755	50.0	14.7	3.73	.62	.76	.90	48.5	14.2	4.14	.63	.78	.92	46.5	13.6	4.62	.64	.79	.94	44.5	13.0	5.17	.65	.81	.96
	1800	850	51.0	14.9	3.76	.64	.79	.94	49.5	14.5	4.17	.65	.81	.95	47.5	13.9	4.64	.66	.82	.97	45.5	13.3	5.19	.67	.84	.99
71°F (22°C)	1400	660	51.5	15.1	3.76	.47	.59	.71	49.5	14.5	4.17	.47	.60	.72	47.5	13.9	4.65	.48	.61	.74	45.5	13.3	5.20	.48	.62	.75
	1600	755	52.5	15.4	3.79	.48	.61	.74	50.5	14.8	4.20	.48	.62	.76	49.0	14.4	4.68	.49	.63	.77	47.0	13.8	5.23	.49	.64	.79
	1800	850	53.5	15.7	3.82	.49	.63	.77	52.0	15.2	4.23	.49	.64	.79	50.0	14.7	4.71	.50	.65	.80	47.5	13.9	5.26	.50	.67	.82
HS29-048 - CB30M-51 - CB30U-51 COOLING CAPACITY - TXV Systems Only																										
63°F (17°C)	1400	660	47.5	13.9	3.66	.76	.90	1.00	45.5	13.3	4.08	.77	.92	1.00	44.0	12.9	4.56	.79	.94	1.00	42.0	12.3	5.11	.80	.96	1.00
	1600	755	48.5	14.2	3.69	.79	.94	1.00	47.0	13.8	4.10	.81	.96	1.00	45.0	13.2	4.58	.82	.98	1.00	43.0	12.6	5.14	.84	.99	1.00
	1800	850	49.5	14.5	3.72	.83	.98	1.00	48.0	14.1	4.13	.84	.99	1.00	46.0	13.5	4.61	.86	1.00	1.00	44.5	13.0	5.17	.88	1.00	1.00
67°F (19°C)	1400	660	50.0	14.7	3.72	.61	.74	.87	48.0	14.1	4.14	.61	.75	.89	46.5	13.6	4.62	.62	.76	.90	44.5	13.0	5.17	.63	.78	.93
	1600	755	51.0	14.9	3.76	.63	.77	.91	49.5	14.5	4.17	.64	.79	.93	47.5	13.9	4.64	.64	.80	.95	45.5	13.3	5.19	.66	.82	.97
	1800	850	52.0	15.2	3.78	.65	.80	.96	50.5	14.8	4.19	.66	.82	.97	48.5	14.2	4.67	.67	.84	.99	46.0	13.5	5.22	.68	.86	1.00
71°F (22°C)	1400	660	52.5	15.4	3.79	.47	.59	.72	50.5	14.8	4.20	.47	.60	.73	48.5	14.2	4.68	.47	.61	.74	46.5	13.6	5.23	.48	.62	.76
	1600	755	53.5	15.7	3.82	.48	.61	.75	51.5	15.1	4.23	.48	.62	.76	50.0	14.7	4.70	.48	.63	.78	47.5	13.9	5.25	.49	.64	.80
	1800	850	54.5	16.0	3.85	.49	.64	.79	53.0	15.5	4.26	.49	.65	.80	50.5	14.8	4.73	.49	.66	.82	48.5	14.2	5.28	.50	.67	.84

NOTE - For Temperatures and Capacities not shown in tables, see bulletin - Cooling Unit Rating Table Correction Factor Data in Miscellaneous Engineering Data section.

Entering Wet Bulb Temperature	Total Air Volume		Outdoor Air Temperature Entering Outdoor Coil																							
			85°F (29°C)						95°F (35°C)						105°F (41°C)						115°F (46°C)					
			Total Cooling Capacity		Comp Motor kW Input	Sensible To Total Ratio (S/T) Dry Bulb			Total Cooling Capacity		Comp Motor kW Input	Sensible To Total Ratio (S/T) Dry Bulb			Total Cooling Capacity		Comp Motor kW Input	Sensible To Total Ratio (S/T) Dry Bulb			Total Cooling Capacity		Comp Motor kW Input	Sensible To Total Ratio (S/T) Dry Bulb		
	cfm	L/s	kBtuh	kW		75°F 24°C	80°F 27°C	85°F 29°C	kBtuh	kW		75°F 24°C	80°F 27°C	85°F 29°C	kBtuh	kW		75°F 24°C	80°F 27°C	85°F 29°C	kBtuh	kW		75°F 24°C	80°F 27°C	85°F 29°C
HS29-048 - CB31MV-51 COOLING CAPACITY - TXV Systems Only																										
63°F (17°C)	1425	675	47.5	13.9	3.66	.76	.90	1.00	46.0	13.5	4.08	.78	.92	1.00	44.0	12.9	4.56	.79	.94	1.00	42.0	12.3	5.12	.81	.96	1.00
	1625	765	48.5	14.2	3.69	.80	.95	1.00	47.0	13.8	4.10	.81	.96	1.00	45.0	13.2	4.58	.83	.98	1.00	43.0	12.6	5.14	.84	1.00	1.00
	1805	850	49.5	14.5	3.72	.83	.98	1.00	48.0	14.1	4.13	.84	.99	1.00	46.0	13.5	4.61	.86	1.00	1.00	44.5	13.0	5.17	.88	1.00	1.00
67°F (19°C)	1425	675	50.0	14.7	3.73	.61	.74	.87	48.5	14.2	4.14	.61	.75	.89	46.5	13.6	4.62	.62	.77	.91	44.5	13.0	5.17	.63	.78	.93
	1625	765	51.0	14.9	3.76	.63	.78	.92	49.5	14.5	4.17	.64	.79	.94	47.5	13.9	4.65	.65	.80	.96	45.5	13.3	5.20	.66	.82	.98
	1805	850	52.5	15.4	3.78	.65	.81	.96	50.5	14.8	4.19	.66	.82	.97	48.5	14.2	4.67	.67	.84	.99	46.0	13.5	5.22	.68	.86	1.00
71°F (22°C)	1425	675	52.5	15.4	3.79	.47	.59	.72	50.5	14.8	4.20	.47	.60	.73	48.5	14.2	4.68	.47	.61	.75	46.5	13.6	5.23	.48	.62	.76
	1625	765	54.0	15.8	3.83	.48	.62	.75	52.0	15.2	4.24	.48	.63	.77	50.0	14.7	4.71	.48	.64	.78	48.0	14.1	5.26	.49	.65	.80
	1805	850	54.5	16.0	3.85	.49	.64	.79	53.0	15.5	4.26	.49	.65	.80	51.0	14.9	4.73	.50	.66	.82	48.5	14.2	5.28	.50	.67	.84
HS29-048 - CB30M-65 - CB30U-65 COOLING CAPACITY - TXV Systems Only																										
63°F (17°C)	1400	660	48.0	14.1	3.68	.76	.89	1.00	46.5	13.6	4.10	.77	.91	1.00	44.5	13.0	4.57	.78	.92	1.00	43.0	12.6	5.13	.80	.95	1.00
	1600	755	49.5	14.5	3.71	.79	.93	1.00	47.5	13.9	4.12	.80	.95	1.00	46.0	13.5	4.61	.81	.97	1.00	44.0	12.9	5.16	.83	.98	1.00
	1800	850	50.5	14.8	3.74	.82	.97	1.00	49.0	14.4	4.15	.83	.98	1.00	47.0	13.8	4.63	.85	.99	1.00	45.0	13.2	5.18	.87	1.00	1.00
67°F (19°C)	1400	660	50.5	14.8	3.74	.61	.74	.86	49.0	14.4	4.16	.61	.75	.88	47.0	13.8	4.63	.62	.76	.89	45.0	13.2	5.18	.63	.77	.91
	1600	755	51.5	15.1	3.77	.62	.77	.90	50.0	14.7	4.18	.63	.78	.92	48.0	14.1	4.66	.64	.79	.94	46.0	13.5	5.21	.65	.81	.96
	1800	850	53.0	15.5	3.80	.64	.80	.94	51.0	14.9	4.21	.65	.81	.96	49.0	14.4	4.69	.66	.83	.98	47.0	13.8	5.24	.68	.85	.99
71°F (22°C)	1400	660	53.0	15.5	3.81	.47	.59	.71	51.5	15.1	4.22	.47	.60	.73	49.5	14.5	4.70	.48	.61	.74	47.0	13.8	5.24	.48	.62	.75
	1600	755	54.5	16.0	3.84	.48	.61	.75	52.5	15.4	4.25	.48	.62	.76	50.5	14.8	4.73	.48	.63	.77	48.5	14.2	5.27	.49	.64	.79
	1800	850	55.5	16.3	3.87	.49	.63	.78	53.5	15.7	4.28	.49	.64	.79	51.5	15.1	4.76	.50	.65	.81	49.5	14.5	5.30	.50	.67	.83
HS29-048 - CB31MV-65 COOLING CAPACITY - TXV Systems Only																										
63°F (17°C)	1425	675	48.5	14.2	3.68	.76	.89	1.00	46.5	13.6	4.10	.77	.91	1.00	45.0	13.2	4.58	.78	.93	1.00	43.0	12.6	5.14	.80	.95	1.00
	1625	765	49.5	14.5	3.71	.79	.94	1.00	48.0	14.1	4.13	.80	.95	1.00	46.0	13.5	4.61	.82	.97	1.00	44.0	12.9	5.16	.84	.99	1.00
	1805	850	50.5	14.8	3.74	.82	.97	1.00	49.0	14.4	4.15	.83	.98	1.00	47.0	13.8	4.63	.85	1.00	1.00	45.0	13.2	5.18	.87	1.00	1.00
67°F (19°C)	1425	675	50.5	14.8	3.75	.61	.74	.86	49.0	14.4	4.15	.61	.75	.88	47.0	13.8	4.64	.62	.76	.90	45.0	13.2	5.19	.63	.78	.92
	1625	765	52.0	15.2	3.78	.63	.77	.91	50.0	14.7	4.19	.63	.78	.92	48.0	14.1	4.67	.64	.80	.94	46.0	13.5	5.22	.65	.82	.96
	1805	850	53.0	15.5	3.80	.65	.80	.94	51.0	14.9	4.21	.65	.81	.96	49.0	14.4	4.69	.66	.83	.98	47.0	13.8	5.24	.68	.85	.99
71°F (22°C)	1425	675	53.0	15.5	3.81	.47	.59	.72	51.5	15.1	4.22	.47	.60	.73	49.5	14.5	4.70	.47	.61	.74	47.5	13.9	5.24	.48	.62	.75
	1625	765	54.5	16.0	3.85	.48	.61	.75	52.5	15.4	4.25	.48	.62	.76	50.5	14.8	4.73	.48	.63	.78	48.5	14.2	5.27	.49	.64	.79
	1805	850	55.5	16.3	3.87	.49	.64	.78	53.5	15.7	4.28	.49	.64	.79	51.5	15.1	4.76	.50	.66	.81	49.5	14.5	5.30	.50	.67	.83
HS29-048 - CVP10-51/EC10Q4 COOLING CAPACITY - TXV Systems Only																										
63°F (17°C)	1400	660	46.0	13.5	3.62	.76	.89	.99	44.0	12.9	4.04	.77	.91	1.00	42.5	12.5	4.53	.78	.92	1.00	40.5	11.9	5.09	.79	.95	1.00
	1600	755	47.0	13.8	3.65	.79	.93	1.00	45.0	13.2	4.06	.80	.95	1.00	43.5	12.7	4.55	.81	.97	1.00	41.5	12.2	5.11	.83	.98	1.00
	1800	850	47.5	13.9	3.67	.82	.97	1.00	46.0	13.5	4.08	.83	.98	1.00	44.5	13.0	4.57	.85	.99	1.00	43.0	12.6	5.14	.87	1.00	1.00
67°F (19°C)	1400	660	48.5	14.2	3.69	.60	.73	.86	47.0	13.8	4.10	.61	.74	.88	45.0	13.2	4.59	.62	.76	.89	43.0	12.6	5.15	.63	.77	.91
	1600	755	49.5	14.5	3.72	.62	.76	.90	48.0	14.1	4.13	.63	.77	.92	46.0	13.5	4.61	.64	.79	.94	44.0	12.9	5.16	.65	.81	.96
	1800	850	50.5	14.8	3.74	.64	.79	.94	49.0	14.4	4.15	.65	.81	.96	47.0	13.8	4.63	.66	.82	.98	45.0	13.2	5.18	.67	.85	.99
71°F (22°C)	1400	660	51.0	14.9	3.76	.46	.59	.71	49.5	14.5	4.17	.46	.60	.72	47.5	13.9	4.65	.47	.61	.73	46.0	13.5	5.21	.47	.61	.75
	1600	755	52.5	15.4	3.79	.47	.61	.74	50.5	14.8	4.20	.48	.62	.75	49.0	14.4	4.68	.48	.63	.77	46.5	13.6	5.22	.49	.64	.79
	1800	850	53.5	15.7	3.81	.48	.63	.77	51.5	15.1	4.23	.49	.64	.79	49.5	14.5	4.70	.49	.65	.80	47.5	13.9	5.25	.50	.66	.82
HS29-048 - CVP10-65/EC10Q5 COOLING CAPACITY - TXV Systems Only																										
63°F (17°C)	1400	660	47.5	13.9	3.67	.77	.90	1.00	46.0	13.5	4.08	.78	.91	1.00	44.5	13.0	4.57	.79	.93	1.00	42.5	12.5	5.13	.81	.95	1.00
	1600	755	49.0	14.4	3.70	.80	.94	1.00	47.5	13.9	4.11	.81	.96	1.00	45.5	13.3	4.60	.83	.97	1.00	44.0	12.9	5.15	.84	.99	1.00
	1800	850	50.0	14.7	3.73	.83	.98	1.00	48.5	14.2	4.15	.85	.99	1.00	46.5	13.6	4.63	.86	1.00	1.00	45.0	13.2	5.18	.88	1.00	1.00
67°F (19°C)	1400	660	50.5	14.8	3.73	.61	.74	.87	48.5	14.2	4.15	.62	.76	.89	46.5	13.6	4.62	.62	.77	.90	44.5	13.0	5.18	.63	.78	.92
	1600	755	51.5	15.1	3.76	.63	.78	.91	49.5	14.5	4.18	.64	.79	.93	48.0	14.1	4.65	.65	.80	.95	46.0	13.5	5.21	.66	.82	.97
	1800	850	52.5	15.4	3.79	.65	.81	.95	50.5	14.8	4.20	.66	.83	.97	48.5	14.2	4.68	.67	.84	.98	46.5	13.6	5.23	.68	.86	1.00
71°F (22°C)	1400	660	53.0	15.5	3.80	.47	.60	.72	51.0	14.9	4.22	.47	.60	.73	49.0	14.4	4.70	.48	.61	.74	47.0	13.8	5.24	.48	.62	.76
	1600	755	54.0	15.8	3.84	.48	.62	.75	52.5	15.4	4.25	.48	.63	.77	50.5	14.8	4.72	.49	.64	.78	48.0	14.1	5.27	.49	.65	.80
	1800	850	55.0	16.1	3.86	.49	.64	.79	53.0	15.5	4.27	.49	.65	.81	51.0	14.9	4.75	.50	.66	.82	49.0	14.4	5.29	.51	.67	.84
HS29-048 - C33-48B/C COOLING CAPACITY - RFC Systems Only																										
63°F (17°C)	1400	660	47.5	13.9	3.70	.74	.86	.98	46.0	13.5	4.14	.75	.88	.99	44.5	13.0	4.65	.76	.89	1.00	42.5	12.5	5.22	.77	.91	1.00
	1600	755	49.0	14.4	3.74	.76	.90	1.00	47.0	13.8	4.17	.78	.91	1.00	45.5	13.3	4.67	.79	.93	1.00	43.5	12.7	5.25	.80	.95	1.00
	1800	850	50.0	14.7	3.76	.79	.93	1.00	48.5	14.2	4.19	.80	.95	1.00	46.5	13.6	4.69	.81	.97	1.00	44.5	13.0	5.27	.83	.99	1.00
67°F (19°C)	1400	660	50.0	14.7	3.76	.60	.72	.83	48.5	14.2	4.20	.60	.73	.85	46.5	13.6	4.70	.61	.74	.86	45.0	13.2	5.28	.62	.75	.88
	1600	755	51.5	15.1	3.80	.61	.74	.87	49.5	14.5	4.22	.62	.75	.88	48.0	14.1	4.73	.63	.77	.90	46.0	13.5	5.29	.64	.78	.92
	1800	850	52.5	15.4	3.82	.63	.77	.90	50.5	14.8	4.25	.64	.78	.92	48.5	14.2	4.74	.64	.79	.94	46.5	13.6	5.32	.65	.81	.96
71°F (22°C)	1400	660	52.5	15.4	3.83	.47	.58	.69	51.0	14.9	4.26	.47	.59	.70	49.0	14.4	4.76	.47	.60	.71	47.0	13.8	5.33	.48	.60	.73
	1600	755	54.0	15.8	3.86	.47	.60	.72	52.0	15.2	4.29	.48	.61	.73	50.0	14.7	4.79	.48	.61	.75	48.0	14.1	5.35	.49	.62	.76
	1800	850	55.0	16.1	3.89	.48	.62	.75	53.0	15.5	4.32	.49	.62	.76	51.0	14.9	4.81	.49	.63	.77	49.0	14.4	5.37	.49	.64	.79
HS29-048 - C33-60D COOLING CAPACITY - RFC Systems Only																										
63°F (17°C)	1400	660	49.0	14.4	3.73	.76	.88	1.00	47.0	13.8	4.17	.76	.90	1.00	45.5	13.3	4.66	.77	.91	1.00	43.5	12.7	5.25	.79	.93	1.00
	1600	755	50.0	14.7	3.76	.78	.92	1.00	48.5	14.2	4.19	.79	.94	1.00	46.5	13.6	4.70	.80	.96	1.00	44.5	13.0	5.27	.82	.98	1.00
	1800	850	51.0	14.9	3.79	.81	.96	1.00	49.5	14.5	4.22	.82	.98	1.00	47.5	13.9	4.72	.84	.99	1.00	45.5	13.3	5.29	.86	1.00	1.00
67°F (19°C)	1400	660	51.5	15.1	3.79	.60	.73	.85	49.5	14.5	4.22	.61	.74	.87	47.5	13.9	4.72	.62	.75	.88	45.5	13.3	5.29	.63	.77	.90
	1600	755	52.5	15.4	3.83	.63	.76	.89	51.0	14.9	4.25	.63	.77	.91	49.0	14.4	4.75	.64	.78	.92	47.0	13.8	5.33	.65	.80	.95
	1800	850	53.5	15.7	3.85	.64	.79	.93	52.0	15.2	4.28	.65	.80	.95	50.0	14.7	4.78	.66	.82	.97	47.5	13.9	5.35	.67	.84	.99
71°F (22°C)	1400	660	54.0	15.8	3.86	.47	.59	.71	52.0	15.2	4.29	.47	.60	.72	50.0	14.7	4.79	.48	.61	.73	48.0	14.1	5.36	.48	.62	.75
	1600	755	55.0	16.1	3.90	.48	.61	.74	53.5	15.7	4.33	.48	.62	.75	51.5	15.1	4.82	.48	.63	.76	49.5	14.5	5.39	.49	.64	.78
	1800	850	56.5	16.6	3.93	.49	.63	.77	54.5	16.0	4.35	.49	.64	.78	52.5	15.4	4.84	.49	.65	.80	50.0	14.7	5.41	.50	.66	.82

NOTE - For Temperatures and Capacities not shown in tables, see bulletin - Cooling Unit Rating Table Correction Factor Data in Miscellaneous Engineering Data section.

Entering Wet Bulb Temperature	Total Air Volume		Outdoor Air Temperature Entering Outdoor Coil																							
			85°F (29°C)						95°F (35°C)						105°F (41°C)						115°F (46°C)					
			Total Cooling Capacity		Comp Motor kW Input	Sensible To Total Ratio (S/T) Dry Bulb			Total Cooling Capacity		Comp Motor kW Input	Sensible To Total Ratio (S/T) Dry Bulb			Total Cooling Capacity		Comp Motor kW Input	Sensible To Total Ratio (S/T) Dry Bulb			Total Cooling Capacity		Comp Motor kW Input	Sensible To Total Ratio (S/T) Dry Bulb		
	cfm	L/s	kBtuh	kW		75°F 24°C	80°F 27°C	85°F 29°C	kBtuh	kW		75°F 24°C	80°F 27°C	85°F 29°C	kBtuh	kW		75°F 24°C	80°F 27°C	85°F 29°C	kBtuh	kW		75°F 24°C	80°F 27°C	85°F 29°C
HS29-048 - C33-62D COOLING CAPACITY - RFC Systems Only																										
63°F (17°C)	1400	660	49.5	14.5	3.75	.75	.88	1.00	47.5	13.9	4.18	.76	.89	1.00	46.0	13.5	4.68	.77	.91	1.00	44.0	12.9	5.26	.79	.93	1.00
	1600	755	50.5	14.8	3.78	.78	.92	1.00	49.0	14.4	4.21	.79	.93	1.00	47.0	13.8	4.71	.80	.95	1.00	45.0	13.2	5.28	.82	.98	1.00
	1800	850	52.0	15.2	3.81	.80	.96	1.00	50.0	14.7	4.23	.82	.97	1.00	48.0	14.1	4.73	.84	.99	1.00	46.0	13.5	5.30	.85	1.00	1.00
67°F (19°C)	1400	660	51.5	15.1	3.80	.61	.73	.85	50.0	14.7	4.24	.61	.74	.86	48.0	14.1	4.73	.62	.75	.88	46.0	13.5	5.30	.63	.76	.90
	1600	755	53.0	15.5	3.84	.62	.76	.89	51.5	15.1	4.26	.63	.77	.90	49.5	14.5	4.76	.64	.78	.92	47.5	13.9	5.34	.65	.80	.95
	1800	850	54.5	16.0	3.87	.64	.78	.93	52.5	15.4	4.30	.65	.80	.94	50.5	14.8	4.79	.66	.81	.97	48.5	14.2	5.36	.67	.83	.99
71°F (22°C)	1400	660	54.5	16.0	3.87	.47	.59	.71	52.5	15.4	4.30	.47	.60	.72	50.5	14.8	4.80	.48	.61	.73	48.5	14.2	5.36	.48	.61	.74
	1600	755	55.5	16.3	3.91	.48	.62	.73	53.5	15.7	4.33	.48	.61	.75	51.5	15.1	4.82	.49	.62	.76	49.5	14.5	5.39	.49	.63	.78
	1800	850	56.5	16.6	3.94	.49	.63	.76	54.5	16.0	4.35	.49	.64	.78	52.5	15.4	4.85	.50	.65	.79	50.5	14.8	5.42	.50	.66	.81
HS29-048 - CR26-48N/W-F COOLING CAPACITY - RFC Systems Only																										
63°F (17°C)	1400	660	46.5	13.6	3.68	.74	.87	.99	45.0	13.2	4.11	.75	.88	.99	43.0	12.6	4.62	.77	.90	1.00	41.5	12.2	5.21	.78	.92	1.00
	1600	755	47.5	13.9	3.70	.77	.90	1.00	46.0	13.5	4.14	.78	.92	1.00	44.0	12.9	4.64	.79	.94	1.00	42.5	12.5	5.22	.81	.96	1.00
	1800	850	48.5	14.2	3.72	.79	.94	1.00	46.5	13.6	4.16	.80	.96	1.00	45.0	13.2	4.66	.82	.97	1.00	43.0	12.6	5.24	.84	.99	1.00
67°F (19°C)	1400	660	49.0	14.4	3.73	.60	.72	.84	47.5	13.9	4.17	.61	.73	.85	45.5	13.3	4.67	.61	.74	.87	43.5	12.7	5.25	.62	.76	.89
	1600	755	50.0	14.7	3.76	.62	.75	.87	48.5	14.2	4.19	.63	.76	.89	46.5	13.6	4.70	.63	.77	.91	44.5	13.0	5.28	.64	.79	.93
	1800	850	51.0	14.9	3.79	.63	.77	.91	49.5	14.5	4.22	.64	.78	.92	47.5	13.9	4.72	.65	.80	.95	45.5	13.3	5.29	.66	.82	.97
71°F (22°C)	1400	660	51.0	14.9	3.79	.46	.59	.70	49.5	14.5	4.22	.47	.60	.71	48.0	14.1	4.72	.47	.60	.72	46.0	13.5	5.30	.47	.61	.73
	1600	755	52.5	15.4	3.82	.48	.61	.73	51.0	14.9	4.25	.48	.61	.74	49.0	14.4	4.75	.48	.62	.75	47.0	13.8	5.32	.49	.63	.77
	1800	850	53.5	15.7	3.85	.48	.62	.75	52.0	15.2	4.28	.49	.63	.76	50.0	14.7	4.78	.49	.64	.78	47.5	13.9	5.34	.50	.65	.79
HS29-048 - CR26-60N/W-F COOLING CAPACITY - RFC Systems Only																										
63°F (17°C)	1400	660	48.0	14.1	3.71	.76	.89	.99	46.0	13.5	4.14	.77	.91	1.00	44.5	13.0	4.65	.78	.93	1.00	42.5	12.5	5.23	.80	.95	1.00
	1600	755	49.0	14.4	3.74	.79	.93	1.00	47.5	13.9	4.17	.80	.95	1.00	45.5	13.3	4.67	.81	.97	1.00	43.5	12.7	5.24	.83	.98	1.00
	1800	850	50.0	14.7	3.76	.81	.97	1.00	48.0	14.1	4.19	.83	.98	1.00	46.5	13.6	4.69	.84	.99	1.00	44.5	13.0	5.28	.86	1.00	1.00
67°F (19°C)	1400	660	50.5	14.8	3.77	.61	.74	.86	48.5	14.2	4.20	.62	.75	.88	47.0	13.8	4.70	.62	.76	.90	45.0	13.2	5.28	.63	.78	.92
	1600	755	51.5	15.1	3.80	.63	.77	.90	50.0	14.7	4.23	.64	.78	.92	48.0	14.1	4.72	.65	.79	.94	46.0	13.5	5.29	.66	.81	.96
	1800	850	52.5	15.4	3.83	.65	.79	.94	50.5	14.8	4.25	.65	.81	.96	48.5	14.2	4.75	.66	.82	.97	46.5	13.6	5.32	.67	.84	.99
71°F (22°C)	1400	660	52.5	15.4	3.83	.46	.60	.71	51.0	14.9	4.26	.47	.60	.73	49.0	14.4	4.76	.47	.61	.74	47.0	13.8	5.33	.48	.62	.75
	1600	755	54.0	15.8	3.86	.47	.62	.74	52.0	15.2	4.29	.48	.62	.76	50.0	14.7	4.79	.48	.63	.77	48.0	14.1	5.35	.49	.64	.79
	1800	850	55.0	16.1	3.89	.49	.63	.78	53.0	15.5	4.32	.49	.64	.79	51.0	14.9	4.81	.49	.65	.80	49.0	14.4	5.38	.50	.67	.82
HS29-048 - CH23-51 COOLING CAPACITY - RFC Systems Only																										
63°F (17°C)	1400	660	47.0	13.8	3.69	.75	.88	.99	45.5	13.3	4.12	.76	.89	1.00	43.5	12.7	4.63	.77	.91	1.00	41.5	12.2	5.21	.79	.93	1.00
	1600	755	48.0	14.1	3.71	.78	.92	1.00	46.5	13.6	4.15	.79	.93	1.00	44.5	13.0	4.65	.80	.95	1.00	42.5	12.5	5.23	.82	.97	1.00
	1800	850	49.0	14.4	3.74	.80	.95	1.00	47.5	13.9	4.17	.81	.96	1.00	45.5	13.3	4.67	.83	.98	1.00	43.5	12.7	5.26	.85	.99	1.00
67°F (19°C)	1400	660	49.5	14.5	3.75	.60	.73	.85	48.0	14.1	4.18	.61	.74	.86	46.0	13.5	4.68	.61	.75	.88	44.0	12.9	5.26	.62	.76	.90
	1600	755	50.5	14.8	3.78	.62	.75	.89	49.0	14.4	4.21	.63	.77	.90	47.0	13.8	4.70	.63	.78	.92	45.0	13.2	5.28	.64	.80	.94
	1800	850	51.5	15.1	3.81	.63	.78	.92	50.0	14.7	4.23	.64	.79	.94	48.0	14.1	4.72	.65	.81	.96	46.0	13.5	5.30	.66	.83	.98
71°F (22°C)	1400	660	52.0	15.2	3.81	.46	.59	.70	50.0	14.7	4.24	.46	.59	.71	48.5	14.2	4.73	.47	.60	.73	46.0	13.5	5.31	.47	.61	.74
	1600	755	53.0	15.5	3.84	.47	.60	.73	51.5	15.1	4.27	.47	.61	.74	49.5	14.5	4.76	.48	.62	.76	47.5	13.9	5.33	.48	.63	.77
	1800	850	54.0	15.8	3.87	.48	.62	.76	52.5	15.4	4.29	.48	.63	.78	50.5	14.8	4.78	.49	.64	.79	48.0	14.1	5.36	.49	.65	.81
HS29-048 - CH33-44/48B-2F COOLING CAPACITY - RFC Systems Only																										
63°F (17°C)	1400	660	47.5	13.9	3.71	.74	.87	1.00	46.0	13.5	4.14	.75	.89	1.00	44.5	13.0	4.64	.77	.91	1.00	42.5	12.5	5.23	.78	.93	1.00
	1600	755	49.0	14.4	3.74	.77	.91	1.00	47.0	13.8	4.16	.79	.93	1.00	45.5	13.3	4.67	.80	.95	1.00	43.5	12.7	5.24	.81	.97	1.00
	1800	850	50.0	14.7	3.76	.80	.95	1.00	48.0	14.1	4.19	.81	.97	1.00	46.0	13.5	4.69	.83	.99	1.00	44.0	12.9	5.26	.85	1.00	1.00
67°F (19°C)	1400	660	50.0	14.7	3.77	.60	.72	.84	48.5	14.2	4.20	.61	.73	.86	46.5	13.6	4.70	.61	.74	.88	44.5	13.0	5.28	.62	.76	.90
	1600	755	51.5	15.1	3.80	.62	.75	.88	49.5	14.5	4.23	.62	.76	.90	48.0	14.1	4.73	.63	.78	.92	45.5	13.3	5.29	.64	.79	.94
	1800	850	52.5	15.4	3.82	.63	.78	.92	50.5	14.8	4.25	.64	.79	.94	48.5	14.2	4.74	.65	.81	.96	46.5	13.6	5.32	.66	.83	.99
71°F (22°C)	1400	660	52.5	15.4	3.83	.47	.58	.70	51.0	14.9	4.26	.47	.59	.71	49.0	14.4	4.76	.47	.60	.72	47.0	13.8	5.33	.47	.61	.74
	1600	755	54.0	15.8	3.87	.47	.60	.73	52.0	15.2	4.29	.47	.61	.74	50.0	14.7	4.78	.48	.62	.75	48.0	14.1	5.35	.48	.63	.77
	1800	850	55.0	16.1	3.89	.48	.62	.76	53.0	15.5	4.32	.49	.63	.77	51.0	14.9	4.81	.49	.64	.79	49.0	14.4	5.37	.49	.65	.80
HS29-048 - CH23-65 COOLING CAPACITY - RFC Systems Only																										
63°F (17°C)	1400	660	47.5	13.9	3.70	.75	.88	.99	45.5	13.3	4.13	.76	.90	1.00	44.0	12.9	4.64	.77	.92	1.00	42.0	12.3	5.21	.79	.94	1.00
	1600	755	48.5	14.2	3.73	.78	.92	1.00	47.0	13.8	4.16	.79	.94	1.00	45.0	13.2	4.66	.81	.95	1.00	43.0	12.6	5.24	.82	.98	1.00
	1800	850	49.5	14.5	3.75	.81	.96	1.00	48.0	14.1	4.18	.82	.97	1.00	46.0	13.5	4.68	.84	.99	1.00	44.0	12.9	5.27	.86	1.00	1.00
67°F (19°C)	1400	660	50.0	14.7	3.76	.60	.73	.85	48.0	14.1	4.19	.61	.74	.87	46.5	13.6	4.69	.62	.75	.88	44.5	13.0	5.26	.63	.77	.91
	1600	755	51.0	14.9	3.79	.62	.76	.89	49.5	14.5	4.22	.63	.77	.91	47.5	13.9	4.71	.64	.78	.93	45.5	13.3	5.29	.65	.80	.95
	1800	850	52.0	15.2	3.82	.64	.79	.93	50.5	14.8	4.24	.64	.80	.95	48.5	14.2	4.74	.65	.82	.97	46.5	13.6	5.31	.67	.84	.98
71°F (22°C)	1400	660	52.5	15.4	3.82	.46	.59	.71	50.5	14.8	4.25	.47	.60	.72	48.5	14.2	4.74	.47	.60	.73	46.5	13.6	5.33	.47	.61	.75
	1600	755	53.5	15.7	3.85	.47	.61	.74	52.0	15.2	4.28	.47	.62	.75	50.0	14.7	4.78	.47	.62	.76	48.0	14.1	5.34	.48	.64	.78
	1800	850	54.5	16.0	3.88	.48	.63	.77	53.0	15.5	4.31	.48	.64	.78	51.0	14.9	4.80	.49	.64	.80	48.5	14.2	5.37	.49	.66	.82
HS29-048 - CH33-48C-2F COOLING CAPACITY - RFC Systems Only																										
63°F (17°C)	1400	660	48.5	14.2	3.72	.74	.87	.99	46.5	13.6	4.15	.75	.88	1.00	45.0	13.2	4.66	.77	.90	1.00	43.0	12.6	5.23	.78	.92	1.00
	1600	755	49.5	14.5	3.75	.77	.91	1.00	48.0	14.1	4.18	.78	.92	1.00	46.0	13.5	4.68	.79	.94	1.00	44.0	12.9	5.26	.81	.97	1.00
	1800	850	50.5	14.8	3.78	.79	.94	1.00	49.0	14.4	4.21	.81	.96	1.00	47.0	13.8	4.70	.82	.98	1.00	45.0	13.2	5.29	.84	1.00	1.00
67°F (19°C)	1400	660	51.0	14.9	3.79	.60	.72	.84	49.0	14.4	4.22	.61	.73	.85	47.5	13.9	4.71	.61	.74	.87	45.5	13.3	5.29	.62	.76	.89
	1600	755	52.0	15.2	3.81	.62	.75	.88	50.5	14.8	4.25	.62	.76	.89	48.5	14.2	4.74	.63	.77	.91	46.5	13.6	5.31	.64	.79	.93
	1800	850	53.0	15.5	3.84	.63	.77	.91	51.5	15.1	4.26	.64	.79	.93	49.5	14.5	4.76	.65	.80	.95	47.0	13.8	5.33	.66	.82	.97
71°F (22°C)	1400	660	53.5	15.7	3.84	.47	.59	.70	51.5	15.1	4.27	.47	.59	.71	49.5	14.5	4.77	.47	.60	.72	47.5	13.9	5.34	.48	.61	.73
	1600	755	54.5	16.0	3.88	.47	.60	.73	53.0	15.5	4.31	.48	.61	.74	51.0	14.9	4.80	.48	.62	.75	48.5	14.2	5.37	.48	.63	.77
	1800	850	55.5	16.3	3.91	.48	.62	.75	54.0	15.8	4.34	.49	.63	.77	52.0	15.2	4.82	.49	.64	.78	49.5	14.5	5.40	.49	.65	.80

NOTE - For Temperatures and Capacities not shown in tables, see bulletin - Cooling Unit Rating Table Correction Factor Data in Miscellaneous Engineering Data section.

Entering Wet Bulb Temperature	Total Air Volume		Outdoor Air Temperature Entering Outdoor Coil																							
			85°F (29°C)						95°F (35°C)						105°F (41°C)						115°F (46°C)					
			Total Cooling Capacity		Comp Motor kW Input	Sensible To Total Ratio (S/T) Dry Bulb			Total Cooling Capacity		Comp Motor kW Input	Sensible To Total Ratio (S/T) Dry Bulb			Total Cooling Capacity		Comp Motor kW Input	Sensible To Total Ratio (S/T) Dry Bulb			Total Cooling Capacity		Comp Motor kW Input	Sensible To Total Ratio (S/T) Dry Bulb		
	cfm	L/s	kBtuh	kW		75°F 24°C	80°F 27°C	85°F 29°C	kBtuh	kW		75°F 24°C	80°F 27°C	85°F 29°C	kBtuh	kW		75°F 24°C	80°F 27°C	85°F 29°C	kBtuh	kW		75°F 24°C	80°F 27°C	85°F 29°C
HS29-048 - CH33-60D-2F COOLING CAPACITY - RFC Systems Only																										
63°F (17°C)	1400	660	48.5	14.2	3.73	.75	.87	.99	47.0	13.8	4.15	.76	.89	1.00	45.0	13.2	4.66	.77	.90	1.00	43.0	12.6	5.24	.78	.92	1.00
	1600	755	49.5	14.5	3.76	.77	.91	1.00	48.0	14.1	4.18	.78	.93	1.00	46.0	13.5	4.69	.80	.95	1.00	44.0	12.9	5.27	.81	.97	1.00
	1800	850	51.0	14.9	3.78	.80	.95	1.00	49.0	14.4	4.21	.81	.97	1.00	47.0	13.8	4.71	.83	.98	1.00	45.0	13.2	5.29	.84	1.00	1.00
67°F (19°C)	1400	660	51.0	14.9	3.79	.60	.72	.84	49.5	14.5	4.22	.61	.73	.86	47.5	13.9	4.72	.61	.75	.87	45.5	13.3	5.29	.62	.76	.89
	1600	755	52.5	15.4	3.82	.62	.75	.88	50.5	14.8	4.25	.62	.76	.90	48.5	14.2	4.74	.63	.77	.92	46.5	13.6	5.32	.64	.79	.94
	1800	850	53.5	15.7	3.85	.63	.78	.92	51.5	15.1	4.27	.64	.79	.94	49.5	14.5	4.77	.65	.80	.96	47.5	13.9	5.34	.66	.82	.98
71°F (22°C)	1400	660	53.5	15.7	3.85	.47	.59	.70	52.0	15.2	4.28	.47	.59	.71	50.0	14.7	4.78	.47	.60	.72	48.0	14.1	5.34	.48	.61	.74
	1600	755	55.0	16.1	3.89	.48	.61	.73	53.0	15.5	4.32	.48	.61	.74	51.0	14.9	4.81	.48	.62	.75	49.0	14.4	5.37	.49	.63	.77
	1800	850	56.0	16.4	3.92	.48	.62	.76	54.0	15.8	4.34	.49	.63	.77	52.0	15.2	4.83	.49	.64	.79	50.0	14.7	5.40	.50	.65	.80

NOTE - For Temperatures and Capacities not shown in tables, see bulletin - Cooling Unit Rating Table Correction Factor Data in Miscellaneous Engineering Data section.

Entering Wet Bulb Temperature	Total Air Volume		Outdoor Air Temperature Entering Outdoor Coil																							
			85°F (29°C)						95°F (35°C)						105°F (41°C)						115°F (46°C)					
			Total Cooling Capacity		Comp Motor kW Input	Sensible To Total Ratio (S/T) Dry Bulb			Total Cooling Capacity		Comp Motor kW Input	Sensible To Total Ratio (S/T) Dry Bulb			Total Cooling Capacity		Comp Motor kW Input	Sensible To Total Ratio (S/T) Dry Bulb			Total Cooling Capacity		Comp Motor kW Input	Sensible To Total Ratio (S/T) Dry Bulb		
	cfm	L/s	kBtuh	kW		75°F 24°C	80°F 27°C	85°F 29°C	kBtuh	kW		75°F 24°C	80°F 27°C	85°F 29°C	kBtuh	kW		75°F 24°C	80°F 27°C	85°F 29°C	kBtuh	kW		75°F 24°C	80°F 27°C	85°F 29°C
HS29-048 - C33-44C COOLING CAPACITY - TXV Systems Only																										
63°F (17°C)	1200	565	44.3	13.0	3.64	.70	.83	.94	42.3	12.4	3.89	.72	.85	.96	40.1	11.8	4.17	.73	.87	.98	38.0	11.1	4.48	.75	.89	1.00
	1400	660	45.6	13.4	3.69	.73	.87	.98	43.5	12.7	3.95	.75	.89	1.00	41.3	12.1	4.23	.77	.91	1.00	39.1	11.5	4.55	.79	.94	1.00
	1600	755	46.7	13.7	3.73	.76	.91	1.00	44.5	13.0	3.99	.78	.93	1.00	42.3	12.4	4.29	.80	.95	1.00	40.1	11.8	4.62	.82	.98	1.00
67°F (19°C)	1200	565	47.3	13.9	3.75	.56	.68	.80	45.1	13.2	4.02	.56	.69	.81	42.9	12.6	4.32	.57	.70	.83	40.5	11.9	4.65	.58	.72	.86
	1400	660	48.5	14.2	3.79	.57	.71	.84	46.2	13.5	4.07	.58	.72	.86	43.8	12.8	4.38	.59	.74	.88	41.4	12.1	4.72	.60	.76	.91
	1600	755	49.4	14.5	3.82	.59	.74	.88	47.0	13.8	4.11	.60	.76	.90	44.6	13.1	4.42	.61	.78	.93	42.2	12.4	4.77	.63	.80	.95
71°F (22°C)	1200	565	50.5	14.8	3.86	.42	.54	.65	48.2	14.1	4.16	.42	.54	.66	45.8	13.4	4.49	.43	.55	.68	43.4	12.7	4.85	.43	.56	.69
	1400	660	51.7	15.2	3.90	.43	.56	.68	49.3	14.4	4.20	.43	.56	.70	46.8	13.7	4.54	.43	.57	.72	44.3	13.0	4.91	.44	.59	.74
	1600	755	52.6	15.4	3.93	.43	.58	.72	50.2	14.7	4.24	.44	.59	.73	47.6	14.0	4.59	.44	.60	.75	45.0	13.2	4.96	.45	.61	.78
HS29-048 - C33-48B/C COOLING CAPACITY - TXV and RFC Systems																										
63°F (17°C)	1400	660	46.7	13.7	3.60	.73	.86	.98	44.5	13.0	3.84	.74	.88	.99	42.3	12.4	4.11	.76	.90	1.00	40.1	11.8	4.41	.78	.93	1.00
	1600	755	47.7	14.0	3.64	.75	.90	1.00	45.5	13.3	3.88	.77	.92	1.00	43.3	12.7	4.16	.79	.94	1.00	41.1	12.0	4.47	.81	.96	1.00
	1800	850	48.6	14.2	3.67	.78	.93	1.00	46.4	13.6	3.92	.80	.95	1.00	44.2	13.0	4.20	.82	.97	1.00	41.9	12.3	4.53	.84	.99	1.00
67°F (19°C)	1400	660	49.7	14.6	3.70	.57	.70	.83	47.4	13.9	3.96	.58	.71	.85	45.1	13.2	4.25	.59	.73	.87	42.7	12.5	4.57	.60	.75	.90
	1600	755	50.7	14.9	3.73	.58	.73	.87	48.3	14.2	3.99	.59	.75	.89	45.8	13.4	4.29	.60	.77	.91	43.4	12.7	4.62	.62	.79	.94
	1800	850	51.4	15.1	3.76	.60	.76	.90	49.0	14.4	4.02	.61	.78	.93	46.5	13.6	4.33	.62	.80	.95	44.0	12.9	4.66	.64	.82	.97
71°F (22°C)	1400	660	53.1	15.6	3.81	.43	.55	.67	50.6	14.8	4.09	.43	.56	.69	48.2	14.1	4.41	.43	.57	.71	45.6	13.4	4.76	.44	.58	.73
	1600	755	54.0	15.8	3.84	.43	.57	.71	51.5	15.1	4.13	.43	.58	.72	48.9	14.3	4.45	.44	.59	.74	46.3	13.6	4.81	.44	.60	.76
	1800	850	54.7	16.0	3.86	.44	.59	.74	52.2	15.3	4.15	.44	.60	.75	49.5	14.5	4.48	.45	.61	.78	46.9	13.7	4.84	.45	.63	.80
HS29-048 - C33-50/60C - TXV Systems Only - CR26-48N/W-F - TXV and RFC Systems COOLING CAPACITY																										
63°F (17°C)	1400	660	46.4	13.6	3.74	.73	.87	.98	44.1	12.9	4.00	.75	.89	1.00	41.9	12.3	4.30	.76	.91	1.00	39.6	11.6	4.62	.78	.94	1.00
	1600	755	47.5	13.9	3.78	.76	.91	1.00	45.2	13.2	4.05	.78	.93	1.00	42.9	12.6	4.35	.80	.95	1.00	40.6	11.9	4.69	.82	.98	1.00
	1800	850	48.5	14.2	3.81	.79	.95	1.00	46.2	13.5	4.09	.81	.97	1.00	43.9	12.9	4.41	.83	.99	1.00	41.7	12.2	4.77	.86	1.00	1.00
67°F (19°C)	1400	660	49.4	14.5	3.84	.57	.70	.83	47.0	13.8	4.13	.58	.72	.86	44.6	13.1	4.45	.59	.74	.88	42.1	12.3	4.80	.60	.76	.90
	1600	755	50.3	14.7	3.88	.59	.74	.88	47.9	14.0	4.17	.60	.75	.90	45.4	13.3	4.49	.61	.77	.92	42.9	12.6	4.85	.62	.80	.95
	1800	850	51.1	15.0	3.90	.61	.77	.92	48.6	14.2	4.20	.62	.79	.94	46.1	13.5	4.53	.63	.81	.96	43.5	12.7	4.90	.65	.84	.99
71°F (22°C)	1400	660	52.7	15.4	3.96	.43	.55	.68	50.2	14.7	4.27	.43	.56	.69	47.6	14.0	4.62	.43	.57	.71	45.0	13.2	5.00	.44	.59	.73
	1600	755	53.6	15.7	3.99	.43	.57	.71	51.1	15.0	4.31	.44	.58	.73	48.5	14.2	4.66	.44	.60	.75	45.8	13.4	5.06	.45	.61	.77
	1800	850	54.4	15.9	4.01	.44	.59	.75	51.8	15.2	4.34	.44	.61	.77	49.1	14.4	4.70	.45	.62	.79	46.3	13.6	5.10	.46	.64	.81
HS29-048 - C33-60D COOLING CAPACITY - TXV and RFC Systems																										
63°F (17°C)	1400	660	45.8	13.4	3.66	.72	.86	.98	43.7	12.8	3.91	.74	.88	.99	41.5	12.2	4.19	.76	.90	1.00	39.2	11.5	4.50	.78	.93	1.00
	1600	755	46.9	13.7	3.70	.75	.90	1.00	44.7	13.1	3.95	.77	.92	1.00	42.4	12.4	4.24	.79	.94	1.00	40.2	11.8	4.56	.81	.96	1.00
	1800	850	47.8	14.0	3.73	.78	.93	1.00	45.6	13.4	3.99	.80	.95	1.00	43.3	12.7	4.29	.82	.97	1.00	41.1	12.0	4.63	.84	.99	1.00
67°F (19°C)	1400	660	48.9	14.3	3.77	.57	.70	.83	46.6	13.7	4.04	.57	.71	.85	44.2	13.0	4.34	.58	.73	.87	41.8	12.3	4.67	.60	.75	.89
	1600	755	49.8	14.6	3.80	.58	.73	.87	47.4	13.9	4.07	.59	.74	.89	45.0	13.2	4.38	.60	.76	.91	42.5	12.5	4.72	.62	.79	.94
	1800	850	50.6	14.8	3.82	.60	.76	.90	48.1	14.1	4.10	.61	.78	.93	45.6	13.4	4.42	.62	.80	.95	43.1	12.6	4.77	.64	.82	.97
71°F (22°C)	1400	660	52.2	15.3	3.88	.43	.55	.67	49.8	14.6	4.17	.43	.56	.69	47.3	13.9	4.51	.43	.57	.70	44.8	13.1	4.87	.44	.58	.72
	1600	755	53.1	15.6	3.91	.43	.57	.70	50.6	14.8	4.21	.43	.58	.72	48.1	14.1	4.55	.44	.59	.74	45.5	13.3	4.92	.44	.60	.76
	1800	850	53.8	15.8	3.93	.44	.59	.73	51.3	15.0	4.24	.44	.60	.75	48.7	14.3	4.58	.45	.61	.77	46.0	13.5	4.96	.45	.63	.80
HS29-048 - C33-62D - CH33-62D-2F - CH23-68 COOLING CAPACITY - TXV Systems Only																										
63°F (17°C)	1400	660	48.3	14.2	3.76	.72	.86	.98	46.0	13.5	4.03	.74	.88	1.00	43.6	12.8	4.33	.76	.91	1.00	41.2	12.1	4.66	.78	.93	1.00
	1600	755	49.5	14.5	3.80	.76	.90	1.00	47.0	13.8	4.08	.77	.93	1.00	44.6	13.1	4.39	.79	.95	1.00	42.2	12.4	4.73	.82	.97	1.00
	1800	850	50.5	14.8	3.84	.79	.94	1.00	48.0	14.1	4.12	.81	.96	1.00	45.6	13.4	4.44	.83	.98	1.00	43.2	12.7	4.80	.85	1.00	1.00
67°F (19°C)	1400	660	51.5	15.1	3.88	.57	.70	.83	49.0	14.4	4.16	.58	.71	.85	46.5	13.6	4.49	.59	.73	.87	43.9	12.9	4.85	.60	.75	.90
	1600	755	52.6	15.4	3.91	.59	.73	.87	50.0	14.7	4.21	.60	.75	.89	47.3	13.9	4.54	.61	.77	.92	44.7	13.1	4.90	.62	.79	.94
	1800	850	53.4	15.6	3.94	.60	.76	.91	50.8	14.9	4.24	.61	.78	.93	48.1	14.1	4.58	.63	.80	.96	45.4	13.3	4.95	.64	.83	.98
71°F (22°C)	1400	660	55.0	16.1	3.99	.43	.55	.67	52.4	15.4	4.31	.43	.56	.69	49.7	14.6	4.67	.43	.57	.71	47.0	13.8	5.06	.44	.58	.73
	1600	755	56.1	16.4	4.03	.43	.57	.71	53.4	15.6	4.35	.44	.58	.72	50.6	14.8	4.72	.44	.59	.74	47.8	14.0	5.12	.44	.61	.77
	1800	850	56.9	16.7	4.05	.44	.59	.74	54.1	15.9	4.39	.44	.60	.76	51.3	15.0	4.76	.45	.61	.78	48.4	14.2	5.16	.45	.63	.80
HS29-048 - CR26-60N/W-F COOLING CAPACITY - TXV and RFC Systems																										
63°F (17°C)	1400	660	46.9	13.7	3.73	.73	.86	.98	44.6	13.1	3.99	.74	.88	1.00	42.4	12.4	4.28	.76	.91	1.00	40.1	11.8	4.60	.78	.93	1.00
	1600	755	48.0	14.1	3.77	.76	.90	1.00	45.7	13.4	4.03	.77	.93	1.00	43.4	12.7	4.34	.79	.95	1.00	41.1	12.0	4.67	.82	.97	1.00
	1800	850	49.0	14.4	3.80	.79	.94	1.00	46.6	13.7	4.07	.81	.96	1.00	44.3	13.0	4.39	.83	.98	1.00	42.0	12.3	4.74	.85	1.00	1.00
67°F (19°C)	1400	660	50.0	14.7	3.83	.57	.70	.83	47.6	14.0	4.12	.58	.72	.85	45.1	13.2	4.43	.59	.73	.87	42.6	12.5	4.78	.60	.75	.90
	1600	755	51.0	14.9	3.87	.59	.73	.87	48.5	14.2	4.16	.60	.75	.89	45.9	13.5	4.48	.61	.77	.92	43.4	12.7	4.84	.62	.79	.94
	1800	850	51.7	15.2	3.89	.60	.76	.91	49.2	14.4	4.19	.62	.78	.93	46.6	13.7	4.52	.63	.80	.96	44.0	12.9	4.88	.64	.83	.98
71°F (22°C)	1400	660	53.3	15.6	3.95	.43	.55	.68	50.9	14.9	4.26	.43	.56	.69	48.3	14.2	4.61	.43	.57	.71	45.6	13.4	4.99	.44	.58	.73
	1600	755	54.3	15.9	3.98	.43	.57	.71	51.7	15.2	4.30	.44	.58	.73	49.1	14.4	4.65	.44	.59	.75	46.4	13.6	5.04	.45	.61	.77
	1800	850	55.1	16.1	4.01	.44	.59	.74	52.4	15.4	4.33	.44	.60	.76	49.7	14.6	4.69	.45	.62	.78	47.0	13.8	5.08	.45	.63	.81
HS29-048 - CH33-44/48B-2F- CH23-51 TXV and RFC Systems - CH33-48C-2F RFC Systems Only COOLING CAPACITY																										
63°F (17°C)	1400	660	46.2	13.5	3.66	.74	.87	.98	44.0	12.9	3.91	.75	.89	1.00	41.8	12.3	4.19	.77	.92	1.00	39.6	11.6	4.50	.79	.94	1.00
	1600	755	47.2	13.8	3.69	.77	.91	1.00	45.0	13.2	3.95	.78	.93	1.00	42.8	12.5	4.24	.80	.96	1.00	40.6	11.9	4.56	.83	.98	1.00
	1800	850	48.2	14.1	3.72	.80	.95	1.00	45.9	13.5	3.99	.82	.97	1.00	43.7	12.8	4.29	.84	.99	1.00	41.6	12.2	4.63	.86	1.00	1.00
67°F (19°C)	1400	660	49.0	14.4	3.75	.57	.71	.84	46.7	13.7	4.02	.58	.73	.86	44.3	13.0	4.32	.59	.74	.88	41.9	12.3	4.66	.60	.76	.91
	1600	755	49.9	14.6	3.79	.59	.74	.88	47.5	13.9	4.06	.60	.76	.90	45.1	13.2	4.37	.61	.78	.93	42.7	12.5	4.71	.63	.80	.95
	1800	850	50.7	14.9	3.81	.61	.78	.92	48.2	14.1	4.09	.62	.79	.94	45.8	13.4	4.40	.64	.82	.96	43.3	12.7	4.75	.65	.84	.98
71°F (22°C)	1400	660	52.2	15.3	3.86	.43	.56	.69	49.8	14.6	4.15	.43	.57	.70	47.3	13.9	4.48	.43	.58	.72	44.8	13.1	4.85	.44	.59	.74
	1600	755	53.1	15.6	3.89	.43	.58	.72	50.6	14.8	4.19	.44	.59	.74	48.1	14.1	4.53	.44	.60	.76	45.5	13.3	4.89	.45	.61	.78
	1800	850	53.8	15.8	3.92	.44	.60	.75	51.3	15.0	4.22	.45	.61	.77	48.7	14.3	4.56	.45	.62	.79	46.0	13.5	4.93	.46	.64	.82

NOTE - For Temperatures and Capacities not shown in tables, see bulletin - Cooling Unit Rating Table Correction Factor Data in Miscellaneous Engineering Data section.

Entering Wet Bulb Temperature	Total Air Volume		Outdoor Air Temperature Entering Outdoor Coil: 85°F (29°C)						95°F (35°C)						105°F (41°C)						115°F (46°C)					
			Total Cooling Capacity		Comp Motor kW Input	Sensible To Total Ratio (S/T) Dry Bulb			Total Cooling Capacity		Comp Motor kW Input	Sensible To Total Ratio (S/T) Dry Bulb			Total Cooling Capacity		Comp Motor kW Input	Sensible To Total Ratio (S/T) Dry Bulb			Total Cooling Capacity		Comp Motor kW Input	Sensible To Total Ratio (S/T) Dry Bulb		
	cfm	L/s	kBtuh	kW		75°F 24°C	80°F 27°C	85°F 29°C	kBtuh	kW		75°F 24°C	80°F 27°C	85°F 29°C	kBtuh	kW		75°F 24°C	80°F 27°C	85°F 29°C	kBtuh	kW		75°F 24°C	80°F 27°C	85°F 29°C
HS29-048 - CH33-50/60C-2F TXV Systems Only - CH33-60D-2F RFC Systems Only - CH23-65 TXV/RFC Systems COOLING CAPACITY																										
63°F (17°C)	1400	660	46.6	13.7	3.70	.73	.87	.98	44.3	13.0	3.96	.75	.89	1.00	42.1	12.3	4.25	.77	.91	1.00	39.8	11.7	4.57	.79	.94	1.00
	1600	755	47.6	14.0	3.74	.76	.91	1.00	45.4	13.3	4.00	.78	.93	1.00	43.1	12.6	4.30	.80	.95	1.00	40.9	12.0	4.64	.82	.98	1.00
	1800	850	48.6	14.2	3.77	.80	.95	1.00	46.3	13.6	4.05	.81	.97	1.00	44.1	12.9	4.36	.84	.99	1.00	41.9	12.3	4.71	.86	1.00	1.00
67°F (19°C)	1400	660	49.5	14.5	3.80	.57	.71	.84	47.1	13.8	4.08	.58	.72	.86	44.7	13.1	4.39	.59	.74	.88	42.3	12.4	4.74	.60	.76	.91
	1600	755	50.5	14.8	3.84	.59	.74	.88	48.0	14.1	4.12	.60	.76	.90	45.5	13.3	4.44	.61	.78	.93	43.0	12.6	4.79	.63	.80	.95
	1800	850	51.2	15.0	3.86	.61	.77	.92	48.7	14.3	4.15	.62	.79	.94	46.2	13.5	4.48	.63	.81	.96	43.7	12.8	4.83	.65	.84	.98
71°F (22°C)	1400	660	52.8	15.5	3.92	.43	.55	.68	50.3	14.7	4.22	.43	.56	.70	47.8	14.0	4.56	.43	.57	.71	45.2	13.2	4.94	.44	.59	.73
	1600	755	53.7	15.7	3.95	.43	.58	.72	51.2	15.0	4.26	.44	.59	.73	48.6	14.2	4.60	.44	.60	.75	45.9	13.5	4.99	.45	.61	.78
	1800	850	54.4	15.9	3.97	.44	.60	.75	51.9	15.2	4.29	.45	.61	.77	49.2	14.4	4.64	.45	.62	.79	46.5	13.6	5.02	.46	.64	.81
HS29-048 - CB30M-41 COOLING CAPACITY - TXV Systems Only																										
63°F (17°C)	1050	495	42.6	12.5	3.53	.68	.80	.90	40.6	11.9	3.76	.69	.81	.92	38.6	11.3	4.02	.70	.83	.94	36.6	10.7	4.31	.72	.85	.97
	1250	590	44.1	12.9	3.58	.71	.84	.95	42.0	12.3	3.82	.72	.86	.97	39.9	11.7	4.09	.74	.88	.99	37.8	11.1	4.40	.75	.90	1.00
	1450	685	45.3	13.3	3.62	.74	.88	.99	43.1	12.6	3.87	.75	.90	1.00	41.0	12.0	4.15	.77	.92	1.00	38.8	11.4	4.46	.79	.94	1.00
67°F (19°C)	1050	495	45.6	13.4	3.64	.54	.65	.76	43.5	12.7	3.89	.55	.66	.78	41.4	12.1	4.17	.55	.67	.79	39.2	11.5	4.49	.56	.69	.81
	1250	590	47.1	13.8	3.68	.56	.68	.80	44.9	13.2	3.95	.56	.69	.82	42.6	12.5	4.24	.57	.71	.84	40.3	11.8	4.56	.58	.73	.86
	1450	685	48.1	14.1	3.72	.57	.71	.84	45.9	13.5	3.99	.58	.73	.87	43.5	12.7	4.29	.59	.74	.89	41.1	12.0	4.62	.60	.77	.91
71°F (22°C)	1050	495	48.8	14.3	3.75	.42	.52	.62	46.6	13.7	4.02	.42	.53	.64	44.3	13.0	4.34	.42	.54	.65	42.0	12.3	4.68	.42	.54	.66
	1250	590	50.2	14.7	3.79	.42	.54	.66	48.0	14.1	4.08	.42	.55	.67	45.6	13.4	4.40	.43	.56	.68	43.2	12.7	4.76	.43	.57	.70
	1450	685	51.3	15.0	3.83	.43	.56	.69	49.0	14.4	4.12	.43	.57	.70	46.5	13.6	4.45	.43	.58	.72	44.0	12.9	4.82	.44	.59	.74
HS29-048 - CB31MV-41 COOLING CAPACITY - TXV Systems Only																										
63°F (17°C)	1265	595	43.3	12.7	3.55	.71	.84	.95	41.3	12.1	3.79	.72	.86	.97	39.2	11.5	4.06	.74	.88	.99	37.1	10.9	4.36	.75	.90	1.00
	1400	660	44.2	13.0	3.58	.73	.87	.98	42.1	12.3	3.83	.74	.89	.99	40.0	11.7	4.10	.76	.91	1.00	37.8	11.1	4.41	.78	.93	1.00
	1545	730	44.9	13.2	3.61	.75	.90	1.00	42.8	12.5	3.86	.77	.92	1.00	40.7	11.9	4.14	.79	.94	1.00	38.5	11.3	4.45	.81	.96	1.00
67°F (19°C)	1265	595	46.3	13.6	3.65	.56	.68	.80	44.1	12.9	3.91	.57	.69	.82	41.9	12.3	4.20	.57	.71	.84	39.6	11.6	4.53	.58	.73	.87
	1400	660	47.0	13.8	3.68	.57	.70	.83	44.8	13.1	3.94	.58	.72	.85	42.5	12.5	4.24	.59	.74	.88	40.2	11.8	4.57	.60	.76	.90
	1545	730	47.7	14.0	3.70	.58	.73	.86	45.4	13.3	3.97	.59	.74	.89	43.1	12.6	4.27	.60	.76	.91	40.7	11.9	4.61	.62	.78	.93
71°F (22°C)	1265	595	49.4	14.5	3.76	.42	.54	.66	47.1	13.8	4.05	.43	.55	.67	44.8	13.1	4.37	.43	.56	.68	42.4	12.4	4.72	.43	.57	.70
	1400	660	50.1	14.7	3.79	.43	.55	.68	47.8	14.0	4.08	.43	.56	.69	45.4	13.3	4.40	.43	.57	.71	43.0	12.6	4.76	.44	.58	.73
	1545	730	50.8	14.9	3.81	.43	.57	.70	48.4	14.2	4.10	.43	.58	.72	46.0	13.5	4.43	.44	.59	.74	43.5	12.7	4.80	.44	.60	.76
HS29-048 - CB29M-51 - CB28UH-048 COOLING CAPACITY - TXV Systems Only																										
63°F (17°C)	1300	615	45.4	13.3	3.66	.72	.85	.96	43.2	12.7	3.91	.73	.87	.98	41.1	12.0	4.19	.74	.89	.99	38.9	11.4	4.49	.76	.91	1.00
	1450	685	46.3	13.6	3.69	.74	.88	.99	44.0	12.9	3.94	.75	.90	1.00	41.8	12.3	4.23	.77	.92	1.00	39.6	11.6	4.55	.79	.94	1.00
	1600	755	47.0	13.8	3.72	.76	.91	1.00	44.8	13.1	3.98	.78	.93	1.00	42.6	12.5	4.27	.80	.95	1.00	40.3	11.8	4.59	.82	.97	1.00
67°F (19°C)	1300	615	48.4	14.2	3.76	.56	.69	.81	46.1	13.5	4.03	.57	.70	.83	43.8	12.8	4.34	.58	.72	.85	41.4	12.1	4.67	.59	.74	.88
	1450	685	49.2	14.4	3.79	.57	.71	.84	46.8	13.7	4.06	.58	.73	.87	44.5	13.0	4.37	.59	.74	.89	42.0	12.3	4.71	.60	.77	.91
	1600	755	49.8	14.6	3.82	.59	.73	.87	47.5	13.9	4.09	.60	.75	.90	45.0	13.2	4.40	.61	.77	.92	42.5	12.5	4.75	.62	.79	.94
71°F (22°C)	1300	615	51.6	15.1	3.88	.42	.54	.66	49.2	14.4	4.17	.43	.55	.68	46.8	13.7	4.50	.43	.56	.69	44.3	13.0	4.87	.43	.57	.71
	1450	685	52.4	15.4	3.90	.43	.56	.69	50.0	14.7	4.20	.43	.57	.70	47.5	13.9	4.54	.43	.58	.72	45.0	13.2	4.91	.44	.59	.74
	1600	755	53.1	15.6	3.92	.43	.57	.71	50.6	14.8	4.23	.44	.58	.73	48.1	14.1	4.57	.44	.59	.75	45.5	13.3	4.94	.45	.61	.77
HS29-048 - CB30M-46 - CB30U-41/46 COOLING CAPACITY - TXV Systems Only																										
63°F (17°C)	1250	590	44.9	13.2	3.60	.71	.84	.95	42.7	12.5	3.84	.72	.86	.97	40.6	11.9	4.11	.74	.88	.99	38.4	11.3	4.42	.75	.90	1.00
	1400	660	45.8	13.4	3.63	.73	.87	.98	43.6	12.8	3.88	.74	.89	.99	41.4	12.1	4.16	.76	.91	1.00	39.2	11.5	4.47	.78	.93	1.00
	1550	730	46.6	13.7	3.66	.75	.90	1.00	44.4	13.0	3.91	.77	.92	1.00	42.2	12.4	4.20	.79	.94	1.00	39.9	11.7	4.52	.81	.96	1.00
67°F (19°C)	1250	590	47.9	14.0	3.70	.56	.68	.80	45.6	13.4	3.96	.56	.69	.82	43.3	12.7	4.26	.57	.71	.84	41.0	12.0	4.59	.58	.73	.86
	1400	660	48.7	14.3	3.73	.57	.70	.83	46.4	13.6	4.00	.58	.72	.85	44.0	12.9	4.30	.59	.74	.88	41.6	12.2	4.63	.60	.76	.90
	1550	730	49.4	14.5	3.76	.58	.73	.86	47.1	13.8	4.03	.59	.74	.89	44.6	13.1	4.33	.60	.76	.91	42.2	12.4	4.67	.62	.78	.93
71°F (22°C)	1250	590	51.1	15.0	3.81	.42	.54	.66	48.8	14.3	4.10	.42	.55	.67	46.4	13.6	4.43	.43	.56	.68	43.9	12.9	4.78	.43	.57	.70
	1400	660	51.9	15.2	3.84	.43	.55	.68	49.6	14.5	4.13	.43	.56	.69	47.1	13.8	4.46	.43	.57	.71	44.6	13.1	4.83	.44	.58	.73
	1550	730	52.6	15.4	3.86	.43	.57	.70	50.2	14.7	4.16	.43	.58	.72	47.7	14.0	4.50	.44	.59	.74	45.1	13.2	4.86	.44	.60	.76
HS29-048 - CB29M-65 - CB28UH-060 COOLING CAPACITY - TXV Systems Only																										
63°F (17°C)	1400	660	46.2	13.5	3.67	.73	.87	.98	44.1	12.9	3.92	.74	.89	.99	41.9	12.3	4.20	.76	.91	1.00	39.6	11.6	4.51	.78	.93	1.00
	1600	755	47.3	13.9	3.70	.76	.91	1.00	45.1	13.2	3.96	.78	.93	1.00	42.8	12.5	4.25	.80	.95	1.00	40.6	11.9	4.58	.82	.97	1.00
	1800	850	48.2	14.1	3.73	.79	.94	1.00	46.0	13.5	4.00	.81	.96	1.00	43.7	12.8	4.30	.83	.98	1.00	41.5	12.2	4.64	.85	1.00	1.00
67°F (19°C)	1400	660	49.2	14.4	3.77	.57	.70	.83	46.9	13.7	4.04	.58	.72	.85	44.5	13.0	4.34	.59	.74	.88	42.1	12.3	4.68	.60	.76	.90
	1600	755	50.1	14.7	3.80	.59	.73	.87	47.8	14.0	4.08	.60	.75	.90	45.3	13.3	4.39	.61	.77	.92	42.8	12.5	4.73	.62	.79	.94
	1800	850	50.9	14.9	3.82	.60	.77	.91	48.4	14.2	4.11	.62	.78	.93	45.9	13.5	4.42	.63	.81	.96	43.4	12.7	4.77	.64	.83	.98
71°F (22°C)	1400	660	52.5	15.4	3.88	.43	.55	.68	50.1	14.7	4.17	.43	.56	.69	47.6	14.0	4.51	.43	.57	.71	45.0	13.2	4.88	.44	.58	.73
	1600	755	53.4	15.6	3.91	.43	.57	.71	50.9	14.9	4.21	.44	.58	.73	48.4	14.2	4.55	.44	.59	.75	45.8	13.4	4.92	.45	.61	.77
	1800	850	54.1	15.9	3.93	.44	.59	.74	51.6	15.1	4.24	.44	.60	.76	48.9	14.3	4.58	.45	.62	.78	46.3	13.6	4.96	.45	.63	.81
HS29-048 - CB30M-51 - CB30U-51 COOLING CAPACITY - TXV Systems Only																										
63°F (17°C)	1400	660	46.0	13.5	3.66	.73	.86	.98	43.8	12.8	3.91	.74	.88	1.00	41.5	12.2	4.20	.76	.91	1.00	39.2	11.5	4.53	.78	.93	1.00
	1600	755	47.1	13.8	3.70	.76	.90	1.00	44.8	13.1	3.96	.77	.93	1.00	42.5	12.5	4.26	.79	.95	1.00	40.2	11.8	4.59	.82	.97	1.00
	1800	850	48.0	14.1	3.73	.79	.94	1.00	45.7	13.4	4.00	.81	.96	1.00	43.4	12.7	4.31	.83	.98	1.00	41.2	12.1	4.66	.85	1.00	1.00
67°F (19°C)	1400	660	49.0	14.4	3.76	.57	.70	.83	46.7	13.7	4.05	.58	.71	.85	44.2	13.0	4.36	.59	.73	.87	41.8	12.3	4.70	.60	.75	.90
	1600	755	50.0	14.7	3.80	.59	.73	.87	47.5	13.9	4.08	.60	.75	.89	45.1	13.2	4.41	.61	.77	.92	42.5	12.5	4.76	.62	.79	.94
	1800	850	50.8	14.9	3.82	.60	.76	.91	48.3	14.2	4.12	.62	.78	.93	45.7	13.4	4.44	.63	.80	.96	43.2	12.7	4.80	.64	.83	.98
71°F (22°C)	1400	660	52.3	15.3	3.88	.43	.55	.67	49.9	14.6	4.19	.43	.56	.69	47.3	13.9	4.53	.43	.57	.71	44.8	13.1	4.91	.44	.58	.73
	1600	755	53.3	15.6	3.91	.43	.57	.71	50.8	14.9	4.22	.44	.58	.72	48.1	14.1	4.58	.44	.59	.74	45.5	13.3	4.96	.45	.61	.77
	1800	850	54.1	15.9	3.94	.44	.59	.74	51.5	15.1	4.26	.44	.60	.76	48.8	14.3	4.61	.45	.62	.78	46.1	13.5	5.00	.45	.63	.80

NOTE - For Temperatures and Capacities not shown in tables, see bulletin - Cooling Unit Rating Table Correction Factor Data in Miscellaneous Engineering Data section.

Entering Wet Bulb Temperature	Total Air Volume		Outdoor Air Temperature Entering Outdoor Coil																							
			85°F (29°C)						95°F (35°C)						105°F (41°C)						115°F (46°C)					
			Total Cooling Capacity		Comp Motor kW Input	Sensible To Total Ratio (S/T) Dry Bulb			Total Cooling Capacity		Comp Motor kW Input	Sensible To Total Ratio (S/T) Dry Bulb			Total Cooling Capacity		Comp Motor kW Input	Sensible To Total Ratio (S/T) Dry Bulb			Total Cooling Capacity		Comp Motor kW Input	Sensible To Total Ratio (S/T) Dry Bulb		
	cfm	L/s	kBtuh	kW		75°F 24°C	80°F 27°C	85°F 29°C	kBtuh	kW		75°F 24°C	80°F 27°C	85°F 29°C	kBtuh	kW		75°F 24°C	80°F 27°C	85°F 29°C	kBtuh	kW		75°F 24°C	80°F 27°C	85°F 29°C
HS29-048 - CB31MV-51 COOLING CAPACITY - TXV Systems Only																										
63°F (17°C)	1425	675	46.0	13.5	3.66	.73	.87	.99	43.8	12.8	3.92	.75	.89	1.00	41.5	12.2	4.22	.77	.92	1.00	39.2	11.5	4.54	.79	.94	1.00
	1625	765	46.9	13.7	3.70	.76	.91	1.00	44.7	13.1	3.96	.78	.93	1.00	42.4	12.4	4.26	.80	.95	1.00	40.1	11.8	4.60	.82	.98	1.00
	1805	850	47.8	14.0	3.73	.79	.94	1.00	45.5	13.3	4.00	.81	.96	1.00	43.2	12.7	4.31	.83	.98	1.00	41.0	12.0	4.66	.85	1.00	1.00
67°F (19°C)	1425	675	49.0	14.4	3.77	.57	.71	.84	46.6	13.7	4.05	.58	.72	.86	44.2	13.0	4.37	.59	.74	.88	41.7	12.2	4.71	.60	.76	.91
	1625	765	49.9	14.6	3.80	.59	.74	.88	47.4	13.9	4.09	.60	.75	.90	44.9	13.2	4.41	.61	.77	.92	42.4	12.4	4.76	.62	.80	.95
	1805	850	50.5	14.8	3.82	.60	.76	.91	48.0	14.1	4.11	.62	.78	.93	45.5	13.3	4.44	.63	.81	.96	43.0	12.6	4.80	.64	.83	.98
71°F (22°C)	1425	675	52.3	15.3	3.88	.43	.55	.68	49.8	14.6	4.19	.43	.56	.70	47.3	13.9	4.54	.43	.57	.72	44.7	13.1	4.92	.44	.59	.74
	1625	765	53.1	15.6	3.91	.43	.57	.71	50.6	14.8	4.23	.44	.58	.73	48.0	14.1	4.58	.44	.60	.75	45.3	13.3	4.96	.45	.61	.77
	1805	850	53.8	15.8	3.93	.44	.59	.74	51.2	15.0	4.25	.44	.60	.76	48.5	14.2	4.61	.45	.62	.78	45.8	13.4	5.00	.45	.63	.81
HS29-048 - CB30M-65 - CB30U-65 COOLING CAPACITY - TXV Systems Only																										
63°F (17°C)	1400	660	46.5	13.6	3.72	.73	.86	.98	44.3	13.0	3.98	.74	.88	1.00	42.0	12.3	4.28	.76	.91	1.00	39.7	11.6	4.61	.78	.93	1.00
	1600	755	47.6	14.0	3.76	.76	.90	1.00	45.3	13.3	4.03	.77	.93	1.00	43.0	12.6	4.34	.79	.95	1.00	40.7	11.9	4.67	.82	.97	1.00
	1800	850	48.6	14.2	3.79	.79	.94	1.00	46.2	13.5	4.07	.81	.96	1.00	43.9	12.9	4.39	.83	.98	1.00	41.6	12.2	4.75	.85	1.00	1.00
67°F (19°C)	1400	660	49.6	14.5	3.83	.57	.70	.83	47.2	13.8	4.12	.58	.71	.85	44.7	13.1	4.44	.59	.73	.87	42.2	12.4	4.79	.60	.75	.90
	1600	755	50.6	14.8	3.87	.59	.73	.87	48.1	14.1	4.16	.60	.75	.89	45.6	13.4	4.49	.61	.77	.92	43.0	12.6	4.84	.62	.79	.94
	1800	850	51.4	15.1	3.89	.60	.76	.91	48.8	14.3	4.19	.61	.78	.93	46.3	13.6	4.52	.63	.80	.96	43.7	12.8	4.89	.64	.83	.98
71°F (22°C)	1400	660	53.0	15.5	3.95	.43	.55	.67	50.4	14.8	4.26	.43	.56	.69	47.9	14.0	4.61	.43	.57	.71	45.3	13.3	5.00	.44	.58	.73
	1600	755	53.9	15.8	3.98	.43	.57	.71	51.4	15.1	4.30	.44	.58	.72	48.7	14.3	4.66	.44	.59	.74	46.0	13.5	5.05	.44	.61	.77
	1800	850	54.7	16.0	4.01	.44	.59	.74	52.1	15.3	4.33	.44	.60	.76	49.4	14.5	4.70	.45	.61	.78	46.6	13.7	5.10	.45	.63	.80
HS29-048 - CB31MV-65 COOLING CAPACITY - TXV Systems Only																										
63°F (17°C)	1425	675	47.0	13.8	3.74	.73	.87	.99	44.7	13.1	4.01	.75	.89	1.00	42.4	12.4	4.30	.77	.92	1.00	40.1	11.8	4.63	.79	.94	1.00
	1625	765	47.9	14.0	3.77	.76	.91	1.00	45.6	13.4	4.05	.78	.93	1.00	43.3	12.7	4.35	.80	.95	1.00	41.0	12.0	4.69	.82	.98	1.00
	1805	850	48.8	14.3	3.80	.79	.94	1.00	46.4	13.6	4.08	.81	.96	1.00	44.1	12.9	4.40	.83	.98	1.00	41.8	12.3	4.76	.85	1.00	1.00
67°F (19°C)	1425	675	50.0	14.7	3.85	.57	.71	.84	47.6	14.0	4.13	.58	.72	.86	45.1	13.2	4.46	.59	.74	.88	42.6	12.5	4.81	.60	.76	.91
	1625	765	50.9	14.9	3.88	.59	.74	.88	48.4	14.2	4.17	.60	.75	.90	45.9	13.5	4.50	.61	.77	.92	43.3	12.7	4.86	.62	.80	.95
	1805	850	51.6	15.1	3.90	.60	.76	.91	49.0	14.4	4.20	.62	.78	.93	46.5	13.6	4.53	.63	.81	.96	43.9	12.9	4.90	.64	.83	.98
71°F (22°C)	1425	675	53.4	15.6	3.96	.43	.55	.68	50.9	14.9	4.28	.43	.56	.70	48.3	14.2	4.63	.43	.57	.72	45.6	13.4	5.02	.44	.59	.74
	1625	765	54.2	15.9	3.99	.43	.57	.71	51.7	15.2	4.31	.44	.58	.73	49.0	14.4	4.67	.44	.60	.75	46.3	13.6	5.07	.45	.61	.77
	1805	850	54.9	16.1	4.01	.44	.59	.74	52.3	15.3	4.34	.44	.60	.76	49.6	14.5	4.71	.45	.62	.78	46.8	13.7	5.11	.45	.63	.81
HS29-048 - CVP10-51/EC10Q4 COOLING CAPACITY - TXV Systems Only																										
63°F (17°C)	1400	660	44.9	13.2	3.71	.73	.86	.98	42.7	12.5	3.96	.74	.88	.99	40.5	11.9	4.26	.76	.90	1.00	38.3	11.2	4.57	.78	.93	1.00
	1600	755	46.0	13.5	3.75	.76	.90	1.00	43.8	12.8	4.01	.77	.92	1.00	41.5	12.2	4.31	.79	.95	1.00	39.3	11.5	4.64	.81	.97	1.00
	1800	850	46.9	13.7	3.78	.79	.94	1.00	44.7	13.1	4.05	.80	.96	1.00	42.5	12.5	4.36	.83	.98	1.00	40.3	11.8	4.71	.85	1.00	1.00
67°F (19°C)	1400	660	47.8	14.0	3.82	.57	.70	.83	45.6	13.4	4.09	.58	.71	.85	43.2	12.7	4.41	.59	.73	.87	40.8	12.0	4.75	.60	.75	.90
	1600	755	48.8	14.3	3.85	.58	.73	.87	46.5	13.6	4.14	.59	.75	.89	44.0	12.9	4.46	.61	.77	.92	41.6	12.2	4.81	.62	.79	.94
	1800	850	49.6	14.5	3.88	.60	.76	.91	47.2	13.8	4.17	.61	.78	.93	44.7	13.1	4.49	.63	.80	.95	42.2	12.4	4.85	.64	.83	.98
71°F (22°C)	1400	660	51.1	15.0	3.93	.43	.55	.67	48.7	14.3	4.23	.43	.56	.69	46.2	13.5	4.58	.43	.57	.71	43.7	12.8	4.96	.44	.58	.72
	1600	755	52.0	15.2	3.96	.43	.57	.71	49.6	14.5	4.27	.44	.58	.72	47.1	13.8	4.63	.44	.59	.74	44.5	13.0	5.01	.44	.61	.76
	1800	850	52.8	15.5	3.99	.44	.59	.74	50.3	14.7	4.31	.44	.60	.76	47.7	14.0	4.66	.45	.61	.78	45.0	13.2	5.05	.45	.63	.80
HS29-048 - CVP10-65/EC10Q5 COOLING CAPACITY - TXV Systems Only																										
63°F (17°C)	1400	660	46.0	13.5	3.72	.73	.87	.99	43.8	12.8	3.98	.75	.89	1.00	41.6	12.2	4.27	.77	.92	1.00	39.3	11.5	4.59	.79	.94	1.00
	1600	755	47.1	13.8	3.76	.77	.92	1.00	44.9	13.2	4.02	.78	.94	1.00	42.6	12.5	4.33	.80	.96	1.00	40.4	11.8	4.66	.83	.98	1.00
	1800	850	48.1	14.1	3.79	.80	.95	1.00	45.9	13.5	4.07	.82	.97	1.00	43.6	12.8	4.39	.84	.99	1.00	41.5	12.2	4.74	.86	1.00	1.00
67°F (19°C)	1400	660	48.9	14.3	3.82	.57	.71	.84	46.6	13.7	4.10	.58	.72	.86	44.2	13.0	4.42	.59	.74	.88	41.8	12.3	4.76	.60	.76	.91
	1600	755	49.9	14.6	3.86	.59	.74	.88	47.5	13.9	4.14	.60	.76	.91	45.0	13.2	4.46	.61	.78	.93	42.5	12.5	4.82	.63	.80	.95
	1800	850	50.7	14.9	3.88	.61	.78	.92	48.2	14.1	4.18	.62	.80	.95	45.7	13.4	4.50	.64	.82	.97	43.2	12.7	4.87	.65	.84	.99
71°F (22°C)	1400	660	52.2	15.3	3.94	.43	.56	.68	49.8	14.6	4.24	.43	.57	.70	47.2	13.8	4.59	.43	.58	.72	44.7	13.1	4.97	.44	.59	.74
	1600	755	53.2	15.6	3.97	.43	.58	.72	50.6	14.8	4.28	.44	.59	.74	48.0	14.1	4.63	.44	.60	.76	45.4	13.3	5.02	.45	.61	.78
	1800	850	53.9	15.8	3.99	.44	.60	.75	51.3	15.0	4.31	.45	.61	.77	48.7	14.3	4.67	.45	.63	.80	46.0	13.5	5.06	.46	.64	.82

NOTE - For Temperatures and Capacities not shown in tables, see bulletin - Cooling Unit Rating Table Correction Factor Data in Miscellaneous Engineering Data section.

Entering Wet Bulb Temperature	Total Air Volume		Outdoor Air Temperature Entering Outdoor Coil: 85°F (29°C)						95°F (35°C)						105°F (41°C)						115°F (46°C)					
			Total Cooling Capacity		Comp Motor kW Input	Sensible To Total Ratio (S/T) Dry Bulb			Total Cooling Capacity		Comp Motor kW Input	Sensible To Total Ratio (S/T) Dry Bulb			Total Cooling Capacity		Comp Motor kW Input	Sensible To Total Ratio (S/T) Dry Bulb			Total Cooling Capacity		Comp Motor kW Input	Sensible To Total Ratio (S/T) Dry Bulb		
	cfm	L/s	kBtuh	kW		75°F 24°C	80°F 27°C	85°F 29°C	kBtuh	kW		75°F 24°C	80°F 27°C	85°F 29°C	kBtuh	kW		75°F 24°C	80°F 27°C	85°F 29°C	kBtuh	kW		75°F 24°C	80°F 27°C	85°F 29°C
HS29-060 - C33-50/60C COOLING CAPACITY - TXV Systems Only																										
63°F (17°C)	1500	710	56.0	16.4	4.41	.71	.83	.94	54.0	15.8	4.92	.72	.84	.95	52.0	15.2	5.51	.73	.85	.97	50.0	14.7	6.19	.74	.87	.99
	1700	800	57.5	16.9	4.44	.73	.85	.97	55.5	16.3	4.95	.74	.87	.99	53.5	15.7	5.54	.75	.88	1.00	51.5	15.1	6.22	.77	.90	1.00
	1900	895	59.0	17.3	4.47	.75	.88	1.00	57.0	16.7	4.98	.76	.90	1.00	54.5	16.0	5.58	.77	.92	1.00	52.5	15.4	6.24	.79	.94	1.00
67°F (19°C)	1500	710	59.0	17.3	4.47	.58	.69	.79	57.0	16.7	4.99	.59	.70	.81	55.0	16.1	5.59	.59	.71	.82	53.0	15.5	6.27	.60	.72	.84
	1700	800	60.5	17.7	4.50	.59	.71	.82	58.5	17.1	5.03	.60	.72	.83	56.5	16.6	5.62	.60	.73	.85	54.5	16.0	6.32	.61	.74	.87
	1900	895	62.0	18.2	4.53	.60	.73	.85	60.0	17.6	5.06	.61	.74	.86	58.0	17.0	5.66	.62	.75	.88	55.5	16.3	6.35	.63	.77	.90
71°F (22°C)	1500	710	62.0	18.2	4.54	.46	.57	.67	60.0	17.6	5.06	.46	.57	.67	58.0	17.0	5.67	.47	.58	.68	56.0	16.4	6.36	.47	.58	.69
	1700	800	64.0	18.8	4.57	.47	.58	.69	62.0	18.2	5.11	.47	.58	.69	59.5	17.4	5.71	.47	.59	.71	57.5	16.9	6.40	.47	.60	.72
	1900	895	65.0	19.0	4.61	.47	.59	.70	63.0	18.5	5.14	.47	.60	.72	61.0	17.9	5.75	.48	.60	.73	58.5	17.1	6.44	.48	.61	.74
HS29-060 - C33-60D COOLING CAPACITY - TXV Systems Only																										
63°F (17°C)	1700	800	58.5	17.1	4.46	.74	.87	.98	56.5	16.6	4.97	.75	.88	1.00	54.5	16.0	5.57	.77	.90	1.00	52.0	15.2	6.24	.78	.92	1.00
	1900	895	60.0	17.6	4.49	.76	.89	1.00	58.0	17.0	5.01	.78	.91	1.00	55.5	16.3	5.60	.79	.93	1.00	53.5	15.7	6.28	.80	.95	1.00
	2100	990	61.0	17.9	4.52	.78	.92	1.00	59.0	17.3	5.03	.80	.94	1.00	56.5	16.6	5.63	.81	.96	1.00	54.5	16.0	6.31	.83	.98	1.00
67°F (19°C)	1700	800	61.5	18.0	4.52	.60	.72	.83	59.5	17.4	5.06	.60	.73	.85	57.5	16.9	5.65	.61	.74	.86	55.0	16.1	6.34	.62	.76	.88
	1900	895	63.0	18.5	4.55	.61	.74	.86	61.0	17.9	5.08	.62	.75	.88	58.5	17.1	5.69	.63	.77	.90	56.5	16.6	6.37	.64	.78	.92
	2100	990	64.5	18.9	4.58	.62	.76	.89	62.0	18.2	5.11	.63	.77	.91	59.5	17.4	5.72	.64	.79	.93	57.0	16.7	6.40	.65	.80	.95
71°F (22°C)	1700	800	65.0	19.0	4.60	.47	.58	.69	63.0	18.5	5.14	.47	.59	.70	60.5	17.7	5.74	.47	.60	.72	58.5	17.1	6.43	.47	.60	.73
	1900	895	66.0	19.3	4.64	.47	.60	.72	64.5	18.9	5.17	.48	.60	.73	62.0	18.2	5.78	.48	.61	.74	59.5	17.4	6.48	.48	.62	.76
	2100	990	67.0	19.6	4.66	.48	.61	.74	65.0	19.0	5.20	.48	.62	.75	63.0	18.5	5.81	.49	.63	.77	60.5	17.7	6.50	.49	.64	.78
HS29-060 - C33-62D COOLING CAPACITY - TXV Systems Only																										
63°F (17°C)	1800	850	60.0	17.6	4.50	.75	.88	.99	58.0	17.0	5.01	.76	.89	1.00	56.0	16.4	5.61	.77	.91	1.00	53.5	15.7	6.29	.79	.93	1.00
	2000	945	61.5	18.0	4.53	.77	.90	1.00	59.5	17.4	5.05	.78	.92	1.00	57.0	16.7	5.65	.79	.94	1.00	55.0	16.1	6.33	.81	.96	1.00
	2200	1040	63.0	18.5	4.55	.79	.93	1.00	60.5	17.7	5.07	.80	.95	1.00	58.5	17.1	5.67	.82	.97	1.00	56.0	16.4	6.36	.84	.99	1.00
67°F (19°C)	1800	850	63.0	18.5	4.56	.60	.73	.84	61.0	17.9	5.09	.61	.74	.86	59.0	17.3	5.69	.62	.75	.88	56.5	16.6	6.37	.63	.76	.90
	2000	945	65.0	19.0	4.59	.62	.74	.87	62.5	18.3	5.12	.63	.76	.89	60.0	17.6	5.73	.63	.77	.91	57.5	16.9	6.41	.64	.79	.93
	2200	1040	66.0	19.3	4.62	.63	.76	.90	63.5	18.6	5.15	.64	.78	.92	61.0	17.9	5.75	.65	.80	.94	58.5	17.1	6.45	.66	.81	.97
71°F (22°C)	1800	850	67.0	19.6	4.64	.47	.59	.70	64.5	18.9	5.17	.47	.60	.71	62.0	18.2	5.78	.48	.60	.73	59.5	17.4	6.48	.48	.61	.74
	2000	945	68.0	19.9	4.67	.48	.60	.72	66.0	19.3	5.20	.48	.61	.74	63.5	18.6	5.82	.48	.62	.75	61.0	17.9	6.51	.49	.63	.77
	2200	1040	69.0	20.2	4.70	.48	.62	.74	67.0	19.6	5.23	.48	.62	.76	64.5	18.9	5.84	.49	.63	.77	62.0	18.2	6.55	.49	.65	.79
HS29-060 - C33-50/60C with G60UHV-60C COOLING CAPACITY - TXV Systems Only																										
63°F (17°C)	1785	845	58.0	17.0	4.45	.74	.86	.98	56.0	16.4	4.97	.75	.88	1.00	54.0	15.8	5.56	.76	.90	1.00	52.0	15.2	6.24	.78	.92	1.00
	1985	935	59.5	17.4	4.48	.76	.89	1.00	57.5	16.9	4.99	.77	.91	1.00	55.0	16.1	5.59	.78	.93	1.00	53.0	15.5	6.27	.80	.95	1.00
	2180	1030	60.5	17.7	4.50	.78	.92	1.00	58.5	17.1	5.02	.79	.94	1.00	56.0	16.4	5.62	.80	.96	1.00	54.0	15.8	6.30	.82	.98	1.00
67°F (19°C)	1785	845	61.0	17.9	4.52	.60	.72	.83	59.5	17.4	5.04	.60	.73	.85	57.0	16.7	5.64	.61	.74	.86	55.0	16.1	6.33	.62	.75	.88
	1985	935	62.5	18.3	4.55	.61	.74	.86	60.5	17.7	5.07	.62	.75	.88	58.5	17.1	5.67	.62	.76	.89	56.0	16.4	6.36	.63	.78	.91
	2180	1030	63.5	18.6	4.56	.62	.75	.88	61.5	18.0	5.09	.63	.77	.90	59.0	17.3	5.70	.64	.78	.92	57.0	16.7	6.39	.65	.80	.95
71°F (22°C)	1785	845	64.5	18.9	4.59	.47	.58	.69	62.5	18.3	5.12	.47	.59	.70	60.0	17.6	5.73	.47	.59	.71	58.0	17.0	6.42	.48	.60	.73
	1985	935	66.0	19.3	4.62	.47	.59	.71	63.5	18.6	5.15	.48	.60	.72	61.5	18.0	5.77	.48	.61	.74	59.0	17.3	6.46	.48	.62	.75
	2180	1030	67.0	19.6	4.65	.48	.61	.73	64.5	18.9	5.18	.48	.61	.74	62.5	18.3	5.79	.49	.62	.76	60.0	17.6	6.49	.49	.63	.77
HS29-060 - C33-50/60C with G61MPV-60C COOLING CAPACITY - TXV Systems Only																										
63°F (17°C)	1765	835	58.0	17.0	4.44	.74	.86	.98	56.0	16.4	4.96	.75	.88	.99	54.0	15.8	5.55	.76	.89	1.00	51.5	15.1	6.23	.77	.91	1.00
	1965	925	59.5	17.4	4.47	.76	.89	1.00	57.0	16.7	4.99	.77	.91	1.00	55.0	16.1	5.59	.78	.93	1.00	53.0	15.5	6.26	.80	.95	1.00
	2165	1020	60.5	17.7	4.50	.78	.92	1.00	58.5	17.1	5.02	.79	.94	1.00	56.5	16.6	5.62	.81	.96	1.00	54.0	15.8	6.30	.82	.98	1.00
67°F (19°C)	1765	835	61.0	17.9	4.51	.60	.71	.83	59.0	17.3	5.04	.60	.72	.84	57.0	16.7	5.64	.61	.74	.86	55.0	16.1	6.33	.62	.75	.88
	1965	925	62.5	18.3	4.55	.61	.73	.86	60.5	17.7	5.07	.62	.75	.87	58.0	17.0	5.67	.62	.76	.89	56.0	16.4	6.36	.63	.77	.91
	2165	1020	63.5	18.6	4.57	.62	.76	.89	61.5	18.0	5.09	.63	.77	.90	59.0	17.3	5.70	.64	.78	.92	57.0	16.7	6.39	.65	.80	.95
71°F (22°C)	1765	835	64.5	18.9	4.58	.47	.58	.69	62.0	18.2	5.12	.47	.59	.70	60.0	17.6	5.72	.47	.59	.71	57.5	16.9	6.42	.47	.60	.73
	1965	925	66.0	19.3	4.62	.47	.59	.71	63.5	18.6	5.15	.48	.60	.72	61.5	18.0	5.76	.48	.61	.74	59.0	17.3	6.46	.48	.62	.75
	2165	1020	67.0	19.6	4.65	.48	.61	.73	65.0	19.0	5.18	.49	.62	.75	62.5	18.3	5.79	.49	.63	.76	60.0	17.6	6.49	.49	.64	.78
HS29-060 - C33-60D with G60UHV-60D-135 COOLING CAPACITY - TXV Systems Only																										
63°F (17°C)	1800	850	59.5	17.4	4.47	.75	.88	1.00	57.0	16.7	4.99	.76	.90	1.00	55.0	16.1	5.58	.77	.91	1.00	52.5	15.4	6.26	.79	.93	1.00
	2000	945	60.5	17.7	4.50	.77	.91	1.00	58.5	17.1	5.02	.78	.92	1.00	56.0	16.4	5.62	.80	.95	1.00	54.0	15.8	6.29	.81	.97	1.00
	2205	1040	62.0	18.2	4.53	.79	.93	1.00	59.5	17.4	5.05	.80	.96	1.00	57.5	16.9	5.64	.82	.97	1.00	55.0	16.1	6.33	.84	1.00	1.00
67°F (19°C)	1800	850	62.5	18.3	4.54	.60	.73	.85	60.5	17.7	5.07	.61	.74	.86	58.0	17.0	5.67	.62	.75	.88	55.5	16.3	6.35	.63	.77	.90
	2000	945	63.5	18.6	4.56	.62	.75	.88	61.5	18.0	5.10	.62	.76	.89	59.0	17.3	5.70	.63	.77	.91	56.5	16.6	6.39	.64	.79	.94
	2205	1040	64.5	18.9	4.60	.63	.77	.90	62.5	18.3	5.12	.64	.78	.92	60.0	17.6	5.73	.64	.80	.95	57.5	16.9	6.42	.66	.82	.97
71°F (22°C)	1800	850	66.0	19.3	4.62	.47	.59	.70	63.5	18.6	5.15	.47	.59	.72	61.5	18.0	5.76	.47	.60	.73	59.0	17.3	6.45	.48	.61	.74
	2000	945	67.0	19.6	4.65	.47	.60	.72	65.0	19.0	5.18	.48	.61	.74	62.5	18.3	5.79	.48	.62	.75	60.0	17.6	6.49	.48	.63	.77
	2205	1040	68.0	19.9	4.68	.48	.62	.75	66.0	19.3	5.21	.48	.62	.76	63.5	18.6	5.82	.49	.64	.78	61.0	17.9	6.52	.49	.64	.79
HS29-060 - C33-60D with G61MPV-60D-135 COOLING CAPACITY - TXV Systems Only																										
63°F (17°C)	1785	845	59.0	17.3	4.47	.75	.88	.99	57.0	16.7	4.99	.76	.89	1.00	55.0	16.1	5.58	.77	.91	1.00	52.5	15.4	6.26	.79	.93	1.00
	2000	945	60.5	17.7	4.50	.77	.91	1.00	58.5	17.1	5.02	.78	.92	1.00	56.0	16.4	5.62	.80	.95	1.00	54.0	15.8	6.30	.81	.97	1.00
	2195	1035	62.0	18.2	4.53	.79	.94	1.00	59.5	17.4	5.05	.81	.96	1.00	57.5	16.9	5.65	.82	.98	1.00	55.0	16.1	6.33	.84	1.00	1.00
67°F (19°C)	1785	845	62.0	18.2	4.54	.60	.72	.84	60.0	17.6	5.06	.61	.74	.86	58.0	17.0	5.66	.61	.75	.88	55.5	16.3	6.35	.62	.76	.90
	2000	945	63.5	18.6	4.56	.62	.75	.88	61.5	18.0	5.10	.62	.76	.89	59.0	17.3	5.70	.63	.78	.91	56.5	16.6	6.39	.64	.79	.94
	2195	1035	65.0	19.0	4.60	.63	.77	.91	62.5	18.3	5.12	.64	.78	.93	60.0	17.6	5.73	.65	.80	.95	57.5	16.9	6.42	.66	.82	.97
71°F (22°C)	1785	845	65.0	19.0	4.61	.47	.59	.70	63.5	18.6	5.14	.47	.59	.71	61.0	17.9	5.76	.47	.60	.73	59.0	17.3	6.45	.48	.61	.74
	2000	945	67.0	19.6	4.65	.48	.60	.72	65.0	19.0	5.18	.48	.61	.74	62.5	18.3	5.79	.48	.62	.75	60.0	17.6	6.49	.49	.63	.77
	2195	1035	68.0	19.9	4.68	.48	.62	.75	66.0	19.3	5.21	.49	.63	.76	63.5	18.6	5.83	.49	.64	.78	61.0	17.9	6.52	.50	.65	.80

NOTE - For Temperatures and Capacities not shown in tables, see bulletin - Cooling Unit Rating Table Correction Factor Data in Miscellaneous Engineering Data section.

Entering Wet Bulb Temperature	Total Air Volume		Outdoor Air Temperature Entering Outdoor Coil																							
			85°F (29°C)						95°F (35°C)						105°F (41°C)						115°F (46°C)					
			Total Cooling Capacity		Comp Motor kW Input	Sensible To Total Ratio (S/T) Dry Bulb			Total Cooling Capacity		Comp Motor kW Input	Sensible To Total Ratio (S/T) Dry Bulb			Total Cooling Capacity		Comp Motor kW Input	Sensible To Total Ratio (S/T) Dry Bulb			Total Cooling Capacity		Comp Motor kW Input	Sensible To Total Ratio (S/T) Dry Bulb		
	cfm	L/s	kBtuh	kW		75°F 24°C	80°F 27°C	85°F 29°C	kBtuh	kW		75°F 24°C	80°F 27°C	85°F 29°C	kBtuh	kW		75°F 24°C	80°F 27°C	85°F 29°C	kBtuh	kW		75°F 24°C	80°F 27°C	85°F 29°C
HS29-060 - C33-62D with G60UHV-60D-135 COOLING CAPACITY - TXV Systems Only																										
63°F (17°C)	1800	850	60.0	17.6	4.50	.75	.87	.99	58.0	17.0	5.01	.76	.89	1.00	56.0	16.4	5.61	.77	.91	1.00	53.5	15.7	6.29	.78	.93	1.00
	2000	945	61.5	18.0	4.53	.77	.90	1.00	59.5	17.4	5.05	.78	.92	1.00	57.0	16.7	5.64	.79	.94	1.00	55.0	16.1	6.33	.81	.96	1.00
	2205	1040	63.0	18.5	4.55	.79	.93	1.00	60.5	17.7	5.07	.80	.95	1.00	58.5	17.1	5.67	.82	.97	1.00	56.0	16.4	6.36	.84	.99	1.00
67°F (19°C)	1800	850	63.0	18.5	4.56	.60	.72	.84	61.0	17.9	5.09	.61	.74	.86	59.0	17.3	5.69	.62	.75	.87	56.5	16.6	6.37	.62	.76	.89
	2000	945	64.5	18.9	4.59	.62	.74	.87	62.5	18.3	5.12	.62	.76	.89	60.0	17.6	5.72	.63	.77	.90	57.5	16.9	6.41	.64	.79	.93
	2205	1040	66.0	19.3	4.62	.63	.76	.90	63.5	18.6	5.15	.63	.78	.92	61.0	17.9	5.75	.64	.79	.94	58.5	17.1	6.45	.66	.81	.96
71°F (22°C)	1800	850	67.0	19.6	4.64	.47	.59	.70	64.5	18.9	5.18	.47	.59	.71	62.0	18.2	5.78	.47	.60	.72	59.5	17.4	6.48	.48	.61	.74
	2000	945	68.0	19.9	4.67	.47	.60	.72	66.0	19.3	5.21	.48	.61	.73	63.0	18.5	5.82	.48	.62	.75	61.0	17.9	6.51	.49	.63	.76
	2205	1040	69.0	20.2	4.70	.48	.62	.74	67.0	19.6	5.23	.48	.62	.76	64.5	18.9	5.84	.49	.63	.77	62.0	18.2	6.55	.49	.64	.79
HS29-060 - C33-62D with G61MPV-60D-135 COOLING CAPACITY - TXV Systems Only																										
63°F (17°C)	1785	845	60.0	17.6	4.49	.74	.87	.99	58.0	17.0	5.01	.76	.89	1.00	56.0	16.4	5.61	.77	.90	1.00	53.5	15.7	6.29	.78	.92	1.00
	2000	945	61.5	18.0	4.53	.77	.90	1.00	59.5	17.4	5.05	.78	.92	1.00	57.0	16.7	5.64	.79	.94	1.00	55.0	16.1	6.33	.81	.96	1.00
	2195	1035	63.0	18.5	4.55	.79	.93	1.00	60.5	17.7	5.08	.80	.95	1.00	58.5	17.1	5.67	.82	.97	1.00	56.0	16.4	6.36	.84	.99	1.00
67°F (19°C)	1785	845	63.0	18.5	4.56	.60	.72	.84	61.0	17.9	5.08	.61	.73	.85	58.5	17.1	5.68	.61	.74	.87	56.0	16.4	6.37	.62	.76	.89
	2000	945	64.5	18.9	4.59	.62	.74	.87	62.5	18.3	5.12	.62	.76	.89	60.0	17.6	5.72	.63	.77	.90	57.5	16.9	6.41	.64	.79	.93
	2195	1035	66.0	19.3	4.62	.63	.77	.90	63.5	18.6	5.15	.64	.78	.92	61.0	17.9	5.76	.65	.80	.94	59.0	17.3	6.45	.66	.81	.97
71°F (22°C)	1785	845	66.0	19.3	4.64	.47	.58	.70	64.5	18.9	5.17	.47	.59	.71	62.0	18.2	5.78	.47	.60	.72	59.5	17.4	6.47	.48	.61	.74
	2000	945	68.0	19.9	4.67	.48	.60	.72	66.0	19.3	5.21	.48	.61	.73	63.0	18.5	5.82	.48	.62	.75	61.0	17.9	6.51	.49	.63	.76
	2195	1035	69.0	20.2	4.70	.48	.62	.75	67.0	19.6	5.23	.49	.63	.76	64.5	18.9	5.85	.49	.63	.77	62.0	18.2	6.55	.50	.65	.79
HS29-060 - CR26-48N/W-F COOLING CAPACITY - TXV Systems Only																										
63°F (17°C)	1200	565	50.5	14.8	4.30	.69	.79	.89	49.0	14.4	4.81	.70	.80	.90	47.5	13.9	5.40	.70	.81	.92	45.5	13.3	6.06	.71	.82	.94
	1400	660	52.5	15.4	4.34	.71	.82	.92	51.0	14.9	4.85	.72	.83	.94	49.5	14.5	5.44	.73	.84	.95	47.5	13.9	6.11	.74	.86	.97
	1600	755	54.0	15.8	4.37	.73	.84	.95	52.5	15.4	4.88	.74	.86	.97	50.5	14.8	5.47	.75	.87	.99	49.0	14.4	6.15	.76	.89	.99
67°F (19°C)	1200	565	53.5	15.7	4.35	.57	.67	.76	52.0	15.2	4.87	.57	.67	.77	50.5	14.8	5.46	.57	.68	.78	48.5	14.2	6.14	.58	.69	.79
	1400	660	55.5	16.3	4.40	.58	.69	.78	54.0	15.8	4.92	.58	.69	.80	52.0	15.2	5.51	.59	.70	.81	50.0	14.7	6.19	.59	.71	.82
	1600	755	57.0	16.7	4.43	.59	.70	.81	55.5	16.3	4.95	.60	.71	.82	53.5	15.7	5.55	.60	.72	.84	51.5	15.1	6.22	.61	.74	.86
71°F (22°C)	1200	565	56.0	16.4	4.41	.44	.54	.64	54.5	16.0	4.93	.45	.55	.65	53.0	15.5	5.53	.45	.55	.65	51.0	14.9	6.21	.45	.56	.66
	1400	660	58.5	17.1	4.46	.45	.56	.66	56.5	16.6	4.98	.45	.57	.67	55.0	16.1	5.58	.46	.57	.68	53.0	15.5	6.27	.45	.58	.69
	1600	755	60.0	17.6	4.49	.46	.58	.68	58.5	17.1	5.02	.46	.58	.69	56.5	16.6	5.62	.47	.59	.70	54.0	15.8	6.31	.47	.59	.71
HS29-060 - CR26-60N-F ONLY COOLING CAPACITY - TXV Systems Only																										
63°F (17°C)	1800	850	57.5	16.9	4.43	.76	.89	.99	55.5	16.3	4.95	.77	.91	1.00	53.5	15.7	5.54	.79	.93	1.00	51.0	14.9	6.21	.80	.95	1.00
	2000	945	58.5	17.1	4.46	.78	.92	1.00	56.5	16.6	4.97	.80	.94	1.00	54.5	16.0	5.57	.81	.96	1.00	52.0	15.2	6.24	.83	.97	1.00
	2200	1040	59.5	17.4	4.48	.80	.95	1.00	57.5	16.9	5.00	.82	.97	1.00	55.5	16.3	5.59	.84	.98	1.00	53.0	15.5	6.27	.86	.99	1.00
67°F (19°C)	1800	850	60.5	17.7	4.50	.61	.74	.86	58.5	17.1	5.03	.62	.75	.88	56.5	16.6	5.62	.63	.76	.90	54.0	15.8	6.30	.64	.78	.92
	2000	945	61.5	18.0	4.53	.63	.76	.89	59.5	17.4	5.05	.63	.77	.91	57.5	16.9	5.65	.64	.79	.93	55.0	16.1	6.33	.65	.81	.95
	2200	1040	62.5	18.3	4.55	.64	.78	.92	60.5	17.7	5.07	.65	.80	.94	58.5	17.1	5.68	.66	.81	.96	56.0	16.4	6.35	.67	.83	.97
71°F (22°C)	1800	850	63.5	18.6	4.56	.47	.60	.72	61.5	18.0	5.09	.47	.60	.73	59.5	17.4	5.70	.48	.61	.74	57.0	16.7	6.39	.48	.62	.76
	2000	945	64.5	18.9	4.60	.48	.61	.74	62.5	18.3	5.13	.48	.62	.75	60.5	17.7	5.74	.48	.63	.77	58.0	17.0	6.43	.49	.64	.78
	2200	1040	66.0	19.3	4.62	.48	.63	.76	63.5	18.6	5.16	.49	.63	.77	61.5	18.0	5.76	.49	.65	.79	59.0	17.3	6.46	.50	.66	.81
HS29-060 - CR26-60W-F ONLY COOLING CAPACITY - TXV Systems Only																										
63°F (17°C)	1800	850	57.5	16.9	4.43	.76	.89	.99	55.5	16.3	4.95	.77	.91	1.00	53.5	15.7	5.54	.79	.93	1.00	51.0	14.9	6.21	.80	.95	1.00
	2000	945	58.5	17.1	4.46	.78	.92	1.00	56.5	16.6	4.97	.80	.94	1.00	54.5	16.0	5.57	.81	.96	1.00	52.0	15.2	6.24	.83	.97	1.00
	2200	1040	59.5	17.4	4.48	.80	.95	1.00	57.5	16.9	5.00	.82	.97	1.00	55.5	16.3	5.59	.84	.98	1.00	53.0	15.5	6.27	.86	.99	1.00
67°F (19°C)	1800	850	60.5	17.7	4.50	.61	.74	.86	58.5	17.1	5.03	.62	.75	.88	56.5	16.6	5.62	.63	.76	.90	54.0	15.8	6.30	.64	.78	.92
	2000	945	61.5	18.0	4.53	.63	.76	.89	59.5	17.4	5.05	.63	.77	.91	57.5	16.9	5.65	.64	.79	.93	55.0	16.1	6.33	.65	.81	.95
	2200	1040	62.5	18.3	4.55	.64	.78	.92	60.5	17.7	5.07	.65	.80	.94	58.5	17.1	5.68	.66	.81	.96	56.0	16.4	6.35	.67	.83	.97
71°F (22°C)	1800	850	63.5	18.6	4.56	.47	.60	.72	61.5	18.0	5.09	.47	.60	.73	59.5	17.4	5.70	.48	.61	.74	57.0	16.7	6.39	.48	.62	.76
	2000	945	64.5	18.9	4.60	.48	.61	.74	62.5	18.3	5.13	.48	.62	.75	60.5	17.7	5.74	.48	.63	.77	58.0	17.0	6.43	.49	.64	.78
	2200	1040	66.0	19.3	4.62	.48	.63	.76	63.5	18.6	5.16	.49	.63	.77	61.5	18.0	5.76	.49	.65	.79	59.0	17.3	6.46	.50	.66	.81
HS29-060 - CH23-51 COOLING CAPACITY - TXV Systems Only																										
63°F (17°C)	1600	755	55.0	16.1	4.38	.73	.85	.96	53.0	15.5	4.90	.74	.86	.98	51.0	14.9	5.48	.75	.88	.99	49.0	14.4	6.15	.76	.90	1.00
	1800	850	56.5	16.6	4.41	.75	.88	.99	54.5	16.0	4.92	.76	.90	1.00	52.0	15.2	5.51	.77	.91	1.00	50.0	14.7	6.19	.79	.93	1.00
	2000	945	57.5	16.9	4.43	.77	.91	1.00	55.5	16.3	4.95	.78	.93	1.00	53.5	15.7	5.54	.80	.94	1.00	51.0	14.9	6.21	.81	.96	1.00
67°F (19°C)	1600	755	58.0	17.0	4.44	.59	.71	.82	56.0	16.4	4.96	.59	.72	.83	54.0	15.8	5.56	.60	.73	.85	52.0	15.2	6.23	.61	.74	.87
	1800	850	59.5	17.4	4.48	.60	.73	.85	57.5	16.9	5.00	.61	.74	.86	55.5	16.3	5.59	.62	.75	.88	53.0	15.5	6.27	.63	.77	.90
	2000	945	60.5	17.7	4.50	.61	.75	.88	58.5	17.1	5.02	.62	.76	.90	56.5	16.6	5.62	.63	.77	.91	54.0	15.8	6.30	.64	.79	.93
71°F (22°C)	1600	755	61.0	17.9	4.51	.46	.57	.68	59.0	17.3	5.03	.46	.58	.69	57.0	16.7	5.64	.47	.59	.70	54.5	16.0	6.31	.47	.60	.72
	1800	850	62.5	18.3	4.54	.47	.59	.70	60.5	17.7	5.06	.47	.59	.72	58.0	17.0	5.67	.47	.60	.73	56.0	16.4	6.36	.48	.61	.74
	2000	945	63.5	18.6	4.57	.47	.60	.73	61.5	18.0	5.10	.48	.61	.74	59.5	17.4	5.70	.48	.62	.75	57.0	16.7	6.40	.48	.63	.77
HS29-060 - CH23-65 COOLING CAPACITY - TXV Systems Only																										
63°F (17°C)	1800	850	57.0	16.7	4.42	.75	.89	.99	55.0	16.1	4.94	.77	.90	1.00	52.5	15.4	5.53	.78	.92	1.00	50.5	14.8	6.20	.79	.94	1.00
	2000	945	58.0	17.0	4.45	.78	.92	1.00	56.0	16.4	4.97	.79	.93	1.00	54.0	15.8	5.55	.80	.95	1.00	51.5	15.1	6.22	.82	.97	1.00
	2200	1040	59.0	17.3	4.47	.80	.94	1.00	57.0	16.7	4.99	.81	.96	1.00	54.5	16.0	5.58	.83	.98	1.00	52.5	15.4	6.25	.85	.99	1.00
67°F (19°C)	1800	850	60.0	17.6	4.49	.60	.73	.85	58.0	17.0	5.01	.61	.74	.87	56.0	16.4	5.60	.62	.76	.89	53.5	15.7	6.29	.63	.77	.91
	2000	945	61.5	18.0	4.52	.62	.75	.88	59.0	17.3	5.04	.62	.77	.90	57.0	16.7	5.64	.63	.78	.92	54.5	16.0	6.32	.65	.80	.94
	2200	1040	62.5	18.3	4.54	.63	.77	.91	60.0	17.6	5.06	.64	.79	.93	58.0	17.0	5.66	.65	.80	.95	55.5	16.3	6.34	.66	.82	.97
71°F (22°C)	1800	850	63.0	18.5	4.56	.46	.59	.71	61.0	17.9	5.08	.47	.60	.72	59.0	17.3	5.69	.47	.60	.73	56.5	16.6	6.38	.48	.61	.75
	2000	945	64.5	18.9	4.58	.47	.60	.73	62.0	18.2	5.12	.48	.61	.74	60.0	17.6	5.72	.48	.62	.76	57.5	16.9	6.41	.48	.63	.77
	2200	1040	65.0	19.0	4.61	.48	.62	.75	63.5	18.6	5.14	.49	.63	.77	61.0	17.9	5.75	.49	.63	.78	58.5	17.1	6.44	.49	.65	.80

NOTE - For Temperatures and Capacities not shown in tables, see bulletin - Cooling Unit Rating Table Correction Factor Data in Miscellaneous Engineering Data section.

Entering Wet Bulb Temperature	Total Air Volume		Outdoor Air Temperature Entering Outdoor Coil: 85°F (29°C)						95°F (35°C)						105°F (41°C)						115°F (46°C)					
			Total Cooling Capacity		Comp Motor kW Input	Sensible To Total Ratio (S/T) Dry Bulb			Total Cooling Capacity		Comp Motor kW Input	Sensible To Total Ratio (S/T) Dry Bulb			Total Cooling Capacity		Comp Motor kW Input	Sensible To Total Ratio (S/T) Dry Bulb			Total Cooling Capacity		Comp Motor kW Input	Sensible To Total Ratio (S/T) Dry Bulb		
	cfm	L/s	kBtuh	kW		75°F 24°C	80°F 27°C	85°F 29°C	kBtuh	kW		75°F 24°C	80°F 27°C	85°F 29°C	kBtuh	kW		75°F 24°C	80°F 27°C	85°F 29°C	kBtuh	kW		75°F 24°C	80°F 27°C	85°F 29°C
HS29-060 - CH33-50/60C-2F COOLING CAPACITY - TXV Systems Only																										
63°F (17°C)	1600	755	58.0	17.0	4.44	.73	.85	.96	56.0	16.4	4.96	.74	.86	.98	53.5	15.7	5.55	.75	.88	1.00	51.5	15.1	6.22	.76	.89	1.00
	1800	850	59.5	17.4	4.48	.75	.88	.99	57.0	16.7	4.99	.76	.89	1.00	55.0	16.1	5.58	.77	.91	1.00	52.5	15.4	6.25	.78	.93	1.00
	2000	945	60.5	17.7	4.50	.77	.90	1.00	58.5	17.1	5.02	.78	.92	1.00	56.0	16.4	5.62	.79	.94	1.00	53.5	15.7	6.29	.81	.96	1.00
67°F (19°C)	1600	755	61.0	17.9	4.51	.59	.70	.81	59.0	17.3	5.04	.60	.71	.83	57.0	16.7	5.63	.60	.72	.84	54.5	16.0	6.32	.61	.74	.86
	1800	850	62.5	18.3	4.54	.60	.72	.84	60.5	17.7	5.07	.61	.74	.86	58.0	17.0	5.67	.62	.75	.88	56.0	16.4	6.36	.62	.76	.89
	2000	945	64.0	18.8	4.57	.61	.75	.87	61.5	18.0	5.10	.62	.76	.89	59.5	17.4	5.70	.63	.77	.91	57.0	16.7	6.39	.64	.79	.93
71°F (22°C)	1600	755	64.0	18.8	4.58	.47	.57	.68	62.0	18.2	5.11	.47	.58	.69	60.0	17.6	5.71	.47	.59	.70	57.5	16.9	6.40	.47	.59	.71
	1800	850	66.0	19.3	4.62	.47	.59	.70	63.5	18.6	5.15	.47	.59	.71	61.5	18.0	5.76	.47	.60	.72	59.0	17.3	6.45	.48	.61	.74
	2000	945	67.0	19.6	4.65	.47	.60	.72	65.0	19.0	5.18	.48	.61	.73	62.5	18.3	5.79	.48	.62	.75	60.0	17.6	6.49	.48	.62	.76
HS29-060 - CH33-60D-2F COOLING CAPACITY - TXV Systems Only																										
63°F (17°C)	1800	850	58.5	17.1	4.46	.74	.87	.99	56.5	16.6	4.98	.76	.89	1.00	54.5	16.0	5.57	.77	.90	1.00	52.0	15.2	6.24	.78	.92	1.00
	2000	945	60.0	17.6	4.49	.76	.90	1.00	58.0	17.0	5.01	.78	.91	1.00	55.5	16.3	5.60	.79	.93	1.00	53.5	15.7	6.28	.80	.96	1.00
	2200	1040	61.0	17.9	4.52	.78	.92	1.00	59.0	17.3	5.03	.80	.94	1.00	56.5	16.6	5.63	.81	.96	1.00	54.5	16.0	6.31	.83	.99	1.00
67°F (19°C)	1800	850	62.0	18.2	4.53	.60	.72	.84	60.0	17.6	5.06	.61	.73	.85	57.5	16.9	5.66	.61	.74	.87	55.5	16.3	6.34	.62	.76	.89
	2000	945	63.0	18.5	4.56	.61	.74	.86	61.0	17.9	5.09	.62	.75	.88	59.0	17.3	5.69	.63	.77	.90	56.5	16.6	6.37	.64	.78	.92
	2200	1040	64.5	18.9	4.58	.62	.76	.89	62.0	18.2	5.11	.63	.77	.91	60.0	17.6	5.72	.64	.79	.93	57.5	16.9	6.40	.65	.80	.95
71°F (22°C)	1800	850	65.0	19.0	4.60	.47	.58	.70	63.0	18.5	5.14	.47	.59	.71	61.0	17.9	5.74	.47	.60	.72	58.5	17.1	6.44	.48	.61	.73
	2000	945	66.0	19.3	4.64	.47	.60	.72	64.5	18.9	5.17	.48	.60	.73	62.0	18.2	5.78	.48	.61	.74	59.5	17.4	6.48	.48	.62	.76
	2200	1040	68.0	19.9	4.66	.48	.61	.73	65.0	19.0	5.20	.48	.62	.75	63.0	18.5	5.81	.49	.63	.76	60.5	17.7	6.50	.49	.64	.78
HS29-060 - CH33-62D-2F COOLING CAPACITY - TXV Systems Only																										
63°F (17°C)	1800	850	59.5	17.4	4.48	.74	.86	.98	57.5	16.9	5.00	.75	.88	1.00	55.5	16.3	5.59	.77	.90	1.00	53.0	15.5	6.27	.78	.92	1.00
	2000	945	61.0	17.9	4.51	.76	.89	1.00	59.0	17.3	5.03	.77	.91	1.00	56.5	16.6	5.62	.79	.93	1.00	54.0	15.8	6.31	.80	.95	1.00
	2200	1040	62.0	18.2	4.54	.78	.92	1.00	60.0	17.6	5.06	.79	.93	1.00	57.5	16.9	5.66	.81	.96	1.00	55.0	16.1	6.34	.82	.98	1.00
67°F (19°C)	1800	850	62.5	18.3	4.55	.60	.72	.83	60.5	17.7	5.07	.61	.73	.85	58.0	17.0	5.67	.61	.74	.87	56.0	16.4	6.36	.62	.76	.88
	2000	945	64.0	18.8	4.58	.61	.74	.86	62.0	18.2	5.11	.62	.75	.88	59.5	17.4	5.71	.63	.76	.89	57.0	16.7	6.39	.64	.78	.92
	2200	1040	65.0	19.0	4.61	.62	.76	.89	63.0	18.5	5.13	.63	.77	.90	60.5	17.7	5.74	.64	.78	.92	58.0	17.0	6.43	.65	.80	.95
71°F (22°C)	1800	850	66.0	19.3	4.62	.47	.59	.70	63.5	18.6	5.15	.47	.59	.71	61.5	18.0	5.77	.47	.60	.72	59.0	17.3	6.45	.48	.61	.73
	2000	945	67.0	19.6	4.66	.47	.60	.72	65.0	19.0	5.19	.48	.60	.73	62.5	18.3	5.80	.48	.61	.74	60.0	17.6	6.49	.48	.62	.75
	2200	1040	69.0	20.2	4.69	.48	.61	.73	66.0	19.3	5.22	.48	.62	.75	63.5	18.6	5.83	.49	.63	.76	61.0	17.9	6.53	.49	.64	.78
HS29-060 - CH23-68 COOLING CAPACITY - TXV Systems Only																										
63°F (17°C)	1800	850	59.5	17.4	4.48	.76	.89	1.00	57.5	16.9	5.00	.77	.91	1.00	55.5	16.3	5.60	.78	.93	1.00	53.0	15.5	6.27	.80	.95	1.00
	2000	945	61.0	17.9	4.51	.78	.92	1.00	59.0	17.3	5.03	.79	.94	1.00	56.5	16.6	5.63	.81	.96	1.00	54.5	16.0	6.31	.83	.98	1.00
	2200	1040	62.0	18.2	4.54	.80	.95	1.00	60.0	17.6	5.06	.82	.97	1.00	58.0	17.0	5.66	.84	.98	1.00	55.5	16.3	6.35	.85	1.00	1.00
67°F (19°C)	1800	850	63.0	18.5	4.55	.61	.73	.86	61.0	17.9	5.08	.62	.75	.88	58.5	17.1	5.68	.62	.76	.89	56.0	16.4	6.37	.63	.78	.91
	2000	945	64.5	18.9	4.59	.62	.76	.89	62.0	18.2	5.11	.63	.77	.91	60.0	17.6	5.72	.64	.79	.93	57.0	16.7	6.40	.65	.81	.95
	2200	1040	65.0	19.0	4.61	.63	.78	.92	63.5	18.6	5.14	.64	.80	.94	61.0	17.9	5.74	.66	.81	.96	58.0	17.0	6.43	.67	.83	.98
71°F (22°C)	1800	850	67.0	19.6	4.64	.46	.59	.71	64.5	18.9	5.17	.47	.60	.72	62.0	18.2	5.78	.48	.61	.74	59.5	17.4	6.46	.48	.62	.75
	2000	945	68.0	19.9	4.67	.47	.61	.74	66.0	19.3	5.20	.47	.62	.75	63.0	18.5	5.81	.49	.63	.76	60.5	17.7	6.51	.49	.64	.78
	2200	1040	69.0	20.2	4.70	.48	.62	.76	67.0	19.6	5.23	.48	.63	.77	64.0	18.8	5.84	.49	.64	.79	61.5	18.0	6.54	.50	.66	.81
HS29-060 - CH33-60D-2F with G61MPV-60D-135 COOLING CAPACITY - TXV Systems Only																										
63°F (17°C)	1785	845	58.5	17.1	4.46	.74	.87	.98	56.5	16.6	4.97	.75	.88	1.00	54.5	16.0	5.57	.76	.90	1.00	52.0	15.2	6.25	.78	.92	1.00
	2000	945	60.0	17.6	4.49	.76	.90	1.00	58.0	17.0	5.00	.78	.91	1.00	55.5	16.3	5.60	.79	.93	1.00	53.5	15.7	6.28	.80	.96	1.00
	2195	1035	61.0	17.9	4.52	.78	.92	1.00	59.0	17.3	5.03	.80	.94	1.00	56.5	16.6	5.63	.81	.97	1.00	54.5	16.0	6.31	.83	.99	1.00
67°F (19°C)	1785	845	61.5	18.0	4.53	.60	.72	.83	60.0	17.6	5.06	.60	.73	.85	57.5	16.9	5.66	.61	.74	.87	55.0	16.1	6.34	.62	.75	.88
	2000	945	63.0	18.5	4.56	.61	.74	.86	61.0	17.9	5.08	.62	.75	.88	59.0	17.3	5.69	.63	.76	.90	56.5	16.6	6.37	.63	.78	.92
	2195	1035	64.5	18.9	4.58	.63	.76	.89	62.0	18.2	5.11	.63	.78	.91	60.0	17.6	5.72	.64	.79	.93	57.5	16.9	6.40	.65	.81	.96
71°F (22°C)	1785	845	65.0	19.0	4.60	.47	.58	.69	63.0	18.5	5.13	.47	.59	.70	60.5	17.7	5.74	.47	.60	.72	58.0	17.0	6.44	.47	.60	.73
	2000	945	66.0	19.3	4.64	.47	.60	.72	64.5	18.9	5.17	.48	.60	.73	62.0	18.2	5.78	.48	.61	.74	59.5	17.4	6.48	.48	.62	.76
	2195	1035	68.0	19.9	4.66	.48	.61	.74	65.0	19.0	5.20	.49	.62	.75	63.0	18.5	5.81	.49	.63	.77	60.5	17.7	6.50	.49	.64	.78
HS29-060 - CH33-50/60C-2F with G60UHV-60C COOLING CAPACITY - TXV Systems Only																										
63°F (17°C)	1785	845	59.0	17.3	4.47	.75	.87	.99	57.0	16.7	4.99	.76	.89	1.00	55.0	16.1	5.58	.77	.91	1.00	52.5	15.4	6.25	.78	.93	1.00
	1985	935	60.5	17.7	4.50	.77	.90	1.00	58.0	17.0	5.02	.78	.92	1.00	56.0	16.4	5.61	.79	.94	1.00	53.5	15.7	6.29	.81	.96	1.00
	2180	1030	61.5	18.0	4.52	.78	.93	1.00	59.5	17.4	5.04	.80	.95	1.00	57.0	16.7	5.64	.81	.97	1.00	54.5	16.0	6.32	.83	.99	1.00
67°F (19°C)	1785	845	62.5	18.3	4.54	.60	.72	.84	60.5	17.7	5.07	.61	.73	.86	58.0	17.0	5.67	.61	.74	.87	55.5	16.3	6.36	.62	.76	.89
	1985	935	63.5	18.6	4.57	.61	.74	.87	61.5	18.0	5.09	.62	.76	.89	59.0	17.3	5.70	.63	.77	.90	57.0	16.7	6.39	.64	.78	.93
	2180	1030	65.0	19.0	4.59	.63	.76	.90	62.5	18.3	5.12	.63	.77	.91	60.5	17.7	5.73	.64	.79	.94	58.0	17.0	6.41	.65	.81	.96
71°F (22°C)	1785	845	66.0	19.3	4.61	.47	.59	.70	63.5	18.6	5.14	.47	.59	.71	61.0	17.9	5.76	.47	.60	.72	58.5	17.1	6.45	.48	.61	.74
	1985	935	67.0	19.6	4.65	.48	.60	.72	65.0	19.0	5.18	.48	.61	.73	62.5	18.3	5.79	.48	.61	.74	60.0	17.6	6.49	.48	.62	.76
	2180	1030	68.0	19.9	4.68	.48	.61	.74	66.0	19.3	5.21	.48	.62	.75	63.5	18.6	5.82	.48	.63	.76	61.0	17.9	6.52	.49	.64	.78
HS29-060 - CH33-50/60C-2F with G61MPV-60C COOLING CAPACITY - TXV Systems Only																										
63°F (17°C)	1765	835	59.0	17.3	4.47	.74	.87	.99	57.0	16.7	4.98	.75	.89	1.00	54.5	16.0	5.58	.77	.90	1.00	52.5	15.4	6.25	.78	.92	1.00
	1965	925	60.5	17.7	4.50	.76	.90	1.00	58.0	17.0	5.02	.78	.92	1.00	56.0	16.4	5.61	.79	.93	1.00	53.5	15.7	6.29	.81	.96	1.00
	2165	1020	61.5	18.0	4.53	.79	.93	1.00	59.5	17.4	5.04	.80	.95	1.00	57.0	16.7	5.64	.82	.97	1.00	54.5	16.0	6.33	.83	.99	1.00
67°F (19°C)	1765	835	62.0	18.2	4.54	.60	.72	.84	60.0	17.6	5.06	.60	.73	.85	58.0	17.0	5.66	.61	.74	.87	55.5	16.3	6.35	.62	.75	.89
	1965	925	63.5	18.6	4.57	.61	.74	.87	61.5	18.0	5.09	.62	.75	.88	59.0	17.3	5.70	.63	.77	.90	57.0	16.7	6.39	.64	.78	.92
	2165	1020	65.0	19.0	4.60	.63	.77	.90	62.5	18.3	5.12	.64	.78	.92	60.5	17.7	5.73	.64	.79	.94	58.0	17.0	6.42	.66	.81	.96
71°F (22°C)	1765	835	65.0	19.0	4.61	.47	.58	.69	63.5	18.6	5.14	.47	.59	.71	61.0	17.9	5.75	.47	.60	.72	58.5	17.1	6.44	.48	.60	.73
	1965	925	67.0	19.6	4.65	.48	.60	.72	64.5	18.9	5.18	.48	.61	.73	62.5	18.3	5.79	.48	.61	.74	60.0	17.6	6.49	.48	.62	.76
	2165	1020	68.0	19.9	4.68	.48	.62	.74	66.0	19.3	5.21	.49	.62	.76	63.5	18.6	5.82	.49	.63	.77	61.0	17.9	6.52	.50	.64	.78

NOTE - For Temperatures and Capacities not shown in tables, see bulletin - Cooling Unit Rating Table Correction Factor Data in Miscellaneous Engineering Data section.

Entering Wet Bulb Temperature	Total Air Volume		Outdoor Air Temperature Entering Outdoor Coil																							
			85°F (29°C)						95°F (35°C)						105°F (41°C)						115°F (46°C)					
			Total Cooling Capacity		Comp Motor kW Input	Sensible To Total Ratio (S/T) Dry Bulb			Total Cooling Capacity		Comp Motor kW Input	Sensible To Total Ratio (S/T) Dry Bulb			Total Cooling Capacity		Comp Motor kW Input	Sensible To Total Ratio (S/T) Dry Bulb			Total Cooling Capacity		Comp Motor kW Input	Sensible To Total Ratio (S/T) Dry Bulb		
	cfm	L/s	kBtuh	kW		75°F 24°C	80°F 27°C	85°F 29°C	kBtuh	kW		75°F 24°C	80°F 27°C	85°F 29°C	kBtuh	kW		75°F 24°C	80°F 27°C	85°F 29°C	kBtuh	kW		75°F 24°C	80°F 27°C	85°F 29°C
HS29-060 - CH33-60D-2F with G60UHV-60D-135 COOLING CAPACITY - TXV Systems Only																										
63°F (17°C)	1800	850	58.5	17.1	4.46	.74	.87	.99	56.5	16.6	4.98	.75	.89	1.00	54.5	16.0	5.57	.77	.90	1.00	52.0	15.2	6.24	.78	.92	1.00
	2000	945	60.0	17.6	4.49	.76	.90	1.00	58.0	17.0	5.00	.77	.91	1.00	55.5	16.3	5.60	.79	.93	1.00	53.5	15.7	6.28	.80	.96	1.00
	2205	1040	61.0	17.9	4.51	.78	.92	1.00	59.0	17.3	5.03	.79	.94	1.00	56.5	16.6	5.63	.81	.96	1.00	54.0	15.8	6.31	.83	.99	1.00
67°F (19°C)	1800	850	62.0	18.2	4.53	.60	.72	.84	60.0	17.6	5.06	.60	.73	.85	57.5	16.9	5.66	.61	.74	.87	55.5	16.3	6.35	.62	.76	.89
	2000	945	63.0	18.5	4.56	.61	.74	.86	61.0	17.9	5.08	.62	.75	.88	59.0	17.3	5.69	.62	.76	.90	56.5	16.6	6.36	.63	.78	.92
	2205	1040	64.0	18.8	4.58	.62	.76	.89	62.0	18.2	5.11	.63	.77	.91	59.5	17.4	5.72	.64	.78	.93	57.5	16.9	6.40	.65	.80	.95
71°F (22°C)	1800	850	65.0	19.0	4.60	.47	.58	.70	63.0	18.5	5.14	.47	.59	.71	61.0	17.9	5.74	.47	.60	.72	58.5	17.1	6.44	.48	.60	.73
	2000	945	66.0	19.3	4.64	.47	.60	.72	64.5	18.9	5.17	.48	.60	.73	62.0	18.2	5.78	.48	.61	.74	59.5	17.4	6.48	.48	.62	.76
	2205	1040	68.0	19.9	4.66	.48	.61	.73	65.0	19.0	5.20	.48	.62	.75	63.0	18.5	5.81	.48	.63	.76	60.5	17.7	6.50	.49	.64	.78
HS29-060 - CH33-62D-2F with G60UHV-60D-135 COOLING CAPACITY - TXV Systems Only																										
63°F (17°C)	1800	850	59.5	17.4	4.48	.74	.86	.98	57.5	16.9	5.00	.75	.88	1.00	55.5	16.3	5.59	.76	.90	1.00	53.0	15.5	6.27	.78	.92	1.00
	2000	945	61.0	17.9	4.51	.76	.89	1.00	59.0	17.3	5.03	.77	.91	1.00	56.5	16.6	5.62	.78	.92	1.00	54.0	15.8	6.30	.80	.95	1.00
	2205	1040	62.0	18.2	4.54	.78	.92	1.00	60.0	17.6	5.06	.79	.93	1.00	57.5	16.9	5.66	.81	.96	1.00	55.0	16.1	6.34	.82	.98	1.00
67°F (19°C)	1800	850	62.5	18.3	4.54	.60	.72	.83	60.5	17.7	5.07	.60	.73	.85	58.0	17.0	5.67	.61	.74	.86	56.0	16.4	6.36	.62	.75	.88
	2000	945	64.0	18.8	4.58	.61	.74	.86	62.0	18.2	5.10	.62	.75	.87	59.5	17.4	5.71	.62	.76	.89	57.0	16.7	6.39	.63	.78	.91
	2205	1040	65.0	19.0	4.61	.62	.76	.89	63.0	18.5	5.13	.63	.77	.90	60.5	17.7	5.74	.64	.78	.92	58.0	17.0	6.43	.65	.80	.95
71°F (22°C)	1800	850	66.0	19.3	4.62	.47	.58	.70	63.5	18.6	5.15	.47	.59	.71	61.5	18.0	5.76	.47	.60	.72	59.0	17.3	6.45	.48	.61	.73
	2000	945	67.0	19.6	4.66	.47	.60	.71	65.0	19.0	5.19	.48	.60	.73	62.5	18.3	5.80	.48	.61	.74	60.0	17.6	6.49	.48	.62	.75
	2205	1040	69.0	20.2	4.69	.48	.61	.73	66.0	19.3	5.22	.48	.62	.75	63.5	18.6	5.83	.48	.63	.76	61.0	17.9	6.53	.49	.64	.78
HS29-060 - CH33-62D-2F with G61MPV-60D-135 COOLING CAPACITY - TXV Systems Only																										
63°F (17°C)	1785	845	59.5	17.4	4.48	.74	.86	.98	57.5	16.9	4.99	.75	.88	.99	55.0	16.1	5.59	.76	.89	1.00	53.0	15.5	6.26	.77	.91	1.00
	2000	945	61.0	17.9	4.51	.76	.89	1.00	59.0	17.3	5.03	.77	.91	1.00	56.5	16.6	5.62	.78	.93	1.00	54.0	15.8	6.30	.80	.95	1.00
	2195	1035	62.5	18.3	4.54	.78	.92	1.00	60.0	17.6	5.06	.79	.94	1.00	57.5	16.9	5.66	.81	.96	1.00	55.0	16.1	6.34	.83	.98	1.00
67°F (19°C)	1785	845	62.5	18.3	4.54	.60	.72	.83	60.5	17.7	5.07	.60	.73	.84	58.0	17.0	5.67	.61	.74	.86	55.5	16.3	6.35	.62	.75	.88
	2000	945	64.0	18.8	4.58	.61	.74	.86	62.0	18.2	5.10	.62	.75	.88	59.5	17.4	5.71	.63	.76	.89	57.0	16.7	6.39	.63	.78	.92
	2195	1035	66.0	19.3	4.61	.62	.76	.89	63.0	18.5	5.14	.63	.77	.90	60.5	17.7	5.74	.64	.79	.93	58.0	17.0	6.43	.65	.80	.95
71°F (22°C)	1785	845	66.0	19.3	4.62	.47	.58	.69	63.5	18.6	5.15	.47	.59	.70	61.0	17.9	5.76	.47	.59	.71	58.5	17.1	6.45	.47	.60	.73
	2000	945	67.0	19.6	4.66	.47	.60	.71	65.0	19.0	5.19	.48	.60	.73	62.5	18.3	5.80	.48	.61	.74	60.0	17.6	6.49	.48	.62	.75
	2195	1035	69.0	20.2	4.69	.48	.61	.74	66.0	19.3	5.22	.48	.62	.75	64.0	18.8	5.83	.49	.63	.76	61.5	18.0	6.53	.49	.64	.78
HS29-060 - CB29M-51 - CB28UH-048 COOLING CAPACITY - TXV Systems Only																										
63°F (17°C)	1400	660	53.5	15.7	4.35	.72	.83	.94	51.5	15.1	4.86	.72	.84	.95	50.0	14.7	5.45	.73	.86	.97	47.5	13.9	6.12	.75	.87	.98
	1600	755	55.5	16.3	4.39	.74	.86	.97	53.5	15.7	4.90	.75	.87	.98	51.5	15.1	5.49	.76	.89	.99	49.0	14.4	6.16	.77	.91	1.00
	1800	850	56.5	16.6	4.42	.76	.89	.99	54.5	16.0	4.93	.77	.91	1.00	52.5	15.4	5.52	.78	.93	1.00	50.5	14.8	6.20	.80	.95	1.00
67°F (19°C)	1400	660	56.5	16.6	4.42	.58	.69	.80	54.5	16.0	4.93	.59	.70	.81	52.5	15.4	5.52	.59	.71	.82	50.5	14.8	6.20	.60	.72	.84
	1600	755	58.0	17.0	4.45	.60	.71	.83	56.5	16.6	4.97	.60	.72	.84	54.0	15.8	5.57	.61	.74	.86	52.0	15.2	6.24	.62	.75	.88
	1800	850	60.0	17.6	4.49	.61	.74	.86	57.5	16.9	5.00	.62	.75	.87	55.5	16.3	5.60	.63	.76	.89	53.5	15.7	6.28	.64	.78	.91
71°F (22°C)	1400	660	59.5	17.4	4.48	.46	.56	.67	57.5	16.9	5.00	.46	.57	.68	55.5	16.3	5.59	.46	.58	.68	53.0	15.5	6.28	.47	.58	.70
	1600	755	61.0	17.9	4.52	.47	.58	.69	59.0	17.3	5.04	.47	.59	.70	57.0	16.7	5.64	.47	.59	.71	55.0	16.1	6.33	.48	.60	.72
	1800	850	62.5	18.3	4.55	.48	.60	.71	60.5	17.7	5.08	.48	.60	.72	58.5	17.1	5.68	.48	.61	.74	56.0	16.4	6.37	.49	.62	.75
HS29-060 - CB29M-65 - CB28UH-060 COOLING CAPACITY - TXV Systems Only																										
63°F (17°C)	1600	755	55.0	16.1	4.39	.73	.86	.97	53.5	15.7	4.90	.74	.87	.98	51.5	15.1	5.49	.76	.89	.99	49.0	14.4	6.16	.77	.91	1.00
	1800	850	56.5	16.6	4.42	.76	.89	.99	54.5	16.0	4.93	.77	.90	1.00	52.5	15.4	5.52	.78	.92	1.00	50.5	14.8	6.19	.80	.94	1.00
	2000	945	58.0	17.0	4.44	.78	.92	1.00	56.0	16.4	4.96	.79	.94	1.00	53.5	15.7	5.55	.81	.95	1.00	51.5	15.1	6.22	.82	.97	1.00
67°F (19°C)	1600	755	58.0	17.0	4.45	.59	.71	.83	56.5	16.6	4.97	.60	.72	.84	54.0	15.8	5.56	.61	.73	.85	52.0	15.2	6.24	.61	.75	.87
	1800	850	60.0	17.6	4.49	.61	.73	.86	57.5	16.9	5.00	.62	.74	.87	55.5	16.3	5.59	.62	.76	.89	53.0	15.5	6.28	.63	.77	.91
	2000	945	61.0	17.9	4.51	.62	.76	.89	59.0	17.3	5.03	.63	.77	.90	56.5	16.6	5.62	.64	.78	.92	54.0	15.8	6.31	.65	.80	.94
71°F (22°C)	1600	755	61.0	17.9	4.51	.47	.58	.69	59.0	17.3	5.04	.47	.58	.70	57.0	16.7	5.64	.47	.59	.71	54.5	16.0	6.32	.47	.60	.72
	1800	850	62.5	18.3	4.55	.47	.59	.71	60.5	17.7	5.08	.48	.60	.72	58.5	17.1	5.68	.48	.61	.73	56.0	16.4	6.36	.48	.62	.75
	2000	945	64.0	18.8	4.57	.48	.61	.73	62.0	18.2	5.10	.48	.62	.74	59.5	17.4	5.71	.49	.63	.76	57.0	16.7	6.40	.49	.64	.78
HS29-060 - CB30M-51 - CB30U-51 COOLING CAPACITY - TXV Systems Only																										
63°F (17°C)	1400	660	54.5	16.0	4.38	.72	.83	.95	53.0	15.5	4.89	.73	.85	.96	50.5	14.8	5.48	.74	.86	.98	48.5	14.2	6.14	.75	.88	.99
	1600	755	56.5	16.6	4.42	.74	.87	.98	54.5	16.0	4.93	.75	.88	.99	52.0	15.2	5.51	.76	.90	1.00	50.0	14.7	6.18	.78	.92	1.00
	1800	850	58.0	17.0	4.44	.76	.90	1.00	55.5	16.3	4.96	.78	.92	1.00	53.5	15.7	5.55	.79	.94	1.00	51.0	14.9	6.21	.81	.96	1.00
67°F (19°C)	1400	660	57.5	16.9	4.44	.58	.69	.80	55.5	16.3	4.96	.59	.70	.81	53.5	15.7	5.55	.59	.71	.83	51.5	15.1	6.22	.60	.72	.85
	1600	755	59.5	17.4	4.48	.59	.72	.83	57.5	16.9	5.00	.60	.73	.85	55.0	16.1	5.59	.61	.74	.87	53.0	15.5	6.27	.62	.75	.89
	1800	850	61.0	17.9	4.51	.61	.74	.87	59.0	17.3	5.03	.62	.75	.89	56.5	16.6	5.62	.63	.77	.91	54.0	15.8	6.30	.63	.78	.93
71°F (22°C)	1400	660	60.5	17.7	4.50	.45	.56	.67	58.5	17.1	5.03	.46	.57	.68	56.5	16.6	5.62	.46	.57	.69	54.0	15.8	6.31	.46	.58	.70
	1600	755	62.5	18.3	4.55	.46	.58	.69	60.5	17.7	5.07	.46	.59	.70	58.0	17.0	5.67	.46	.59	.71	55.5	16.3	6.36	.47	.60	.73
	1800	850	64.0	18.8	4.58	.47	.60	.72	62.0	18.2	5.11	.47	.60	.73	59.5	17.4	5.71	.47	.61	.74	57.0	16.7	6.39	.48	.62	.76
HS29-060 - CB31MV-51 COOLING CAPACITY - TXV Systems Only																										
63°F (17°C)	1425	675	55.0	16.1	4.38	.72	.84	.95	53.0	15.5	4.89	.73	.85	.97	51.0	14.9	5.48	.74	.87	.98	48.5	14.2	6.15	.75	.89	.99
	1625	765	56.5	16.6	4.42	.74	.87	.99	54.5	16.0	4.93	.75	.89	1.00	52.5	15.4	5.51	.77	.90	1.00	50.0	14.7	6.19	.78	.93	1.00
	1805	850	58.0	17.0	4.44	.77	.90	1.00	56.0	16.4	4.96	.78	.92	1.00	53.5	15.7	5.55	.79	.94	1.00	51.0	14.9	6.22	.81	.96	1.00
67°F (19°C)	1425	675	58.0	17.0	4.45	.58	.69	.80	56.0	16.4	4.96	.59	.70	.82	54.0	15.8	5.55	.59	.71	.83	51.5	15.1	6.23	.60	.73	.85
	1625	765	59.5	17.4	4.48	.60	.72	.84	57.5	16.9	5.00	.60	.73	.85	55.5	16.3	5.60	.61	.74	.87	53.0	15.5	6.27	.62	.76	.89
	1805	850	61.0	17.9	4.51	.61	.74	.87	59.0	17.3	5.04	.62	.75	.89	56.5	16.6	5.63	.63	.77	.91	54.0	15.8	6.31	.64	.79	.93
71°F (22°C)	1425	675	61.0	17.9	4.51	.45	.56	.67	59.0	17.3	5.03	.45	.57	.68	56.5	16.6	5.63	.46	.58	.69	54.5	16.0	6.31	.46	.58	.70
	1625	765	62.5	18.3	4.55	.46	.58	.69	60.5	17.7	5.08	.46	.59	.71	58.5	17.1	5.67	.46	.59	.72	56.0	16.4	6.36	.47	.60	.73
	1805	850	64.0	18.8	4.58	.47	.60	.72	62.0	18.2	5.11	.47	.60	.73	59.5	17.4	5.71	.48	.61	.75	57.0	16.7	6.40	.48	.62	.76

NOTE - For Temperatures and Capacities not shown in tables, see bulletin - Cooling Unit Rating Table Correction Factor Data in Miscellaneous Engineering Data section.

Entering Wet Bulb Temperature	Total Air Volume		Outdoor Air Temperature Entering Outdoor Coil: 85°F (29°C)						95°F (35°C)						105°F (41°C)						115°F (46°C)					
			Total Cooling Capacity		Comp Motor kW Input	Sensible To Total Ratio (S/T) Dry Bulb			Total Cooling Capacity		Comp Motor kW Input	Sensible To Total Ratio (S/T) Dry Bulb			Total Cooling Capacity		Comp Motor kW Input	Sensible To Total Ratio (S/T) Dry Bulb			Total Cooling Capacity		Comp Motor kW Input	Sensible To Total Ratio (S/T) Dry Bulb		
	cfm	L/s	kBtuh	kW		75°F 24°C	80°F 27°C	85°F 29°C	kBtuh	kW		75°F 24°C	80°F 27°C	85°F 29°C	kBtuh	kW		75°F 24°C	80°F 27°C	85°F 29°C	kBtuh	kW		75°F 24°C	80°F 27°C	85°F 29°C
HS29-060 - CB30M-65 - CB30U-65 COOLING CAPACITY - TXV Systems Only																										
63°F (17°C)	1600	755	58.0	17.0	4.44	.73	.86	.97	56.0	16.4	4.96	.74	.87	.98	53.5	15.7	5.54	.75	.89	.99	51.5	15.1	6.22	.77	.91	1.00
	1800	850	59.5	17.4	4.48	.76	.89	.99	57.0	16.7	4.99	.77	.90	1.00	55.0	16.1	5.59	.78	.92	1.00	52.5	15.4	6.26	.79	.94	1.00
	2000	945	61.0	17.9	4.51	.78	.92	1.00	58.5	17.1	5.03	.79	.94	1.00	56.5	16.6	5.62	.81	.95	1.00	54.0	15.8	6.30	.82	.97	1.00
67°F (19°C)	1600	755	61.0	17.9	4.51	.59	.71	.82	59.0	17.3	5.03	.60	.72	.84	56.5	16.6	5.63	.61	.73	.85	54.5	16.0	6.31	.61	.75	.87
	1800	850	62.5	18.3	4.54	.61	.73	.85	60.5	17.7	5.07	.61	.74	.87	58.0	17.0	5.67	.62	.76	.89	55.5	16.3	6.35	.63	.77	.91
	2000	945	64.0	18.8	4.58	.62	.76	.89	61.5	18.0	5.10	.63	.77	.90	59.5	17.4	5.70	.64	.78	.92	57.0	16.7	6.39	.65	.80	.95
71°F (22°C)	1600	755	64.0	18.8	4.58	.46	.58	.69	62.0	18.2	5.11	.47	.58	.70	59.5	17.4	5.71	.47	.59	.71	57.0	16.7	6.40	.47	.60	.72
	1800	850	66.0	19.3	4.62	.47	.59	.71	63.5	18.6	5.15	.47	.60	.72	61.0	17.9	5.76	.48	.61	.73	58.5	17.1	6.45	.48	.62	.75
	2000	945	67.0	19.6	4.65	.48	.61	.74	65.0	19.0	5.19	.48	.62	.75	62.5	18.3	5.79	.49	.62	.76	60.0	17.6	6.49	.49	.64	.78
HS29-060 - CB31MV-65 COOLING CAPACITY - TXV Systems Only																										
63°F (17°C)	1625	765	58.0	17.0	4.45	.74	.86	.97	56.0	16.4	4.96	.75	.87	.99	54.0	15.8	5.55	.76	.89	1.00	51.5	15.1	6.22	.77	.91	1.00
	1805	850	59.5	17.4	4.48	.76	.89	.99	57.5	16.9	4.99	.77	.90	1.00	55.0	16.1	5.59	.78	.92	1.00	53.0	15.5	6.26	.79	.94	1.00
	2005	945	61.0	17.9	4.51	.78	.92	1.00	58.5	17.1	5.03	.79	.94	1.00	56.5	16.6	5.62	.81	.96	1.00	54.0	15.8	6.30	.82	.97	1.00
67°F (19°C)	1625	765	61.0	17.9	4.51	.59	.71	.83	59.0	17.3	5.04	.60	.72	.84	56.5	16.6	5.63	.61	.73	.86	54.5	16.0	6.31	.61	.75	.88
	1805	850	62.5	18.3	4.54	.61	.73	.86	60.5	17.7	5.07	.61	.74	.87	58.0	17.0	5.67	.62	.76	.89	55.5	16.3	6.35	.63	.77	.91
	2005	945	64.0	18.8	4.58	.62	.76	.89	61.5	18.0	5.10	.63	.77	.91	59.5	17.4	5.70	.64	.79	.93	57.0	16.7	6.39	.65	.80	.95
71°F (22°C)	1625	765	64.5	18.9	4.58	.46	.58	.69	62.0	18.2	5.11	.47	.58	.70	60.0	17.6	5.72	.47	.59	.71	57.5	16.9	6.40	.47	.60	.72
	1805	850	66.0	19.3	4.62	.47	.59	.71	63.5	18.6	5.15	.47	.60	.72	61.0	17.9	5.76	.47	.61	.73	58.5	17.1	6.45	.48	.62	.75
	2005	945	67.0	19.6	4.66	.48	.61	.74	65.0	19.0	5.19	.48	.62	.75	62.5	18.3	5.79	.49	.63	.76	60.0	17.6	6.48	.49	.64	.78
HS29-060 - CVP10-51/EC10Q4 COOLING CAPACITY - TXV Systems Only																										
63°F (17°C)	1500	710	53.5	15.7	4.36	.72	.84	.96	52.0	15.2	4.87	.73	.86	.97	50.0	14.7	5.45	.74	.87	.99	48.0	14.1	6.11	.76	.89	.99
	1700	800	55.0	16.1	4.39	.75	.88	.99	53.0	15.5	4.90	.76	.89	.99	51.0	14.9	5.48	.77	.91	1.00	49.0	14.4	6.16	.79	.93	1.00
	1900	895	56.0	16.4	4.41	.77	.91	1.00	54.5	16.0	4.92	.78	.92	1.00	52.5	15.4	5.51	.80	.94	1.00	50.0	14.7	6.18	.81	.96	1.00
67°F (19°C)	1500	710	57.0	16.7	4.43	.59	.70	.81	55.0	16.1	4.94	.59	.71	.82	53.0	15.5	5.54	.60	.72	.84	51.0	14.9	6.22	.60	.73	.86
	1700	800	58.5	17.1	4.46	.60	.72	.84	56.5	16.6	4.98	.61	.73	.86	54.5	16.0	5.57	.61	.75	.88	52.5	15.4	6.24	.62	.76	.90
	1900	895	59.5	17.4	4.48	.61	.74	.87	58.0	17.0	5.00	.62	.76	.89	55.5	16.3	5.60	.63	.77	.91	53.5	15.7	6.29	.64	.79	.93
71°F (22°C)	1500	710	60.0	17.6	4.50	.45	.57	.67	58.5	17.1	5.02	.46	.57	.68	56.5	16.6	5.62	.46	.58	.69	54.0	15.8	6.31	.46	.59	.71
	1700	800	61.5	18.0	4.53	.47	.59	.70	60.0	17.6	5.05	.46	.59	.71	58.0	17.0	5.66	.47	.60	.72	55.5	16.3	6.35	.47	.61	.73
	1900	895	63.0	18.5	4.55	.47	.60	.72	61.0	17.9	5.08	.48	.61	.73	59.0	17.3	5.69	.48	.62	.75	56.5	16.6	6.39	.48	.63	.76
HS29-060 - CVP10-65/EC10Q5 COOLING CAPACITY - TXV Systems Only																										
63°F (17°C)	1600	755	57.5	16.9	4.44	.74	.87	.98	55.5	16.3	4.96	.75	.88	.99	53.5	15.7	5.54	.76	.90	1.00	51.5	15.1	6.22	.77	.91	1.00
	1800	850	59.0	17.3	4.47	.76	.90	1.00	57.0	16.7	4.99	.78	.91	1.00	55.0	16.1	5.58	.79	.93	1.00	52.5	15.4	6.26	.81	.95	1.00
	2000	945	60.5	17.7	4.50	.79	.93	1.00	58.5	17.1	5.01	.80	.94	1.00	56.0	16.4	5.61	.82	.96	1.00	54.0	15.8	6.29	.83	.98	1.00
67°F (19°C)	1600	755	60.5	17.7	4.51	.60	.72	.83	58.5	17.1	5.03	.60	.72	.85	56.5	16.6	5.62	.61	.74	.86	54.5	16.0	6.31	.62	.75	.88
	1800	850	62.0	18.2	4.53	.61	.74	.87	60.0	17.6	5.06	.62	.75	.88	58.0	17.0	5.66	.63	.76	.90	55.5	16.3	6.35	.63	.78	.92
	2000	945	63.5	18.6	4.56	.63	.77	.90	61.0	17.9	5.09	.64	.78	.91	59.0	17.3	5.69	.64	.79	.93	56.5	16.6	6.38	.65	.81	.95
71°F (22°C)	1600	755	64.0	18.8	4.58	.47	.58	.69	62.0	18.2	5.11	.47	.59	.70	60.0	17.6	5.72	.47	.59	.71	57.5	16.9	6.41	.47	.60	.73
	1800	850	65.0	19.0	4.61	.47	.60	.72	63.5	18.6	5.15	.48	.60	.73	61.0	17.9	5.76	.48	.61	.74	58.5	17.1	6.45	.48	.62	.75
	2000	945	67.0	19.6	4.64	.48	.61	.74	64.5	18.9	5.18	.48	.62	.76	62.0	18.2	5.79	.49	.63	.77	59.5	17.4	6.47	.49	.64	.79
HS29-060 - C33-60D COOLING CAPACITY - RFC Systems Only																										
63°F (17°C)	1700	800	59.5	17.4	4.52	.74	.86	.98	57.5	16.9	5.06	.75	.88	1.00	55.0	16.1	5.67	.76	.90	1.00	52.5	15.4	6.38	.78	.92	1.00
	1900	895	61.0	17.9	4.55	.76	.89	1.00	59.0	17.3	5.10	.77	.91	1.00	56.5	16.6	5.70	.79	.93	1.00	54.0	15.8	6.41	.80	.95	1.00
	2100	990	62.0	18.2	4.58	.78	.92	1.00	60.0	17.6	5.11	.79	.94	1.00	57.5	16.9	5.74	.81	.96	1.00	55.0	16.1	6.44	.83	.98	1.00
67°F (19°C)	1700	800	62.5	18.3	4.59	.60	.72	.83	60.5	17.7	5.13	.60	.73	.85	58.5	17.1	5.76	.61	.74	.86	56.0	16.4	6.47	.62	.75	.88
	1900	895	64.0	18.8	4.62	.61	.74	.86	62.0	18.2	5.17	.62	.75	.88	59.5	17.4	5.79	.62	.76	.90	57.0	16.7	6.49	.63	.78	.92
	2100	990	65.0	19.0	4.65	.62	.76	.89	63.0	18.5	5.19	.63	.77	.91	60.5	17.7	5.81	.64	.79	.93	58.0	17.0	6.53	.65	.80	.95
71°F (22°C)	1700	800	66.0	19.3	4.67	.47	.58	.69	64.0	18.8	5.21	.47	.59	.70	61.5	18.0	5.84	.47	.60	.72	59.0	17.3	6.57	.48	.60	.73
	1900	895	68.0	19.9	4.70	.47	.59	.72	65.0	19.0	5.24	.48	.60	.73	63.0	18.5	5.89	.48	.61	.74	60.5	17.7	6.61	.48	.62	.75
	2100	990	69.0	20.2	4.72	.48	.61	.74	66.0	19.3	5.28	.48	.62	.75	64.0	18.8	5.91	.49	.63	.76	61.5	18.0	6.63	.49	.64	.78
HS29-060 - C33-62D COOLING CAPACITY - RFC Systems Only																										
63°F (17°C)	1800	850	61.0	17.9	4.56	.75	.87	.99	59.0	17.3	5.10	.76	.89	1.00	56.5	16.6	5.72	.77	.91	1.00	54.5	16.0	6.42	.79	.93	1.00
	2000	945	62.5	18.3	4.59	.77	.90	1.00	60.5	17.7	5.13	.78	.92	1.00	58.0	17.0	5.75	.79	.94	1.00	55.5	16.3	6.46	.81	.96	1.00
	2200	1040	63.5	18.6	4.61	.79	.93	1.00	61.5	18.0	5.16	.80	.95	1.00	59.0	17.3	5.78	.82	.97	1.00	56.5	16.6	6.48	.83	.99	1.00
67°F (19°C)	1800	850	64.0	18.8	4.63	.60	.72	.84	62.0	18.2	5.17	.61	.74	.86	59.5	17.4	5.79	.62	.75	.87	57.5	16.9	6.50	.62	.76	.89
	2000	945	66.0	19.3	4.66	.61	.74	.87	63.5	18.6	5.20	.62	.76	.89	61.0	17.9	5.83	.63	.77	.90	58.5	17.1	6.54	.64	.79	.93
	2200	1040	67.0	19.6	4.69	.63	.76	.90	64.5	18.9	5.23	.63	.78	.92	62.0	18.2	5.86	.65	.79	.94	59.5	17.4	6.58	.66	.81	.96
71°F (22°C)	1800	850	68.0	19.9	4.70	.47	.59	.70	65.0	19.0	5.25	.47	.59	.71	63.0	18.5	5.89	.48	.60	.72	60.5	17.7	6.61	.48	.61	.74
	2000	945	69.0	20.2	4.74	.48	.60	.72	67.0	19.6	5.28	.48	.61	.73	64.5	18.9	5.92	.48	.62	.75	61.5	18.0	6.64	.49	.63	.76
	2200	1040	70.0	20.5	4.76	.48	.62	.74	68.0	19.9	5.31	.48	.62	.75	65.0	19.0	5.94	.49	.63	.77	63.0	18.5	6.67	.49	.64	.79
HS29-060 - CR26-60W-F ONLY COOLING CAPACITY - RFC Systems Only																										
63°F (17°C)	1800	850	58.5	17.1	4.50	.76	.89	.99	56.5	16.6	5.03	.77	.91	1.00	54.5	16.0	5.66	.79	.93	1.00	52.0	15.2	6.34	.80	.95	1.00
	2000	945	59.5	17.4	4.53	.78	.92	1.00	57.5	16.9	5.06	.80	.94	1.00	55.5	16.3	5.68	.81	.96	1.00	53.0	15.5	6.37	.83	.97	1.00
	2200	1040	60.5	17.7	4.55	.80	.95	1.00	58.5	17.1	5.09	.82	.97	1.00	56.0	16.4	5.70	.84	.98	1.00	54.0	15.8	6.40	.86	.99	1.00
67°F (19°C)	1800	850	61.5	18.0	4.57	.61	.74	.86	59.5	17.4	5.11	.62	.75	.88	57.5	16.9	5.73	.63	.76	.90	55.0	16.1	6.44	.63	.78	.92
	2000	945	63.0	18.5	4.59	.63	.76	.89	60.5	17.7	5.13	.63	.77	.91	58.5	17.1	5.76	.64	.79	.93	56.0	16.4	6.46	.65	.81	.95
	2200	1040	64.0	18.8	4.62	.64	.78	.92	61.5	18.0	5.16	.65	.80	.94	59.5	17.4	5.79	.66	.81	.96	57.0	16.7	6.48	.67	.83	.97
71°F (22°C)	1800	850	64.5	18.9	4.64	.47	.60	.71	62.5	18.3	5.18	.47	.60	.73	60.0	17.6	5.80	.47	.61	.74	58.0	17.0	6.52	.48	.62	.76
	2000	945	66.0	19.3	4.66	.47	.61	.74	63.5	18.6	5.20	.48	.62	.75	61.5	18.0	5.84	.48	.63	.77	59.0	17.3	6.57	.49	.64	.78
	2200	1040	67.0	19.6	4.69	.48	.62	.76	64.5	18.9	5.23	.49	.64	.77	62.5	18.3	5.87	.49	.65	.79	60.0	17.6	6.58	.50	.66	.81

NOTE - For Temperatures and Capacities not shown in tables, see bulletin - Cooling Unit Rating Table Correction Factor Data in Miscellaneous Engineering Data section.

Entering Wet Bulb Temperature	Total Air Volume		Outdoor Air Temperature Entering Outdoor Coil																							
			85°F (29°C)						95°F (35°C)						105°F (41°C)						115°F (46°C)					
			Total Cooling Capacity		Comp Motor kW Input	Sensible To Total Ratio (S/T) Dry Bulb			Total Cooling Capacity		Comp Motor kW Input	Sensible To Total Ratio (S/T) Dry Bulb			Total Cooling Capacity		Comp Motor kW Input	Sensible To Total Ratio (S/T) Dry Bulb			Total Cooling Capacity		Comp Motor kW Input	Sensible To Total Ratio (S/T) Dry Bulb		
	cfm	L/s	kBtuh	kW		75°F 24°C	80°F 27°C	85°F 29°C	kBtuh	kW		75°F 24°C	80°F 27°C	85°F 29°C	kBtuh	kW		75°F 24°C	80°F 27°C	85°F 29°C	kBtuh	kW		75°F 24°C	80°F 27°C	85°F 29°C
HS29-060 - CH23-65 COOLING CAPACITY - RFC Systems Only																										
63°F (17°C)	1800	850	58.0	17.0	4.49	.75	.88	.99	55.5	16.3	5.03	.76	.90	1.00	53.5	15.7	5.64	.78	.92	1.00	51.0	14.9	6.33	.79	.94	1.00
	2000	945	59.0	17.3	4.51	.77	.91	1.00	57.0	16.7	5.05	.79	.93	1.00	54.5	16.0	5.66	.80	.95	1.00	52.0	15.2	6.35	.82	.97	1.00
	2200	1040	60.0	17.6	4.54	.80	.94	1.00	58.0	17.0	5.07	.81	.96	1.00	55.5	16.3	5.68	.83	.97	1.00	53.0	15.5	6.39	.85	.99	1.00
67°F (19°C)	1800	850	61.0	17.9	4.56	.60	.73	.85	59.0	17.3	5.10	.61	.74	.87	56.5	16.6	5.71	.62	.75	.89	54.0	15.8	6.41	.63	.77	.91
	2000	945	62.5	18.3	4.58	.61	.75	.88	60.0	17.6	5.12	.62	.76	.90	58.0	17.0	5.74	.63	.78	.92	55.5	16.3	6.45	.65	.80	.94
	2200	1040	63.5	18.6	4.61	.63	.77	.91	61.0	17.9	5.14	.63	.79	.93	59.0	17.3	5.77	.65	.80	.95	56.5	16.6	6.46	.66	.82	.97
71°F (22°C)	1800	850	64.0	18.8	4.62	.46	.59	.71	62.0	18.2	5.17	.47	.59	.72	59.5	17.4	5.80	.47	.60	.73	57.5	16.9	6.50	.48	.62	.75
	2000	945	65.0	19.0	4.65	.46	.60	.73	63.0	18.5	5.20	.47	.61	.74	61.0	17.9	5.82	.48	.62	.76	58.5	17.1	6.54	.49	.63	.77
	2200	1040	67.0	19.6	4.68	.48	.62	.75	64.5	18.9	5.22	.48	.62	.76	62.0	18.2	5.85	.49	.64	.78	59.5	17.4	6.56	.49	.65	.80
HS29-060 - CH33-60D-2F COOLING CAPACITY - RFC Systems Only																										
63°F (17°C)	1800	850	59.5	17.4	4.53	.74	.87	.99	57.5	16.9	5.06	.75	.88	1.00	55.5	16.3	5.68	.76	.90	1.00	53.0	15.5	6.37	.78	.92	1.00
	2000	945	61.0	17.9	4.55	.76	.90	1.00	58.5	17.1	5.10	.77	.91	1.00	56.5	16.6	5.70	.79	.93	1.00	54.0	15.8	6.41	.80	.95	1.00
	2200	1040	62.0	18.2	4.58	.78	.92	1.00	60.0	17.6	5.11	.79	.94	1.00	57.5	16.9	5.74	.81	.96	1.00	55.0	16.1	6.44	.83	.98	1.00
67°F (19°C)	1800	850	63.0	18.5	4.60	.60	.72	.84	61.0	17.9	5.14	.60	.73	.85	58.5	17.1	5.77	.61	.74	.87	56.0	16.4	6.48	.62	.75	.89
	2000	945	64.5	18.9	4.63	.61	.74	.86	62.0	18.2	5.17	.62	.75	.88	60.0	17.6	5.80	.63	.76	.90	57.5	16.9	6.50	.63	.78	.92
	2200	1040	65.0	19.0	4.65	.62	.76	.89	63.0	18.5	5.20	.63	.77	.91	61.0	17.9	5.82	.64	.78	.93	58.5	17.1	6.54	.65	.80	.95
71°F (22°C)	1800	850	66.0	19.3	4.67	.47	.58	.69	64.0	18.8	5.21	.47	.59	.71	62.0	18.2	5.85	.47	.60	.72	59.5	17.4	6.57	.48	.61	.73
	2000	945	68.0	19.9	4.70	.47	.60	.72	65.0	19.0	5.24	.48	.60	.73	63.0	18.5	5.89	.48	.61	.74	60.5	17.7	6.60	.48	.62	.76
	2200	1040	69.0	20.2	4.72	.48	.61	.74	66.0	19.3	5.27	.48	.62	.75	64.0	18.8	5.91	.49	.63	.76	61.5	18.0	6.63	.49	.64	.78
HS29-060 - CH33-62D-2F COOLING CAPACITY - RFC Systems Only																										
63°F (17°C)	1800	850	60.5	17.7	4.54	.74	.86	.98	58.5	17.1	5.08	.75	.88	1.00	56.0	16.4	5.70	.76	.90	1.00	53.5	15.7	6.40	.78	.92	1.00
	2000	945	62.0	18.2	4.58	.76	.89	1.00	59.5	17.4	5.11	.77	.91	1.00	57.5	16.9	5.73	.78	.92	1.00	55.0	16.1	6.43	.80	.95	1.00
	2200	1040	63.0	18.5	4.60	.78	.91	1.00	61.0	17.9	5.14	.79	.93	1.00	58.5	17.1	5.76	.80	.95	1.00	56.0	16.4	6.47	.82	.98	1.00
67°F (19°C)	1800	850	63.5	18.6	4.61	.60	.72	.83	61.5	18.0	5.15	.61	.73	.85	59.0	17.3	5.78	.61	.74	.86	56.5	16.6	6.48	.62	.75	.88
	2000	945	65.0	19.0	4.65	.61	.74	.86	63.0	18.5	5.18	.62	.75	.87	60.5	17.7	5.81	.63	.76	.89	58.0	17.0	6.52	.63	.78	.91
	2200	1040	66.0	19.3	4.67	.62	.76	.88	64.0	18.8	5.21	.63	.77	.90	61.5	18.0	5.84	.64	.78	.92	59.0	17.3	6.56	.65	.80	.94
71°F (22°C)	1800	850	67.0	19.6	4.69	.47	.58	.69	64.5	18.9	5.23	.47	.59	.70	62.5	18.3	5.87	.47	.60	.72	59.5	17.4	6.58	.48	.61	.73
	2000	945	68.0	19.9	4.72	.47	.60	.71	66.0	19.3	5.26	.48	.60	.73	63.5	18.6	5.90	.48	.61	.74	61.0	17.9	6.62	.48	.62	.75
	2200	1040	70.0	20.5	4.75	.48	.61	.73	67.0	19.6	5.29	.48	.62	.75	64.5	18.9	5.92	.49	.63	.76	62.0	18.2	6.66	.49	.64	.78
HS29-060 - CH23-68 COOLING CAPACITY - RFC Systems Only																										
63°F (17°C)	1800	850	60.5	17.7	4.55	.76	.89	1.00	58.5	17.1	5.09	.77	.91	1.00	56.0	16.4	5.70	.78	.92	1.00	54.0	15.8	6.40	.80	.94	1.00
	2000	945	62.0	18.2	4.58	.78	.92	1.00	59.5	17.4	5.11	.79	.94	1.00	57.5	16.9	5.74	.81	.96	1.00	55.0	16.1	6.44	.83	.97	1.00
	2200	1040	63.0	18.5	4.60	.80	.95	1.00	61.0	17.9	5.14	.82	.97	1.00	58.5	17.1	5.77	.83	.98	1.00	56.5	16.6	6.48	.85	1.00	1.00
67°F (19°C)	1800	850	64.0	18.8	4.62	.61	.73	.86	62.0	18.2	5.16	.61	.75	.87	59.5	17.4	5.78	.62	.76	.89	57.0	16.7	6.50	.63	.77	.91
	2000	945	65.0	19.0	4.65	.62	.76	.89	63.0	18.5	5.19	.63	.77	.91	60.5	17.7	5.82	.64	.79	.93	58.0	17.0	6.53	.65	.80	.95
	2200	1040	67.0	19.6	4.68	.63	.78	.92	64.5	18.9	5.22	.64	.79	.94	61.5	18.0	5.85	.65	.81	.96	59.0	17.3	6.56	.67	.83	.98
71°F (22°C)	1800	850	68.0	19.9	4.70	.47	.59	.71	65.0	19.0	5.25	.47	.60	.72	63.0	18.5	5.88	.47	.61	.74	60.5	17.7	6.59	.48	.62	.75
	2000	945	69.0	20.2	4.74	.47	.61	.73	67.0	19.6	5.28	.48	.62	.75	64.0	18.8	5.91	.48	.63	.76	61.5	18.0	6.64	.49	.64	.78
	2200	1040	70.0	20.5	4.76	.48	.62	.76	68.0	19.9	5.31	.49	.63	.77	65.0	19.0	5.94	.49	.64	.79	62.5	18.3	6.67	.49	.65	.81

NOTE - For Temperatures and Capacities not shown in tables, see bulletin - Cooling Unit Rating Table Correction Factor Data in Miscellaneous Engineering Data section.

Entering Wet Bulb Temperature	Total Air Volume		Outdoor Air Temperature Entering Outdoor Coil																							
			85°F (29°C)						95°F (35°C)						105°F (41°C)						115°F (46°C)					
			Total Cooling Capacity		Comp Motor kW Input	Sensible To Total Ratio (S/T) Dry Bulb			Total Cooling Capacity		Comp Motor kW Input	Sensible To Total Ratio (S/T) Dry Bulb			Total Cooling Capacity		Comp Motor kW Input	Sensible To Total Ratio (S/T) Dry Bulb			Total Cooling Capacity		Comp Motor kW Input	Sensible To Total Ratio (S/T) Dry Bulb		
	cfm	L/s	kBtuh	kW		75°F 24°C	80°F 27°C	85°F 29°C	kBtuh	kW		75°F 24°C	80°F 27°C	85°F 29°C	kBtuh	kW		75°F 24°C	80°F 27°C	85°F 29°C	kBtuh	kW		75°F 24°C	80°F 27°C	85°F 29°C
HS29-060 - C33-50/60C COOLING CAPACITY - TXV Systems Only																										
63°F (17°C)	1400	660	54.2	15.9	4.69	.69	.82	.93	51.8	15.2	5.05	.71	.83	.95	49.3	14.4	5.40	.72	.85	.97	46.5	13.6	5.77	.73	.87	.99
	1600	755	55.7	16.3	4.75	.72	.85	.97	53.1	15.6	5.11	.73	.87	.98	50.5	14.8	5.48	.75	.89	1.00	47.7	14.0	5.84	.77	.92	1.00
	1800	850	56.8	16.6	4.80	.74	.89	.99	54.2	15.9	5.17	.76	.91	1.00	51.5	15.1	5.54	.78	.93	1.00	48.6	14.2	5.92	.80	.95	1.00
67°F (19°C)	1400	660	57.8	16.9	4.85	.55	.67	.78	55.3	16.2	5.22	.56	.68	.80	52.5	15.4	5.60	.56	.69	.82	49.6	14.5	5.98	.57	.71	.84
	1600	755	59.2	17.3	4.90	.56	.69	.82	56.5	16.6	5.29	.57	.71	.84	53.6	15.7	5.67	.58	.72	.86	50.5	14.8	6.05	.59	.74	.88
	1800	850	60.2	17.6	4.95	.58	.72	.85	57.4	16.8	5.34	.59	.73	.87	54.5	16.0	5.72	.60	.75	.90	51.3	15.0	6.11	.61	.78	.92
71°F (22°C)	1400	660	61.8	18.1	5.02	.42	.53	.64	59.0	17.3	5.42	.42	.54	.65	56.1	16.4	5.82	.42	.55	.67	53.0	15.5	6.22	.43	.56	.68
	1600	755	63.1	18.5	5.08	.42	.55	.67	60.2	17.6	5.48	.43	.55	.68	57.2	16.8	5.89	.43	.56	.70	54.0	15.8	6.29	.43	.58	.72
	1800	850	64.1	18.8	5.12	.43	.56	.69	61.2	17.9	5.53	.43	.57	.71	58.1	17.0	5.94	.44	.58	.73	54.7	16.0	6.35	.44	.60	.75
HS29-060 - C33-60D COOLING CAPACITY - TXV Systems Only																										
63°F (17°C)	1700	800	57.1	16.7	4.73	.72	.86	.97	54.5	16.0	5.09	.74	.88	.99	51.8	15.2	5.46	.75	.90	1.00	48.9	14.3	5.82	.77	.92	1.00
	1900	895	58.2	17.1	4.78	.75	.89	1.00	55.5	16.3	5.14	.76	.91	1.00	52.7	15.4	5.51	.78	.93	1.00	49.8	14.6	5.88	.80	.96	1.00
	2100	990	59.1	17.3	4.81	.77	.92	1.00	56.4	16.5	5.19	.79	.94	1.00	53.6	15.7	5.56	.81	.96	1.00	50.7	14.9	5.95	.83	.98	1.00
67°F (19°C)	1700	800	60.8	17.8	4.88	.57	.70	.83	57.9	17.0	5.26	.57	.71	.85	55.0	16.1	5.65	.58	.73	.87	51.9	15.2	6.03	.60	.75	.89
	1900	895	61.7	18.1	4.93	.58	.72	.86	58.8	17.2	5.31	.59	.74	.88	55.9	16.4	5.69	.60	.76	.90	52.6	15.4	6.08	.61	.78	.93
	2100	990	62.5	18.3	4.96	.59	.75	.89	59.6	17.5	5.35	.60	.76	.91	56.5	16.6	5.73	.62	.79	.94	53.3	15.6	6.12	.63	.81	.96
71°F (22°C)	1700	800	64.7	19.0	5.06	.43	.55	.67	61.8	18.1	5.46	.43	.56	.69	58.7	17.2	5.86	.43	.57	.70	55.4	16.2	6.27	.44	.58	.72
	1900	895	65.7	19.3	5.10	.43	.56	.70	62.7	18.4	5.50	.43	.57	.71	59.6	17.5	5.91	.44	.59	.73	56.2	16.5	6.32	.44	.60	.76
	2100	990	66.5	19.5	5.13	.44	.58	.72	63.4	18.6	5.54	.44	.59	.74	60.2	17.6	5.95	.44	.60	.76	56.7	16.6	6.36	.45	.62	.79
HS29-060 - C33-62D - CH33-62D-2F - CH23-68 COOLING CAPACITY - TXV Systems Only																										
63°F (17°C)	1600	755	57.7	16.9	4.80	.71	.85	.96	55.1	16.1	5.16	.73	.86	.98	52.3	15.3	5.53	.74	.88	1.00	49.3	14.4	5.90	.76	.91	1.00
	1800	850	58.9	17.3	4.85	.74	.88	.99	56.2	16.5	5.22	.75	.90	1.00	53.3	15.6	5.60	.77	.92	1.00	50.3	14.7	5.97	.79	.95	1.00
	2000	945	60.0	17.6	4.89	.76	.91	1.00	57.2	16.8	5.27	.78	.93	1.00	54.3	15.9	5.65	.80	.95	1.00	51.3	15.0	6.04	.82	.98	1.00
67°F (19°C)	1600	755	61.5	18.0	4.96	.56	.69	.81	58.7	17.2	5.35	.57	.70	.83	55.7	16.3	5.73	.58	.72	.85	52.5	15.4	6.12	.59	.74	.88
	1800	850	62.6	18.3	5.01	.57	.71	.84	59.7	17.5	5.40	.58	.73	.87	56.6	16.6	5.79	.59	.75	.89	53.3	15.6	6.18	.61	.77	.92
	2000	945	63.6	18.6	5.05	.59	.74	.88	60.5	17.7	5.44	.60	.75	.90	57.4	16.8	5.84	.61	.77	.92	54.0	15.8	6.23	.62	.80	.95
71°F (22°C)	1600	755	65.7	19.3	5.14	.42	.54	.66	62.7	18.4	5.55	.43	.55	.67	59.5	17.4	5.96	.43	.56	.69	56.1	16.4	6.38	.43	.57	.71
	1800	850	66.8	19.6	5.19	.43	.56	.69	63.7	18.7	5.61	.43	.57	.70	60.4	17.7	6.02	.43	.58	.72	56.9	16.7	6.43	.44	.59	.74
	2000	945	67.7	19.8	5.23	.43	.57	.71	64.5	18.9	5.65	.44	.58	.73	61.2	17.9	6.07	.44	.60	.75	57.6	16.9	6.48	.45	.61	.77
HS29-060 - CR26-48N/W-F COOLING CAPACITY - TXV Systems Only																										
63°F (17°C)	1500	710	54.6	16.0	4.63	.71	.83	.95	52.2	15.3	4.98	.72	.85	.96	49.7	14.6	5.33	.73	.87	.98	47.0	13.8	5.69	.75	.89	1.00
	1700	800	55.8	16.4	4.68	.73	.87	.98	53.3	15.6	5.04	.74	.88	.99	50.7	14.9	5.40	.76	.91	1.00	47.9	14.0	5.76	.78	.93	1.00
	1900	895	56.8	16.6	4.72	.75	.90	1.00	54.3	15.9	5.08	.77	.92	1.00	51.6	15.1	5.45	.79	.94	1.00	48.8	14.3	5.82	.81	.96	1.00
67°F (19°C)	1500	710	58.2	17.1	4.78	.56	.68	.80	55.6	16.3	5.15	.56	.69	.82	52.9	15.5	5.52	.57	.71	.84	49.9	14.6	5.90	.58	.72	.86
	1700	800	59.2	17.3	4.83	.57	.70	.83	56.6	16.6	5.20	.58	.72	.85	53.8	15.8	5.57	.59	.73	.87	50.7	14.9	5.95	.60	.76	.90
	1900	895	60.1	17.6	4.86	.58	.73	.87	57.4	16.8	5.24	.59	.74	.89	54.5	16.0	5.62	.60	.76	.91	51.4	15.1	6.00	.62	.79	.93
71°F (22°C)	1500	710	62.0	18.2	4.94	.42	.54	.65	59.3	17.4	5.33	.42	.54	.67	56.4	16.5	5.73	.43	.55	.68	53.3	15.6	6.13	.43	.56	.70
	1700	800	63.1	18.5	4.99	.43	.55	.68	60.3	17.7	5.38	.43	.56	.69	57.3	16.8	5.78	.43	.57	.71	54.1	15.9	6.18	.44	.58	.73
	1900	895	64.0	18.8	5.02	.43	.57	.71	61.1	17.9	5.42	.43	.58	.72	58.1	17.0	5.83	.44	.59	.74	54.8	16.1	6.23	.44	.60	.76
HS29-060 - CR26-60N/W-F COOLING CAPACITY - TXV Systems Only																										
63°F (17°C)	1800	850	58.3	17.1	4.78	.74	.88	.99	55.6	16.3	5.15	.75	.90	1.00	52.8	15.5	5.52	.77	.92	1.00	49.9	14.6	5.89	.79	.95	1.00
	2000	945	59.3	17.4	4.83	.76	.91	1.00	56.6	16.6	5.20	.78	.93	1.00	53.8	15.8	5.57	.80	.95	1.00	50.8	14.9	5.96	.82	.98	1.00
	2200	1040	60.2	17.6	4.86	.79	.94	1.00	57.5	16.9	5.24	.81	.96	1.00	54.7	16.0	5.62	.83	.98	1.00	51.7	15.2	6.02	.85	1.00	1.00
67°F (19°C)	1800	850	61.8	18.1	4.93	.58	.71	.85	59.0	17.3	5.32	.58	.73	.87	56.0	16.4	5.71	.59	.75	.89	52.8	15.5	6.09	.61	.77	.92
	2000	945	62.7	18.4	4.97	.59	.74	.88	59.8	17.5	5.36	.60	.76	.90	56.7	16.6	5.75	.61	.78	.92	53.4	15.6	6.14	.63	.80	.95
	2200	1040	63.5	18.6	5.00	.60	.76	.91	60.5	17.7	5.40	.62	.78	.93	57.3	16.8	5.79	.63	.80	.95	54.0	15.8	6.18	.64	.83	.98
71°F (22°C)	1800	850	65.9	19.3	5.11	.43	.56	.69	62.9	18.4	5.52	.43	.57	.70	59.7	17.5	5.92	.44	.58	.72	56.3	16.5	6.33	.44	.59	.74
	2000	945	66.8	19.6	5.15	.43	.57	.72	63.7	18.7	5.56	.44	.59	.73	60.4	17.7	5.97	.44	.60	.75	57.0	16.7	6.38	.45	.61	.78
	2200	1040	67.5	19.8	5.18	.44	.59	.74	64.4	18.9	5.59	.44	.60	.76	61.0	17.9	6.00	.45	.62	.78	57.5	16.9	6.42	.45	.63	.81
HS29-060 - CH33-60D-2F - CH23-65 COOLING CAPACITY - TXV Systems Only																										
63°F (17°C)	1800	850	58.1	17.0	4.74	.75	.89	.99	55.5	16.3	5.10	.76	.91	1.00	52.8	15.5	5.47	.78	.93	1.00	49.9	14.6	5.84	.80	.95	1.00
	2000	945	59.1	17.3	4.78	.77	.92	1.00	56.5	16.6	5.15	.79	.94	1.00	53.7	15.7	5.53	.81	.96	1.00	50.8	14.9	5.91	.83	.98	1.00
	2200	1040	60.0	17.6	4.82	.80	.95	1.00	57.4	16.8	5.20	.82	.97	1.00	54.6	16.0	5.58	.84	.98	1.00	51.8	15.2	5.97	.86	1.00	1.00
67°F (19°C)	1800	850	61.5	18.0	4.88	.58	.72	.86	58.7	17.2	5.26	.59	.74	.88	55.7	16.3	5.64	.60	.76	.90	52.6	15.4	6.03	.61	.78	.93
	2000	945	62.3	18.3	4.92	.60	.75	.89	59.5	17.4	5.30	.61	.77	.91	56.5	16.6	5.69	.62	.79	.93	53.2	15.6	6.07	.63	.81	.96
	2200	1040	63.1	18.5	4.95	.61	.78	.92	60.2	17.6	5.34	.62	.79	.94	57.1	16.7	5.72	.64	.82	.96	53.8	15.8	6.11	.65	.84	.98
71°F (22°C)	1800	850	65.4	19.2	5.05	.43	.56	.70	62.5	18.3	5.45	.43	.57	.71	59.4	17.4	5.85	.44	.58	.73	56.0	16.4	6.26	.44	.60	.75
	2000	945	66.3	19.4	5.08	.44	.58	.73	63.3	18.6	5.49	.44	.59	.74	60.1	17.6	5.89	.44	.60	.76	56.6	16.6	6.30	.45	.62	.79
	2200	1040	67.0	19.6	5.11	.44	.60	.75	63.9	18.7	5.52	.45	.61	.77	60.6	17.8	5.93	.45	.62	.79	57.1	16.7	6.34	.46	.64	.82
HS29-060 - CB29M-51 - CB28UH-048 COOLING CAPACITY - TXV Systems Only																										
63°F (17°C)	1750	825	57.1	16.7	4.63	.74	.88	.98	54.6	16.0	4.98	.75	.89	1.00	52.0	15.2	5.33	.77	.91	1.00	49.1	14.4	5.70	.79	.94	1.00
	1800	850	57.4	16.8	4.64	.74	.88	.99	54.9	16.1	4.99	.76	.90	1.00	52.2	15.3	5.35	.77	.92	1.00	49.3	14.4	5.71	.79	.95	1.00
	1850	875	57.6	16.9	4.65	.75	.89	.99	55.1	16.1	5.00	.76	.91	1.00	52.4	15.4	5.36	.78	.93	1.00	49.6	14.5	5.73	.80	.95	1.00
67°F (19°C)	1750	825	60.6	17.8	4.77	.57	.71	.84	57.9	17.0	5.14	.58	.73	.86	55.0	16.1	5.51	.59	.74	.88	51.9	15.2	5.88	.60	.76	.91
	1800	850	60.8	17.8	4.78	.58	.72	.85	58.1	17.0	5.15	.59	.73	.87	55.2	16.2	5.52	.60	.75	.89	52.1	15.3	5.89	.61	.77	.92
	1850	875	61.0	17.9	4.79	.58	.72	.86	58.3	17.1	5.16	.59	.74	.88	55.4	16.2	5.53	.60	.76	.90	52.2	15.3	5.90	.61	.78	.93
71°F (22°C)	1750	825	64.5	18.9	4.93	.43	.56	.69	61.6	18.1	5.32	.43	.57	.70	58.6	17.2	5.71	.43	.58	.72	55.3	16.2	6.11	.44	.59	.74
	1800	850	64.7	19.0	4.94	.43	.56	.69	61.8	18.1	5.33	.43	.57	.71	58.8	17.2	5.72	.44	.58	.73	55.5	16.3	6.12	.44	.59	.75
	1850	875	64.9	19.0	4.95	.43	.57	.70	62.0	18.2	5.34	.43	.57	.71	59.0	17.3	5.73	.44	.59	.73	55.7	16.3	6.13	.44	.60	.76

NOTE - For Temperatures and Capacities not shown in tables, see bulletin - Cooling Unit Rating Table Correction Factor Data in Miscellaneous Engineering Data section.

Entering Wet Bulb Temperature	Total Air Volume		Outdoor Air Temperature Entering Outdoor Coil																							
			85°F (29°C)						95°F (35°C)						105°F (41°C)						115°F (46°C)					
			Total Cooling Capacity		Comp Motor kW Input	Sensible To Total Ratio (S/T) Dry Bulb			Total Cooling Capacity		Comp Motor kW Input	Sensible To Total Ratio (S/T) Dry Bulb			Total Cooling Capacity		Comp Motor kW Input	Sensible To Total Ratio (S/T) Dry Bulb			Total Cooling Capacity		Comp Motor kW Input	Sensible To Total Ratio (S/T) Dry Bulb		
	cfm	L/s	kBtuh	kW		75°F 24°C	80°F 27°C	85°F 29°C	kBtuh	kW		75°F 24°C	80°F 27°C	85°F 29°C	kBtuh	kW		75°F 24°C	80°F 27°C	85°F 29°C	kBtuh	kW		75°F 24°C	80°F 27°C	85°F 29°C
HS29-060 - CB29M-65 - CB28UH-060 COOLING CAPACITY - TXV Systems Only																										
63°F (17°C)	1600	755	56.6	16.6	4.59	.72	.85	.96	54.1	15.9	4.94	.73	.87	.98	51.5	15.1	5.29	.75	.89	.99	48.6	14.2	5.65	.76	.91	1.00
	1800	850	57.7	16.9	4.64	.74	.88	.99	55.1	16.1	4.99	.76	.90	1.00	52.4	15.4	5.35	.77	.92	1.00	49.6	14.5	5.71	.79	.95	1.00
	2000	945	58.6	17.2	4.68	.77	.91	1.00	56.0	16.4	5.04	.78	.93	1.00	53.3	15.6	5.40	.80	.95	1.00	50.5	14.8	5.77	.82	.97	1.00
67°F (19°C)	1600	755	60.1	17.6	4.74	.56	.69	.82	57.5	16.9	5.10	.57	.70	.84	54.7	16.0	5.47	.58	.72	.86	51.6	15.1	5.84	.59	.74	.88
	1800	850	61.1	17.9	4.78	.58	.72	.85	58.4	17.1	5.15	.59	.73	.87	55.5	16.3	5.52	.60	.75	.89	52.3	15.3	5.89	.61	.77	.92
	2000	945	61.9	18.1	4.81	.59	.74	.88	59.2	17.3	5.18	.60	.76	.90	56.2	16.5	5.56	.61	.78	.93	53.0	15.5	5.94	.63	.80	.95
71°F (22°C)	1600	755	64.0	18.8	4.90	.42	.55	.67	61.2	17.9	5.28	.43	.55	.68	58.3	17.1	5.67	.43	.56	.70	55.0	16.1	6.07	.43	.57	.72
	1800	850	65.0	19.0	4.94	.43	.56	.69	62.2	18.2	5.33	.43	.57	.71	59.1	17.3	5.72	.44	.58	.73	55.8	16.4	6.12	.44	.59	.75
	2000	945	65.8	19.3	4.97	.43	.58	.72	62.9	18.4	5.36	.44	.59	.74	59.8	17.5	5.76	.44	.60	.76	56.4	16.5	6.16	.45	.61	.78
HS29-060 - CB30M-51 - CB30U-51 COOLING CAPACITY - TXV Systems Only																										
63°F (17°C)	1400	660	55.2	16.2	4.56	.69	.81	.92	52.8	15.5	4.91	.70	.83	.94	50.1	14.7	5.25	.71	.85	.96	47.3	13.9	5.60	.73	.87	.99
	1600	755	56.7	16.6	4.62	.71	.85	.96	54.1	15.9	4.97	.73	.86	.98	51.3	15.0	5.32	.74	.88	1.00	48.4	14.2	5.69	.76	.91	1.00
	1800	850	57.8	16.9	4.67	.74	.88	.99	55.2	16.2	5.03	.75	.90	1.00	52.4	15.4	5.39	.77	.92	1.00	49.4	14.5	5.75	.79	.95	1.00
67°F (19°C)	1400	660	59.0	17.3	4.71	.55	.66	.78	56.4	16.5	5.08	.56	.67	.79	53.5	15.7	5.45	.56	.69	.81	50.5	14.8	5.82	.57	.70	.83
	1600	755	60.3	17.7	4.77	.56	.69	.81	57.6	16.9	5.15	.57	.70	.83	54.7	16.0	5.52	.58	.72	.85	51.5	15.1	5.89	.59	.74	.88
	1800	850	61.4	18.0	4.82	.58	.71	.85	58.6	17.2	5.19	.58	.73	.87	55.5	16.3	5.57	.59	.75	.89	52.3	15.3	5.95	.61	.77	.92
71°F (22°C)	1400	660	63.0	18.5	4.89	.42	.53	.64	60.2	17.6	5.28	.42	.54	.65	57.2	16.8	5.67	.42	.54	.66	54.1	15.9	6.06	.43	.55	.68
	1600	755	64.4	18.9	4.94	.42	.54	.66	61.5	18.0	5.34	.43	.55	.68	58.4	17.1	5.74	.43	.56	.69	55.1	16.1	6.13	.43	.57	.71
	1800	850	65.5	19.2	4.99	.43	.56	.69	62.5	18.3	5.39	.43	.57	.70	59.3	17.4	5.79	.44	.58	.72	55.9	16.4	6.19	.44	.59	.74
HS29-060 - CB31MV-51 COOLING CAPACITY - TXV Systems Only																										
63°F (17°C)	1425	675	55.3	16.2	4.57	.70	.82	.93	52.8	15.5	4.92	.71	.84	.95	50.1	14.7	5.27	.72	.86	.97	47.3	13.9	5.62	.74	.88	.99
	1625	765	56.5	16.6	4.62	.72	.85	.97	53.9	15.8	4.97	.73	.87	.98	51.2	15.0	5.33	.75	.89	1.00	48.3	14.2	5.68	.77	.91	1.00
	1805	850	57.6	16.9	4.66	.74	.88	.99	54.9	16.1	5.02	.75	.90	1.00	52.1	15.3	5.38	.77	.92	1.00	49.2	14.4	5.75	.79	.95	1.00
67°F (19°C)	1425	675	59.1	17.3	4.72	.55	.67	.79	56.4	16.5	5.09	.56	.68	.80	53.5	15.7	5.46	.56	.69	.82	50.5	14.8	5.83	.57	.71	.84
	1625	765	60.2	17.6	4.78	.56	.69	.82	57.4	16.8	5.15	.57	.70	.83	54.5	16.0	5.52	.58	.72	.86	51.4	15.1	5.89	.59	.74	.88
	1805	850	61.1	17.9	4.82	.58	.71	.85	58.3	17.1	5.19	.58	.73	.87	55.3	16.2	5.57	.59	.75	.89	52.0	15.2	5.94	.61	.77	.92
71°F (22°C)	1425	675	63.0	18.5	4.90	.42	.53	.64	60.2	17.6	5.29	.42	.54	.65	57.2	16.8	5.68	.42	.55	.67	54.0	15.8	6.07	.43	.56	.69
	1625	765	64.2	18.8	4.95	.42	.54	.66	61.3	18.0	5.34	.43	.55	.68	58.2	17.1	5.74	.43	.56	.70	54.9	16.1	6.13	.43	.57	.72
	1805	850	65.2	19.1	4.99	.43	.56	.69	62.2	18.2	5.39	.43	.57	.70	59.0	17.3	5.78	.44	.58	.72	55.6	16.3	6.18	.44	.59	.74
HS29-060 - CB30M-65 - CB30U-65 COOLING CAPACITY - TXV Systems Only																										
63°F (17°C)	1650	780	57.8	16.9	4.73	.72	.85	.97	55.1	16.1	5.09	.73	.87	.99	52.3	15.3	5.46	.75	.89	1.00	49.4	14.5	5.82	.77	.92	1.00
	1800	850	58.7	17.2	4.77	.74	.88	.99	56.0	16.4	5.14	.75	.90	1.00	53.1	15.6	5.50	.77	.92	1.00	50.1	14.7	5.87	.79	.95	1.00
	1950	920	59.4	17.4	4.80	.76	.90	1.00	56.7	16.6	5.17	.77	.92	1.00	53.8	15.8	5.55	.79	.95	1.00	50.8	14.9	5.92	.81	.97	1.00
67°F (19°C)	1650	780	61.5	18.0	4.89	.56	.69	.82	58.7	17.2	5.27	.57	.71	.84	55.7	16.3	5.65	.58	.72	.86	52.5	15.4	6.04	.59	.74	.89
	1800	850	62.3	18.3	4.92	.57	.71	.85	59.5	17.4	5.31	.58	.73	.87	56.3	16.5	5.69	.59	.75	.89	53.1	15.6	6.08	.61	.77	.92
	1950	920	63.0	18.5	4.95	.59	.73	.87	60.1	17.6	5.34	.59	.75	.89	56.9	16.7	5.73	.61	.77	.92	53.6	15.7	6.12	.62	.79	.94
71°F (22°C)	1650	780	65.6	19.2	5.07	.42	.55	.67	62.7	18.4	5.47	.43	.55	.68	59.5	17.4	5.88	.43	.56	.70	56.1	16.4	6.28	.43	.58	.72
	1800	850	66.4	19.5	5.10	.43	.56	.69	63.4	18.6	5.51	.43	.57	.70	60.1	17.6	5.92	.43	.58	.72	56.7	16.6	6.32	.44	.59	.74
	1950	920	67.1	19.7	5.13	.43	.57	.71	64.0	18.8	5.54	.44	.58	.72	60.7	17.8	5.95	.44	.59	.74	57.2	16.8	6.36	.44	.61	.77
HS29-060 - CB31MV-65 COOLING CAPACITY - TXV Systems Only																										
63°F (17°C)	1625	765	57.0	16.7	4.70	.71	.85	.96	54.4	15.9	5.05	.73	.86	.98	51.7	15.2	5.41	.74	.89	1.00	48.7	14.3	5.78	.76	.91	1.00
	1805	850	58.2	17.1	4.75	.74	.88	.99	55.6	16.3	5.11	.75	.90	1.00	52.7	15.4	5.48	.77	.92	1.00	49.8	14.6	5.85	.79	.95	1.00
	2005	945	59.2	17.3	4.79	.76	.91	1.00	56.5	16.6	5.16	.78	.93	1.00	53.7	15.7	5.53	.80	.95	1.00	50.7	14.9	5.91	.82	.98	1.00
67°F (19°C)	1625	765	60.8	17.8	4.85	.56	.69	.81	58.0	17.0	5.23	.57	.70	.83	55.0	16.1	5.61	.58	.72	.85	51.9	15.2	5.99	.59	.74	.88
	1805	850	61.8	18.1	4.90	.58	.71	.85	59.0	17.3	5.28	.58	.73	.87	55.9	16.4	5.67	.59	.75	.89	52.7	15.4	6.05	.61	.77	.92
	2005	945	62.7	18.4	4.94	.59	.74	.88	59.8	17.5	5.32	.60	.76	.90	56.7	16.6	5.71	.61	.78	.93	53.4	15.6	6.10	.63	.80	.95
71°F (22°C)	1625	765	64.8	19.0	5.03	.42	.54	.66	61.9	18.1	5.43	.43	.55	.68	58.8	17.2	5.83	.43	.56	.69	55.4	16.2	6.24	.43	.57	.71
	1805	850	65.9	19.3	5.08	.43	.56	.69	62.9	18.4	5.48	.43	.57	.70	59.7	17.5	5.89	.44	.58	.72	56.3	16.5	6.29	.44	.59	.74
	2005	945	66.8	19.6	5.11	.43	.57	.72	63.7	18.7	5.52	.44	.59	.73	60.4	17.7	5.93	.44	.60	.75	56.9	16.7	6.34	.45	.61	.78
HS29-060 - CVP10-51/EC10Q4 COOLING CAPACITY - TXV Systems Only																										
63°F (17°C)	1500	710	55.2	16.2	4.68	.70	.83	.94	52.7	15.4	5.03	.71	.85	.96	50.1	14.7	5.39	.73	.86	.98	47.3	13.9	5.75	.74	.89	1.00
	1700	800	56.4	16.5	4.73	.73	.86	.98	53.9	15.8	5.09	.74	.88	.99	51.2	15.0	5.46	.76	.90	1.00	48.4	14.2	5.82	.78	.93	1.00
	1900	895	57.5	16.9	4.78	.75	.89	1.00	54.9	16.1	5.15	.77	.91	1.00	52.2	15.3	5.51	.78	.94	1.00	49.3	14.4	5.89	.81	.96	1.00
67°F (19°C)	1500	710	58.8	17.2	4.83	.56	.68	.80	56.2	16.5	5.21	.56	.69	.81	53.4	15.6	5.58	.57	.70	.83	50.4	14.8	5.97	.58	.72	.86
	1700	800	60.0	17.6	4.89	.57	.70	.83	57.3	16.8	5.26	.58	.71	.85	54.4	15.9	5.64	.58	.73	.87	51.3	15.0	6.03	.60	.75	.90
	1900	895	61.0	17.9	4.93	.58	.73	.86	58.2	17.1	5.31	.59	.74	.88	55.2	16.2	5.69	.60	.76	.91	52.0	15.2	6.08	.62	.78	.93
71°F (22°C)	1500	710	62.8	18.4	5.00	.42	.54	.65	60.0	17.6	5.40	.42	.54	.66	57.1	16.7	5.80	.43	.55	.68	53.9	15.8	6.20	.43	.56	.69
	1700	800	64.0	18.8	5.05	.43	.55	.67	61.1	17.9	5.46	.43	.56	.69	58.1	17.0	5.86	.43	.57	.71	54.8	16.1	6.27	.44	.58	.73
	1900	895	65.0	19.0	5.10	.43	.57	.70	62.0	18.2	5.51	.43	.58	.72	58.9	17.3	5.91	.44	.59	.74	55.5	16.3	6.32	.44	.60	.76
HS29-060 - CVP10-65/EC10Q5 COOLING CAPACITY - TXV Systems Only																										
63°F (17°C)	1450	685	54.9	16.1	4.67	.71	.83	.94	52.5	15.4	5.03	.72	.85	.96	49.9	14.6	5.39	.73	.87	.98	47.1	13.8	5.75	.75	.89	1.00
	1650	780	56.3	16.5	4.73	.73	.87	.98	53.8	15.8	5.09	.74	.89	.99	51.1	15.0	5.46	.76	.91	1.00	48.3	14.2	5.83	.78	.93	1.00
	1850	875	57.4	16.8	4.78	.76	.90	1.00	54.8	16.1	5.15	.77	.92	1.00	52.1	15.3	5.52	.79	.94	1.00	49.3	14.4	5.90	.81	.97	1.00
67°F (19°C)	1450	685	58.5	17.1	4.83	.56	.68	.80	55.9	16.4	5.20	.56	.69	.81	53.1	15.6	5.58	.57	.70	.83	50.1	14.7	5.96	.58	.72	.86
	1650	780	59.8	17.5	4.88	.57	.70	.83	57.0	16.7	5.26	.58	.72	.85	54.2	15.9	5.64	.59	.74	.87	51.1	15.0	6.03	.60	.76	.90
	1850	875	60.7	17.8	4.92	.59	.73	.87	58.0	17.0	5.31	.60	.75	.89	55.0	16.1	5.69	.61	.77	.91	51.9	15.2	6.08	.62	.79	.94
71°F (22°C)	1450	685	62.5	18.3	5.00	.42	.54	.65	59.8	17.5	5.40	.42	.54	.66	56.8	16.6	5.80	.43	.55	.68	53.6	15.7	6.20	.43	.56	.70
	1650	780	63.8	18.7	5.05	.43	.55	.68	60.9	17.8	5.45	.43	.56	.69	57.8	16.9	5.86	.43	.57	.71	54.6	16.0	6.26	.44	.59	.73
	1850	875	64.7	19.0	5.09	.43	.57	.71	61.8	18.1	5.50	.44	.58	.72	58.6	17.2	5.91	.44	.59	.74	55.3	16.2	6.32	.45	.61	.77

NOTE - For Temperatures and Capacities not shown in tables, see bulletin - Cooling Unit Rating Table Correction Factor Data in Miscellaneous Engineering Data section.

Entering Wet Bulb Temperature	Total Air Volume		Outdoor Air Temperature Entering Outdoor Coil																									
			85°F (29°C)						95°F (35°C)						105°F (41°C)						115°F (46°C)					
			Total Cooling Capacity		Comp Motor kW Input	Sensible To Total Ratio (S/T) Dry Bulb			Total Cooling Capacity		Comp Motor kW Input	Sensible To Total Ratio (S/T) Dry Bulb			Total Cooling Capacity		Comp Motor kW Input	Sensible To Total Ratio (S/T) Dry Bulb			Total Cooling Capacity		Comp Motor kW Input	Sensible To Total Ratio (S/T) Dry Bulb		
	cfm	L/s	kBtuh	kW		75°F 24°C	80°F 27°C	85°F 29°C	kBtuh	kW		75°F 24°C	80°F 27°C	85°F 29°C	kBtuh	kW		75°F 24°C	80°F 27°C	85°F 29°C	kBtuh	kW		75°F 24°C	80°F 27°C	85°F 29°C
HS29-062 — C33-50/60C - TXV Systems Only																										
63°F (17°C)	1500	710	58.1	17.0	4.92	.69	.83	.95	56.0	16.4	5.47	.70	.85	.97	53.4	15.6	6.09	.72	.87	.99	50.4	14.8	6.78	.74	.89	1.00
	1700	800	59.5	17.4	4.96	.72	.87	.99	57.3	16.8	5.51	.73	.88	1.00	54.7	16.0	6.13	.75	.91	1.00	51.6	15.1	6.83	.77	.94	1.00
	1900	895	60.7	17.8	5.00	.75	.90	1.00	58.4	17.1	5.55	.76	.92	1.00	55.7	16.3	6.17	.78	.95	1.00	52.6	15.4	6.88	.81	.97	1.00
67°F (19°C)	1500	710	62.1	18.2	5.04	.55	.67	.79	59.7	17.5	5.59	.55	.68	.81	56.9	16.7	6.21	.56	.69	.83	53.6	15.7	6.92	.57	.71	.86
	1700	800	63.3	18.6	5.07	.56	.69	.83	60.8	17.8	5.62	.57	.71	.85	57.9	17.0	6.25	.57	.72	.87	54.5	16.0	6.96	.59	.75	.90
	1900	895	64.3	18.8	5.10	.57	.72	.87	61.8	18.1	5.66	.58	.74	.89	58.9	17.3	6.28	.59	.75	.91	55.3	16.2	6.99	.61	.78	.94
71°F (22°C)	1500	710	66.3	19.4	5.16	.41	.53	.64	63.8	18.7	5.72	.41	.53	.65	60.8	17.8	6.36	.41	.54	.67	57.2	16.8	7.08	.42	.55	.69
	1700	800	67.6	19.8	5.20	.42	.54	.67	64.9	19.0	5.76	.42	.55	.68	61.8	18.1	6.40	.42	.56	.70	58.2	17.1	7.11	.43	.57	.72
	1900	895	68.5	20.1	5.23	.42	.56	.70	65.8	19.3	5.79	.42	.57	.71	62.6	18.3	6.43	.43	.58	.73	58.9	17.3	7.15	.43	.59	.76
HS29-062 — C33-60D - TXV Systems Only																										
63°F (17°C)	1750	825	59.9	17.6	4.55	.73	.87	.99	57.6	16.9	5.05	.74	.89	1.00	55.0	16.1	5.62	.76	.91	1.00	51.9	15.2	6.26	.78	.94	1.00
	1950	920	61.0	17.9	4.58	.76	.91	1.00	58.7	17.2	5.08	.77	.92	1.00	56.0	16.4	5.65	.79	.95	1.00	52.9	15.5	6.30	.81	.97	1.00
	2150	1015	62.0	18.2	4.61	.78	.94	1.00	59.7	17.5	5.11	.80	.95	1.00	57.0	16.7	5.68	.82	.97	1.00	53.9	15.8	6.34	.84	.99	1.00
67°F (19°C)	1750	825	63.8	18.7	4.65	.57	.70	.84	61.3	18.0	5.16	.58	.72	.86	58.4	17.1	5.73	.58	.73	.88	55.0	16.1	6.39	.60	.75	.91
	1950	920	64.7	19.0	4.67	.58	.73	.87	62.2	18.2	5.18	.59	.74	.89	59.2	17.3	5.76	.60	.76	.91	55.8	16.4	6.41	.61	.79	.94
	2150	1015	65.6	19.2	4.70	.60	.76	.91	63.0	18.5	5.21	.61	.77	.92	59.9	17.6	5.78	.62	.79	.95	56.4	16.5	6.44	.63	.82	.97
71°F (22°C)	1750	825	68.1	20.0	4.76	.42	.55	.68	65.5	19.2	5.28	.43	.56	.69	62.4	18.3	5.86	.43	.57	.71	58.7	17.2	6.52	.43	.58	.73
	1950	920	69.1	20.3	4.79	.43	.57	.71	66.4	19.5	5.31	.43	.58	.72	63.2	18.5	5.89	.44	.59	.74	59.4	17.4	6.55	.44	.60	.76
	2150	1015	69.9	20.5	4.81	.43	.58	.73	67.1	19.7	5.33	.44	.59	.75	63.8	18.7	5.92	.44	.61	.77	60.0	17.6	6.58	.45	.62	.80
HS29-062 — C33-62D - CH33-62D-2F - CH23-68 - TXV Systems Only																										
63°F (17°C)	1600	755	62.0	18.2	4.99	.71	.85	.97	59.6	17.5	5.54	.72	.86	.99	56.8	16.6	6.16	.73	.89	1.00	53.6	15.7	6.87	.75	.91	1.00
	1800	850	63.3	18.6	5.03	.73	.88	1.00	60.9	17.8	5.58	.74	.90	1.00	58.1	17.0	6.20	.76	.92	1.00	54.7	16.0	6.92	.79	.95	1.00
	2000	945	64.5	18.9	5.06	.76	.92	1.00	62.0	18.2	5.62	.77	.94	1.00	59.1	17.3	6.25	.79	.96	1.00	55.7	16.3	6.96	.82	.98	1.00
67°F (19°C)	1600	755	66.2	19.4	5.11	.55	.68	.81	63.6	18.6	5.66	.56	.69	.83	60.6	17.8	6.30	.57	.71	.85	57.0	16.7	7.01	.58	.73	.88
	1800	850	67.4	19.8	5.14	.57	.71	.85	64.7	19.0	5.70	.58	.72	.87	61.6	18.1	6.33	.59	.74	.89	57.9	17.0	7.05	.60	.76	.92
	2000	945	68.4	20.0	5.18	.58	.73	.88	65.7	19.3	5.73	.59	.75	.90	62.4	18.3	6.37	.60	.77	.93	58.6	17.2	7.08	.62	.80	.96
71°F (22°C)	1600	755	70.8	20.7	5.25	.42	.54	.65	68.0	19.9	5.80	.42	.54	.67	64.7	19.0	6.45	.42	.55	.68	60.9	17.8	7.17	.42	.56	.70
	1800	850	72.0	21.1	5.28	.42	.55	.68	69.1	20.3	5.85	.42	.56	.69	65.7	19.3	6.49	.43	.57	.71	61.7	18.1	7.21	.43	.58	.74
	2000	945	72.9	21.4	5.31	.43	.57	.71	70.1	20.5	5.87	.43	.58	.72	66.6	19.5	6.52	.43	.59	.74	62.4	18.3	7.24	.44	.60	.77
HS29-062 — CR26-48N/W-F - TXV Systems Only																										
63°F (17°C)	1500	710	55.2	16.2	4.91	.71	.84	.96	53.2	15.6	5.45	.72	.86	.97	50.9	14.9	6.07	.74	.87	.99	48.1	14.1	6.78	.75	.90	1.00
	1700	800	56.4	16.5	4.94	.73	.87	.99	54.3	15.9	5.49	.75	.89	1.00	51.9	15.2	6.11	.76	.91	1.00	49.0	14.4	6.83	.78	.93	1.00
	1900	895	57.4	16.8	4.97	.76	.90	1.00	55.3	16.2	5.52	.77	.92	1.00	52.9	15.5	6.15	.79	.94	1.00	50.0	14.7	6.87	.81	.96	1.00
67°F (19°C)	1500	710	59.1	17.3	5.01	.56	.69	.81	56.9	16.7	5.57	.57	.70	.82	54.3	15.9	6.20	.57	.71	.84	51.3	15.0	6.92	.58	.72	.86
	1700	800	60.2	17.6	5.05	.57	.71	.84	57.9	17.0	5.60	.58	.72	.86	55.3	16.2	6.24	.59	.73	.88	52.1	15.3	6.95	.60	.76	.90
	1900	895	61.1	17.9	5.07	.59	.73	.87	58.8	17.2	5.63	.59	.75	.89	56.1	16.4	6.27	.60	.76	.91	52.9	15.5	6.97	.62	.78	.94
71°F (22°C)	1500	710	63.1	18.5	5.13	.43	.54	.66	60.8	17.8	5.69	.43	.55	.67	58.1	17.0	6.34	.43	.55	.68	54.8	16.1	7.06	.43	.57	.70
	1700	800	64.2	18.8	5.17	.43	.56	.68	61.9	18.1	5.73	.43	.56	.69	59.0	17.3	6.37	.43	.57	.71	55.7	16.3	7.10	.44	.58	.73
	1900	895	65.2	19.1	5.19	.44	.57	.71	62.7	18.4	5.76	.44	.58	.72	59.8	17.5	6.40	.44	.59	.74	56.4	16.5	7.13	.45	.60	.76
HS29-062 — CR26-60N/W-F - TXV Systems Only																										
63°F (17°C)	1800	850	59.1	17.3	4.99	.75	.89	1.00	56.9	16.7	5.54	.76	.91	1.00	54.3	15.9	6.15	.78	.93	1.00	51.2	15.0	6.86	.80	.95	1.00
	2000	945	60.1	17.6	5.02	.77	.92	1.00	57.9	17.0	5.57	.79	.94	1.00	55.3	16.2	6.19	.81	.96	1.00	52.2	15.3	6.91	.83	.98	1.00
	2200	1040	61.1	17.9	5.05	.80	.95	1.00	58.8	17.2	5.60	.81	.97	1.00	56.2	16.5	6.23	.83	.98	1.00	53.2	15.6	6.94	.86	1.00	1.00
67°F (19°C)	1800	850	62.8	18.4	5.10	.58	.72	.86	60.4	17.7	5.65	.59	.74	.88	57.5	16.9	6.28	.60	.75	.90	54.1	15.9	6.99	.61	.78	.92
	2000	945	63.7	18.7	5.12	.59	.75	.89	61.2	17.9	5.68	.60	.76	.91	58.3	17.1	6.31	.62	.78	.93	54.8	16.1	7.02	.63	.81	.96
	2200	1040	64.5	18.9	5.14	.61	.78	.92	61.9	18.1	5.70	.62	.79	.94	58.9	17.3	6.33	.63	.81	.96	55.4	16.2	7.05	.65	.84	.99
71°F (22°C)	1800	850	67.1	19.7	5.23	.43	.56	.70	64.5	18.9	5.79	.43	.57	.71	61.3	18.0	6.43	.44	.58	.73	57.7	16.9	7.15	.44	.60	.75
	2000	945	67.9	19.9	5.25	.44	.58	.72	65.3	19.1	5.81	.44	.59	.74	62.1	18.2	6.46	.44	.60	.76	58.4	17.1	7.18	.45	.62	.78
	2200	1040	68.7	20.1	5.28	.44	.60	.75	65.9	19.3	5.84	.44	.61	.77	62.7	18.4	6.48	.45	.62	.79	58.9	17.3	7.20	.46	.64	.82
HS29-062 — CH33-60D-2F - CH23-65 - TXV Systems Only																										
63°F (17°C)	1800	850	59.9	17.6	4.97	.76	.90	1.00	57.7	16.9	5.52	.77	.92	1.00	55.1	16.1	6.14	.79	.94	1.00	52.1	15.3	6.85	.81	.96	1.00
	2000	945	61.0	17.9	5.00	.78	.93	1.00	58.7	17.2	5.55	.80	.95	1.00	56.1	16.4	6.18	.82	.97	1.00	53.1	15.6	6.88	.84	.99	1.00
	2200	1040	62.0	18.2	5.03	.81	.96	1.00	59.8	17.5	5.58	.82	.97	1.00	57.2	16.8	6.20	.84	.99	1.00	54.1	15.9	6.92	.87	1.00	1.00
67°F (19°C)	1800	850	63.5	18.6	5.07	.59	.73	.87	61.1	17.9	5.62	.59	.74	.89	58.2	17.1	6.25	.60	.76	.91	54.8	16.1	6.96	.62	.78	.93
	2000	945	64.4	18.9	5.10	.60	.76	.90	61.9	18.1	5.65	.61	.77	.92	59.0	17.3	6.28	.62	.79	.94	55.5	16.3	6.99	.64	.82	.96
	2200	1040	65.2	19.1	5.12	.62	.79	.93	62.6	18.3	5.67	.63	.80	.95	59.7	17.5	6.30	.64	.82	.97	56.2	16.5	7.02	.66	.85	.99
71°F (22°C)	1800	850	67.7	19.8	5.19	.43	.57	.71	65.1	19.1	5.75	.43	.58	.72	62.0	18.2	6.39	.44	.59	.74	58.4	17.1	7.11	.44	.60	.76
	2000	945	68.6	20.1	5.22	.44	.59	.73	65.9	19.3	5.78	.44	.60	.75	62.8	18.4	6.42	.45	.61	.77	59.0	17.3	7.15	.45	.63	.79
	2200	1040	69.3	20.3	5.24	.44	.60	.76	66.6	19.5	5.80	.45	.61	.78	63.3	18.6	6.44	.45	.63	.80	59.6	17.5	7.16	.46	.65	.83
HS29-062 — CB30M-51 - CB30U-51 - TXV Systems Only																										
63°F (17°C)	1400	660	56.6	16.6	4.03	.68	.81	.93	54.5	16.0	4.48	.69	.83	.95	52.0	15.2	4.99	.71	.85	.97	49.0	14.4	5.56	.72	.87	.99
	1600	755	58.1	17.0	4.07	.71	.85	.97	55.9	16.4	4.52	.72	.86	.98	53.3	15.6	5.03	.73	.88	1.00	50.2	14.7	5.60	.76	.91	1.00
	1800	850	59.3	17.4	4.11	.73	.88	1.00	57.1	16.7	4.55	.75	.90	1.00	54.4	15.9	5.06	.77	.92	1.00	51.3	15.0	5.65	.79	.95	1.00
67°F (19°C)	1400	660	60.6	17.8	4.13	.54	.66	.77	58.3	17.1	4.59	.55	.67	.79	55.6	16.3	5.09	.55	.68	.81	52.3	15.3	5.68	.56	.70	.83
	1600	755	62.0	18.2	4.17	.55	.68	.81	59.6	17.5	4.62	.56	.69	.83	56.8	16.6	5.14	.57	.71	.85	53.4	15.6	5.72	.58	.73	.88
	1800	850	63.1	18.5	4.20	.57	.71	.85	60.6	17.8	4.65	.58	.72	.87	57.7	16.9	5.17	.58	.74	.89	54.2	15.9	5.75	.60	.76	.92
71°F (22°C)	1400	660	64.9	19.0	4.24	.41	.52	.63	62.4	18.3	4.70	.41	.53	.64	59.5	17.4	5.22	.42	.53	.65	56.0	16.4	5.81	.42	.54	.67
	1600	755	66.3	19.4	4.28	.42	.54	.65	63.7	18.7	4.74	.42	.54	.67	60.6	17.8	5.26	.42	.55	.68	57.1	16.7	5.85	.43	.56	.70
	1800	850	67.4	19.8	4.31	.42	.55	.68	64.7	19.0	4.77	.42	.56	.70	61.6	18.1	5.29	.43	.57	.71	57.8	16.9	5.88	.43	.58	.74

NOTE - For Temperatures and Capacities not shown in tables, see bulletin - Cooling Unit Rating Table Correction Factor Data in Miscellaneous Engineering Data section.

Entering Wet Bulb Temperature	Total Air Volume		Outdoor Air Temperature Entering Outdoor Coil																							
			85°F (29°C)						95°F (35°C)						105°F (41°C)						115°F (46°C)					
			Total Cooling Capacity		Comp Motor kW Input	Sensible To Total Ratio (S/T) Dry Bulb			Total Cooling Capacity		Comp Motor kW Input	Sensible To Total Ratio (S/T) Dry Bulb			Total Cooling Capacity		Comp Motor kW Input	Sensible To Total Ratio (S/T) Dry Bulb			Total Cooling Capacity		Comp Motor kW Input	Sensible To Total Ratio (S/T) Dry Bulb		
	cfm	L/s	kBtuh	kW		75°F 24°C	80°F 27°C	85°F 29°C	kBtuh	kW		75°F 24°C	80°F 27°C	85°F 29°C	kBtuh	kW		75°F 24°C	80°F 27°C	85°F 29°C	kBtuh	kW		75°F 24°C	80°F 27°C	85°F 29°C
HS29-062 — CB31MV-51 - TXV Systems Only																										
63°F (17°C)	1625	765	57.5	16.9	3.94	.71	.85	.97	55.3	16.2	4.37	.72	.87	.99	52.7	15.4	4.86	.74	.89	1.00	49.7	14.6	5.42	.76	.92	1.00
	1825	860	58.7	17.2	3.97	.74	.89	1.00	56.5	16.6	4.40	.75	.91	1.00	53.8	15.8	4.89	.77	.93	1.00	50.7	14.9	5.46	.79	.96	1.00
	2025	955	59.8	17.5	3.99	.76	.92	1.00	57.5	16.9	4.42	.78	.94	1.00	54.8	16.1	4.92	.80	.96	1.00	51.7	15.2	5.49	.82	.99	1.00
67°F (19°C)	1625	765	61.3	18.0	4.03	.56	.68	.82	59.0	17.3	4.46	.56	.70	.83	56.1	16.4	4.96	.57	.71	.85	52.8	15.5	5.53	.58	.73	.88
	1825	860	62.4	18.3	4.06	.57	.71	.85	59.9	17.6	4.49	.58	.72	.87	57.1	16.7	4.99	.59	.74	.89	53.6	15.7	5.55	.60	.77	.92
	2025	955	63.3	18.6	4.08	.58	.74	.89	60.8	17.8	4.51	.59	.75	.91	57.8	16.9	5.01	.60	.77	.93	54.3	15.9	5.58	.62	.80	.96
71°F (22°C)	1625	765	65.6	19.2	4.13	.42	.54	.66	63.0	18.5	4.58	.42	.55	.67	60.0	17.6	5.08	.42	.55	.69	56.4	16.5	5.65	.43	.57	.71
	1825	860	66.6	19.5	4.16	.42	.55	.69	64.0	18.8	4.61	.42	.56	.70	60.9	17.8	5.11	.43	.57	.72	57.2	16.8	5.68	.43	.59	.74
	2025	955	67.5	19.8	4.18	.43	.57	.71	64.8	19.0	4.63	.43	.58	.73	61.6	18.1	5.13	.43	.59	.75	57.8	16.9	5.70	.44	.61	.77
HS29-062 — CB29M-65 - CB28UH-060 - TXV Systems Only																										
63°F (17°C)	1900	895	60.7	17.8	4.10	.76	.91	1.00	58.5	17.1	4.55	.77	.92	1.00	55.9	16.4	5.07	.79	.94	1.00	52.9	15.5	5.65	.81	.97	1.00
	2000	945	61.2	17.9	4.11	.77	.92	1.00	59.1	17.3	4.56	.78	.94	1.00	56.4	16.5	5.08	.80	.96	1.00	53.4	15.6	5.67	.83	.98	1.00
	2100	990	61.7	18.1	4.12	.78	.94	1.00	59.5	17.4	4.57	.80	.95	1.00	56.9	16.7	5.10	.82	.97	1.00	53.9	15.8	5.68	.84	.99	1.00
67°F (19°C)	1900	895	64.4	18.9	4.18	.58	.73	.87	61.9	18.1	4.63	.59	.75	.89	59.1	17.3	5.15	.60	.76	.91	55.6	16.3	5.74	.62	.79	.94
	2000	945	64.8	19.0	4.19	.59	.74	.89	62.3	18.3	4.64	.60	.76	.91	59.4	17.4	5.16	.61	.78	.93	56.0	16.4	5.75	.63	.80	.96
	2100	990	65.2	19.1	4.19	.60	.76	.91	62.7	18.4	4.65	.61	.77	.92	59.8	17.5	5.17	.62	.79	.94	56.3	16.5	5.76	.63	.82	.97
71°F (22°C)	1900	895	68.6	20.1	4.27	.43	.57	.71	66.1	19.4	4.74	.43	.58	.72	63.0	18.5	5.27	.44	.59	.74	59.3	17.4	5.86	.44	.60	.76
	2000	945	69.0	20.2	4.28	.43	.58	.72	66.4	19.5	4.75	.44	.59	.74	63.3	18.6	5.28	.44	.60	.75	59.6	17.5	5.87	.45	.61	.78
	2100	990	69.4	20.3	4.29	.44	.58	.73	66.7	19.5	4.76	.44	.59	.75	63.6	18.6	5.29	.44	.61	.77	59.9	17.6	5.88	.45	.62	.80
HS29-062 — CB30M-65 - CB30U-65 - TXV Systems Only																										
63°F (17°C)	1850	875	60.2	17.6	4.02	.75	.89	1.00	57.9	17.0	4.45	.76	.91	1.00	55.2	16.2	4.95	.78	.93	1.00	52.0	15.2	5.52	.80	.96	1.00
	1950	920	60.7	17.8	4.03	.76	.91	1.00	58.4	17.1	4.47	.77	.93	1.00	55.7	16.3	4.97	.79	.95	1.00	52.5	15.4	5.54	.82	.98	1.00
	2050	970	61.3	18.0	4.04	.77	.93	1.00	59.0	17.3	4.48	.79	.94	1.00	56.2	16.5	4.99	.81	.96	1.00	53.0	15.5	5.56	.83	.99	1.00
67°F (19°C)	1850	875	64.0	18.8	4.10	.58	.72	.86	61.5	18.0	4.55	.59	.73	.88	58.5	17.1	5.05	.60	.75	.90	55.0	16.1	5.62	.61	.77	.93
	1950	920	64.5	18.9	4.12	.59	.73	.88	61.9	18.1	4.57	.59	.75	.90	58.9	17.3	5.07	.60	.77	.92	55.3	16.2	5.64	.62	.79	.95
	2050	970	64.9	19.0	4.13	.59	.75	.90	62.3	18.3	4.57	.60	.76	.91	59.3	17.4	5.08	.61	.78	.94	55.7	16.3	5.65	.63	.81	.97
71°F (22°C)	1850	875	68.3	20.0	4.21	.43	.56	.70	65.6	19.2	4.66	.43	.57	.71	62.4	18.3	5.17	.43	.58	.73	58.6	17.2	5.75	.44	.60	.75
	1950	920	68.8	20.2	4.22	.43	.57	.71	66.0	19.3	4.68	.43	.58	.72	62.8	18.4	5.19	.44	.59	.74	58.9	17.3	5.76	.44	.61	.77
	2050	970	69.1	20.3	4.23	.43	.58	.72	66.4	19.5	4.69	.44	.59	.74	63.1	18.5	5.20	.44	.60	.76	59.3	17.4	5.77	.45	.62	.78
HS29-062 — CB31MV-65 - TXV Systems Only																										
63°F (17°C)	1805	850	59.6	17.5	4.15	.72	.87	1.00	57.3	16.8	4.60	.73	.89	1.00	54.7	16.0	5.11	.75	.92	1.00	51.5	15.1	5.70	.77	.95	1.00
	2005	945	60.7	17.8	4.17	.74	.91	1.00	58.4	17.1	4.62	.76	.93	1.00	55.6	16.3	5.15	.78	.96	1.00	52.5	15.4	5.74	.81	.98	1.00
	2205	1040	61.7	18.1	4.19	.77	.94	1.00	59.3	17.4	4.65	.79	.96	1.00	56.6	16.6	5.18	.81	.98	1.00	53.5	15.7	5.77	.84	1.00	1.00
67°F (19°C)	1805	850	63.4	18.6	4.24	.56	.69	.84	60.9	17.8	4.70	.56	.71	.86	58.0	17.0	5.22	.57	.72	.88	54.5	16.0	5.81	.59	.74	.91
	2005	945	64.3	18.8	4.26	.57	.72	.88	61.8	18.1	4.72	.58	.73	.89	58.8	17.2	5.24	.59	.75	.92	55.2	16.2	5.83	.60	.78	.95
	2205	1040	65.1	19.1	4.29	.59	.74	.91	62.5	18.3	4.74	.60	.76	.93	59.4	17.4	5.27	.61	.79	.96	55.8	16.4	5.86	.62	.82	.98
71°F (22°C)	1805	850	67.7	19.8	4.35	.41	.54	.67	65.0	19.0	4.82	.42	.55	.68	61.9	18.1	5.34	.42	.56	.70	58.1	17.0	5.94	.42	.57	.72
	2005	945	68.6	20.1	4.37	.42	.56	.70	65.8	19.3	4.84	.42	.57	.71	62.6	18.3	5.37	.42	.58	.73	58.8	17.2	5.96	.43	.59	.76
	2205	1040	69.3	20.3	4.39	.42	.57	.72	66.5	19.5	4.86	.43	.58	.74	63.2	18.5	5.39	.43	.60	.76	59.3	17.4	5.98	.44	.61	.79
HS29-062 — CVP10-65/EC10Q5 - TXV Systems Only																										
63°F (17°C)	1640	775	58.3	17.1	4.95	.74	.88	.99	56.2	16.5	5.50	.75	.89	1.00	53.6	15.7	6.13	.77	.91	1.00	50.6	14.8	6.83	.78	.94	1.00
	1840	870	59.6	17.5	4.99	.77	.91	1.00	57.3	16.8	5.54	.78	.93	1.00	54.8	16.1	6.16	.79	.95	1.00	51.8	15.2	6.87	.82	.97	1.00
	2040	965	60.7	17.8	5.03	.79	.94	1.00	58.5	17.1	5.58	.81	.96	1.00	55.9	16.4	6.20	.83	.98	1.00	52.8	15.5	6.92	.85	1.00	1.00
67°F (19°C)	1640	775	62.1	18.2	5.06	.57	.71	.84	59.7	17.5	5.61	.58	.72	.86	57.0	16.7	6.24	.59	.74	.88	53.6	15.7	6.95	.60	.76	.91
	1840	870	63.1	18.5	5.09	.59	.74	.88	60.7	17.8	5.65	.60	.75	.90	57.8	16.9	6.28	.61	.77	.92	54.4	15.9	6.99	.62	.80	.94
	2040	965	64.0	18.8	5.12	.61	.77	.91	61.5	18.0	5.67	.62	.79	.93	58.6	17.2	6.31	.63	.80	.95	55.2	16.2	7.02	.64	.83	.98
71°F (22°C)	1640	775	66.4	19.5	5.19	.43	.56	.69	63.8	18.7	5.75	.43	.56	.70	60.8	17.8	6.39	.43	.57	.72	57.2	16.8	7.11	.44	.59	.74
	1840	870	67.4	19.8	5.22	.43	.57	.72	64.8	19.0	5.78	.44	.58	.73	61.6	18.1	6.42	.44	.60	.75	58.0	17.0	7.14	.45	.61	.77
	2040	965	68.2	20.0	5.25	.44	.59	.75	65.5	19.2	5.81	.44	.60	.76	62.3	18.3	6.45	.45	.62	.78	58.6	17.2	7.17	.45	.63	.81