PACKAGED GAS / ELECTRIC

KGA/KGB

Landmark® Rooftop Units
Standard/High Efficiency - 60 Hz

COMMERCIAL
PRODUCT SPECIFICATIONS

Bulletin No. 210824
April 2022
Supersedes March 2022

LANDMARK®
Performance Marked by Flexibility™

Environ™ Coil System | Humiditrol | MSAV™ MULTI-STAGE AIR VOLUME

ASHRAE 90.1 COMPLIANT

13 to 25 Tons
Net Cooling Capacity – 150,000 to 270,000 Btuh
Gas Input Heat Capacity – 260,000 to 480,000 Btuh

MODEL NUMBER IDENTIFICATION

K G B 240 S 4 B S 1 Y

Brand/Family
K = Landmark®

Unit Type
G = Packaged Gas Heat w/ Electric Cooling

Major Design Sequence
A = 1st Generation
B = 2nd Generation

Nominal Cooling Capacity - Tons
156 = 13 Tons
180 = 15 Tons
210 = 17.5 Tons
240 = 20 Tons
300 = 25 Tons

Cooling Efficiency
H = High Efficiency
S = Standard Efficiency

Refrigerant Type
4 = R-410A

Blower Type
B = Constant Air Volume, Belt Drive
M = MSAV® Multi-Stage Air Volume, Belt Drive

Heating Type
S = Standard Gas Heat, 2 Stage
M = Medium Gas Heat, 2 Stage
H = High Gas Heat, 2 Stage

Minor Design Sequence
1 = 1st Revision
2 = 2nd Revision
3 = 3rd Revision

Voltage
Y = 208/230V-3 phase-60hz
G = 460V-3 phase-60hz
J = 575V-3 phase-60hz

FEATURE HIGHLIGHTS

Landmark® rooftop units from Lennox® are the new standard for reliable, efficient rooftop units built for long-lasting performance that can significantly improve indoor and outdoor environments.

1. Heat Exchanger
2. Scroll Compressors
3. Thermal Expansion Valves
4. Filter/Driers
5. Environ™ Coil System
6. Outdoor Coil Fan Motors
7. Cabinet Construction
8. Constant or MSAV® Multi-Stage Air Volume Blower
9. Unit Control
10. Disconnect Switch (option)
11. Air Filters
12. Economizer (option)
13. Downflow Barometric Relief Dampers (option)
14. Power Exhaust Fans (option)

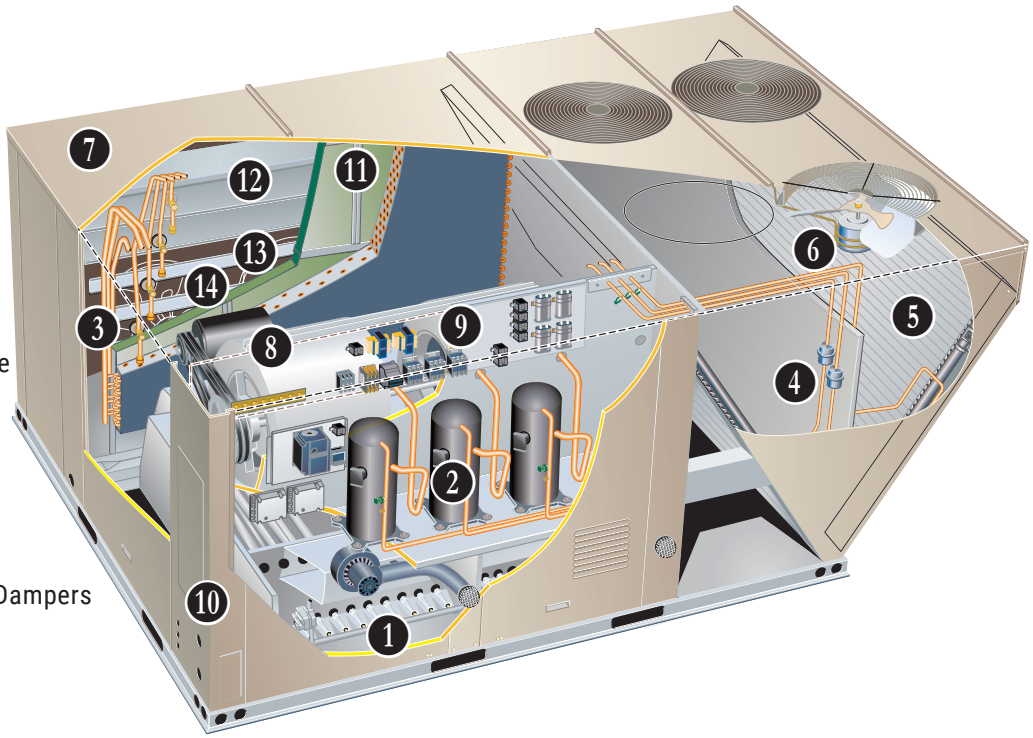

CONTENTS

Approvals And Warranty . . . 3
Blower Data . . . 35
Dimensions - Accessories . . . 48
Dimensions - Unit . . . 45
Electrical Accessories . . . 42
Electrical Data . . . 38
Features And Benefits . . . 3
High Altitude Derate . . . 24
Humiditrol® Dehumidification System Option . . . 13
Humiditrol® Dehumidification System Ratings . . . 33
Model Number Identification . . . 1
Optional Conventional Temperature Control Systems . . . 12
Options / Accessories . . . 15
Outdoor Sound Data . . . 43
Ratings . . . 25
Specifications - Gas Heat . . . 24
Specifications - High Efficiency . . . 22
Specifications - Standard Efficiency . . . 20
Unit Clearances . . . 43
Weight Data . . . 44

APPROVALS AND WARRANTY

APPROVALS

- AHRI Standard 340/360 certified
- ETL and CSA listed
- CSA certified energy ratings
- Unit and components ETL, NEC and CEC bonded for grounding to meet safety standards for servicing
- All models are ASHRAE 90.1-2010 energy efficiency compliant and meet or exceed requirements of Section 6.8
- All models meet DOE 2018 energy efficiency standards
- MSAV® Multi-Stage Air Volume models meet California Code of Regulations, Title 24 and ASHRAE 90.1-2010 Section 6.4.3.10 requirements for staged airflow
- ISO 9001 Registered Manufacturing Quality System

WARRANTY

- Aluminized steel heat exchanger - Limited ten years
- Stainless steel heat exchanger (optional) - Limited fifteen years
- Compressors - Limited five years
- Environ™ Coil System - Limited three years
- Variable-Frequency Drive (VFD) (optional) - Limited five years
- High Performance Economizers (optional) - Limited five years
- All other covered components - Limited one year

FEATURES AND BENEFITS

HEATING SYSTEM

- Aluminized steel inshot burners
- Direct spark ignition
- Electronic flame sensor
- Combustion air inducer
- Redundant automatic dual stage gas valve with manual shut-off

1 Heat Exchanger

- Tubular construction
- Aluminized steel
- Life cycle tested

NOTE - Optional Stainless Steel Heat Exchanger is required if mixed air temperature is below 45°F.

Electronic Pilot Ignition

- Provides positive direct ignition of burners on each operating cycle
- System permits main gas valve to stay open only when the burners are proven to be lit
- Should a loss of flame occur, the gas valve closes, shutting off the gas to the burners
- LED indicates status and aid in troubleshooting
- Factory installed in the controls section

Limit Controls

- Factory installed
- Redundant limit controls with fixed temperature setting Protects heat exchanger and other components from overheating

Safety Switches

- Protects system operation
- Flame roll-out switch
- Flame sensor
- Combustion air inducer proving switch

Required Selections

Gas Input Choice - Order one:

- Standard Gas Heat, 2 Stage (169,000/260,000 Btuh)
- Medium Gas Heat, 2 Stage (234,000/360,000 Btuh)
- High Gas Heat, 2 Stage (312,000/480,000 Btuh)

Options / Accessories

Factory Installed

Stainless Steel Heat Exchanger

- Required if mixed air temperature is below 45°F

Field Installed

Bottom Gas Piping Kit

- Allows bottom gas entry

Low Temperature Vestibule Heater

- Electric heater automatically controls minimum temperature in gas burner compartment when temperature is below –40°F
- CSA certified to allow operation of unit down to -60°F

HEATING SYSTEM (continued)

Options / Accessories

Field Installed

Combustion Air Intake Extensions
- Recommended for use with existing flue extension kits in areas where high snow areas can block intake air
- Order two kits

LPG/Propane Kits
- Conversion kit to field change over units from Natural Gas to LPG/Propane
- Order two kits

Vertical Vent Extension Kit
- Use to exhaust flue gases vertically above unit
- Required when unit vent is too close to fresh air intakes per building codes
- Also prevents ice formation on intake louvers
- Contains vent transition, vent tee, drain cap and installation hardware

NOTE - Straight vent pipes (4 in. B-Vent) and caps are not furnished and must be field supplied. Refer to kit instructions for additional information.

COOLING SYSTEM

- Designed to maximize sensible and latent cooling performance at design conditions
- System can operate from 30°F to 125°F without any additional controls

R-410A Refrigerant
- Non-chlorine based
- Ozone-friendly

2 Scroll Compressors
- Scroll compressors on all models for high performance, reliability and quiet operation
- Resiliently mounted on rubber grommets for quiet operation

Compressor Crankcase Heaters
- Protect against refrigerant migration that can occur during low ambient operation

3 Thermal Expansion Valves
(All High Efficiency Models, 300S Model and all Standard Efficiency Models with Humiditrol Dehumidification)
- Ensures optimal performance throughout the application range
- Removable element head

Refrigerant Metering Orifice (All Standard Efficiency Models except 300S Model)
- Accurately meters refrigerant in system
- Refrigerant control is accomplished by exact sizing of refrigerant metering orifice

4 Filter/Driers
- High capacity filter/drier protects the system from dirt and moisture

High Pressure Switches
- Protects the compressor from overload conditions such as dirty condenser coils, blocked refrigerant flow or loss of outdoor fan operation

Indoor Coil Freeze Protection
- Protects the evaporator coil from damaging ice build-up due to conditions such as low/no airflow or low refrigerant charge

5 Condenser Coil - Environ™ Coil System
Lightweight, all aluminum brazed fin construction
- Constructed of three components
  - A flat extrusion tube
  - Fins in-between the flat extrusion tube
  - Two refrigerant manifolds

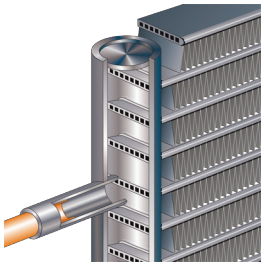

Environ™ Coil System Features:
- Improved heat transfer performance due to high primary surface area (flat tubes) versus secondary surface (fins)
- Smaller internal volume (reduced refrigerant charge)
- High durability
- All aluminum construction
- Fewer brazed joints
- Compact design
- Reduced unit weight
- Easy maintenance/cleaning
- Mounting brackets with rubber inserts secure coil to unit providing vibration dampening and corrosion protection
- Angled cabinet design protects coil from damage

Evaporator Coil
- Copper tube construction
- Enhanced rippled-edge aluminum fins
- Flared shoulder tubing connections
- Silver soldered construction
- Factory leak tested
- Cross-row circuiting with rifled tubing

Condensate Drain Pan
- Plastic pan, sloped to meet drainage requirements of ASHRAE 62.1
- Side or bottom drain connections

6 Outdoor Coil Fan Motors
- Thermal overload protected
- Totally enclosed
- Permanently lubricated ball bearings
- Shaft up
- Wire basket mount

Outdoor Coil Fans
- PVC coated fan guard furnished

COOLING SYSTEM (continued)

Required Selections

Cooling Capacity
- Specify nominal cooling capacity

Options/Accessories

Factory Installed

Conventional Fin/Tube Condenser Coil (replaces Environ™ Coil System, Standard Efficiency Models only)
- Copper tube construction
- Enhanced rippled-edge aluminum fins
- Flared shoulder tubing connections
- Silver soldered construction

NOTE - Required if Humiditrol® Dehumidification System is ordered.

Field Installed

Condensate Drain Trap
- Available in copper or PVC

Drain Pan Overflow Switch
- Monitors condensate level in drain pan, shuts down unit if drain becomes clogged

Low Ambient Controls
- Units operate satisfactorily down to 45°F outdoor air temperature without any additional controls
- Two low ambient control options are available
  1. Low Ambient Control Kit (30°F) - Allows unit operation down to 30°F.
  2. Low Ambient Control Kit (0°F) - Allows unit operation down to 0°F without evaporator coil icing
     - Head pressure speed control reduces outdoor fan operation during low ambient conditions until head pressure rises to the setpoint
     - Pressure transducers are mounted on the liquid lines
     - High pressure switches are furnished to replace existing
     - Wiring harnesses are furnished for simple plug-in wiring to fans and controller

CABINET

7 Construction
- Heavy-gauge steel panels
- Full perimeter heavy-gauge galvanized steel base rail
- Base rails have rigging holes
- Three sides of the base rail have forklift slots
- Raised edges around duct and power entry openings in the bottom of the unit for water protection

Airflow Choice
- Units are shipped in downflow (vertical) return air flow configuration

NOTE - Units can be field converted to horizontal air flow with optional Horizontal Return Air Panel Kit and Horizontal Roof Curb.

Power/Gas Entry
- Electrical and gas lines can be routed through the unit base or through horizontal access knock-outs

Exterior Panels
- Constructed of heavy-gauge, galvanized steel
- Two-layer enamel paint finish

Insulation
- Fully insulated with non-hygroscopic fiberglass insulation (conditioned areas)
- Unit base is fully insulated
- Base insulation serves as an air seal to the roof curb, eliminating the need to add a seal during installation

Access Panels
- Economizer/Filter section
- Heating/Blower section
- Compressor/Controls section

CABINET (continued)

Options/Accessories

Factory Installed

Corrosion Protection
- Completely flexible immersed coating
- Electrodeposited dry film process (AST ElectroFin E-Coat)
- ASTM B117 / DIN 53167 Salt Spray - 15,000+ hours
- ASTM G85 Annex A3 SWAAT Modified Salt Spray - 3000 hours
- VA Master Construction Specification Division 23 for High Humidity Installations
- CID AA-52474A (GSA)
- Indoor Corrosion Protection:
  - Coated coil
  - - Coated reheat coil
  - - Painted blower housing
  - - Painted base
- Outdoor Corrosion Protection:
  - Coated coil
  - Painted outdoor base

Hinged Access Panels
- Filter section
- Heating/Blower section
- Compressor/Controls section.
- Panels seal and slotted, 3/4 in. hex bolt quarter-turn latches provide a tight air and water seal

Field Installed

Combination Coil/Hail Guards
- Heavy gauge steel frame
- Painted to match cabinet
- Expanded metal mesh protects outdoor coil

Horizontal Return Air Panel Kit
- Required for horizontal applications with Horizontal Roof Curb
- Contains panel with return air opening for field replacement of existing unit panel and panel to cover bottom return air opening in unit
- See dimension drawings

BLOWER

- A wide selection of supply air blower options are available to meet a variety of airflow requirements

Motor
- Overload protected, equipped with ball bearings
- Belt drive motors are offered on all models and are available in several different sizes to maximize air performance

Supply Air Blower
- Forward curved blades
- Double inlet
- Blower wheel statically and dynamically balanced
- Ball bearings
- Adjustable pulley (allows speed change)
- Blower assembly slides out of unit for servicing

Required Selections

8 Select Constant Air Volume (CAV) or MSAV® Multi-Stage Air Volume
- Constant Air Volume (CAV) models supply a constant volume of air
- MSAV® Multi-Stage Air Volume models utilize a Variable Frequency Drive (VFD) to stage the supply air blower airflow
  - The VFD alters the frequency and voltage of the power supply to the blower to control blower speed
  - The supply air blower has two speeds:
    1. Low speed for part-load cooling operation

NOTE - Low speed is 66% of high speed

    2. High speed for full load cooling and all heat modes
  - Full speed blower operation is set by adjusting the motor pulley to deliver the desired air volume
  - The ventilation speed is selectable between high and low speed

NOTE - Part load airflow in cooling mode on MSAV® Multi-Stage Air Volume models should not be set below 220 cfm/nominal full load ton to reduce the risk of evaporator coil freeze-up.

  - The VFD has an operational range of -40 to 125° F outdoor air ambient temperature
  - Lower operating costs are obtained when the blower is operated on lower speeds

BLOWER (continued)

MSAV® Multi-Stage Air Volume Sequence of Operation

- Ventilation speed is determined by the VENT SPEED switch setting on VFD control board (LO or HI)
- Blower operates in low speed for mechanical cooling (Y1)
- Blower operates in high speed for any other mode (free cooling, mechanical cooling Y1+Y2, and heating)
- Economizer damper minimum position is fully closed in unoccupied mode
- In occupied mode, the economizer damper minimum position is determined by the setting of the two potentiometers on VFD control board:
  - LO SPD MIN POS potentiometer sets the minimum position when blower is operating at low speed
  - HI SPD MIN POS potentiometer sets the minimum position when blower is operating at high speed

NOTE - Units equipped a Variable Frequency Drive (VFD) are designed to operate on balanced, three-phase power. Operating units on unbalanced three-phase power will reduce the reliability of all electrical components in the unit. Unbalanced power is a result of the power delivery system supplied by the local utility company. Factory-installed inverters are sized to drive blower motors with an equivalent current rating using balanced three-phase power. If unbalanced three-phase power is supplied the installer must replace the existing factory-installed inverter with an inverter that has a higher current rating to allow for the imbalance. Refer to the installation instructions for additional information and replacement information.

Ordering Information

- Specify standard or high efficiency blower motor, motor horsepower and drive kit number when base unit is ordered

Options/Accessories

Field Installed

VFD Manual Bypass Kit

- VFD Manual Bypass Control is available as a kit for MSAV® Multi-Stage Air Volume equipped models
- The VFD Manual Bypass Control is a manual bypass and is enabled by re-configuring the wiring on the unit

CONTROLS

9 Unit Control

- All control voltage is provided via a 24V (secondary) transformer with built-in circuit breaker protection
- Up to 2 heat / 2 cool staging with a third party DDC control system or thermostat
- Low voltage terminal block provides screw terminal connections for thermostat or controller wiring
- Night Setback Mode saves energy by closing outdoor air dampers and operating supply fan on thermostat demand only

Options/Accessories

Field Installed

Smoke Detector

- Photoelectric type
- Installed in supply air section, return air section or both sections
- Available with power board and single sensor (supply or return) or power board and two sensors (supply and return)
- Power board located in unit control compartment

Commercial Control Systems

Thermostats

- Control system and thermostat options see page 12

ELECTRICAL

- All units include terminal block and fuse block in power entry junction box for single power entry application

Marked & Color-Coded Wiring
- All electrical wiring is color-coded and marked to identify which components it is connecting

Electrical Plugs
- Positive connection electrical plugs are used to connect common accessories or maintenance parts for easy removal or installation

Required Selections

Voltage Choice
- Specify when ordering base unit

Options/Accessories

Factory or Field Installed

10 Disconnect Switch
- Accessible from outside of unit
- Spring loaded weatherproof cover furnished

GFI Service Outlets (2)
- 115V ground fault circuit interrupter (GFCI) type options:
- Factory installed, non-powered, field wired
- Field installed, non-powered, field wired

Field Installed

GFI Weatherproof Cover
- Single-gang cover
- Heavy-duty UV-resistant polycarbonate case construction
- Hinged base cover with gasket

Phase Monitor
- Phase monitor detects the phasing of incoming power
- If the incoming power is out of phase or if any of the three phases are lost red LED on the phase monitor will light and the unit will not start
- Green LED indicates normal operation with correct incoming power phasing

NOTE - Phase Monitor is factory Installed in the control compartment on all units equipped with the MSAV® Supply Air Blower option.

INDOOR AIR QUALITY

11 Air Filters
- Disposable 2 inch filters furnished as standard

Options/Accessories

Field Installed

Healthy Climate® High Efficiency Air Filters
- Disposable MERV 8 or MERV 13 (Minimum Efficiency Reporting Value based on ASHRAE 52.2) efficiency
- 2 inch pleated filters

Healthy Climate® UVC Germicidal Lamps

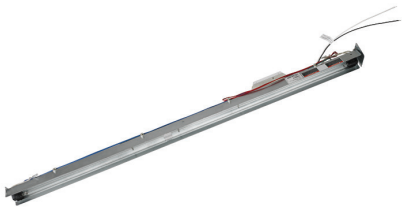

- Germicidal lamps emit ultra-violet (UV-C) energy, which has been proven to be effective in reducing microbes such as viruses, bacteria, yeasts, and molds
- This process either destroys the organism or controls its ability to reproduce
- UV-C energy greatly reduces the growth and proliferation of mold and other bioaerosols (bacteria and viruses) on illuminated surfaces (particularly coil and drain pan)
- Field installed in the blower/evaporator coil section
- Magnetic safety interlock terminates power when access panels are removed
- All necessary hardware for installation is included
- Lamps operate on 110/230V-1ph power supply

NOTE - Step-down transformer may be ordered separately for 460V and 575V units.

- Approved by ETL

Indoor Air Quality (CO_2) Sensors
- Monitors CO_2 levels
- Reports to the Unit Controller which adjusts economizer dampers as needed

Needlepoint Bipolar Ionization (NPBI) Kit
- NPBI technology has been shown to effectively reduce harmful pathogens, pollutants and odors

NOTE - Please visit www.sciencedirect.com for additional information.

- Brush-type ionizer introduces a high concentration of both positive and negative ions into the air stream
- These bipolar ions are then dispersed into the occupied space through the duct system proactively reducing the airborne contaminants
- Ions travel within the building air stream and attach to particles, pathogens, and gas molecules, making them larger and easier to capture in the filtration system
- UL 2998 certified for zero ozone emission

ECONOMIZER

Factory or Field Installed

12 Economizer
(Standard and High Performance Common Features)

- Outdoor Air Hood with mist elimination filter furnished
- Mixed Air Sensor furnished for field installation in the rooftop unit

NOTE - Sensor is factory installed when Economizer is factory installed.

Standard Economizer Features
(Not for Title 24)

- Gear-driven action
- 24-volt, fully-modulating spring return motor
- Return air and outdoor air dampers
- Plug-in connections to unit
- Nylon bearings
- Neoprene seals

Standard Economizer Control Module
(Not for Title 24)

- Standard Economizer Control Module operation is based on outdoor air temperatures

Economizer Controls:

- Damper Minimum Position - Can be set lower than traditional minimum air requirements resulting in cost savings
- IAQ Sensor - Signals dampers to modulate and maintain 55°F when CO_2 is higher than the CO_2 setpoint
- Demand Control Ventilation (DCV) LED - A steady green Demand Control Ventilation LED indicates the IAQ reading is higher than setpoint and requires more fresh air
- Free Cool LED - A steady green LED indicates outdoor air is suitable for free cooling
  - Free Cooling runs when outdoor air temperature is lower than the set temperature on the economizer control.

NOTE: The Free Cooling default setting for outdoor air temperature sensor is 55°F.

High Performance Economizer Features

- Approved for California Title 24 building standards
- Low leakage dampers are Air Movement and Control Association International (AMCA) Class 1A Certified - Maximum 3 CFM per sq. ft. leakage at 1 in. w.g.
- ASHRAE 90.1-2010 compliant
- Gear-driven action
- High torque 24-volt fully-modulating spring return damper motor
- Return air and outdoor air dampers
- Plug-in connections to unit
- Stainless steel bearings
- Enhanced thermoplastic vulcanizate (TPV) seals
- Flexible stainless steel jamb seals

NOTE - High Performance Economizers are not approved for use with enthalpy controls in Title 24 applications.

High Performance Economizer Control Module

- Provides inputs and outputs to control economizer based on parameter settings

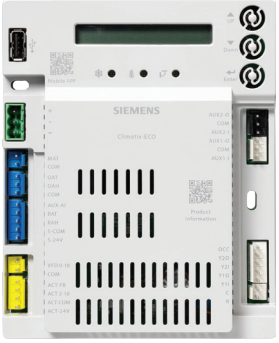

- Free cooling based on single dry bulb temperature, or combination temperature + humidity sensors
- Automatic switchover for different control modes
- Parameter settings based on climate zone, using GPS functionality in the Climatix Mobile application
- LED indication for free cooling operation, sensor operation and damper operation
- Quick installation and easy commissioning with the **Climatix Mobile App** on a mobile device

Download on the App Store | ANDROID APP ON Google play

NOTE - WLAN Stick is required for App connection to module(s).

- Module displays any alarm messages (fault detection and diagnostics) as an aid in troubleshooting
- RS485 port for BACnet MS/TP or Modbus RTU communication
- USB port for firmware updates and WLAN connection for setup and commissioning
- QR codes on module for quick access to download Climatix Mobile App and user documentation
- User Interface for normal operation, parameter setup, and alarm notifications with an LCD display and three operation buttons:
  1. Up Button - Move to the previous value, step or category
  2. Down Button - Move to the next value, step or category
  3. Enter Button -
     - Press to edit the current value or option
     - Press to confirm a newly selected value or option
     - Press Enter + Up to jump up one category
     - Press Enter + Down to jump down one category

NOTE - The Free Cooling setpoint for Title 24 applications must be set based on the Climate Zone where the system is installed. See Section 140.4 "Prescriptive Requirements for Space Conditioning Systems" of the California Energy Commission's 2013 Building Energy Efficiency Standards.

NOTE - Refer to Installation Instructions for complete setup information and menu parameters available.

ECONOMIZER (continued)

Factory or Field Installed

Single Enthalpy Temperature Control
- Outdoor air enthalpy sensor enables Economizer if the outdoor enthalpy is less than the setpoint of the control

Field Installed

Differential Enthalpy Control (Not for Title 24)
- Order two Single Enthalpy Controls:
  - One is field installed in the return air section
  - One in the outdoor air section
- Allows the economizer control board to select between outdoor air or return air, whichever has lower enthalpy

WLAN Stick
- Required for Climatix Mobile App usage
- Plugs into USB port on Module to provide a temporary WLAN connection for setup, commissioning, and servicing

NOTE - Only one WLAN Stick is required and can be used on multiple modules.

EXHAUST

Factory or Field Installed

13 Downflow Barometric Relief Dampers With Exhaust Hood
- Allow relief of excess air
- Aluminum blade dampers prevent blow back and outdoor air infiltration during off cycle
- Exhaust hood with bird screen is furnished

Field Installed

Horizontal Barometric Relief Dampers With Exhaust Hood
- For use when unit is configured for horizontal applications requiring an economizer
- Allows relief of excess air
- Aluminum blade dampers prevent blow back and outdoor air infiltration during off cycle
- Field installed in return air duct
- Exhaust hood with bird screen is furnished

14 Power Exhaust Fans
- Installs internal to unit for downflow applications only with economizer option
- Provides exhaust air pressure relief
- Interlocked to run when supply air blower is operating, fans run when outdoor air dampers are 50% open (adjustable)
- Motor is overload protected
- Dual fans
- 20 in. diameter
- 5 blades
- Two 1/3 hp motors
- SCCR rated

NOTE - Requires Economizer with Outdoor Air Hood and Downflow Barometric Relief Dampers

OUTDOOR AIR

Factory or Field Installed

Outdoor Air Damper - Downflow or Horizontal With Air Hood
- Linked mechanical dampers
- 0 to 25% (fixed) outdoor air adjustable
- Installs in unit. Includes outdoor air hood
- Motorized model features fully modulating spring return damper motor with plug-in connection
- Manual model features parallel blade, gear-driven dampers with adjustable fixed position

NOTE - Outdoor Air Hood is included when damper is factory installed and is furnished with damper when ordered for field installation.

OPTIONS / ACCESSORIES

ROOF CURBS

- Nailer strip furnished (downflow only)
- Mates to unit
- US National Roofing Contractors Approved
- Shipped knocked down

Downflow

Hybrid Roof Curbs

- Interlocking tabs fasten corners together
- No tools required for assembly
- Can also be fastened together with furnished hardware
- Available in 8, 14, 18, and 24 inch heights

Adjustable Pitch Curb

- Fully adjustable pitch curbs (3/4 in. per foot in any direction) provide a level platform for rooftop units allowing flexible installations on roofs with uneven or sloped angles
- Interlocking tabs fasten corners together
- No tools required for assembly
- Hardware is furnished to connect upper curb with lower curb
- Available in 14 inch height

Horizontal

- Meet National Roofing Code requirements
- Converts unit from downflow to horizontal (side) air flow
- Return air is on unit, supply air is on curb
- See dimension drawings
- Available in 26, 30, 37, and 41 inch heights

NOTE - Requires Horizontal Return Air Panel Kit.

NOTE - Optional Insulation Kit is available to help prevent sweating.

Adaptor Curbs (not shown)

- Curbs are regionally sourced
- Dimensions vary based upon the source

NOTE - Contact your local sales representative for a detailed cut sheet with applicable dimensions.

CEILING DIFFUSERS

Field Installed

Ceiling Diffusers
(Flush or Step-Down)

- White powder coat finish on diffuser face and grilles
- Insulated UL listed duct liner
- Diffuser box has collars for duct connection
- Step-down diffusers have double deflection blades
- Flush diffusers have fixed blades
- Provisions for suspending
- Internally sealed to prevent recirculation
- Removable return air grille
- Adapts to T-bar ceiling grids or plaster ceilings

Transitions (Supply and Return)

- Used with diffusers
- Installs in roof curb
- Galvanized steel construction
- Flanges furnished for duct connection to diffusers
- Fully insulated

OPTIONAL CONVENTIONAL TEMPERATURE CONTROL SYSTEMS

ComfortSense® 7500 Commercial 7-Day Programmable Thermostat

- Four-Stage Heating / Two-Stage Cooling
- Universal Multi-Stage
- Intuitive Touchscreen Interface
- Automatic Changeover between Heating and Cooling
- Full Seven-Day Programming
- Four Time Periods Per Day
- Temperature and Humidity Control
- One-Touch Away Mode
- Holiday Scheduling
- Smooth Setback Recovery (SSR)
- Performance Reports
- Notifications/Reminders
- Dehumidification/Humiditrol® Control for Split Systems and Rooftop Units
- Economizer Relay Control
- Backlit Display
- Wallplate Furnished
- FDD, ASHRAE and IECC Compliant

ComfortSense® 3000 Commercial 5-2 Day Programmable Thermostat

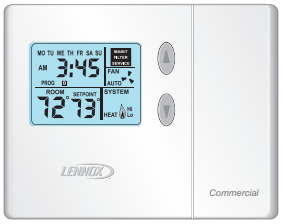

- Two-Stage Heating / Two-Stage Cooling
- Conventional Systems
- Intuitive Interface
- 5-2 Day Programming
- Program Hold
- Remote Indoor Temperature Sensing
- Smooth Setback Recovery (SSR)
- Economizer Relay Control
- Maintenance/Filter/Service Reminders
- Backlit Display
- Wallplate Furnished
- Simple Up and Down Temperature Control

Bacnet Compatible Thermostat With Reheat Function

- 7-Day Programmable
- For units with or without Humiditrol®
- BTL listed MS/TP ensures compatibility with any BACnet system
- Built-in control programs for conventional and heat pump applications
- Conventional systems up to 3-stage heat and 3-stage cool
- Heat pumps with 1 or 2 compressors and up to 2-stage auxiliary heat
- On-board temperature and humidity sensor
- Multiple configurable inputs and outputs enable advanced control strategies
- Set-up Wizard enables rapid system configuration
- No special tools required for installation or commissioning
- Seven-day (2, 4 or 6 event) occupancy scheduling per day
- Backlit 5-inch LCD touchscreen

Description		Catalog No.
ComfortSense® 7500 Commercial 7-Day Programmable Thermostat		
CS7500 7-Day Thermostat		**17G74**
Sensors/ Accessories	[1] Remote non-adjustable wall-mount 20k	**47W36**
	[1] Remote non-adjustable wall-mount 10k	**47W37**
	Remote non-adjustable discharge air (duct mount)	**19L22**
	Outdoor temperature sensor	**X2658**
ComfortSense® 3000 5-2 Day Programmable		
CS3000 5-2 Day Thermostat		**11Y05**
Sensor/ Accessories	Remote non-adjustable wall mount 10k averaging	**47W37**
	Thermostat wall mounting plate	**X2659**
BACnet Controls	[2] 7-Day BACnet Thermostat	**Y8241**
	[3] BACnet Module (factory or field)	**16X72**
[4] BACnet Room Sensors	With Display	**97W23**
	Without Display	**97W24**
Universal Thermostat Guard with Lock (clear)		
	Inside Dimensions (H x W) 5 7/8 x 8 3/8 in.	**39P21**

[1] Remote wall-mount sensors can be applied in any of the following combinations:
One Sensor - (1) 47W36, Two Sensors - (2) 47W37, Three Sensors - (2) 47W36 and (1) 47W37
Four Sensors - (4) 47W36, Five Sensors - (3) 47W36 and (2) 47W37

[2] BACnet Thermostat (Y8241) will control units with and without the Humiditrol® option. If there is a mix of units equipped with and without Humiditrol on the same site, this thermostat can be used for all units if suitable.

[3] Not compatible with units equipped with Humiditrol® option.

[4] Only compatible with BACnet Module (16X70).

HUMIDITROL® DEHUMIDIFICATION SYSTEM OPTION

OVERVIEW

NOTE - Not available with Environ™ Coil System. Conventional Fin/Tube condenser coil must be ordered as a factory option.

- Factory installed option designed to control humidity
- Provides dehumidification on demand using ASHRAE 90.1 recommended method for comfort conditioning humidity control
- Unit comes equipped with one row reheat coil, solenoid valve and humidity controller
- A thermostat with a dehumidification output, a dehumidistat, or a DDC controller with an isolated output is required to control humidity and must be located in the occupied space

BENEFITS

- Improves indoor air quality
- Helps prevent damage due to high humidity levels
- Improves comfort levels by reducing space humidity levels

OPERATION

No Dehumidification Demand

- The unit will operate conventionally whenever there is a demand for cooling or heating and no dehumidification demand
- Free cooling is only permitted when there is no demand for dehumidification

Dehumidification Demand Only

- Dehumidification is initiated by an output from a dehumidistat (furnished), an optional thermostat with a dehumidification output or an optional DDC controller with an isolated output to control humidity
- Reheat operation will initiate on a dehumidification demand and does not require a cooling demand
- The unit will operate in the dehumidification mode until the relative humidity of the conditioned space is below the setpoint
- This reduces sensible cooling capacity and extends compressor run time to control humidity when the cooling load is low
- A solenoid valve diverts hot gas from the compressor to the reheat coil
- The cooled and dehumidified air from the evaporator is reheated as it passes through the reheat coil
- The de-superheated and partially condensed refrigerant continues to the outdoor condenser coil where condensing is completed
- The unit will continue to operate in this mode until the dehumidification demand is satisfied

Options/Accessories

Field Installed

Dehumidistat

- Remote mounted dehumidistat for factory installed Humiditrol® Dehumidification option
- Adjustable 20-80%

NOTE - A thermostat with a dehumidification output or a DDC controller with an isolated output can be used instead.

NOTE - See Conventional Thermostat Control Systems on page 12 for additional Humiditrol® Dehumidification control options.

REFRIGERANT SCHEMATIC (180S and 210S MODELS ONLY)

NOTE: Refrigerant circuits one and two operates when there is a first−stage thermostat demand.

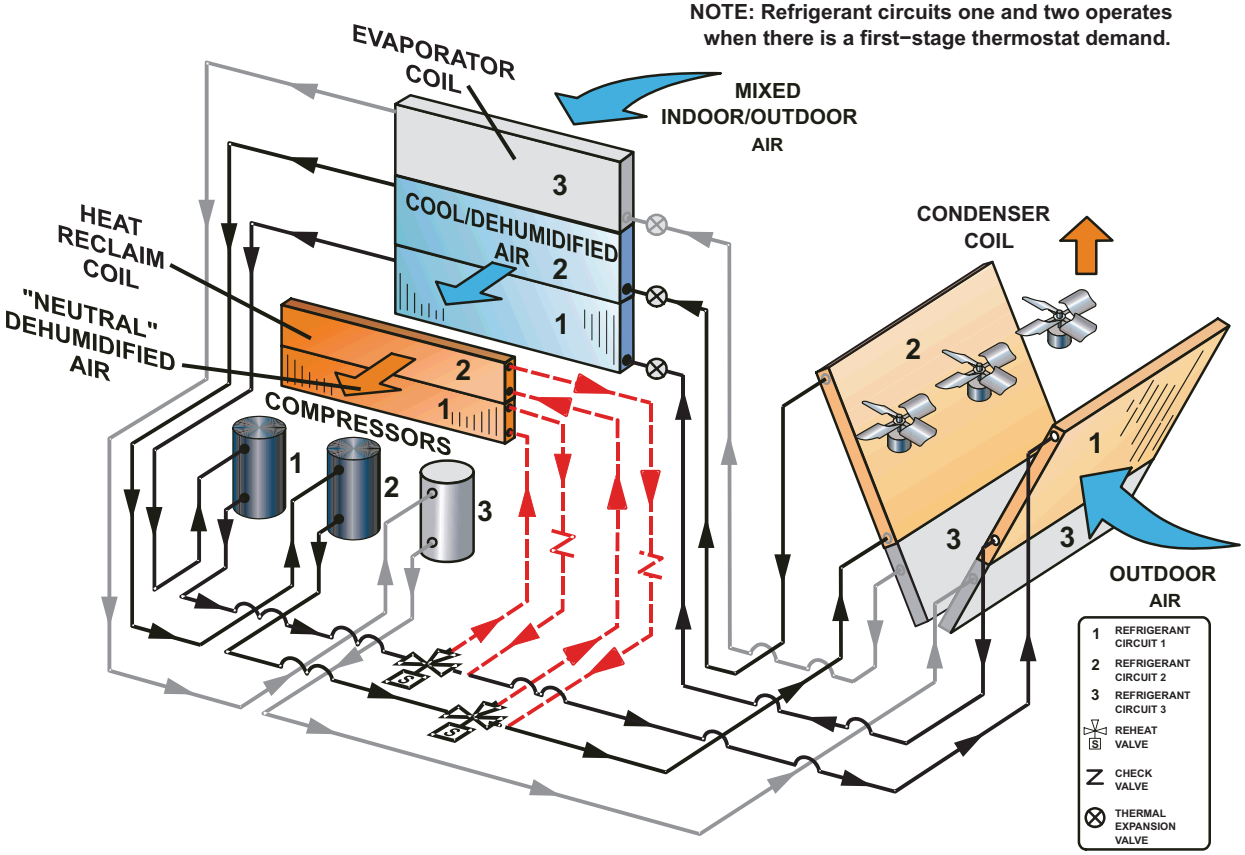

REFRIGERANT SCHEMATIC (240S and 300S MODELS ONLY)

NOTE: Refrigerant circuits one and two operates when there is a first- stage thermostat demand.

NOTE: 300S model has six fans.

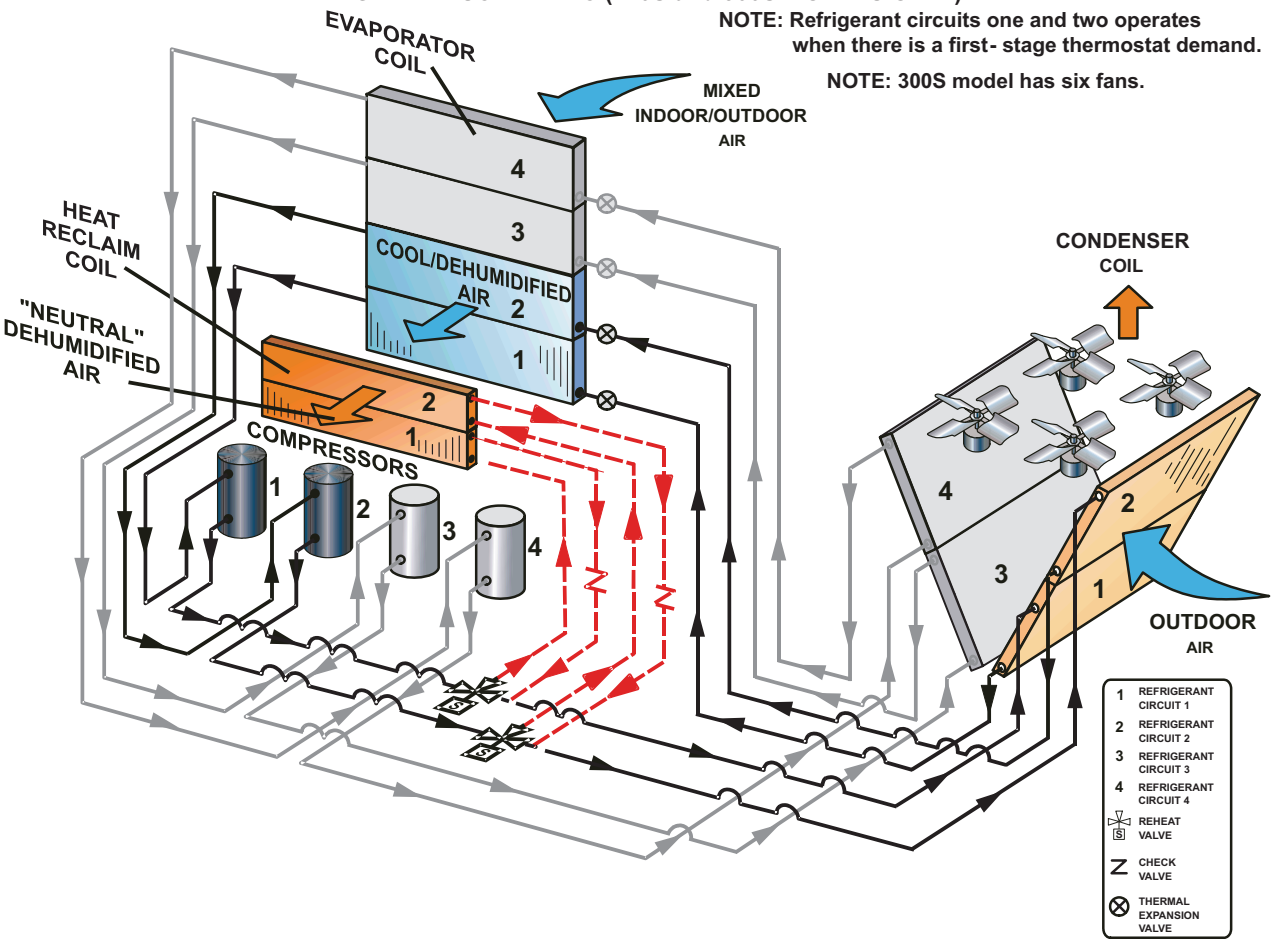

OPTIONS / ACCESSORIES — STANDARD AND HIGH EFFICIENCY MODELS

Item Description		Catalog Number	Unit Model No. KGA 156	KGA KGB 180	KGA KGB 210	KGA KGB 240	KGB 300
COOLING SYSTEM							
Condensate Drain Trap	PVC	**22H54**	X	X	X	X	X
	Copper	**76W27**	X	X	X	X	X
Corrosion Protection		Factory	O	O	O	O	O
Drain Pan Overflow Switch	-	**10C24**	X	X	X	X	X
Efficiency	Standard or High	Factory	O	O	O	O	O
Refrigerant Type		R-410A	O	O	O	O	O
HEATING SYSTEM							
Bottom Gas Piping Kit		**85M31**	X	X	X	X	X
Combustion Air Intake Extensions (order two)		**89L97**	X	X	X	X	X
Gas Heat Input	Standard - 260,000 Btuh	Factory	O	O	O	O	O
	Medium - 360,000 Btuh	Factory	O	O	O	O	O
	High - 480,000 Btuh	Factory		O	O	O	O
Low Temperature Vestibule Heater	208/230V-3ph	**22H58**	X	X	X	X	X
	460V	**22H59**	X	X	X	X	X
	575V	**22V43**	X	X	X	X	X
LPG/Propane Conversion Kits (Order 2 kits)	Standard heat	**14N28**	X	X	X	X	X
	Medium heat	**14N29**	X	X	X	X	X
	High heat	**14N30**		X	X	X	X
Stainless Steel Heat Exchanger		Factory	O	O	O	O	O
Vertical Vent Extension Kit		**42W16**	X	X	X	X	X
BLOWER - SUPPLY AIR							
Blower Option	CAV (Constant Air Volume)	Factory	O	O	O	O	O
	MSAV® Multi-Stage Air Volume	Factory	O	O	O	O	O
Motors - Constant Air Volume (CAV)	Belt Drive (standard efficiency) - 2 hp	Factory	O				
	Belt Drive (standard efficiency) - 3 hp	Factory	O	O	O		
	Belt Drive (standard efficiency) - 5 hp	Factory	O	O	O	O	O
	Belt Drive (standard efficiency) - 7.5 hp	Factory		O	O	O	O
	Belt Drive (standard efficiency) - 10 hp	Factory				O	O
Motors - MSAV® Multi-Stage Air Volume	Belt Drive (standard efficiency) - 2 hp	Factory	O				
	Belt Drive (standard efficiency) - 3 hp	Factory	O	O	O		
	Belt Drive (standard efficiency) - 5 hp	Factory	O	O	O	O	O
	Belt Drive (standard efficiency) - 7.5 hp	Factory		O	O	O	O
	Belt Drive (standard efficiency) - 10 hp	Factory				O	O
VFD Manual Bypass Kit (for MSAV® Multi-Stage Air Volume equipped units)	2, 3, 5 hp (208/230V) 2, 3, 5, 7.5, 10 hp (460V and 575V)	**90W52**	X	X	X	X	X
	7.5, 10 hp (208/230V)	**90W51**		X	X	X	X
Drive Kits See Blower Data Tables for usage and selection	Kit #1 535-725 rpm	Factory	O	O	O		
	Kit #2 710-965 rpm	Factory	O	O	O		
	Kit #3 685-856 rpm	Factory	O	O	O	O	O
	Kit #4 850-1045 rpm	Factory	O	O	O	O	O
	Kit #5 945-1185 rpm	Factory	O	O	O	O	O
	Kit #6 850-1045 rpm	Factory		O	O	O	O
	Kit #7 945-1185 rpm	Factory		O	O	O	O
	Kit #8 1045-1285 rpm	Factory		O	O	O	O
	Kit #10 1045-1285 rpm	Factory				O	O
	Kit #11 1135-1365 rpm	Factory				O	O

NOTE - Catalog numbers shown are for ordering field installed accessories.
OX - Configure To Order (Factory Installed) or Field Installed
O = Configure To Order (Factory Installed)
X = Field Installed

OPTIONS / ACCESSORIES — STANDARD AND HIGH EFFICIENCY MODELS

Item Description		Catalog Number	Unit Model No. KGA 156	KGA KGB 180	KGA KGB 210	KGA KGB 240	KGB 300
CABINET							
Hinged Access Panels		Factory	O	O	O	O	O
CONTROLS							
NOTE - Also see Conventional Thermostat Control Systems page 12 for Additional Options.							
Smoke Detector - Supply or Return (Power board and one sensor)		**22H56**	X	X	X	X	X
Smoke Detector - Supply and Return (Power board and two sensors)		**22H57**	X	X	X	X	X
ELECTRICAL							
Voltage 60 hz	208/230V - 3 phase	Factory	O	O	O	O	O
	460V - 3 phase	Factory	O	O	O	O	O
	575V - 3 phase	Factory	O	O	O	O	O
Disconnect Switch (see Disconnect Table for usage, page 42)	80 amp	**54W91**	OX	OX	OX	OX	OX
	150 amp	**54W92**	OX	OX	OX	OX	OX
	250 amp	**54W93**					OX
GFI Service Outlets	15 amp non-powered, field-wired (208/230V, 460V only)	**74M70**	X	OX	OX	OX	OX
	20 amp non-powered, field-wired (575V only)	**67E01**	X	X	X	X	X
Weatherproof Cover for GFI		**10C89**	X	X	X	X	X
[1] Phase Monitor		**10C25**	X	X	X	X	X
INDOOR AIR QUALITY							
Air Filters							
Healthy Climate® High Efficiency Air Filters 24 x 24 x 2 in. (Order 6 per unit)	MERV 8	**54W67**	X	X	X	X	X
	MERV 13	**52W40**	X	X	X	X	X
Replacement Media Filter With Metal Mesh Frame (includes non-pleated filter media)		**44N61**	X	X	X	X	X
Indoor Air Quality (CO_2) Sensors							
Sensor - Wall-mount, off-white plastic cover with LCD display		**77N39**	X	X	X	X	X
Sensor - Wall-mount, off-white plastic cover, no display		**87N53**	X	X	X	X	X
Sensor - Black plastic case with LCD display, rated for plenum mounting		**87N52**	X	X	X	X	X
Sensor - Wall-mount, black plastic case, no display, rated for plenum mounting		**87N54**	X	X	X	X	X
CO_2 Sensor Duct Mounting Kit - for downflow applications		**85L43**	X	X	X	X	X
Aspiration Box - for duct mounting non-plenum rated CO_2 sensors (**87N53** or **77N39**)		**90N43**	X	X	X	X	X
Needlepoint Bipolar Ionization (NPBI)							
Needlepoint Bipolar Ionization (NPBI) Kits		**21U37**	X	X	X		
		21U38				X	
		21U39					X
UVC Germicidal Light Kit							
[2] Healthy Climate® UVC Light Kit (110/230V-1ph)		**21A94**	X	X	X	X	X
Step-Down Transformers	460V primary, 230V secondary	**10H20**	X	X	X	X	X
	575V primary, 230V secondary	**10H21**	X	X	X	X	X

[1] Factory installed on all MSAV® Multi-Stage Air Volume equipped units.
[2] Lamps operate on 110-230V single-phase power supply. Step-down transformer may be ordered separately for 460V and 575V units. Alternately, 110V power supply may be used to directly power the UVC ballast(s)

NOTE - Catalog numbers shown are for ordering field installed accessories.
OX - Configure To Order (Factory Installed) or Field Installed
O = Configure To Order (Factory Installed)
X = Field Installed

Item Description	Catalog Number	Unit Model No. KGA 156	KGA KGB 180	KGA KGB 210	KGA KGB 240	KGB 300
ECONOMIZER						
Standard Economizer With Outdoor Air Hood (Not for Title 24)						
Standard Economizer Downflow or Horizontal Applications - Includes Outdoor Air Hood, order Downflow or Horizontal Barometric Relief Dampers separately	**13U48**	OX	OX	OX	OX	OX
Standard Economizer Controls (Not for Title 24)						
Single Enthalpy Control	**21Z09**	OX	OX	OX	OX	OX
Differential Enthalpy Control (order 2)	**21Z09**	X	X	X	X	X
High Performance Economizer With Outdoor Air Hood (Approved for California Title 24 Building Standards / AMCA Class 1A Certified)						
High Performance Economizer Downflow or Horizontal Applications - Includes Outdoor Air Hood, order Downflow or Horizontal Barometric Relief Dampers separately	**23G24**	OX	OX	OX	OX	OX
High Performance Economizer Controls (Not for Title 24)						
Single Enthalpy Control	**23G26**	OX	OX	OX	OX	OX
Differential Enthalpy Control (order 2)	**23G26**	X	X	X	X	X
Barometric Relief Dampers With Exhaust Hood						
Downflow Barometric Relief Dampers	**54W78**	OX	OX	OX	OX	OX
Horizontal Barometric Relief Dampers	**16K99**	X	X	X	X	X
Economizer Accessories						
WLAN Stick (For High Performance Economizer only)	**23K58**	X	X	X	X	X
OUTDOOR AIR						
Outdoor Air Dampers With Outdoor Air Hood						
Motorized	**22J27**	OX	OX	OX	OX	OX
Manual	**13U05**	OX	OX	OX	OX	OX
[1] POWER EXHAUST (DOWNFLOW APPLICATIONS ONLY)						
Standard Static, SCCR Rated 208/230V	**22H90**	X	X	X	X	X
460V	**22H91**	X	X	X	X	X
575V	**22V34**	X	X	X	X	X

NOTE - Catalog numbers shown are for ordering field installed accessories.
OX - Configure To Order (Factory Installed) or Field Installed
O = Configure To Order (Factory Installed)
X = Field Installed

Item Description		Catalog Number	Unit Model No. KGA 156	KGA KGB 180	KGA KGB 210	KGA KGB 240	KGB 300
ROOF CURBS							
Hybrid Roof Curbs, Downflow							
8 in. height		**11F58**	X	X	X	X	X
14 in. height		**11F59**	X	X	X	X	X
18 in. height		**11F60**	X	X	X	X	X
24 in. height		**11F61**	X	X	X	X	X
Adjustable Pitch Curb							
14 in. height		**43W26**	X	X	X	X	X
Standard Roof Curbs, Horizontal - Requires Horizontal Return Air Panel Kit							
26 in. height - slab applications		**11T89**	X	X	X	X	
30 in. height - slab applications		**11T90**					X
37 in. height - rooftop applications		**11T96**	X	X	X	X	
41 in. height - rooftop applications		**11T97**					X
Insulation Kit For Standard Horizontal Curbs							
For 26 in. Curb		**73K32**	X	X	X	X	
For 30 in. Curb		**73K33**					X
For 37 in. Curb		**73K34**	X	X	X	X	
For 41 in. Curb		**73K35**					X
Horizontal Return Air Panel Kit							
Required for Horizontal Applications with Roof Curb		**87M00**	X	X	X	X	X
CEILING DIFFUSERS							
Step-Down - Order one	RTD11-185S	**13K63**	X	X			
	RTD11-275S	**13K64**			X	X	X
Flush - Order one	FD11-185S	**13K58**	X	X			
	FD11-275S	**13K59**			X	X	X
Transitions (Supply and Return) - Order one	C1DIFF33C-1	**12X68**	X	X			
	C1DIFF34C-1	**12X70**			X	X	X

[1] Field installed Power Exhaust requires Economizer with Outdoor Air Hood and Downflow Barometric Relief Dampers with Exhaust Hood. Must be ordered separately.

NOTE - Catalog numbers shown are for ordering field installed accessories.
OX - Configure To Order (Factory Installed) or Field Installed
O = Configure To Order (Factory Installed)
X = Field Installed

OPTIONS / ACCESSORIES — STANDARD EFFICIENCY MODELS ONLY

Item Description	Model Number	Catalog Number	Unit Model No. KGB 180S	KGB 210S	KGB 240S	KGB 300S
COOLING SYSTEM						
Conventional Fin/Tube Condenser Coil (replaces Environ™ Coil System) (Required for Humiditrol® Dehumidification option)		Factory	O	O	O	O
Low Ambient Control	30°F - K1LOAM53C11	**10T63**	X	X		
	30°F - K1LOAM53C21	**10T64**			X	
	30°F - K1LOAM54C21	**10T65**				X
	0°F - K1LOAM63C11	**18B95**	X	X		
	0°F - K1LOAM63C21	**18B96**			X	
	0°F - K1LOAM64C31	**18B98**				X
CABINET						
Combination Coil/Hail Guards	Environ™ Coil System - C1GARD52C12	**15T92**	X	X		
	Environ™ Coil System - C1GARD52C22	**15T93**			X	X
	Conventional Fin/Tube Condenser Coil - C1GARD51C11	**13T08**	X	X		
	Conventional Fin/Tube Condenser Coil - C1GARD51C21	**13T12**			X	X
HUMIDITROL® DEHUMIDIFICATION REHEAT OPTION						
Humiditrol® Dehumidification Option		Factory	O	O	O	O
[1] Dehumidistat, Remote Mounted	C0SNSR30FF1L	**99N41**	X	X	X	X

[1] A thermostat with a dehumidification output or a DDC controller with an isolated output can be used instead.

NOTE - Catalog and model numbers shown are for ordering field installed accessories.
OX - Configure To Order (Factory Installed) or Field Installed
O = Configure To Order (Factory Installed)
X = Field Installed

OPTIONS / ACCESSORIES - HIGH EFFICIENCY MODELS ONLY

Item Description	Model Number	Catalog Number	Unit Model No. KGA 156H	KGA 180H	KGA 210H	KGA 240H
COOLING SYSTEM						
Low Ambient Control	30°F - K1LOAM53C11	**10T63**	X			
	30°F - K1LOAM53C21	**10T64**		X	X	
	30°F - K1LOAM54C21	**10T65**				X
	0°F - K1LOAM63C11	**18B95**	X			
	0°F - K1LOAM63C21	**18B96**		X		
	0°F - K1LOAM63C31	**18B97**			X	
	0°F - K1LOAM64C31	**18B98**				X
CABINET						
Combination Coil/Hail Guards	Environ™ Coil System - C1GARD52C12	**15T92**	X			
	Environ™ Coil System - C1GARD52C22	**15T93**		X	X	X
	Conventional Fin/Tube Condenser Coil - C1GARD51C11	**13T08**	X			
	Conventional Fin/Tube Condenser Coil - C1GARD51C21	**13T12**		X	X	X

NOTE - Catalog and model numbers shown are for ordering field installed accessories.
OX - Configure To Order (Factory Installed) or Field Installed
O = Configure To Order (Factory Installed)
X = Field Installed

SPECIFICATIONS - STANDARD EFFICIENCY

General Data	Nominal Tonnage	15 Ton	15 Ton	17.5 Ton	17.5 Ton
	Model Number	KGB180S4B	KGB180S4M	KGB210S4B	KGB210S4M
	Efficiency Type	Standard	Standard	Standard	Standard
	Blower Type	CAV (Constant Air Volume)	MSAV® Multi-Stage Air Volume	CAV (Constant Air Volume)	MSAV® Multi-Stage Air Volume
Cooling Performance	Gross Cooling Capacity - Btuh	182,000	182,000	206,000	206,000
	[1] Net Cooling Capacity - Btuh	176,000	176,000	200,000	200,000
	AHRI Rated Air Flow - cfm	6000	6000	5700	5700
	Total Unit Power - kW	16.3	16.3	18.5	18.5
	[1] EER (Btuh/Watt)	10.8	10.8	10.8	10.8
	[2] IEER (Btuh/Watt)	12.2	13.6	12.2	13.3
Refrigerant Charge	Refrigerant Type	R-410A	R-410A	R-410A	R-410A
	Environ™ Coil System Circuit 1	5 lbs. 14 oz.	5 lbs. 14 oz.	6 lbs. 8 oz.	6 lbs. 8 oz.
	Circuit 2	5 lbs. 11 oz.	5 lbs. 11 oz.	6 lbs. 4 oz.	6 lbs. 4 oz.
	Circuit 3	5 lbs. 13 oz.	5 lbs. 13 oz.	6 lbs. 2 oz.	6 lbs. 2 oz.
	Conventional Fin/Tube Coil Option Circuit 1	12 lbs. 7 oz.	12 lbs. 7 oz.	11 lbs. 0 oz.	11 lbs. 0 oz.
	Circuit 2	12 lbs. 0 oz.	12 lbs. 0 oz.	11 lbs. 0 oz.	11 lbs. 0 oz.
	Circuit 3	11 lbs. 3 oz.	11 lbs. 3 oz.	11 lbs. 0 oz.	11 lbs. 0 oz.
	Conventional Fin/Tube with Humiditrol® Option Circuit 1	12 lbs. 10 oz.	12 lbs. 10 oz.	10 lbs. 10 oz.	10 lbs. 10 oz.
	Circuit 2	12 lbs. 10 oz.	12 lbs. 10 oz.	10 lbs. 15 oz.	10 lbs. 15 oz.
	Circuit 3	11 lbs. 12 oz.	11 lbs. 12 oz.	10 lbs. 7 oz.	10 lbs. 7 oz.
Gas Heat Available		See page 24			
Compressor Type (number)		Scroll (3)	Scroll (2)	Scroll (3)	Scroll (3)
Outdoor Coils Environ™ (Fin/Tube)	Net face area (total) - sq. ft.	41.4	41.4	41.4	41.4
	Number of rows	1 (2)	1 (2)	1 (2)	1 (2)
	Fins per inch	23 (20)	23 (20)	23 (20)	23 (20)
Outdoor Coil Fans	Motor - (No.) horsepower	(3) 1/3	(3) 1/3	(3) 1/3	(3) 1/3
	Motor rpm	1075	1075	1075	1075
	Total Motor watts	1100	1100	1100	1100
	Diameter - (No.) in.	(3) 24	(3) 24	(3) 24	(3) 24
	Number of blades	3	3	3	3
	Total Air volume - cfm	12,000	12,000	12,000	12,000
Indoor Coils	Net face area (total) - sq. ft.	21.4	21.4	21.4	21.4
	Tube diameter - in.	3/8	3/8	3/8	3/8
	Number of rows	3	3	4	4
	Fins per inch	14	14	14	14
	Drain connection - No. and size	(1) 1 in. FPT	(1) 1 in. FPT	(1) 1 in. FPT	(1) 1 in. FPT
	Expansion device type	Refrigerant Metering Orifice (RFC) - No Humiditrol® Option Balanced port TXV, removable head - Humiditrol® Option			
[3] Indoor Blower and Drive Selection	Nominal motor output	3 hp, 5 hp, 7.5 hp			
	Maximum usable motor output (US Only)	3.45 hp, 5.75 hp, 8.63 hp			
	Motor - Drive kit number	**3 hp** **Kit 1** 535-725 rpm **Kit 2** 710-965 rpm **5 hp** **Kit 3** 685-856 rpm **Kit 4** 850-1045 rpm **Kit 5** 945-1185 rpm **7.5 hp** **Kit 6** 850-1045 rpm **Kit 7** 945-1185 rpm **Kit 8** 1045-1285 rpm			
	Blower wheel nominal diameter x width - in.	(2) 15 x 15	(2) 15 x 15	(2) 15 x 15	(2) 15 x 15
Filters	Type of filter	Fiberglass, disposable			
	Number and size - in.	(6) 24 x 24 x 2			
Electrical characteristics		208/230V, 460V or 575V - 60 hertz - 3 phase			

NOTE - Net capacity includes evaporator blower motor heat deduction. Gross capacity does not include evaporator blower motor heat deduction.

[1] AHRI Certified to AHRI Standard 340/360; 95°F outdoor air temperature and 80°F db/67°F wb entering evaporator air; minimum external duct static pressure.

[2] Integrated Energy Efficiency Ratio tested according to AHRI Standard 340/360.

[3] Using total air volume and system static pressure requirements determine from blower performance tables rpm and motor output required. Maximum usable output of motors furnished are shown. In Canada, nominal motor output is also maximum usable motor output. If motors of comparable output are used, be sure to keep within the service factor limitations outlined on the motor nameplate.

NOTE – Units equipped with MSAV® Multi-Stage Air Volume option are limited to a motor service factor of 1.0.

SPECIFICATIONS - STANDARD EFFICIENCY

General Data	Nominal Tonnage	20 Ton	20 Ton	25 Ton	25 Ton
	Model Number	KGB240S4B	KGB240S4M	KGB300S4B	KGB300S4M
	Efficiency Type	Standard	Standard	Standard	Standard
	Blower Type	CAV (Constant Air Volume)	MSAV® Multi-Stage Air Volume	CAV (Constant Air Volume)	MSAV® Multi-Stage Air Volume
Cooling Performance	Gross Cooling Capacity - Btuh	236,000	236,000	282,000	282,000
	[1] Net Cooling Capacity - Btuh	230,000	230,000	270,000	270,000
	AHRI Rated Air Flow - cfm	6000	6000	8400	8400
	Total Unit Power - kW	21.3	21.3	25.7	25.7
	[1] EER (Btuh/Watt)	10.8	10.8	10.5	10.5
	[2] IEER (Btuh/Watt)	12.2	13.4	11.4	13.8
Refrigerant Charge	Refrigerant Type	R-410A	R-410A	R-410A	R-410A
	Environ™ Coil System Circuit 1	7 lbs. 0 oz.	7 lbs. 0 oz.	6 lbs. 4 oz.	6 lbs. 4 oz.
	Circuit 2	6 lbs. 15 oz.	6 lbs. 15 oz.	5 lbs. 10 oz.	5 lbs. 10 oz.
	Circuit 3	6 lbs. 12 oz.	6 lbs. 12 oz.	6 lbs. 6 oz.	6 lbs. 6 oz.
	Circuit 4	- - -	- - -	6 lbs. 0 oz.	6 lbs. 0 oz.
	Conventional Fin/Tube Without Reheat Circuit 1	14 lbs. 0 oz.	14 lbs. 0 oz.	10 lbs. 8 oz.	10 lbs. 8 oz.
	Circuit 2	13 lbs. 12 oz.	13 lbs. 12 oz.	10 lbs. 0 oz.	10 lbs. 0 oz.
	Circuit 3	12 lbs. 0 oz.	12 lbs. 0 oz.	9 lbs. 12 oz.	9 lbs. 12 oz.
	Circuit 4	- - -	- - -	9 lbs. 12 oz.	9 lbs. 12 oz.
	Conventional Fin/Tube with Reheat Circuit 1	14 lbs. 10 oz.	14 lbs. 10 oz.	12 lbs. 12 oz.	12 lbs. 12 oz.
	Circuit 2	13 lbs. 4 oz.	13 lbs. 4 oz.	11 lbs. 12 oz.	11 lbs. 12 oz.
	Circuit 3	12 lbs. 14 oz.	12 lbs. 14 oz.	9 lbs. 12 oz.	9 lbs. 12 oz.
	Circuit 4	- - -	- - -	9 lbs. 12 oz.	9 lbs. 12 oz.
Gas Heat Available		See page 24			
Compressor Type (number)		Scroll (3)	Scroll (3)	Scroll (4)	Scroll (4)
Outdoor Coils Environ™ (Fin/Tube)	Net face area (total) - sq. ft.	55.2	55.2	55.2	55.2
	Number of rows	1 (2)	1 (2)	1 (2)	1 (2)
	Fins per inch	23 (20)	23 (20)	23 (20)	23 (20)
Outdoor Coil Fans	Motor - (No.) horsepower	(4) 1/3	(4) 1/3	(6) 1/3	(6) 1/3
	Motor rpm	1075	1075	1075	1075
	Total Motor watts	1665	1665	1950	1950
	Diameter - (No.) in.	(4) 24	(4) 24	(6) 24	(6) 24
	Number of blades	3	3	3	3
	Total Air volume - cfm	16,000	16,000	20,000	20,000
Indoor Coils	Net face area (total) - sq. ft.	21.4	21.4	21.4	21.4
	Tube diameter - in.	3/8	3/8	3/8	3/8
	Number of rows	4	4	4	4
	Fins per inch	14	14	14	14
	Drain connection - No. and size	(1) 1 in. FPT	(1) 1 in. FPT	(1) 1 in. FPT	(1) 1 in. FPT
	Expansion device type	Refrigerant Metering Orifice (RFC) - No Humiditrol® Option Balanced port TXV, removable head -Humiditrol® Option			
[3] Indoor Blower and Drive Selection	Nominal motor output	5 hp, 7.5 hp, 10 hp			
	Maximum usable motor output (US Only)	5.75 hp, 8.62 hp, 11.5 hp			
	Motor - Drive kit number	**5 hp** **Kit 3** 685-856 rpm **Kit 4** 850-1045 rpm **Kit 5** 945-1185 rpm **7.5 hp** **Kit 6** 850-1045 rpm **Kit 7** 945-1185 rpm **Kit 8** 1045-1285 rpm **10 hp** **Kit 7** 945-1185 rpm **Kit 10** 1045-1285 rpm **Kit 11** 1135-1365 rpm			
	Blower wheel nominal diameter x width - in.	(2) 15 x 15	(2) 15 x 15	(2) 15 x 15	(2) 15 x 15
Filters	Type of filter	Fiberglass, disposable			
	Number and size - in.	(6) 24 x 24 x 2			
Electrical characteristics		208/230V, 460V or 575V - 60 hertz - 3 phase			

NOTE - Net capacity includes evaporator blower motor heat deduction. Gross capacity does not include evaporator blower motor heat deduction.

[1] AHRI Certified to AHRI Standard 340/360; 95°F outdoor air temperature and 80°F db/67°F wb entering evaporator air; minimum external duct static pressure.

[2] Integrated Energy Efficiency Ratio tested according to AHRI Standard 340/360.

[3] Using total air volume and system static pressure requirements determine from blower performance tables rpm and motor output required. Maximum usable output of motors furnished are shown. In Canada, nominal motor output is also maximum usable motor output. If motors of comparable output are used, be sure to keep within the service factor limitations outlined on the motor nameplate.

NOTE – Units equipped with MSAV® Multi-Stage Air Volume option are limited to a motor service factor of 1.0.

SPECIFICATIONS - HIGH EFFICIENCY

General Data	**Nominal Tonnage**	**13 Ton**	**13 Ton**	**15 Ton**	**15 Ton**
	Model Number	**KGA156H4B**	**KGA156H4M**	**KGA180H4B**	**KGA180H4M**
	Efficiency Type	**High**	**High**	**High**	**High**
	Blower Type	CAV (Constant Air Volume)	MSAV® Multi-Stage Air Volume	CAV (Constant Air Volume)	MSAV® Multi-Stage Air Volume
Cooling Performance	Gross Cooling Capacity - Btuh	154,000	154,000	176,000	176,000
	[1] Net Cooling Capacity - Btuh	150,000	150,000	172,000	172,000
	AHRI Rated Air Flow - cfm	5000	5000	5250	5250
	Total Unit Power - kW	12.5	12.5	14.3	14.3
	[1] EER (Btuh/Watt)	12.0	12.0	12.0	12.0
	[2] IEER (Btuh/Watt)	13.2	14.1	13.5	13.7
Refrigerant Charge	Refrigerant Type	R-410A	R-410A	R-410A	R-410A
	Circuit 1	5 lbs. 12 oz.	5 lbs. 12 oz.	6 lbs. 0 oz.	6 lbs. 0 oz.
	Circuit 2	5 lbs. 4 oz.	5 lbs. 4 oz.	5 lbs. 10 oz.	5 lbs. 10 oz.
	Circuit 3	5 lbs. 10 oz.	5 lbs. 10 oz.	5 lbs. 14 oz.	5 lbs. 14 oz.
Gas Heat Available		See page 24			
Compressor Type (number)		Scroll (3)	Scroll (3)	Scroll (3)	Scroll (3)
Outdoor Coils	Net face area (total) - sq. ft.	41.4	41.4	55.2	55.2
	Number of rows	1	1	1	1
	Fins per inch	23	23	23	23
Outdoor Coil Fans	Motor - (No.) horsepower	(3) 1/3	(3) 1/3	(4) 1/3	(4) 1/3
	Motor rpm	1075	1075	1075	1075
	Total Motor watts	1100	1100	1500	1500
	Diameter - (No.) in.	(3) 24	(3) 24	(4) 24	(4) 24
	Number of blades	3	3	3	3
	Total Air volume - cfm	12,000	12,000	16,000	16,000
Indoor Coils	Net face area (total) - sq. ft.	21.4	21.4	21.4	21.4
	Tube diameter - in.	3/8	3/8	3/8	3/8
	Number of rows	3	3	3	3
	Fins per inch	14	14	14	14
	Drain connection - No. and size	(1) 1 in. FPT	(1) 1 in. FPT	(1) 1 in. FPT	(1) 1 in. FPT
	Expansion device type	Balanced port TXV, removable head			
[3] **Indoor Blower and Drive Selection**	Nominal motor output	2 hp, 3 hp, 5 hp		3 hp, 5 hp, 7.5 hp	
	Maximum usable motor output (US Only)	2.3 hp, 3.45 hp, 5.75 hp		3.45 hp, 5.75 hp, 8.62 hp	
	Motor - Drive kit number	**2 hp** **Kit 1** 535-725 rpm **Kit 2** 710-965 rpm **3 hp** **Kit 1** 535-725 rpm **Kit 2** 710-965 rpm **5 hp** **Kit 3** 685-856 rpm **Kit 4** 850-1045 rpm **Kit 5** 945-1185 rpm		**3 hp** **Kit 1** 535-725 rpm **Kit 2** 710-965 rpm **5 hp** **Kit 3** 685-856 rpm **Kit 4** 850-1045 rpm **Kit 5** 945-1185 rpm **7.5 hp** **Kit 6** 850-1045 rpm **Kit 7** 945-1185 rpm **Kit 8** 1045-1285 rpm	
	Blower wheel nominal diameter x width - in.	(2) 15 x 15	(2) 15 x 15	(2) 15 x 15	(2) 15 x 15
Filters	Type of filter	Fiberglass, disposable			
	Number and size - in.	(6) 24 x 24 x 2			
Electrical characteristics		208/230V, 460V or 575V - 60 hertz - 3 phase			

NOTE - Net capacity includes evaporator blower motor heat deduction. Gross capacity does not include evaporator blower motor heat deduction.

[1] AHRI Certified to AHRI Standard 340/360; 95°F outdoor air temperature and 80°F db/67°F wb entering evaporator air; minimum external duct static pressure.

[2] Integrated Energy Efficiency Ratio tested according to AHRI Standard 340/360.

[3] Using total air volume and system static pressure requirements determine from blower performance tables rpm and motor output required. Maximum usable output of motors furnished are shown. In Canada, nominal motor output is also maximum usable motor output. If motors of comparable output are used, be sure to keep within the service factor limitations outlined on the motor nameplate.

NOTE – Units equipped with MSAV® Multi-Stage Air Volume option are limited to a motor service factor of 1.0.

SPECIFICATIONS - high EFFICIENCY

General Data	Nominal Tonnage	17.5 Ton	17.5 Ton	20 Ton	20 Ton
	Model Number	**KGA210H4B**	**KGA210H4M**	**KGA240H4B**	**KGA240H4M**
	Efficiency Type	**High**	**High**	**High**	**High**
	Blower Type	CAV (Constant Air Volume)	MSAV® Multi-Stage Air Volume	CAV (Constant Air Volume)	MSAV® Multi-Stage Air Volume
Cooling Performance	Gross Cooling Capacity - Btuh	204,000	204,000	238,000	238,000
	[1] Net Cooling Capacity - Btuh	194,000	194,000	230,000	230,000
	AHRI Rated Air Flow - cfm	6125	6125	6400	6400
	Total Unit Power - kW	16.5	16.5	19.2	19.2
	[1] EER (Btuh/Watt)	12.0	12.0	12.0	12.0
	[2] IEER (Btuh/Watt)	13.0	14.0	13.2	14.5
Refrigerant Charge	Refrigerant Type	R-410A	R-410A	R-410A	R-410A
	Circuit 1	6 lbs. 12 oz.	6 lbs. 12 oz.	6 lbs. 4 oz.	6 lbs. 4 oz.
	Circuit 2	6 lbs. 14 oz.	6 lbs. 14 oz.	6 lbs. 2 oz.	6 lbs. 2 oz.
	Circuit 3	6 lbs. 14 oz.	6 lbs. 14 oz.	5 lbs. 14 oz.	5 lbs. 14 oz.
	Circuit 4	- - -	- - -	5 lbs. 6 oz.	5 lbs. 6 oz.
Gas Heat Available		See page 24			
Compressor Type (number)		Scroll (3)	Scroll (3)	Scroll (4)	Scroll (4)
Outdoor Coils	Net face area (total) - sq. ft.	55.2	55.2	55.2	55.2
	Number of rows	1	1	1	1
	Fins per inch	23	23	23	23
Outdoor Coil Fans	Motor - (No.) horsepower	(6) 1/3	(6) 1/3	(6) 1/3	(6) 1/3
	Motor rpm	1075	1075	1075	1075
	Total Motor watts	1950	1950	1950	1950
	Diameter - (No.) in.	(6) 24	(6) 24	(6) 24	(6) 24
	Number of blades	3	3	3	3
	Total Air volume - cfm	20,000	20,000	20,000	20,000
Indoor Coils	Net face area (total) - sq. ft.	21.4	21.4	21.4	21.4
	Tube diameter - in.	3/8	3/8	3/8	3/8
	Number of rows	4	4	4	4
	Fins per inch	14	14	14	14
	Drain connection - No. and size	(1) 1 in. FPT	(1) 1 in. FPT	(1) 1 in. FPT	(1) 1 in. FPT
	Expansion device type	Balanced port TXV, removable head			
[3] **Indoor Blower and Drive Selection**	Nominal motor output	3 hp, 5 hp, 7.5 hp		5 hp, 7.5 hp, 10hp	
	Maximum usable motor output (US Only)	3.45 hp, 5.75 hp, 8.62 hp		5.75 hp, 8.62 hp, 11.5 hp	
	Motor - Drive kit number	**3 hp** **Kit 1** 535-725 rpm **Kit 2** 710-965 rpm **5 hp** **Kit 3** 685-856 rpm **Kit 4** 850-1045 rpm **Kit 5** 945-1185 rpm **7.5 hp** **Kit 6** 850-1045 rpm **Kit 7** 945-1185 rpm **Kit 8** 1045-1285 rpm		**5 hp** **Kit 3** 685-856 rpm **Kit 4** 850-1045 rpm **Kit 5** 945-1185 rpm **7.5 hp** **Kit 6** 850-1045 rpm **Kit 7** 945-1185 rpm **Kit 8** 1045-1285 rpm **10 hp** **Kit 7** 945-1185 rpm **Kit 10** 1045-1285 rpm **Kit 11** 1135-1365 rpm	
	Blower wheel nominal diameter x width - in.	(2) 15 x 15	(2) 15 x 15	(2) 15 x 15	(2) 15 x 15
Filters	Type of filter	Fiberglass, disposable			
	Number and size - in.	(6) 24 x 24 x 2			
Electrical characteristics		208/230V, 460V or 575V - 60 hertz - 3 phase			

NOTE - Net capacity includes evaporator blower motor heat deduction. Gross capacity does not include evaporator blower motor heat deduction.

[1] AHRI Certified to AHRI Standard 340/360; 95°F outdoor air temperature and 80°F db/67°F wb entering evaporator air; minimum external duct static pressure.

[2] Integrated Energy Efficiency Ratio tested according to AHRI Standard 340/360.

[3] Using total air volume and system static pressure requirements determine from blower performance tables rpm and motor output required. Maximum usable output of motors furnished are shown. In Canada, nominal motor output is also maximum usable motor output. If motors of comparable output are used, be sure to keep within the service factor limitations outlined on the motor nameplate.

NOTE – Units equipped with MSAV® Multi-Stage Air Volume option are limited to a motor service factor of 1.0.

SPECIFICATIONS - GAS HEAT

Usage Data		Model Number	KGA156 KGA/KGB180 KGA/KGB210 KGA/KGB240 KGB300		KGA/KGB180 KGA/KGB210 KGA/KGB240 KGB300
		Heat Input Type	**Standard (S)**	**Medium (M)**	**High (H)**
		Number of Gas Heat Stages	2	2	2
Gas Heating Performance	Input - Btuh	First Stage	169,000	234,000	312,000
		Second Stage	260,000	360,000	480,000
	Output - Btuh	First Stage	- - -	- - -	- - -
		Second Stage	208,000	288,000	384,000
		Temperature Rise Range - °F	15 - 45	30 - 60	40 - 70
		Thermal Efficiency	80.0%	80.0%	80.0%
		Gas Supply Connections	1 in. npt	1 in. npt	1 in. npt
Recommended Gas Supply Pressure - in. w.g.		Natural	7	7	7
		LPG/Propane	11	11	11

HIGH ALTITUDE DERATE

Units may be installed at altitudes up to 2000 feet above sea level without any modification.
At altitudes above 2000 feet, units must be derated to match gas manifold pressures shown in table below.
At altitudes above 2000 feet unit must be derated to match gas manifold pressures shown in the table below.
NOTE – This is the only permissible derate for these units.

Gas Heat Type	Altitude - ft.	Gas Manifold Pressure - in. w.g.		Input Rate Natural Gas or LPG/Propane - Btuh	
		Natural Gas	**LPG/Propane Gas**	**First Stage**	**Second Stage**
Standard	2001 - 4500	3.4	9.6	169,000	249,000
Medium	2001 - 4500	3.4	9.6	234,000	345,000
High	2001 - 4500	3.4	9.6	312,000	460,000

NOTE - For Temperatures and Capacities not shown in tables, see bulletin - Cooling Unit Rating Table Correction Factor Data in Miscellaneous Engineering Data section.

15 TON STANDARD EFFICIENCY KGB180S4B (PART LOAD) - CONSTANT AIR VOLUME

Entering Wet Bulb Temperature	Total Air Volume	Outdoor Air Temperature Entering Outdoor Coil																			
		65°F					75°F					85°F					95°F				
		Total Cool Cap.	Comp. Motor Input	Sensible To Total Ratio (S/T) Dry Bulb			Total Cool Cap.	Comp. Motor Input	Sensible To Total Ratio (S/T) Dry Bulb			Total Cool Cap.	Comp. Motor Input	Sensible To Total Ratio (S/T) Dry Bulb			Total Cool Cap.	Comp. Motor Input	Sensible To Total Ratio (S/T) Dry Bulb		
	cfm	kBtuh	kW	75°F	80°F	85°F	kBtuh	kW	75°F	80°F	85°F	kBtuh	kW	75°F	80°F	85°F	kBtuh	kW	75°F	80°F	85°F
63°F	4800	127	5.43	0.66	0.78	0.9	122.2	6.16	0.67	0.79	0.92	116.8	6.92	0.68	0.81	0.94	111.2	7.77	0.69	0.83	0.97
	6000	134	5.48	0.7	0.84	0.97	128.7	6.2	0.71	0.85	0.99	123	6.98	0.72	0.88	1	116.9	7.83	0.74	0.9	1
	7200	139	5.52	0.73	0.89	1	133.5	6.24	0.75	0.92	1	127.5	7.01	0.77	0.94	1	121.1	7.86	0.79	0.97	1
67°F	4800	134	5.48	0.53	0.64	0.74	128.9	6.2	0.54	0.65	0.76	123.5	6.98	0.54	0.66	0.77	117.6	7.83	0.55	0.67	0.79
	6000	141.5	5.54	0.55	0.67	0.8	135.9	6.26	0.56	0.68	0.82	130	7.03	0.56	0.7	0.84	123.5	7.88	0.58	0.71	0.86
	7200	146.8	5.58	0.58	0.71	0.86	140.8	6.3	0.58	0.72	0.88	134.6	7.07	0.59	0.74	0.9	127.8	7.92	0.6	0.76	0.93
71°F	4800	140.7	5.53	0.41	0.52	0.61	135.3	6.25	0.42	0.52	0.62	129.7	7.03	0.41	0.53	0.63	124.1	7.89	0.42	0.53	0.64
	6000	148.6	5.6	0.42	0.54	0.65	142.7	6.31	0.42	0.54	0.66	136.6	7.09	0.42	0.55	0.68	130	7.95	0.43	0.56	0.69
	7200	154.1	5.65	0.43	0.56	0.69	148	6.36	0.43	0.57	0.7	141.3	7.13	0.43	0.58	0.72	134.4	7.98	0.44	0.59	0.74

15 TON STANDARD EFFICIENCY KGB180S4B (FULL LOAD) - CONSTANT AIR VOLUME

Entering Wet Bulb Temperature	Total Air Volume	Outdoor Air Temperature Entering Outdoor Coil																			
		85°F					95°F					105°F					115°F				
		Total Cool Cap.	Comp. Motor Input	Sensible To Total Ratio (S/T) Dry Bulb			Total Cool Cap.	Comp. Motor Input	Sensible To Total Ratio (S/T) Dry Bulb			Total Cool Cap.	Comp. Motor Input	Sensible To Total Ratio (S/T) Dry Bulb			Total Cool Cap.	Comp. Motor Input	Sensible To Total Ratio (S/T) Dry Bulb		
	cfm	kBtuh	kW	75°F	80°F	85°F	kBtuh	kW	75°F	80°F	85°F	kBtuh	kW	75°F	80°F	85°F	kBtuh	kW	75°F	80°F	85°F
63°F	4800	170.7	11.45	0.68	0.83	0.99	162.4	12.84	0.7	0.86	1	153.5	14.39	0.71	0.89	1	144.4	16.18	0.73	0.93	1
	6000	178.7	11.54	0.73	0.92	1	169.7	12.93	0.75	0.95	1	160.4	14.48	0.78	0.98	1	151.2	16.28	0.81	1	1
	7200	184.7	11.61	0.79	0.99	1	175.6	13	0.81	1	1	166.8	14.57	0.85	1	1	158.2	16.39	0.88	1	1
67°F	4800	180.4	11.56	0.54	0.66	0.79	171.4	12.95	0.55	0.67	0.82	162.3	14.51	0.56	0.69	0.85	152.8	16.29	0.57	0.71	0.88
	6000	188.6	11.66	0.56	0.71	0.88	179	13.05	0.58	0.72	0.91	169.1	14.6	0.59	0.75	0.95	159	16.4	0.6	0.78	0.98
	7200	194.5	11.73	0.59	0.76	0.96	184.2	13.11	0.61	0.79	0.99	173.7	14.67	0.62	0.82	1	163.2	16.46	0.64	0.86	1
71°F	4800	189.5	11.68	0.41	0.53	0.64	180.4	13.06	0.41	0.53	0.65	170.9	14.63	0.41	0.54	0.67	161.2	16.43	0.41	0.55	0.69
	6000	198.3	11.78	0.41	0.55	0.68	188.4	13.17	0.42	0.56	0.7	178	14.74	0.43	0.58	0.72	167.7	16.53	0.43	0.59	0.75
	7200	204.4	11.86	0.43	0.58	0.73	193.8	13.24	0.43	0.6	0.76	183.1	14.81	0.44	0.61	0.79	172	16.6	0.45	0.63	0.83

15 TON STANDARD EFFICIENCY KGB180S4M (PART LOAD) - MSAV® MULTI-STAGE AIR VOLUME SUPPLY AIR BLOWER

Entering Wet Bulb Temperature	Total Air Volume	Outdoor Air Temperature Entering Outdoor Coil																			
		65°F					75°F					85°F					95°F				
		Total Cool Cap.	Comp. Motor Input	Sensible To Total Ratio (S/T) Dry Bulb			Total Cool Cap.	Comp. Motor Input	Sensible To Total Ratio (S/T) Dry Bulb			Total Cool Cap.	Comp. Motor Input	Sensible To Total Ratio (S/T) Dry Bulb			Total Cool Cap.	Comp. Motor Input	Sensible To Total Ratio (S/T) Dry Bulb		
	cfm	kBtuh	kW	75°F	80°F	85°F	kBtuh	kW	75°F	80°F	85°F	kBtuh	kW	75°F	80°F	85°F	kBtuh	kW	75°F	80°F	85°F
63°F	3500	87	4.84	0.65	0.75	0.84	82.9	5.36	0.65	0.75	0.85	78.3	5.9	0.65	0.76	0.85	73.6	6.51	0.65	0.76	0.86
	4000	91	4.89	0.68	0.77	0.87	86.7	5.38	0.67	0.78	0.87	82	5.93	0.67	0.78	0.89	77.2	6.57	0.67	0.79	0.9
	4500	94.5	4.92	0.69	0.79	0.89	90	5.41	0.69	0.8	0.9	85.1	5.97	0.69	0.8	0.92	80	6.6	0.69	0.81	0.93
67°F	3500	92.5	4.89	0.54	0.64	0.72	87.9	5.39	0.54	0.63	0.72	83	5.95	0.53	0.63	0.73	78	6.57	0.52	0.63	0.73
	4000	96.2	4.93	0.55	0.65	0.74	91.5	5.44	0.54	0.65	0.75	86.6	5.98	0.54	0.65	0.75	81.5	6.6	0.53	0.65	0.76
	4500	99.6	4.97	0.56	0.67	0.76	94.8	5.46	0.55	0.67	0.77	89.8	6.02	0.55	0.67	0.77	84.4	6.65	0.54	0.67	0.78
71°F	3500	97.6	4.93	0.43	0.53	0.61	92.9	5.43	0.42	0.52	0.61	87.9	5.98	0.41	0.51	0.61	82.8	6.63	0.4	0.51	0.61
	4000	101.4	4.97	0.43	0.54	0.62	96.6	5.48	0.43	0.53	0.63	91.5	6.03	0.42	0.52	0.63	86.2	6.67	0.4	0.52	0.63
	4500	104.8	5.02	0.44	0.54	0.64	100	5.53	0.42	0.54	0.64	94.7	6.08	0.41	0.55	0.65	88.7	6.7	0.41	0.53	0.65

15 TON STANDARD EFFICIENCY KGB180S4M (FULL LOAD) - MSAV® MULTI-STAGE AIR VOLUME SUPPLY AIR BLOWER

Entering Wet Bulb Temperature	Total Air Volume	Outdoor Air Temperature Entering Outdoor Coil																			
		85°F					95°F					105°F					115°F				
		Total Cool Cap.	Comp. Motor Input	Sensible To Total Ratio (S/T) Dry Bulb			Total Cool Cap.	Comp. Motor Input	Sensible To Total Ratio (S/T) Dry Bulb			Total Cool Cap.	Comp. Motor Input	Sensible To Total Ratio (S/T) Dry Bulb			Total Cool Cap.	Comp. Motor Input	Sensible To Total Ratio (S/T) Dry Bulb		
	cfm	kBtuh	kW	75°F	80°F	85°F	kBtuh	kW	75°F	80°F	85°F	kBtuh	kW	75°F	80°F	85°F	kBtuh	kW	75°F	80°F	85°F
63°F	4800	170.7	11.45	0.68	0.83	0.99	162.4	12.84	0.7	0.86	1	153.5	14.39	0.71	0.89	1	144.4	16.18	0.73	0.93	1
	6000	178.7	11.54	0.73	0.92	1	169.7	12.93	0.75	0.95	1	160.4	14.48	0.78	0.98	1	151.2	16.28	0.81	1	1
	7200	184.7	11.61	0.79	0.99	1	175.6	13	0.81	1	1	166.8	14.57	0.85	1	1	158.2	16.39	0.88	1	1
67°F	4800	180.4	11.56	0.54	0.66	0.79	171.4	12.95	0.55	0.67	0.82	162.3	14.51	0.56	0.69	0.85	152.8	16.29	0.57	0.71	0.88
	6000	188.6	11.66	0.56	0.71	0.88	179	13.05	0.58	0.72	0.91	169.1	14.6	0.59	0.75	0.95	159	16.4	0.6	0.78	0.98
	7200	194.5	11.73	0.59	0.76	0.96	184.2	13.11	0.61	0.79	0.99	173.7	14.67	0.62	0.82	1	163.2	16.46	0.64	0.86	1
71°F	4800	189.5	11.68	0.41	0.53	0.64	180.4	13.06	0.41	0.53	0.65	170.9	14.63	0.41	0.54	0.67	161.2	16.43	0.41	0.55	0.69
	6000	198.3	11.78	0.41	0.55	0.68	188.4	13.17	0.42	0.56	0.7	178	14.74	0.43	0.58	0.72	167.7	16.53	0.43	0.59	0.75
	7200	204.4	11.86	0.43	0.58	0.73	193.8	13.24	0.43	0.6	0.76	183.1	14.81	0.44	0.61	0.79	172	16.6	0.45	0.63	0.83

NOTE - For Temperatures and Capacities not shown in tables, see bulletin - Cooling Unit Rating Table Correction Factor Data in Miscellaneous Engineering Data section.

17.5 TON STANDARD EFFICIENCY KGB210S4B (PART LOAD) - CONSTANT AIR VOLUME

Entering Wet Bulb Temperature	Total Air Volume	Outdoor Air Temperature Entering Outdoor Coil																			
		65°F					75°F					85°F					95°F				
		Total Cool Cap.	Comp. Motor Input	Sensible To Total Ratio (S/T) Dry Bulb			Total Cool Cap.	Comp. Motor Input	Sensible To Total Ratio (S/T) Dry Bulb			Total Cool Cap.	Comp. Motor Input	Sensible To Total Ratio (S/T) Dry Bulb			Total Cool Cap.	Comp. Motor Input	Sensible To Total Ratio (S/T) Dry Bulb		
	cfm	kBtuh	kW	75°F	80°F	85°F	kBtuh	kW	75°F	80°F	85°F	kBtuh	kW	75°F	80°F	85°F	kBtuh	kW	75°F	80°F	85°F
63°F	5600	160.7	6.69	0.64	0.77	0.92	150.3	7.53	0.64	0.79	0.94	139.6	8.47	0.64	0.8	0.97	128.1	9.52	0.65	0.82	0.99
	7000	170.4	6.76	0.68	0.85	0.99	159.5	7.61	0.69	0.87	1	147.9	8.54	0.7	0.9	1	136.3	9.61	0.72	0.93	1
	8400	178	6.82	0.74	0.93	1	166.8	7.67	0.75	0.95	1	154.9	8.61	0.77	0.98	1	142.9	9.68	0.79	0.99	1
67°F	5600	172.6	6.77	0.51	0.62	0.74	161.8	7.63	0.5	0.62	0.75	150.6	8.57	0.5	0.62	0.76	138.9	9.64	0.49	0.63	0.78
	7000	182.7	6.86	0.53	0.66	0.81	171.3	7.71	0.54	0.67	0.83	159.1	8.65	0.53	0.68	0.86	146.6	9.72	0.53	0.69	0.89
	8400	189.7	6.92	0.56	0.71	0.89	177.9	7.78	0.57	0.73	0.92	165	8.72	0.57	0.74	0.95	151.9	9.78	0.57	0.77	0.98
71°F	5600	184.7	6.87	0.39	0.5	0.6	173.4	7.74	0.38	0.49	0.6	161.6	8.68	0.37	0.49	0.61	149.3	9.75	0.35	0.49	0.61
	7000	194.7	6.96	0.4	0.52	0.64	182.9	7.83	0.39	0.53	0.65	170.1	8.78	0.39	0.53	0.66	157.2	9.85	0.38	0.53	0.68
	8400	202.1	7.04	0.42	0.55	0.69	189.8	7.91	0.41	0.56	0.7	176.6	8.85	0.4	0.56	0.72	162.6	9.92	0.4	0.56	0.74

17.5 TON STANDARD EFFICIENCY KGB210S4B (FULL LOAD) - CONSTANT AIR VOLUME

Entering Wet Bulb Temperature	Total Air Volume	Outdoor Air Temperature Entering Outdoor Coil																			
		85°F					95°F					105°F					115°F				
		Total Cool Cap.	Comp. Motor Input	Sensible To Total Ratio (S/T) Dry Bulb			Total Cool Cap.	Comp. Motor Input	Sensible To Total Ratio (S/T) Dry Bulb			Total Cool Cap.	Comp. Motor Input	Sensible To Total Ratio (S/T) Dry Bulb			Total Cool Cap.	Comp. Motor Input	Sensible To Total Ratio (S/T) Dry Bulb		
	cfm	kBtuh	kW	75°F	80°F	85°F	kBtuh	kW	75°F	80°F	85°F	kBtuh	kW	75°F	80°F	85°F	kBtuh	kW	75°F	80°F	85°F
63°F	5600	205.4	13.32	0.66	0.82	0.98	188.3	14.98	0.66	0.85	0.99	170.7	16.91	0.68	0.88	1	152.7	19.17	0.69	0.92	1
	7000	217.4	13.46	0.71	0.92	1	199.6	15.13	0.73	0.95	1	181.9	17.06	0.75	0.98	1	164.3	19.34	0.78	0.99	1
	8400	227.5	13.59	0.78	0.99	1	209.9	15.28	0.81	1	1	192.6	17.21	0.84	1	1	174.7	19.49	0.88	1	1
67°F	5600	221.3	13.51	0.51	0.64	0.78	203.6	15.18	0.5	0.65	0.81	185	17.09	0.5	0.66	0.84	166.2	19.36	0.5	0.67	0.88
	7000	233.1	13.66	0.54	0.7	0.89	214.2	15.33	0.54	0.71	0.92	194.8	17.25	0.54	0.73	0.95	174.7	19.48	0.55	0.76	0.98
	8400	241.4	13.77	0.58	0.76	0.97	221.7	15.43	0.58	0.79	0.99	201.3	17.34	0.59	0.82	1	180.8	19.59	0.6	0.86	1
71°F	5600	237.2	13.72	0.37	0.5	0.62	218.4	15.39	0.36	0.5	0.63	199.4	17.31	0.35	0.5	0.64	180	19.57	0.33	0.49	0.65
	7000	249	13.88	0.39	0.54	0.68	229.5	15.55	0.38	0.54	0.69	209.2	17.45	0.37	0.54	0.71	188.5	19.7	0.35	0.55	0.74
	8400	257.7	13.99	0.41	0.58	0.74	236.9	15.66	0.4	0.58	0.77	215.7	17.57	0.39	0.59	0.8	194.6	19.8	0.38	0.6	0.84

17.5 TON STANDARD EFFICIENCY KGB210S4M (PART LOAD) - MSAV® MULTI-STAGE AIR VOLUME SUPPLY AIR BLOWER

Entering Wet Bulb Temperature	Total Air Volume	Outdoor Air Temperature Entering Outdoor Coil																			
		65°F					75°F					85°F					95°F				
		Total Cool Cap.	Comp. Motor Input	Sensible To Total Ratio (S/T) Dry Bulb			Total Cool Cap.	Comp. Motor Input	Sensible To Total Ratio (S/T) Dry Bulb			Total Cool Cap.	Comp. Motor Input	Sensible To Total Ratio (S/T) Dry Bulb			Total Cool Cap.	Comp. Motor Input	Sensible To Total Ratio (S/T) Dry Bulb		
	cfm	kBtuh	kW	75°F	80°F	85°F	kBtuh	kW	75°F	80°F	85°F	kBtuh	kW	75°F	80°F	85°F	kBtuh	kW	75°F	80°F	85°F
63°F	4000	134.7	6.84	0.67	0.77	0.85	127.7	7.65	0.67	0.77	0.86	120.2	8.52	0.67	0.77	0.87	112.2	9.54	0.67	0.78	0.89
	4750	143.1	6.89	0.69	0.79	0.89	135.6	7.70	0.69	0.80	0.90	127.4	8.58	0.69	0.81	0.91	118.9	9.60	0.69	0.82	0.93
	5500	149.6	6.92	0.71	0.82	0.93	141.8	7.73	0.71	0.83	0.94	133.2	8.63	0.72	0.84	0.95	124.3	9.65	0.72	0.85	0.97
67°F	4000	143.8	6.88	0.54	0.64	0.73	136.6	7.69	0.54	0.64	0.74	128.9	8.59	0.53	0.64	0.74	120.3	9.60	0.53	0.64	0.75
	4750	152.4	6.93	0.56	0.67	0.76	144.8	7.76	0.55	0.67	0.77	136.1	8.65	0.55	0.67	0.78	127.1	9.68	0.54	0.67	0.79
	5500	159.3	6.98	0.57	0.69	0.79	150.9	7.81	0.57	0.69	0.80	141.9	8.71	0.57	0.69	0.81	132.4	9.74	0.56	0.70	0.82
71°F	4000	153.7	6.94	0.43	0.52	0.62	146.0	7.75	0.42	0.52	0.62	137.6	8.66	0.4	0.51	0.62	128.6	9.69	0.39	0.51	0.62
	4750	162.1	6.99	0.44	0.54	0.64	153.8	7.82	0.43	0.54	0.64	144.8	8.74	0.41	0.53	0.64	135.3	9.77	0.41	0.53	0.65
	5500	168.9	7.05	0.44	0.56	0.66	159.9	7.88	0.43	0.56	0.67	150.7	8.80	0.43	0.55	0.67	140.3	9.83	0.42	0.55	0.68

17.5 TON STANDARD EFFICIENCY KGB210S4M (FULL LOAD) - MSAV® MULTI-STAGE AIR VOLUME SUPPLY AIR BLOWER

Entering Wet Bulb Temperature	Total Air Volume	Outdoor Air Temperature Entering Outdoor Coil																			
		85°F					95°F					105°F					115°F				
		Total Cool Cap.	Comp. Motor Input	Sensible To Total Ratio (S/T) Dry Bulb			Total Cool Cap.	Comp. Motor Input	Sensible To Total Ratio (S/T) Dry Bulb			Total Cool Cap.	Comp. Motor Input	Sensible To Total Ratio (S/T) Dry Bulb			Total Cool Cap.	Comp. Motor Input	Sensible To Total Ratio (S/T) Dry Bulb		
	cfm	kBtuh	kW	75°F	80°F	85°F	kBtuh	kW	75°F	80°F	85°F	kBtuh	kW	75°F	80°F	85°F	kBtuh	kW	75°F	80°F	85°F
63°F	5600	205.4	13.32	0.66	0.82	0.98	188.3	14.98	0.66	0.85	0.99	170.7	16.91	0.68	0.88	1	152.7	19.17	0.69	0.92	1
	7000	217.4	13.46	0.71	0.92	1	199.6	15.13	0.73	0.95	1	181.9	17.06	0.75	0.98	1	164.3	19.34	0.78	0.99	1
	8400	227.5	13.59	0.78	0.99	1	209.9	15.28	0.81	1	1	192.6	17.21	0.84	1	1	174.7	19.49	0.88	1	1
67°F	5600	221.3	13.51	0.51	0.64	0.78	203.6	15.18	0.5	0.65	0.81	185	17.09	0.5	0.66	0.84	166.2	19.36	0.5	0.67	0.88
	7000	233.1	13.66	0.54	0.7	0.89	214.2	15.33	0.54	0.71	0.92	194.8	17.25	0.54	0.73	0.95	174.7	19.48	0.55	0.76	0.98
	8400	241.4	13.77	0.58	0.76	0.97	221.7	15.43	0.58	0.79	0.99	201.3	17.34	0.59	0.82	1	180.8	19.59	0.6	0.86	1
71°F	5600	237.2	13.72	0.37	0.5	0.62	218.4	15.39	0.36	0.5	0.63	199.4	17.31	0.35	0.5	0.64	180	19.57	0.33	0.49	0.65
	7000	249	13.88	0.39	0.54	0.68	229.5	15.55	0.38	0.54	0.69	209.2	17.45	0.37	0.54	0.71	188.5	19.7	0.35	0.55	0.74
	8400	257.7	13.99	0.41	0.58	0.74	236.9	15.66	0.4	0.58	0.77	215.7	17.57	0.39	0.59	0.8	194.6	19.8	0.38	0.6	0.84

NOTE - For Temperatures and Capacities not shown in tables, see bulletin - Cooling Unit Rating Table Correction Factor Data in Miscellaneous Engineering Data section.

20 TON STANDARD EFFICIENCY KGB240S4B (PART LOAD) - CONSTANT AIR VOLUME

Entering Wet Bulb Temperature	Total Air Volume	Outdoor Air Temperature Entering Outdoor Coil																			
		65°F					75°F					85°F					95°F				
		Total Cool Cap.	Comp. Motor Input	Sensible To Total Ratio (S/T) Dry Bulb			Total Cool Cap.	Comp. Motor Input	Sensible To Total Ratio (S/T) Dry Bulb			Total Cool Cap.	Comp. Motor Input	Sensible To Total Ratio (S/T) Dry Bulb			Total Cool Cap.	Comp. Motor Input	Sensible To Total Ratio (S/T) Dry Bulb		
	cfm	kBtuh	kW	75°F	80°F	85°F	kBtuh	kW	75°F	80°F	85°F	kBtuh	kW	75°F	80°F	85°F	kBtuh	kW	75°F	80°F	85°F
63°F	6400	171.1	7.51	0.7	0.83	0.95	162.6	8.34	0.71	0.84	0.97	153.5	9.27	0.72	0.86	0.98	143.7	10.29	0.73	0.88	1
	8000	180.1	7.55	0.75	0.89	1	171	8.39	0.76	0.91	1	161.5	9.31	0.77	0.93	1	151.6	10.34	0.79	0.96	1
	9600	187.2	7.57	0.79	0.95	1	178	8.42	0.81	0.97	1	168	9.35	0.83	0.99	1	157.1	10.38	0.85	1	1
67°F	6400	182.3	7.55	0.56	0.68	0.79	173.6	8.39	0.56	0.69	0.81	163.7	9.33	0.56	0.7	0.82	153.5	10.36	0.56	0.7	0.84
	8000	191.4	7.59	0.58	0.72	0.86	181.9	8.44	0.59	0.73	0.88	171.7	9.37	0.6	0.75	0.9	160.3	10.4	0.61	0.76	0.92
	9600	198.2	7.62	0.62	0.78	0.92	187.9	8.47	0.63	0.78	0.94	177.3	9.41	0.63	0.8	0.97	165.9	10.44	0.64	0.83	0.99
71°F	6400	193.6	7.6	0.43	0.55	0.66	184.4	8.45	0.43	0.55	0.66	174	9.39	0.42	0.55	0.67	163.1	10.42	0.42	0.55	0.69
	8000	202.8	7.63	0.44	0.57	0.71	192.8	8.5	0.43	0.58	0.71	182.2	9.44	0.43	0.59	0.73	171	10.47	0.43	0.6	0.75
	9600	210	7.67	0.45	0.61	0.75	199.2	8.54	0.45	0.62	0.77	188	9.48	0.45	0.62	0.78	175.9	10.52	0.45	0.63	0.81

20 TON STANDARD EFFICIENCY KGB240S4B (FULL LOAD) - CONSTANT AIR VOLUME

Entering Wet Bulb Temperature	Total Air Volume	Outdoor Air Temperature Entering Outdoor Coil																			
		85°F					95°F					105°F					115°F				
		Total Cool Cap.	Comp. Motor Input	Sensible To Total Ratio (S/T) Dry Bulb			Total Cool Cap.	Comp. Motor Input	Sensible To Total Ratio (S/T) Dry Bulb			Total Cool Cap.	Comp. Motor Input	Sensible To Total Ratio (S/T) Dry Bulb			Total Cool Cap.	Comp. Motor Input	Sensible To Total Ratio (S/T) Dry Bulb		
	cfm	kBtuh	kW	75°F	80°F	85°F	kBtuh	kW	75°F	80°F	85°F	kBtuh	kW	75°F	80°F	85°F	kBtuh	kW	75°F	80°F	85°F
63°F	6400	237.6	15.43	0.73	0.88	0.99	221.7	17.11	0.74	0.9	1	205.4	19.02	0.76	0.93	1	189.5	21.25	0.77	0.95	1
	8000	249.7	15.56	0.79	0.95	1	233.1	17.24	0.81	0.97	1	216.7	19.16	0.83	0.99	1	201.2	21.39	0.85	0.99	1
	9600	259.9	15.66	0.85	0.99	1	243.8	17.36	0.87	1	1	227	19.28	0.89	1	1	211.1	21.5	0.92	1	1
67°F	6400	253.3	15.6	0.57	0.71	0.85	236.4	17.28	0.57	0.72	0.87	219.2	19.2	0.58	0.74	0.89	202.3	21.41	0.58	0.75	0.92
	8000	264.7	15.73	0.61	0.77	0.93	246.7	17.41	0.61	0.79	0.95	228.9	19.33	0.62	0.81	0.97	210.9	21.52	0.63	0.83	0.98
	9600	273.1	15.82	0.64	0.83	0.98	254.7	17.51	0.65	0.85	0.99	235.5	19.41	0.66	0.87	1	217.6	21.61	0.67	0.9	1
71°F	6400	268.7	15.76	0.42	0.55	0.69	251.5	17.46	0.42	0.56	0.7	233.7	19.37	0.41	0.57	0.72	216.1	21.58	0.4	0.57	0.73
	8000	281	15.91	0.44	0.6	0.75	262.3	17.6	0.43	0.61	0.77	243.3	19.5	0.43	0.61	0.79	224.4	21.7	0.43	0.62	0.81
	9600	289.2	16.01	0.46	0.64	0.81	269.3	17.7	0.45	0.64	0.83	250	19.6	0.45	0.66	0.86	231.1	21.79	0.45	0.68	0.88

20 TON STANDARD EFFICIENCY KGB240S4M (PART LOAD) - MSAV® MULTI-STAGE AIR VOLUME SUPPLY AIR BLOWER

Entering Wet Bulb Temperature	Total Air Volume	Outdoor Air Temperature Entering Outdoor Coil																			
		65°F					75°F					85°F					95°F				
		Total Cool Cap.	Comp. Motor Input	Sensible To Total Ratio (S/T) Dry Bulb			Total Cool Cap.	Comp. Motor Input	Sensible To Total Ratio (S/T) Dry Bulb			Total Cool Cap.	Comp. Motor Input	Sensible To Total Ratio (S/T) Dry Bulb			Total Cool Cap.	Comp. Motor Input	Sensible To Total Ratio (S/T) Dry Bulb		
	cfm	kBtuh	kW	75°F	80°F	85°F	kBtuh	kW	75°F	80°F	85°F	kBtuh	kW	75°F	80°F	85°F	kBtuh	kW	75°F	80°F	85°F
63°F	4500	150.3	7.71	0.64	0.75	0.84	142.4	8.51	0.64	0.75	0.85	133.8	9.39	0.64	0.75	0.87	125.0	10.40	0.64	0.76	0.88
	5500	161.0	7.74	0.67	0.79	0.90	152.4	8.54	0.67	0.79	0.91	143.0	9.43	0.67	0.80	0.92	133.3	10.44	0.68	0.81	0.94
	6500	169.0	7.75	0.70	0.82	0.94	159.8	8.56	0.71	0.84	0.96	149.9	9.46	0.70	0.85	0.98	139.7	10.48	0.71	0.86	0.99
67°F	4500	161.1	7.73	0.53	0.62	0.71	152.8	8.54	0.52	0.62	0.72	144.0	9.43	0.51	0.62	0.72	134.5	10.44	0.50	0.62	0.73
	5500	171.9	7.76	0.54	0.65	0.75	162.8	8.58	0.54	0.65	0.76	153.3	9.49	0.53	0.65	0.77	142.9	10.49	0.53	0.66	0.78
	6500	179.8	7.79	0.56	0.67	0.79	170.4	8.62	0.55	0.68	0.80	160.2	9.52	0.55	0.68	0.81	149.4	10.54	0.55	0.69	0.83
71°F	4500	172.7	7.76	0.42	0.51	0.60	164.0	8.58	0.40	0.50	0.60	154.3	9.48	0.39	0.50	0.59	144.2	10.51	0.38	0.49	0.59
	5500	183.1	7.80	0.42	0.53	0.63	173.4	8.63	0.41	0.52	0.63	163.2	9.53	0.41	0.52	0.63	152.3	10.55	0.39	0.51	0.63
	6500	191.0	7.83	0.43	0.54	0.65	180.4	8.66	0.42	0.54	0.66	169.9	9.57	0.41	0.54	0.67	158.6	10.60	0.41	0.54	0.67

20 TON STANDARD EFFICIENCY KGB240S4M (FULL LOAD) - MSAV® MULTI-STAGE AIR VOLUME SUPPLY AIR BLOWER

Entering Wet Bulb Temperature	Total Air Volume	Outdoor Air Temperature Entering Outdoor Coil																			
		85°F					95°F					105°F					115°F				
		Total Cool Cap.	Comp. Motor Input	Sensible To Total Ratio (S/T) Dry Bulb			Total Cool Cap.	Comp. Motor Input	Sensible To Total Ratio (S/T) Dry Bulb			Total Cool Cap.	Comp. Motor Input	Sensible To Total Ratio (S/T) Dry Bulb			Total Cool Cap.	Comp. Motor Input	Sensible To Total Ratio (S/T) Dry Bulb		
	cfm	kBtuh	kW	75°F	80°F	85°F	kBtuh	kW	75°F	80°F	85°F	kBtuh	kW	75°F	80°F	85°F	kBtuh	kW	75°F	80°F	85°F
63°F	6400	237.6	15.43	0.73	0.88	0.99	221.7	17.11	0.74	0.9	1	205.4	19.02	0.76	0.93	1	189.5	21.25	0.77	0.95	1
	8000	249.7	15.56	0.79	0.95	1	233.1	17.24	0.81	0.97	1	216.7	19.16	0.83	0.99	1	201.2	21.39	0.85	0.99	1
	9600	259.9	15.66	0.85	0.99	1	243.8	17.36	0.87	1	1	227	19.28	0.89	1	1	211.1	21.5	0.92	1	1
67°F	6400	253.3	15.6	0.57	0.71	0.85	236.4	17.28	0.57	0.72	0.87	219.2	19.2	0.58	0.74	0.89	202.3	21.41	0.58	0.75	0.92
	8000	264.7	15.73	0.61	0.77	0.93	246.7	17.41	0.61	0.79	0.95	228.9	19.33	0.62	0.81	0.97	210.9	21.52	0.63	0.83	0.98
	9600	273.1	15.82	0.64	0.83	0.98	254.7	17.51	0.65	0.85	0.99	235.5	19.41	0.66	0.87	1	217.6	21.61	0.67	0.9	1
71°F	6400	268.7	15.76	0.42	0.55	0.69	251.5	17.46	0.42	0.56	0.7	233.7	19.37	0.41	0.57	0.72	216.1	21.58	0.4	0.57	0.73
	8000	281	15.91	0.44	0.6	0.75	262.3	17.6	0.43	0.61	0.77	243.3	19.5	0.43	0.61	0.79	224.4	21.7	0.43	0.62	0.81
	9600	289.2	16.01	0.46	0.64	0.81	269.3	17.7	0.45	0.64	0.83	250	19.6	0.45	0.66	0.86	231.1	21.79	0.45	0.68	0.88

NOTE - For Temperatures and Capacities not shown in tables, see bulletin - Cooling Unit Rating Table Correction Factor Data in Miscellaneous Engineering Data section.

25 TON STANDARD EFFICIENCY KGB300S4B (PART LOAD) - CONSTANT AIR VOLUME

Entering Wet Bulb Temperature	Total Air Volume	Outdoor Air Temperature Entering Outdoor Coil																			
		65°F					75°F					85°F					95°F				
		Total Cool Cap.	Comp. Motor Input	Sensible To Total Ratio (S/T) Dry Bulb			Total Cool Cap.	Comp. Motor Input	Sensible To Total Ratio (S/T) Dry Bulb			Total Cool Cap.	Comp. Motor Input	Sensible To Total Ratio (S/T) Dry Bulb			Total Cool Cap.	Comp. Motor Input	Sensible To Total Ratio (S/T) Dry Bulb		
	cfm	kBtuh	kW	75°F	80°F	85°F	kBtuh	kW	75°F	80°F	85°F	kBtuh	kW	75°F	80°F	85°F	kBtuh	kW	75°F	80°F	85°F
63°F	8000	147.3	6.36	0.70	0.82	0.95	140.6	7.18	0.71	0.84	0.97	134.8	8.10	0.72	0.86	0.99	129.1	9.16	0.73	0.88	1.00
	9500	152.7	6.41	0.73	0.87	0.99	145.9	7.24	0.74	0.90	1.00	140.0	8.16	0.75	0.92	1.00	133.8	9.22	0.77	0.94	1.00
	11000	157.6	6.47	0.75	0.92	1.00	150.5	7.29	0.78	0.95	1.00	144.1	8.22	0.80	0.97	1.00	137.6	9.27	0.82	0.98	1.00
67°F	8000	156.1	6.45	0.55	0.67	0.79	149.2	7.27	0.56	0.68	0.81	142.8	8.20	0.57	0.70	0.83	136.3	9.25	0.57	0.70	0.84
	9500	161.6	6.51	0.57	0.70	0.84	154.0	7.33	0.58	0.71	0.86	147.3	8.26	0.59	0.73	0.88	140.8	9.31	0.60	0.75	0.91
	11000	165.6	6.55	0.59	0.73	0.89	158.2	7.38	0.60	0.76	0.92	151.1	8.31	0.61	0.77	0.94	144.2	9.37	0.63	0.79	0.96
71°F	8000	165.2	6.55	0.42	0.54	0.65	157.7	7.38	0.42	0.54	0.66	151.1	8.31	0.42	0.55	0.67	144.2	9.37	0.43	0.56	0.69
	9500	170.7	6.61	0.43	0.56	0.68	162.8	7.44	0.43	0.57	0.70	155.4	8.37	0.44	0.57	0.71	148.2	9.42	0.44	0.58	0.72
	11,000	174.8	6.66	0.44	0.58	0.71	166.6	7.49	0.45	0.59	0.73	159.1	8.42	0.44	0.60	0.75	151.8	9.47	0.45	0.61	0.77

25 TON STANDARD EFFICIENCY KGB300S4B (FULL LOAD) - CONSTANT AIR VOLUME

Entering Wet Bulb Temperature	Total Air Volume	Outdoor Air Temperature Entering Outdoor Coil																			
		85°F					95°F					105°F					115°F				
		Total Cool Cap.	Comp. Motor Input	Sensible To Total Ratio (S/T) Dry Bulb			Total Cool Cap.	Comp. Motor Input	Sensible To Total Ratio (S/T) Dry Bulb			Total Cool Cap.	Comp. Motor Input	Sensible To Total Ratio (S/T) Dry Bulb			Total Cool Cap.	Comp. Motor Input	Sensible To Total Ratio (S/T) Dry Bulb		
	cfm	kBtuh	kW	75°F	80°F	85°F	kBtuh	kW	75°F	80°F	85°F	kBtuh	kW	75°F	80°F	85°F	kBtuh	kW	75°F	80°F	85°F
63°F	8000	277.2	17.80	0.72	0.87	1.00	264.6	19.95	0.74	0.89	1.00	251.7	22.43	0.75	0.92	1.00	238.5	25.35	0.78	0.95	1.00
	9500	287.2	17.97	0.76	0.93	1.00	273.8	20.12	0.78	0.96	1.00	260.1	22.59	0.80	0.98	1.00	246.0	25.49	0.83	1.00	1.00
	11000	295.0	18.11	0.80	0.98	1.00	280.6	20.25	0.83	1.00	1.00	267.4	22.73	0.85	1.00	1.00	254.5	25.68	0.88	1.00	1.00
67°F	8000	293.2	18.08	0.57	0.70	0.83	279.6	20.23	0.58	0.71	0.86	265.8	22.71	0.59	0.73	0.88	251.7	25.63	0.60	0.75	0.91
	9500	302.9	18.25	0.59	0.74	0.89	288.4	20.39	0.60	0.76	0.92	273.9	22.86	0.62	0.78	0.95	258.8	25.78	0.63	0.80	0.98
	11000	310.1	18.38	0.62	0.78	0.95	295.3	20.52	0.63	0.80	0.98	279.9	22.99	0.64	0.83	1.00	264.5	25.89	0.65	0.85	1.00
71°F	8000	310.0	18.38	0.43	0.56	0.68	295.5	20.53	0.43	0.57	0.69	280.6	23.00	0.43	0.58	0.71	265.8	25.92	0.44	0.59	0.73
	9500	319.0	18.54	0.44	0.58	0.72	304.0	20.68	0.44	0.59	0.74	288.9	23.17	0.45	0.61	0.75	273.0	26.07	0.45	0.62	0.78
	11,000	326.9	18.68	0.44	0.61	0.76	311.2	20.82	0.45	0.62	0.78	294.9	23.29	0.46	0.63	0.80	278.5	26.19	0.47	0.65	0.83

25 TON STANDARD EFFICIENCY KGB300S4M (PART LOAD) - MSAV® MULTI-STAGE AIR VOLUME SUPPLY AIR BLOWER

Entering Wet Bulb Temperature	Total Air Volume	Outdoor Air Temperature Entering Outdoor Coil																			
		65°F					75°F					85°F					95°F				
		Total Cool Cap.	Comp. Motor Input	Sensible To Total Ratio (S/T) Dry Bulb			Total Cool Cap.	Comp. Motor Input	Sensible To Total Ratio (S/T) Dry Bulb			Total Cool Cap.	Comp. Motor Input	Sensible To Total Ratio (S/T) Dry Bulb			Total Cool Cap.	Comp. Motor Input	Sensible To Total Ratio (S/T) Dry Bulb		
	cfm	kBtuh	kW	75°F	80°F	85°F	kBtuh	kW	75°F	80°F	85°F	kBtuh	kW	75°F	80°F	85°F	kBtuh	kW	75°F	80°F	85°F
63°F	5750	135.3	6.25	0.65	0.75	0.86	130.0	7.06	0.66	0.77	0.88	124.8	7.98	0.66	0.78	0.89	119.7	9.04	0.67	0.79	0.91
	6750	141.3	6.30	0.67	0.79	0.90	135.5	7.12	0.68	0.80	0.92	129.8	8.04	0.69	0.82	0.94	124.3	9.10	0.70	0.83	0.96
	7750	146.0	6.35	0.69	0.82	0.94	139.8	7.17	0.70	0.84	0.96	133.9	8.09	0.72	0.86	0.98	128.1	9.14	0.73	0.87	0.99
67°F	5750	143.5	6.32	0.53	0.62	0.72	138.1	7.15	0.53	0.63	0.73	132.4	8.07	0.54	0.64	0.74	126.9	9.13	0.54	0.65	0.76
	6750	149.9	6.39	0.54	0.64	0.75	143.6	7.21	0.54	0.65	0.77	137.7	8.14	0.55	0.67	0.78	131.9	9.19	0.56	0.67	0.80
	7750	155.1	6.44	0.55	0.67	0.79	148.1	7.26	0.56	0.68	0.81	141.9	8.19	0.57	0.69	0.82	135.7	9.25	0.57	0.71	0.84
71°F	5750	151.7	6.41	0.42	0.51	0.60	145.6	7.24	0.42	0.51	0.61	140.1	8.17	0.42	0.52	0.61	134.2	9.23	0.42	0.52	0.62
	6750	158.3	6.48	0.42	0.52	0.62	151.7	7.31	0.42	0.53	0.63	145.6	8.24	0.42	0.53	0.64	139.7	9.30	0.42	0.54	0.65
	7750	164.2	6.54	0.42	0.54	0.64	156.7	7.37	0.41	0.54	0.65	150.2	8.30	0.42	0.55	0.67	143.3	9.35	0.43	0.56	0.68

25 TON STANDARD EFFICIENCY KGB300S4M (FULL LOAD) - MSAV® MULTI-STAGE AIR VOLUME SUPPLY AIR BLOWER

Entering Wet Bulb Temperature	Total Air Volume	Outdoor Air Temperature Entering Outdoor Coil																			
		85°F					95°F					105°F					115°F				
		Total Cool Cap.	Comp. Motor Input	Sensible To Total Ratio (S/T) Dry Bulb			Total Cool Cap.	Comp. Motor Input	Sensible To Total Ratio (S/T) Dry Bulb			Total Cool Cap.	Comp. Motor Input	Sensible To Total Ratio (S/T) Dry Bulb			Total Cool Cap.	Comp. Motor Input	Sensible To Total Ratio (S/T) Dry Bulb		
	cfm	kBtuh	kW	75°F	80°F	85°F	kBtuh	kW	75°F	80°F	85°F	kBtuh	kW	75°F	80°F	85°F	kBtuh	kW	75°F	80°F	85°F
63°F	8000	277.2	17.80	0.72	0.87	1.00	264.6	19.95	0.74	0.89	1.00	251.7	22.43	0.75	0.92	1.00	238.5	25.35	0.78	0.95	1.00
	9500	287.2	17.97	0.76	0.93	1.00	273.8	20.12	0.78	0.96	1.00	260.1	22.59	0.80	0.98	1.00	246.0	25.49	0.83	1.00	1.00
	11000	295.0	18.11	0.80	0.98	1.00	280.6	20.25	0.83	1.00	1.00	267.4	22.73	0.85	1.00	1.00	254.5	25.68	0.88	1.00	1.00
67°F	8000	293.2	18.08	0.57	0.70	0.83	279.6	20.23	0.58	0.71	0.86	265.8	22.71	0.59	0.73	0.88	251.7	25.63	0.60	0.75	0.91
	9500	302.9	18.25	0.59	0.74	0.89	288.4	20.39	0.60	0.76	0.92	273.9	22.86	0.62	0.78	0.95	258.8	25.78	0.63	0.80	0.98
	11000	310.1	18.38	0.62	0.78	0.95	295.3	20.52	0.63	0.80	0.98	279.9	22.99	0.64	0.83	1.00	264.5	25.89	0.65	0.85	1.00
71°F	8000	310.0	18.38	0.43	0.56	0.68	295.5	20.53	0.43	0.57	0.69	280.6	23.00	0.43	0.58	0.71	265.8	25.92	0.44	0.59	0.73
	9500	319.0	18.54	0.44	0.58	0.72	304.0	20.68	0.44	0.59	0.74	288.9	23.17	0.45	0.61	0.75	273.0	26.07	0.45	0.62	0.78
	11,000	326.9	18.68	0.44	0.61	0.76	311.2	20.82	0.45	0.62	0.78	294.9	23.29	0.46	0.63	0.80	278.5	26.19	0.47	0.65	0.83

NOTE - For Temperatures and Capacities not shown in tables, see bulletin - Cooling Unit Rating Table Correction Factor Data in Miscellaneous Engineering Data section.

13 TON HIGH EFFICIENCY KGA156H4B (PART LOAD) - CONSTANT AIR VOLUME

Entering Wet Bulb Temperature	Total Air Volume	Outdoor Air Temperature Entering Outdoor Coil																			
		65°F					75°F					85°F					95°F				
		Total Cool Cap.	Comp. Motor Input	Sensible To Total Ratio (S/T) Dry Bulb			Total Cool Cap.	Comp. Motor Input	Sensible To Total Ratio (S/T) Dry Bulb			Total Cool Cap.	Comp. Motor Input	Sensible To Total Ratio (S/T) Dry Bulb			Total Cool Cap.	Comp. Motor Input	Sensible To Total Ratio (S/T) Dry Bulb		
	cfm	kBtuh	kW	75°F	80°F	85°F	kBtuh	kW	75°F	80°F	85°F	kBtuh	kW	75°F	80°F	85°F	kBtuh	kW	75°F	80°F	85°F
63°F	4160	110.6	4.68	0.67	0.80	0.93	103.7	5.30	0.68	0.81	0.95	96.4	5.97	0.68	0.82	0.97	88.8	6.74	0.68	0.84	0.99
	5200	117.9	4.73	0.72	0.87	0.99	110.4	5.34	0.72	0.88	1.00	102.7	6.01	0.73	0.90	1.00	94.7	6.78	0.74	0.93	1.00
	6240	123.1	4.77	0.76	0.93	1.00	115.4	5.38	0.77	0.95	1.00	107.5	6.05	0.79	0.97	1.00	99.3	6.81	0.80	0.99	1.00
67°F	4160	118.4	4.73	0.54	0.65	0.77	111.2	5.34	0.53	0.65	0.78	103.8	6.02	0.52	0.66	0.79	96.0	6.79	0.52	0.66	0.80
	5200	126.0	4.79	0.57	0.70	0.83	118.4	5.39	0.56	0.70	0.85	110.5	6.07	0.56	0.71	0.86	102.2	6.83	0.56	0.72	0.89
	6240	131.7	4.83	0.59	0.74	0.90	123.6	5.43	0.59	0.75	0.91	115.4	6.11	0.59	0.76	0.94	106.7	6.87	0.59	0.78	0.96
71°F	4160	126.1	4.78	0.42	0.53	0.63	118.8	5.39	0.40	0.52	0.63	111.2	6.07	0.39	0.52	0.63	103.1	6.84	0.37	0.51	0.64
	5200	134.1	4.84	0.43	0.55	0.67	126.1	5.45	0.41	0.55	0.68	118.0	6.13	0.4	0.55	0.69	109.6	6.89	0.39	0.55	0.70
	6240	140.0	4.88	0.44	0.58	0.72	131.7	5.49	0.42	0.58	0.73	123.3	6.17	0.42	0.59	0.74	114.3	6.93	0.40	0.59	0.76

13 TON HIGH EFFICIENCY KGA156H4B (FULL LOAD) - CONSTANT AIR VOLUME

Entering Wet Bulb Temperature	Total Air Volume	Outdoor Air Temperature Entering Outdoor Coil																			
		85°F					95°F					105°F					115°F				
		Total Cool Cap.	Comp. Motor Input	Sensible To Total Ratio (S/T) Dry Bulb			Total Cool Cap.	Comp. Motor Input	Sensible To Total Ratio (S/T) Dry Bulb			Total Cool Cap.	Comp. Motor Input	Sensible To Total Ratio (S/T) Dry Bulb			Total Cool Cap.	Comp. Motor Input	Sensible To Total Ratio (S/T) Dry Bulb		
	cfm	kBtuh	kW	75°F	80°F	85°F	kBtuh	kW	75°F	80°F	85°F	kBtuh	kW	75°F	80°F	85°F	kBtuh	kW	75°F	80°F	85°F
63°F	4160	148.1	9.05	0.70	0.85	0.99	136.5	10.20	0.71	0.87	1.00	124.5	11.51	0.72	0.9	1.00	112.1	13.01	0.73	0.93	1.00
	5200	157.1	9.11	0.76	0.94	1.00	145.1	10.26	0.77	0.96	1.00	132.6	11.57	0.79	0.99	1.00	120.5	13.08	0.81	1.00	1.00
	6240	164.5	9.17	0.82	0.99	1.00	152.7	10.32	0.83	1.00	1.00	141.1	11.64	0.86	1.00	1.00	129.1	13.15	0.89	1.00	1.00
67°F	4160	159.3	9.13	0.54	0.68	0.82	147.4	10.28	0.54	0.69	0.84	135.3	11.59	0.53	0.70	0.86	122.4	13.09	0.53	0.71	0.89
	5200	169.0	9.20	0.58	0.74	0.90	156.5	10.35	0.58	0.75	0.92	143.4	11.66	0.58	0.77	0.95	129.8	13.16	0.58	0.79	0.98
	6240	175.9	9.25	0.61	0.80	0.97	162.7	10.40	0.62	0.81	0.99	149.1	11.71	0.62	0.83	1.00	135.2	13.2	0.63	0.86	1.00
71°F	4160	170.4	9.21	0.40	0.53	0.66	158.1	10.36	0.38	0.53	0.66	145.8	11.68	0.37	0.53	0.67	132.6	13.18	0.35	0.52	0.69
	5200	180.5	9.29	0.41	0.57	0.72	167.6	10.44	0.41	0.57	0.73	154.2	11.75	0.39	0.57	0.74	140.5	13.25	0.37	0.58	0.76
	6240	187.9	9.35	0.43	0.61	0.77	174.4	10.50	0.42	0.61	0.79	160.4	11.81	0.41	0.61	0.81	146.2	13.31	0.40	0.62	0.84

13 TON HIGH EFFICIENCY KGA156H4M (PART LOAD) - MSAV® MULTI-STAGE AIR VOLUME SUPPLY AIR BLOWER

Entering Wet Bulb Temperature	Total Air Volume	Outdoor Air Temperature Entering Outdoor Coil																			
		65°F					75°F					85°F					95°F				
		Total Cool Cap.	Comp. Motor Input	Sensible To Total Ratio (S/T) Dry Bulb			Total Cool Cap.	Comp. Motor Input	Sensible To Total Ratio (S/T) Dry Bulb			Total Cool Cap.	Comp. Motor Input	Sensible To Total Ratio (S/T) Dry Bulb			Total Cool Cap.	Comp. Motor Input	Sensible To Total Ratio (S/T) Dry Bulb		
	cfm	kBtuh	kW	75°F	80°F	85°F	kBtuh	kW	75°F	80°F	85°F	kBtuh	kW	75°F	80°F	85°F	kBtuh	kW	75°F	80°F	85°F
63°F	3000	101.3	4.50	0.67	0.77	0.86	95.0	5.11	0.67	0.77	0.87	88.4	5.78	0.66	0.78	0.88	81.4	6.53	0.66	0.78	0.90
	3500	107.4	4.53	0.69	0.8	0.9	100.7	5.14	0.69	0.80	0.91	93.7	5.81	0.69	0.81	0.93	86.4	6.56	0.69	0.82	0.94
	4000	112.3	4.56	0.71	0.83	0.94	105.3	5.16	0.71	0.83	0.95	98.0	5.83	0.71	0.85	0.97	90.4	6.58	0.72	0.86	0.99
67°F	3000	108.8	4.54	0.54	0.65	0.74	102.3	5.15	0.53	0.64	0.74	95.5	5.81	0.52	0.64	0.74	88.3	6.57	0.51	0.64	0.75
	3500	115.1	4.57	0.56	0.67	0.77	108.2	5.18	0.55	0.67	0.77	101.0	5.84	0.54	0.67	0.78	93.5	6.59	0.53	0.67	0.79
	4000	120.3	4.60	0.57	0.69	0.80	113.1	5.21	0.57	0.69	0.80	105.5	5.87	0.56	0.69	0.81	97.7	6.62	0.55	0.70	0.83
71°F	3000	116.1	4.57	0.43	0.53	0.62	109.4	5.18	0.41	0.52	0.62	102.4	5.85	0.4	0.51	0.61	95.1	6.60	0.38	0.50	0.61
	3500	122.7	4.61	0.44	0.54	0.65	115.6	5.22	0.42	0.54	0.65	108.2	5.88	0.41	0.53	0.64	100.5	6.63	0.39	0.52	0.65
	4000	128.1	4.64	0.44	0.56	0.67	120.7	5.25	0.43	0.55	0.67	113.0	5.91	0.42	0.55	0.67	104.9	6.66	0.40	0.54	0.68

13 TON HIGH EFFICIENCY KGA156H4M (FULL LOAD) - MSAV® MULTI-STAGE AIR VOLUME SUPPLY AIR BLOWER

Entering Wet Bulb Temperature	Total Air Volume	Outdoor Air Temperature Entering Outdoor Coil																			
		85°F					95°F					105°F					115°F				
		Total Cool Cap.	Comp. Motor Input	Sensible To Total Ratio (S/T) Dry Bulb			Total Cool Cap.	Comp. Motor Input	Sensible To Total Ratio (S/T) Dry Bulb			Total Cool Cap.	Comp. Motor Input	Sensible To Total Ratio (S/T) Dry Bulb			Total Cool Cap.	Comp. Motor Input	Sensible To Total Ratio (S/T) Dry Bulb		
	cfm	kBtuh	kW	75°F	80°F	85°F	kBtuh	kW	75°F	80°F	85°F	kBtuh	kW	75°F	80°F	85°F	kBtuh	kW	75°F	80°F	85°F
63°F	4160	148.1	9.05	0.70	0.85	0.99	136.5	10.20	0.71	0.87	1.00	124.5	11.51	0.72	0.9	1.00	112.1	13.01	0.73	0.93	1.00
	5200	157.1	9.11	0.76	0.94	1.00	145.1	10.26	0.77	0.96	1.00	132.6	11.57	0.79	0.99	1.00	120.5	13.08	0.81	1.00	1.00
	6240	164.5	9.17	0.82	0.99	1.00	152.7	10.32	0.83	1.00	1.00	141.1	11.64	0.86	1.00	1.00	129.1	13.15	0.89	1.00	1.00
67°F	4160	159.3	9.13	0.54	0.68	0.82	147.4	10.28	0.54	0.69	0.84	135.3	11.59	0.53	0.70	0.86	122.4	13.09	0.53	0.71	0.89
	5200	169.0	9.20	0.58	0.74	0.90	156.5	10.35	0.58	0.75	0.92	143.4	11.66	0.58	0.77	0.95	129.8	13.16	0.58	0.79	0.98
	6240	175.9	9.25	0.61	0.80	0.97	162.7	10.40	0.62	0.81	0.99	149.1	11.71	0.62	0.83	1.00	135.2	13.20	0.63	0.86	1.00
71°F	4160	170.4	9.21	0.40	0.53	0.66	158.1	10.36	0.38	0.53	0.66	145.8	11.68	0.37	0.53	0.67	132.6	13.18	0.35	0.52	0.69
	5200	180.5	9.29	0.41	0.57	0.72	167.6	10.44	0.41	0.57	0.73	154.2	11.75	0.39	0.57	0.74	140.5	13.25	0.37	0.58	0.76
	6240	187.9	9.35	0.43	0.61	0.77	174.4	10.50	0.42	0.61	0.79	160.4	11.81	0.41	0.61	0.81	146.2	13.31	0.40	0.62	0.84

NOTE - For Temperatures and Capacities not shown in tables, see bulletin - Cooling Unit Rating Table Correction Factor Data in Miscellaneous Engineering Data section.

15 TON HIGH EFFICIENCY KGA180H4B (PART LOAD) - CONSTANT AIR VOLUME

Entering Wet Bulb Temperature	Total Air Volume	Outdoor Air Temperature Entering Outdoor Coil																			
		65°F					75°F					85°F					95°F				
		Total Cool Cap.	Comp. Motor Input	Sensible To Total Ratio (S/T) Dry Bulb			Total Cool Cap.	Comp. Motor Input	Sensible To Total Ratio (S/T) Dry Bulb			Total Cool Cap.	Comp. Motor Input	Sensible To Total Ratio (S/T) Dry Bulb			Total Cool Cap.	Comp. Motor Input	Sensible To Total Ratio (S/T) Dry Bulb		
	cfm	kBtuh	kW	75°F	80°F	85°F	kBtuh	kW	75°F	80°F	85°F	kBtuh	kW	75°F	80°F	85°F	kBtuh	kW	75°F	80°F	85°F
63°F	4800	127.8	5.04	0.70	0.82	0.93	120.4	5.79	0.7	0.82	0.94	112.8	6.62	0.70	0.83	0.96	104.8	7.53	0.70	0.85	0.98
	6000	136.3	5.05	0.74	0.87	0.99	128.3	5.81	0.75	0.88	1.00	120.1	6.64	0.75	0.90	1.00	111.6	7.56	0.76	0.92	1.00
	7200	142.4	5.05	0.78	0.92	1.00	134.1	5.82	0.79	0.94	1.00	125.4	6.66	0.80	0.96	1.00	116.7	7.58	0.81	0.98	1.00
67°F	4800	136.5	5.05	0.56	0.68	0.79	129.0	5.81	0.55	0.68	0.79	121.1	6.65	0.55	0.68	0.80	112.8	7.56	0.54	0.68	0.81
	6000	145.4	5.06	0.59	0.72	0.84	137.2	5.83	0.58	0.72	0.85	128.8	6.67	0.58	0.73	0.86	120.1	7.60	0.58	0.74	0.88
	7200	151.9	5.06	0.61	0.76	0.89	143.3	5.84	0.61	0.77	0.91	134.5	6.69	0.61	0.78	0.93	125.3	7.62	0.61	0.79	0.95
71°F	4800	145.1	5.06	0.44	0.55	0.65	137.2	5.83	0.42	0.54	0.65	129.2	6.67	0.41	0.54	0.66	120.6	7.60	0.40	0.53	0.66
	6000	154.3	5.07	0.45	0.57	0.70	145.9	5.85	0.43	0.57	0.70	137.2	6.70	0.42	0.57	0.71	128.1	7.63	0.41	0.57	0.71
	7200	161.0	5.08	0.46	0.6	0.74	152.3	5.86	0.44	0.6	0.74	143.1	6.72	0.44	0.6	0.76	133.6	7.66	0.43	0.61	0.77

15 TON HIGH EFFICIENCY KGA180H4B (FULL LOAD) - CONSTANT AIR VOLUME

Entering Wet Bulb Temperature	Total Air Volume	Outdoor Air Temperature Entering Outdoor Coil																			
		85°F					95°F					105°F					115°F				
		Total Cool Cap.	Comp. Motor Input	Sensible To Total Ratio (S/T) Dry Bulb			Total Cool Cap.	Comp. Motor Input	Sensible To Total Ratio (S/T) Dry Bulb			Total Cool Cap.	Comp. Motor Input	Sensible To Total Ratio (S/T) Dry Bulb			Total Cool Cap.	Comp. Motor Input	Sensible To Total Ratio (S/T) Dry Bulb		
	cfm	kBtuh	kW	75°F	80°F	85°F	kBtuh	kW	75°F	80°F	85°F	kBtuh	kW	75°F	80°F	85°F	kBtuh	kW	75°F	80°F	85°F
63°F	4800	172.5	9.96	0.71	0.85	0.99	160.1	11.32	0.71	0.87	1.00	146.8	12.83	0.72	0.90	1.00	132.7	14.51	0.74	0.93	1.00
	6000	182.6	9.99	0.77	0.93	1.00	169.5	11.37	0.78	0.95	1.00	155.7	12.89	0.79	0.98	1.00	141.3	14.57	0.81	1.00	1.00
	7200	190.3	10.02	0.82	0.99	1.00	177.3	11.41	0.83	1.00	1.00	164.3	12.94	0.86	1.00	1.00	150.5	14.64	0.89	1.00	1.00
67°F	4800	185.0	10.00	0.55	0.69	0.82	172.1	11.38	0.55	0.69	0.84	158.6	12.90	0.54	0.70	0.86	144.0	14.59	0.54	0.72	0.89
	6000	195.8	10.04	0.58	0.74	0.90	182.1	11.43	0.58	0.76	0.92	167.5	12.96	0.59	0.77	0.95	152.2	14.65	0.59	0.79	0.98
	7200	203.7	10.07	0.62	0.8	0.97	189.3	11.46	0.62	0.81	0.99	173.9	13.00	0.63	0.84	1.00	157.8	14.69	0.63	0.86	1.00
71°F	4800	197.2	10.04	0.41	0.54	0.67	183.9	11.43	0.39	0.54	0.67	169.9	12.97	0.38	0.53	0.68	155.0	14.67	0.36	0.53	0.69
	6000	208.4	10.09	0.42	0.58	0.72	194.2	11.48	0.41	0.58	0.73	179.4	13.03	0.4	0.58	0.75	163.3	14.73	0.38	0.59	0.77
	7200	216.6	10.12	0.43	0.61	0.78	201.8	11.52	0.42	0.62	0.79	186.2	13.07	0.42	0.62	0.81	169.7	14.78	0.41	0.63	0.84

15 TON HIGH EFFICIENCY KGA180H4M (PART LOAD) - MSAV® MULTI-STAGE AIR VOLUME SUPPLY AIR BLOWER

Entering Wet Bulb Temperature	Total Air Volume	Outdoor Air Temperature Entering Outdoor Coil																			
		65°F					75°F					85°F					95°F				
		Total Cool Cap.	Comp. Motor Input	Sensible To Total Ratio (S/T) Dry Bulb			Total Cool Cap.	Comp. Motor Input	Sensible To Total Ratio (S/T) Dry Bulb			Total Cool Cap.	Comp. Motor Input	Sensible To Total Ratio (S/T) Dry Bulb			Total Cool Cap.	Comp. Motor Input	Sensible To Total Ratio (S/T) Dry Bulb		
	cfm	kBtuh	kW	75°F	80°F	85°F	kBtuh	kW	75°F	80°F	85°F	kBtuh	kW	75°F	80°F	85°F	kBtuh	kW	75°F	80°F	85°F
63°F	3500	117.6	5.01	0.66	0.76	0.85	110.9	5.76	0.66	0.76	0.86	103.9	6.57	0.65	0.76	0.87	96.6	7.47	0.65	0.77	0.88
	4000	123.6	5.02	0.68	0.78	0.88	116.6	5.77	0.67	0.79	0.89	109.3	6.59	0.67	0.79	0.91	101.6	7.49	0.67	0.80	0.92
	4500	128.7	5.02	0.69	0.81	0.91	121.3	5.78	0.69	0.81	0.93	113.8	6.60	0.69	0.82	0.94	105.7	7.51	0.70	0.83	0.96
67°F	3500	126.1	5.02	0.54	0.63	0.73	119.1	5.77	0.53	0.63	0.73	112.0	6.59	0.52	0.63	0.73	104.3	7.50	0.51	0.63	0.74
	4000	132.3	5.03	0.55	0.65	0.75	125.1	5.78	0.54	0.65	0.76	117.5	6.61	0.53	0.65	0.76	109.6	7.52	0.52	0.65	0.77
	4500	137.6	5.03	0.56	0.67	0.78	130.0	5.80	0.55	0.67	0.78	122.1	6.63	0.55	0.67	0.79	113.9	7.54	0.54	0.68	0.80
71°F	3500	134.4	5.03	0.42	0.52	0.61	127.2	5.79	0.41	0.51	0.61	119.7	6.62	0.40	0.50	0.61	112.0	7.53	0.38	0.49	0.60
	4000	140.9	5.03	0.43	0.53	0.63	133.3	5.80	0.42	0.53	0.63	125.5	6.64	0.40	0.52	0.63	117.3	7.55	0.39	0.51	0.63
	4500	146.3	5.04	0.43	0.54	0.65	138.5	5.81	0.42	0.54	0.65	130.3	6.65	0.41	0.53	0.65	121.8	7.57	0.40	0.53	0.65

15 TON HIGH EFFICIENCY KGA180H4M (FULL LOAD) - MSAV® MULTI-STAGE AIR VOLUME SUPPLY AIR BLOWER

Entering Wet Bulb Temperature	Total Air Volume	Outdoor Air Temperature Entering Outdoor Coil																			
		85°F					95°F					105°F					115°F				
		Total Cool Cap.	Comp. Motor Input	Sensible To Total Ratio (S/T) Dry Bulb			Total Cool Cap.	Comp. Motor Input	Sensible To Total Ratio (S/T) Dry Bulb			Total Cool Cap.	Comp. Motor Input	Sensible To Total Ratio (S/T) Dry Bulb			Total Cool Cap.	Comp. Motor Input	Sensible To Total Ratio (S/T) Dry Bulb		
	cfm	kBtuh	kW	75°F	80°F	85°F	kBtuh	kW	75°F	80°F	85°F	kBtuh	kW	75°F	80°F	85°F	kBtuh	kW	75°F	80°F	85°F
63°F	4800	172.5	9.96	0.71	0.85	0.99	160.1	11.32	0.71	0.87	1.00	146.8	12.83	0.72	0.90	1.00	132.7	14.51	0.74	0.93	1.00
	6000	182.6	9.99	0.77	0.93	1.00	169.5	11.37	0.78	0.95	1.00	155.7	12.89	0.79	0.98	1.00	141.3	14.57	0.81	1.00	1.00
	7200	190.3	10.02	0.82	0.99	1.00	177.3	11.41	0.83	1.00	1.00	164.3	12.94	0.86	1.00	1.00	150.5	14.64	0.89	1.00	1.00
67°F	4800	185.0	10.00	0.55	0.69	0.82	172.1	11.38	0.55	0.69	0.84	158.6	12.90	0.54	0.70	0.86	144.0	14.59	0.54	0.72	0.89
	6000	195.8	10.04	0.58	0.74	0.90	182.1	11.43	0.58	0.76	0.92	167.5	12.96	0.59	0.77	0.95	152.2	14.65	0.59	0.79	0.98
	7200	203.7	10.07	0.62	0.80	0.97	189.3	11.46	0.62	0.81	0.99	173.9	13.00	0.63	0.84	1.00	157.8	14.69	0.63	0.86	1.00
71°F	4800	197.2	10.04	0.41	0.54	0.67	183.9	11.43	0.39	0.54	0.67	169.9	12.97	0.38	0.53	0.68	155.0	14.67	0.36	0.53	0.69
	6000	208.4	10.09	0.42	0.58	0.72	194.2	11.48	0.41	0.58	0.73	179.4	13.03	0.4	0.58	0.75	163.3	14.73	0.38	0.59	0.77
	7200	216.6	10.12	0.43	0.61	0.78	201.8	11.52	0.42	0.62	0.79	186.2	13.07	0.42	0.62	0.81	169.7	14.78	0.41	0.63	0.84

NOTE - For Temperatures and Capacities not shown in tables, see bulletin - Cooling Unit Rating Table Correction Factor Data in Miscellaneous Engineering Data section.

17.5 TON HIGH EFFICIENCY KGA210H4B (PART LOAD) - CONSTANT AIR VOLUME

Entering Wet Bulb Temperature	Total Air Volume	Outdoor Air Temperature Entering Outdoor Coil																			
		65°F					75°F					85°F					95°F				
		Total Cool Cap.	Comp. Motor Input	Sensible To Total Ratio (S/T) Dry Bulb			Total Cool Cap.	Comp. Motor Input	Sensible To Total Ratio (S/T) Dry Bulb			Total Cool Cap.	Comp. Motor Input	Sensible To Total Ratio (S/T) Dry Bulb			Total Cool Cap.	Comp. Motor Input	Sensible To Total Ratio (S/T) Dry Bulb		
	cfm	kBtuh	kW	75°F	80°F	85°F	kBtuh	kW	75°F	80°F	85°F	kBtuh	kW	75°F	80°F	85°F	kBtuh	kW	75°F	80°F	85°F
63°F	5600	142.9	5.49	0.71	0.85	0.97	134.4	6.23	0.72	0.86	0.99	125.5	7.05	0.72	0.88	1.00	116.4	7.97	0.74	0.90	1.00
	7000	151.1	5.54	0.76	0.92	1.00	142.3	6.29	0.77	0.94	1.00	133	7.11	0.79	0.96	1.00	123.5	8.03	0.80	0.98	1.00
	8400	157.9	5.58	0.82	0.98	1.00	148.7	6.34	0.83	1.00	1.00	139.3	7.16	0.84	1.00	1.00	130.5	8.08	0.87	1.00	1.00
67°F	5600	153.6	5.55	0.56	0.69	0.81	144.5	6.30	0.56	0.69	0.83	135.3	7.13	0.56	0.70	0.84	125.7	8.04	0.56	0.71	0.86
	7000	161.9	5.61	0.60	0.74	0.88	152.1	6.36	0.6	0.75	0.90	142.5	7.19	0.60	0.77	0.92	132.2	8.10	0.61	0.78	0.95
	8400	167.9	5.65	0.63	0.79	0.95	157.9	6.41	0.63	0.81	0.97	147.6	7.23	0.63	0.82	0.99	137.0	8.14	0.63	0.84	1.00
71°F	5600	164.4	5.63	0.43	0.55	0.67	154.9	6.38	0.42	0.55	0.67	145.2	7.21	0.41	0.54	0.68	135.3	8.13	0.40	0.55	0.69
	7000	172.9	5.69	0.45	0.59	0.72	162.9	6.45	0.44	0.59	0.73	152.6	7.27	0.43	0.59	0.74	142.1	8.19	0.42	0.60	0.76
	8400	179.1	5.74	0.45	0.62	0.77	168.6	6.49	0.46	0.63	0.79	157.8	7.32	0.45	0.63	0.8	146.5	8.24	0.44	0.64	0.82

17.5 TON HIGH EFFICIENCY KGA210H4B (FULL LOAD) - CONSTANT AIR VOLUME

Entering Wet Bulb Temperature	Total Air Volume	Outdoor Air Temperature Entering Outdoor Coil																			
		85°F					95°F					105°F					115°F				
		Total Cool Cap.	Comp. Motor Input	Sensible To Total Ratio (S/T) Dry Bulb			Total Cool Cap.	Comp. Motor Input	Sensible To Total Ratio (S/T) Dry Bulb			Total Cool Cap.	Comp. Motor Input	Sensible To Total Ratio (S/T) Dry Bulb			Total Cool Cap.	Comp. Motor Input	Sensible To Total Ratio (S/T) Dry Bulb		
	cfm	kBtuh	kW	75°F	80°F	85°F	kBtuh	kW	75°F	80°F	85°F	kBtuh	kW	75°F	80°F	85°F	kBtuh	kW	75°F	80°F	85°F
63°F	5600	197.5	11.26	0.71	0.86	0.99	183.2	12.71	0.73	0.89	1.00	168.8	14.37	0.74	0.91	1.00	153.6	16.25	0.75	0.94	1.00
	7000	209.3	11.34	0.78	0.95	1.00	194.5	12.8	0.79	0.97	1.00	179.6	14.45	0.81	0.99	1.00	164.6	16.33	0.83	1.00	1.00
	8400	219.3	11.42	0.83	0.99	1.00	205.2	12.89	0.85	1.00	1.00	190.5	14.55	0.88	1.00	1.00	175.2	16.42	0.91	1.00	1.00
67°F	5600	212.6	11.36	0.55	0.69	0.83	198.1	12.83	0.55	0.70	0.85	182.6	14.48	0.55	0.71	0.87	166.4	16.34	0.55	0.73	0.90
	7000	224.4	11.46	0.59	0.76	0.91	208.9	12.92	0.60	0.77	0.94	192.3	14.56	0.60	0.79	0.96	175.2	16.41	0.60	0.81	0.98
	8400	232.7	11.52	0.62	0.81	0.98	216.2	12.98	0.63	0.83	0.99	199.3	14.62	0.64	0.85	1.00	181.7	16.47	0.64	0.88	1.00
71°F	5600	228.4	11.49	0.41	0.54	0.67	212.9	12.95	0.40	0.54	0.68	197.0	14.60	0.39	0.55	0.69	180.1	16.46	0.38	0.55	0.71
	7000	240.3	11.59	0.42	0.59	0.73	223.9	13.05	0.42	0.59	0.75	206.9	14.69	0.41	0.59	0.76	189.0	16.54	0.40	0.60	0.78
	8400	248.5	11.66	0.44	0.62	0.79	231.5	13.12	0.44	0.63	0.81	214.0	14.75	0.43	0.64	0.83	195.1	16.60	0.42	0.64	0.86

17.5 TON HIGH EFFICIENCY KGA210H4M (PART LOAD) - MSAV® MULTI-STAGE AIR VOLUME SUPPLY AIR BLOWER

Entering Wet Bulb Temperature	Total Air Volume	Outdoor Air Temperature Entering Outdoor Coil																			
		65°F					75°F					85°F					95°F				
		Total Cool Cap.	Comp. Motor Input	Sensible To Total Ratio (S/T) Dry Bulb			Total Cool Cap.	Comp. Motor Input	Sensible To Total Ratio (S/T) Dry Bulb			Total Cool Cap.	Comp. Motor Input	Sensible To Total Ratio (S/T) Dry Bulb			Total Cool Cap.	Comp. Motor Input	Sensible To Total Ratio (S/T) Dry Bulb		
	cfm	kBtuh	kW	75°F	80°F	85°F	kBtuh	kW	75°F	80°F	85°F	kBtuh	kW	75°F	80°F	85°F	kBtuh	kW	75°F	80°F	85°F
63°F	4000	132.5	5.42	0.67	0.78	0.89	124.8	6.17	0.67	0.78	0.90	116.7	6.99	0.66	0.79	0.91	108.3	7.91	0.67	0.80	0.93
	4750	140.2	5.46	0.69	0.82	0.93	131.8	6.21	0.70	0.83	0.95	123.3	7.04	0.70	0.84	0.97	114.2	7.96	0.70	0.86	0.99
	5500	146.1	5.50	0.72	0.86	0.98	137.3	6.25	0.73	0.87	0.99	128.4	7.07	0.73	0.89	1.00	119.1	7.99	0.75	0.91	1.00
67°F	4000	143.1	5.48	0.54	0.64	0.75	134.9	6.23	0.53	0.64	0.75	126.4	7.05	0.52	0.64	0.76	117.6	7.98	0.52	0.64	0.77
	4750	150.9	5.52	0.55	0.67	0.78	142.3	6.28	0.55	0.67	0.79	133.3	7.10	0.54	0.68	0.81	123.7	8.03	0.54	0.68	0.82
	5500	157.2	5.56	0.57	0.70	0.82	147.9	6.32	0.57	0.70	0.84	138.6	7.15	0.57	0.71	0.85	128.5	8.06	0.57	0.72	0.87
71°F	4000	153.5	5.54	0.42	0.52	0.62	145.1	6.29	0.41	0.52	0.62	136.3	7.12	0.40	0.51	0.62	126.9	8.05	0.38	0.50	0.62
	4750	161.7	5.59	0.43	0.54	0.65	152.6	6.35	0.42	0.54	0.65	143.3	7.18	0.41	0.53	0.66	133.3	8.10	0.39	0.53	0.66
	5500	168.2	5.63	0.43	0.56	0.68	158.5	6.39	0.42	0.56	0.68	148.9	7.22	0.41	0.56	0.69	138.7	8.15	0.41	0.56	0.70

17.5 TON HIGH EFFICIENCY KGA210H4M (FULL LOAD) - MSAV® MULTI-STAGE AIR VOLUME SUPPLY AIR BLOWER

Entering Wet Bulb Temperature	Total Air Volume	Outdoor Air Temperature Entering Outdoor Coil																			
		85°F					95°F					105°F					115°F				
		Total Cool Cap.	Comp. Motor Input	Sensible To Total Ratio (S/T) Dry Bulb			Total Cool Cap.	Comp. Motor Input	Sensible To Total Ratio (S/T) Dry Bulb			Total Cool Cap.	Comp. Motor Input	Sensible To Total Ratio (S/T) Dry Bulb			Total Cool Cap.	Comp. Motor Input	Sensible To Total Ratio (S/T) Dry Bulb		
	cfm	kBtuh	kW	75°F	80°F	85°F	kBtuh	kW	75°F	80°F	85°F	kBtuh	kW	75°F	80°F	85°F	kBtuh	kW	75°F	80°F	85°F
63°F	5600	197.5	11.26	0.71	0.86	0.99	183.2	12.71	0.73	0.89	1.00	168.8	14.37	0.74	0.91	1.00	153.6	16.25	0.75	0.94	1.00
	7000	209.3	11.34	0.78	0.95	1.00	194.5	12.80	0.79	0.97	1.00	179.6	14.45	0.81	0.99	1.00	164.6	16.33	0.83	1.00	1.00
	8400	219.3	11.42	0.83	0.99	1.00	205.2	12.89	0.85	1.00	1.00	190.5	14.55	0.88	1.00	1.00	175.2	16.42	0.91	1.00	1.00
67°F	5600	212.6	11.36	0.55	0.69	0.83	198.1	12.83	0.55	0.70	0.85	182.6	14.48	0.55	0.71	0.87	166.4	16.34	0.55	0.73	0.90
	7000	224.4	11.46	0.59	0.76	0.91	208.9	12.92	0.60	0.77	0.94	192.3	14.56	0.60	0.79	0.96	175.2	16.41	0.60	0.81	0.98
	8400	232.7	11.52	0.62	0.81	0.98	216.2	12.98	0.63	0.83	0.99	199.3	14.62	0.64	0.85	1.00	181.7	16.47	0.64	0.88	1.00
71°F	5600	228.4	11.49	0.41	0.54	0.67	212.9	12.95	0.40	0.54	0.68	197.0	14.60	0.39	0.55	0.69	180.1	16.46	0.38	0.55	0.71
	7000	240.3	11.59	0.42	0.59	0.73	223.9	13.05	0.42	0.59	0.75	206.9	14.69	0.41	0.59	0.76	189.0	16.54	0.40	0.60	0.78
	8400	248.5	11.66	0.44	0.62	0.79	231.5	13.12	0.44	0.63	0.81	214.0	14.75	0.43	0.64	0.83	195.1	16.60	0.42	0.64	0.86

NOTE - For Temperatures and Capacities not shown in tables, see bulletin - Cooling Unit Rating Table Correction Factor Data in Miscellaneous Engineering Data section.

20 TON HIGH EFFICIENCY KGA240H4B (PART LOAD) - CONSTANT AIR VOLUME

Entering Wet Bulb Temperature	Total Air Volume	Outdoor Air Temperature Entering Outdoor Coil																			
		65°F					75°F					85°F					95°F				
		Total Cool Cap.	Comp. Motor Input	Sensible To Total Ratio (S/T) Dry Bulb			Total Cool Cap.	Comp. Motor Input	Sensible To Total Ratio (S/T) Dry Bulb			Total Cool Cap.	Comp. Motor Input	Sensible To Total Ratio (S/T) Dry Bulb			Total Cool Cap.	Comp. Motor Input	Sensible To Total Ratio (S/T) Dry Bulb		
	cfm	kBtuh	kW	75°F	80°F	85°F	kBtuh	kW	75°F	80°F	85°F	kBtuh	kW	75°F	80°F	85°F	kBtuh	kW	75°F	80°F	85°F
63°F	6400	130.1	5.15	0.69	0.81	0.94	123.5	5.86	0.69	0.83	0.96	116.6	6.64	0.70	0.84	0.98	109.3	7.52	0.71	0.86	0.99
	8000	137.5	5.20	0.73	0.88	0.99	130.5	5.91	0.74	0.90	1.00	123.1	6.69	0.75	0.92	1.00	115.6	7.57	0.77	0.94	1.00
	9600	143.4	5.25	0.78	0.94	1.00	136.1	5.96	0.79	0.96	1.00	128.4	6.74	0.81	0.98	1.00	120.6	7.62	0.83	0.99	1.00
67°F	6400	139.2	5.22	0.55	0.66	0.78	132.2	5.93	0.55	0.67	0.79	124.7	6.71	0.55	0.68	0.81	117.0	7.58	0.55	0.69	0.83
	8000	146.6	5.27	0.57	0.71	0.85	139.1	5.99	0.58	0.72	0.86	131.3	6.77	0.58	0.73	0.88	123.0	7.64	0.58	0.75	0.91
	9600	152.1	5.31	0.60	0.76	0.91	144.2	6.03	0.61	0.77	0.93	135.9	6.81	0.62	0.79	0.96	127.2	7.68	0.62	0.81	0.98
71°F	6400	148.1	5.28	0.42	0.53	0.64	140.8	6.00	0.42	0.53	0.65	133.2	6.79	0.41	0.54	0.65	125.1	7.66	0.41	0.53	0.66
	8000	155.9	5.34	0.43	0.56	0.69	148.1	6.06	0.43	0.56	0.69	139.8	6.85	0.42	0.57	0.71	131.2	7.73	0.42	0.58	0.73
	9600	161.6	5.39	0.44	0.59	0.73	153.2	6.11	0.44	0.60	0.75	144.7	6.90	0.44	0.61	0.76	135.7	7.77	0.44	0.62	0.78

20 TON HIGH EFFICIENCY KGA240H4B (FULL LOAD) - CONSTANT AIR VOLUME

Entering Wet Bulb Temperature	Total Air Volume	Outdoor Air Temperature Entering Outdoor Coil																			
		85°F					95°F					105°F					115°F				
		Total Cool Cap.	Comp. Motor Input	Sensible To Total Ratio (S/T) Dry Bulb			Total Cool Cap.	Comp. Motor Input	Sensible To Total Ratio (S/T) Dry Bulb			Total Cool Cap.	Comp. Motor Input	Sensible To Total Ratio (S/T) Dry Bulb			Total Cool Cap.	Comp. Motor Input	Sensible To Total Ratio (S/T) Dry Bulb		
	cfm	kBtuh	kW	75°F	80°F	85°F	kBtuh	kW	75°F	80°F	85°F	kBtuh	kW	75°F	80°F	85°F	kBtuh	kW	75°F	80°F	85°F
63°F	6400	236.6	13.31	0.73	0.88	1.00	221.6	15.06	0.74	0.91	1.00	205.8	17.06	0.76	0.94	1.00	189.2	19.35	0.78	0.97	1.00
	8000	249.2	13.43	0.79	0.97	1.00	233.7	15.17	0.80	0.98	1.00	217.5	17.17	0.83	0.99	1.00	201.1	19.47	0.86	1.00	1.00
	9600	260.1	13.53	0.85	1.00	1.00	244.7	15.28	0.87	1.00	1.00	228.9	17.29	0.90	1.00	1.00	212.1	19.59	0.94	1.00	1.00
67°F	6400	252.7	13.46	0.56	0.71	0.85	236.8	15.20	0.57	0.72	0.87	220.0	17.20	0.57	0.73	0.90	202.2	19.48	0.58	0.76	0.93
	8000	264.4	13.57	0.60	0.77	0.93	247.3	15.31	0.61	0.78	0.96	229.6	17.30	0.62	0.81	0.98	210.9	19.57	0.63	0.84	0.99
	9600	272.8	13.66	0.64	0.83	0.99	255.3	15.39	0.64	0.85	1.00	236.8	17.38	0.65	0.88	1.00	217.9	19.65	0.67	0.92	1.00
71°F	6400	269.2	13.62	0.41	0.55	0.68	252.6	15.37	0.41	0.56	0.70	235.2	17.36	0.41	0.56	0.71	216.6	19.64	0.40	0.57	0.73
	8000	281.5	13.75	0.43	0.59	0.74	263.7	15.49	0.43	0.60	0.76	245.0	17.48	0.43	0.61	0.78	225.2	19.74	0.42	0.62	0.81
	9600	289.9	13.83	0.45	0.63	0.81	271.3	15.57	0.45	0.64	0.83	252.0	17.55	0.45	0.65	0.86	231.3	19.81	0.44	0.67	0.89

20 TON HIGH EFFICIENCY KGA240H4M (PART LOAD) - MSAV® MULTI-STAGE AIR VOLUME SUPPLY AIR BLOWER

Entering Wet Bulb Temperature	Total Air Volume	Outdoor Air Temperature Entering Outdoor Coil																			
		65°F					75°F					85°F					95°F				
		Total Cool Cap.	Comp. Motor Input	Sensible To Total Ratio (S/T) Dry Bulb			Total Cool Cap.	Comp. Motor Input	Sensible To Total Ratio (S/T) Dry Bulb			Total Cool Cap.	Comp. Motor Input	Sensible To Total Ratio (S/T) Dry Bulb			Total Cool Cap.	Comp. Motor Input	Sensible To Total Ratio (S/T) Dry Bulb		
	cfm	kBtuh	kW	75°F	80°F	85°F	kBtuh	kW	75°F	80°F	85°F	kBtuh	kW	75°F	80°F	85°F	kBtuh	kW	75°F	80°F	85°F
63°F	4500	117.1	5.20	0.66	0.75	0.85	111.5	5.97	0.66	0.76	0.86	105.5	6.80	0.66	0.77	0.87	99.20	7.72	0.66	0.78	0.89
	5500	125.0	5.22	0.68	0.80	0.90	118.9	5.99	0.69	0.80	0.92	112.4	6.83	0.69	0.81	0.93	105.6	7.76	0.69	0.83	0.95
	6500	131.1	5.23	0.71	0.83	0.95	124.5	6.01	0.71	0.84	0.97	117.7	6.86	0.72	0.86	0.98	110.6	7.79	0.73	0.88	0.99
67°F	4500	125.7	5.22	0.53	0.63	0.72	119.8	5.99	0.53	0.63	0.73	113.5	6.83	0.52	0.63	0.73	106.9	7.77	0.52	0.63	0.74
	5500	133.9	5.24	0.55	0.66	0.76	127.5	6.02	0.55	0.66	0.77	120.8	6.87	0.54	0.67	0.78	113.7	7.81	0.55	0.67	0.79
	6500	140.2	5.25	0.57	0.69	0.80	133.4	6.04	0.57	0.69	0.81	126.3	6.90	0.56	0.70	0.83	118.6	7.84	0.56	0.71	0.84
71°F	4500	134.2	5.24	0.42	0.51	0.60	128.2	6.02	0.41	0.51	0.61	121.6	6.87	0.41	0.51	0.61	114.6	7.81	0.40	0.50	0.61
	5500	142.9	5.26	0.43	0.53	0.63	136.1	6.05	0.42	0.53	0.64	129.2	6.91	0.41	0.53	0.64	121.7	7.86	0.41	0.53	0.65
	6500	149.4	5.27	0.43	0.55	0.66	142.4	6.07	0.43	0.55	0.67	134.8	6.94	0.43	0.55	0.67	126.8	7.89	0.42	0.55	0.68

20 TON HIGH EFFICIENCY KGA240H4M (FULL LOAD) - MSAV® MULTI-STAGE AIR VOLUME SUPPLY AIR BLOWER

Entering Wet Bulb Temperature	Total Air Volume	Outdoor Air Temperature Entering Outdoor Coil																			
		85°F					95°F					105°F					115°F				
		Total Cool Cap.	Comp. Motor Input	Sensible To Total Ratio (S/T) Dry Bulb			Total Cool Cap.	Comp. Motor Input	Sensible To Total Ratio (S/T) Dry Bulb			Total Cool Cap.	Comp. Motor Input	Sensible To Total Ratio (S/T) Dry Bulb			Total Cool Cap.	Comp. Motor Input	Sensible To Total Ratio (S/T) Dry Bulb		
	cfm	kBtuh	kW	75°F	80°F	85°F	kBtuh	kW	75°F	80°F	85°F	kBtuh	kW	75°F	80°F	85°F	kBtuh	kW	75°F	80°F	85°F
63°F	6400	236.6	13.31	0.73	0.88	1.00	221.6	15.06	0.74	0.91	1.00	205.8	17.06	0.76	0.94	1.00	189.2	19.35	0.78	0.97	1.00
	8000	249.2	13.43	0.79	0.97	1.00	233.7	15.17	0.80	0.98	1.00	217.5	17.17	0.83	0.99	1.00	201.1	19.47	0.86	1.00	1.00
	9600	260.1	13.53	0.85	1.00	1.00	244.7	15.28	0.87	1.00	1.00	228.9	17.29	0.90	1.00	1.00	212.1	19.59	0.94	1.00	1.00
67°F	6400	252.7	13.46	0.56	0.71	0.85	236.8	15.20	0.57	0.72	0.87	220.0	17.20	0.57	0.73	0.90	202.2	19.48	0.58	0.76	0.93
	8000	264.4	13.57	0.60	0.77	0.93	247.3	15.31	0.61	0.78	0.96	229.6	17.30	0.62	0.81	0.98	210.9	19.57	0.63	0.84	0.99
	9600	272.8	13.66	0.64	0.83	0.99	255.3	15.39	0.64	0.85	1.00	236.8	17.38	0.65	0.88	1.00	217.9	19.65	0.67	0.92	1.00
71°F	6400	269.2	13.62	0.41	0.55	0.68	252.6	15.37	0.41	0.56	0.70	235.2	17.36	0.41	0.56	0.71	216.6	19.64	0.40	0.57	0.73
	8000	281.5	13.75	0.43	0.59	0.74	263.7	15.49	0.43	0.60	0.76	245.0	17.48	0.43	0.61	0.78	225.2	19.74	0.42	0.62	0.81
	9600	289.9	13.83	0.45	0.63	0.81	271.3	15.57	0.45	0.64	0.83	252.0	17.55	0.45	0.65	0.86	231.3	19.81	0.44	0.67	0.89

HUMIDITROL® DEHUMIDIFICATION SYSTEM RATINGS

NOTE - For Temperatures and Capacities not shown in tables, see bulletin - Cooling Unit Rating Table Correction Factor Data in Miscellaneous Engineering Data section.

15 TON STANDARD EFFICIENCY KGB180S4 WITH HUMIDITROL® DEHUMIDIFICATION OPERATING (PART LOAD)

Entering Wet Bulb Temperature	Total Air Volume	Outdoor Air Temperature Entering Outdoor Coil																			
		65°F					75°F					85°F					95°F				
		Total Cool Cap.	Comp. Motor Input	Sensible To Total Ratio (S/T) Dry Bulb			Total Cool Cap.	Comp. Motor Input	Sensible To Total Ratio (S/T) Dry Bulb			Total Cool Cap.	Comp. Motor Input	Sensible To Total Ratio (S/T) Dry Bulb			Total Cool Cap.	Comp. Motor Input	Sensible To Total Ratio (S/T) Dry Bulb		
	cfm	kBtuh	kW	75°F	80°F	85°F	kBtuh	kW	75°F	80°F	85°F	kBtuh	kW	75°F	80°F	85°F	kBtuh	kW	75°F	80°F	85°F
63°F	4695	85.4	5.54	0.56	0.72	0.88	73.1	6.17	0.50	0.71	0.91	60.8	6.79	0.45	0.69	0.93	48.4	7.42	0.40	0.67	0.95
	5870	90.8	5.55	0.60	0.78	0.94	77.1	6.17	0.55	0.78	0.95	63.5	6.80	0.51	0.78	0.96	49.8	7.42	0.46	0.78	0.98
	7040	96.2	5.57	0.64	0.84	1.00	81.2	6.18	0.60	0.86	1.00	66.2	6.80	0.56	0.87	1.00	51.2	7.42	0.52	0.89	1.00
67°F	4695	96.7	5.64	0.38	0.52	0.67	83.4	6.28	0.31	0.47	0.64	70.2	6.92	0.23	0.42	0.61	57.0	7.56	0.16	0.37	0.58
	5870	99.6	5.64	0.41	0.57	0.73	86.3	6.28	0.32	0.52	0.72	73.0	6.91	0.24	0.48	0.71	59.7	7.55	0.16	0.43	0.71
	7040	102.5	5.64	0.43	0.61	0.79	89.2	6.28	0.34	0.57	0.81	75.8	6.91	0.25	0.53	0.82	62.5	7.54	0.15	0.50	0.84
71°F	4695	107.9	5.78	0.24	0.37	0.49	95.2	6.42	0.15	0.30	0.45	82.5	7.06	0.06	0.24	0.41	69.7	7.70	-0.03	0.17	0.38
	5870	110.0	5.78	0.25	0.39	0.53	97.3	6.42	0.15	0.33	0.50	84.5	7.05	0.06	0.27	0.47	71.7	7.69	-0.03	0.20	0.44
	7040	112.1	5.79	0.25	0.41	0.57	99.3	6.42	0.15	0.35	0.55	86.5	7.05	0.06	0.29	0.53	73.7	7.68	-0.04	0.24	0.51

15 TON STANDARD EFFICIENCY KGB180S4 WITH HUMIDITROL® DEHUMIDIFICATION OPERATING (FULL LOAD)

Entering Wet Bulb Temperature	Total Air Volume	Outdoor Air Temperature Entering Outdoor Coil																			
		85°F					95°F					105°F					115°F				
		Total Cool Cap.	Comp. Motor Input	Sensible To Total Ratio (S/T) Dry Bulb			Total Cool Cap.	Comp. Motor Input	Sensible To Total Ratio (S/T) Dry Bulb			Total Cool Cap.	Comp. Motor Input	Sensible To Total Ratio (S/T) Dry Bulb			Total Cool Cap.	Comp. Motor Input	Sensible To Total Ratio (S/T) Dry Bulb		
	cfm	kBtuh	kW	75°F	80°F	85°F	kBtuh	kW	75°F	80°F	85°F	kBtuh	kW	75°F	80°F	85°F	kBtuh	kW	75°F	80°F	85°F
63°F	4695	146.2	8.40	0.61	0.78	0.95	130.3	9.48	0.60	0.80	0.97	114.5	10.56	0.59	0.81	0.99	98.6	11.64	0.58	0.82	1.00
	5870	153.9	8.43	0.66	0.86	0.98	137.0	9.49	0.66	0.87	0.99	120.1	10.55	0.66	0.88	0.99	103.2	11.61	0.65	0.90	1.00
	7040	161.6	8.45	0.71	0.93	1.00	143.7	9.49	0.72	0.94	1.00	125.7	10.54	0.72	0.96	1.00	107.8	11.59	0.72	0.97	1.00
67°F	4695	161.8	8.56	0.45	0.59	0.74	145.3	9.65	0.41	0.58	0.75	128.8	10.75	0.38	0.57	0.76	112.2	11.85	0.35	0.55	0.76
	5870	168.6	8.57	0.47	0.64	0.82	150.5	9.64	0.45	0.64	0.83	132.4	10.72	0.44	0.64	0.84	114.3	11.80	0.42	0.63	0.85
	7040	175.4	8.58	0.50	0.70	0.89	155.8	9.63	0.50	0.70	0.91	136.1	10.69	0.49	0.71	0.92	116.5	11.75	0.49	0.71	0.93
71°F	4695	178.6	8.67	0.29	0.43	0.57	162.1	9.76	0.25	0.41	0.56	145.7	10.85	0.21	0.38	0.55	129.2	11.94	0.17	0.35	0.54
	5870	183.8	8.69	0.30	0.46	0.62	166.1	9.78	0.26	0.44	0.62	148.4	10.87	0.21	0.41	0.61	130.7	11.96	0.17	0.39	0.61
	7040	189.0	8.71	0.31	0.49	0.67	170.1	9.80	0.26	0.47	0.67	151.1	10.88	0.22	0.45	0.68	132.2	11.97	0.17	0.43	0.69

17.5 TON STANDARD EFFICIENCY KGB210S4 WITH HUMIDITROL® DEHUMIDIFICATION OPERATING (PART LOAD)

Entering Wet Bulb Temperature	Total Air Volume	Outdoor Air Temperature Entering Outdoor Coil																			
		65°F					75°F					85°F					95°F				
		Total Cool Cap.	Comp. Motor Input	Sensible To Total Ratio (S/T) Dry Bulb			Total Cool Cap.	Comp. Motor Input	Sensible To Total Ratio (S/T) Dry Bulb			Total Cool Cap.	Comp. Motor Input	Sensible To Total Ratio (S/T) Dry Bulb			Total Cool Cap.	Comp. Motor Input	Sensible To Total Ratio (S/T) Dry Bulb		
	cfm	kBtuh	kW	75°F	80°F	85°F	kBtuh	kW	75°F	80°F	85°F	kBtuh	kW	75°F	80°F	85°F	kBtuh	kW	75°F	80°F	85°F
63°F	5600	97.6	6.98	0.56	0.73	0.90	82.6	7.80	0.51	0.72	0.93	67.6	8.62	0.46	0.72	0.97	52.6	9.44	0.41	0.71	1.00
	7000	100.5	7.03	0.60	0.79	0.95	84.5	7.82	0.56	0.79	0.97	68.4	8.62	0.52	0.79	0.98	52.4	9.41	0.47	0.80	1.00
	8400	103.3	7.08	0.65	0.85	1.00	86.3	7.85	0.62	0.86	1.00	69.3	8.61	0.58	0.87	1.00	52.2	9.37	0.54	0.88	1.00
67°F	5600	106.4	7.18	0.37	0.52	0.67	92.1	7.99	0.30	0.47	0.65	77.9	8.80	0.22	0.42	0.63	63.6	9.62	0.14	0.38	0.61
	7000	110.7	7.21	0.41	0.57	0.74	94.5	8.00	0.32	0.53	0.73	78.3	8.79	0.23	0.48	0.72	62.0	9.58	0.15	0.43	0.71
	8400	115.1	7.24	0.45	0.63	0.81	96.8	8.01	0.35	0.58	0.81	78.6	8.78	0.25	0.53	0.81	60.4	9.55	0.15	0.48	0.81
71°F	5600	116.4	7.39	0.22	0.35	0.48	102.4	8.20	0.12	0.28	0.44	88.5	9.01	0.02	0.21	0.40	74.6	9.82	-0.08	0.14	0.36
	7000	115.7	7.33	0.24	0.39	0.54	100.2	8.15	0.13	0.31	0.49	84.7	8.96	0.01	0.23	0.45	69.1	9.78	-0.10	0.15	0.41
	8400	115.1	7.28	0.26	0.43	0.59	98.0	8.10	0.13	0.34	0.54	80.8	8.92	0.01	0.25	0.50	63.6	9.74	-0.12	0.17	0.46

17.5 TON STANDARD EFFICIENCY KGB210S4 WITH HUMIDITROL® DEHUMIDIFICATION OPERATING (FULL LOAD)

Entering Wet Bulb Temperature	Total Air Volume	Outdoor Air Temperature Entering Outdoor Coil																			
		85°F					95°F					105°F					115°F				
		Total Cool Cap.	Comp. Motor Input	Sensible To Total Ratio (S/T) Dry Bulb			Total Cool Cap.	Comp. Motor Input	Sensible To Total Ratio (S/T) Dry Bulb			Total Cool Cap.	Comp. Motor Input	Sensible To Total Ratio (S/T) Dry Bulb			Total Cool Cap.	Comp. Motor Input	Sensible To Total Ratio (S/T) Dry Bulb		
	cfm	kBtuh	kW	75°F	80°F	85°F	kBtuh	kW	75°F	80°F	85°F	kBtuh	kW	75°F	80°F	85°F	kBtuh	kW	75°F	80°F	85°F
63°F	5600	170.8	10.71	0.61	0.78	0.94	152.1	12.03	0.60	0.79	0.96	133.5	13.34	0.59	0.81	0.98	114.8	14.66	0.58	0.82	1.00
	7000	176.8	10.75	0.67	0.85	0.97	156.8	12.09	0.66	0.86	0.98	136.8	13.44	0.65	0.88	0.99	116.8	14.78	0.65	0.90	1.00
	8400	182.7	10.78	0.73	0.91	1.00	161.5	12.16	0.72	0.93	1.00	140.2	13.53	0.72	0.95	1.00	118.9	14.91	0.71	0.97	1.00
67°F	5600	183.1	10.94	0.44	0.59	0.74	165.0	12.29	0.41	0.58	0.75	146.9	13.65	0.37	0.57	0.76	128.8	15.00	0.34	0.56	0.78
	7000	184.6	11.02	0.48	0.65	0.82	166.1	12.36	0.44	0.64	0.84	147.5	13.69	0.41	0.63	0.86	129.0	15.02	0.37	0.62	0.88
	8400	186.1	11.11	0.51	0.71	0.90	167.1	12.42	0.48	0.70	0.93	148.1	13.73	0.44	0.70	0.95	129.1	15.04	0.40	0.69	0.98
71°F	5600	198.5	11.09	0.29	0.43	0.57	180.2	12.52	0.24	0.40	0.56	162.0	13.96	0.19	0.37	0.54	143.7	15.39	0.14	0.33	0.52
	7000	196.6	11.21	0.31	0.47	0.63	178.8	12.59	0.26	0.44	0.62	161.1	13.97	0.20	0.40	0.60	143.3	15.36	0.15	0.37	0.59
	8400	194.6	11.33	0.33	0.51	0.69	177.4	12.66	0.27	0.47	0.68	160.2	13.99	0.21	0.44	0.66	143.0	15.32	0.15	0.40	0.65

HUMIDITROL® DEHUMIDIFICATION SYSTEM RATINGS

NOTE - For Temperatures and Capacities not shown in tables, see bulletin - Cooling Unit Rating Table Correction Factor Data in Miscellaneous Engineering Data section.

20 TON STANDARD EFFICIENCY KGB240S4 WITH HUMIDITROL® DEHUMIDIFICATION OPERATING (PART LOAD)

Entering Wet Bulb Temperature	Total Air Volume	Outdoor Air Temperature Entering Outdoor Coil																			
		65°F					75°F					85°F					95°F				
		Total Cool Cap.	Comp. Motor Input	Sensible To Total Ratio (S/T) Dry Bulb			Total Cool Cap.	Comp. Motor Input	Sensible To Total Ratio (S/T) Dry Bulb			Total Cool Cap.	Comp. Motor Input	Sensible To Total Ratio (S/T) Dry Bulb			Total Cool Cap.	Comp. Motor Input	Sensible To Total Ratio (S/T) Dry Bulb		
	cfm	kBtuh	kW	75°F	80°F	85°F	kBtuh	kW	75°F	80°F	85°F	kBtuh	kW	75°F	80°F	85°F	kBtuh	kW	75°F	80°F	85°F
63°F	6135	106.5	8.12	0.57	0.74	0.91	91.4	8.95	0.53	0.73	0.94	76.4	9.78	0.48	0.73	0.97	61.4	10.61	0.44	0.72	1.000
	7665	107.7	8.15	0.59	0.81	0.96	90.5	8.98	0.63	0.82	0.96	73.4	9.81	0.68	0.84	0.97	56.3	10.64	0.72	0.86	0.983
	9200	108.9	8.17	0.60	0.87	1.00	89.7	9.00	0.73	0.92	0.99	70.5	9.84	0.87	0.96	0.98	51.3	10.68	1.00	1.00	0.966
67°F	6135	113.8	8.30	0.39	0.57	0.747	100.5	9.14	0.29	0.51	0.73	87.2	9.98	0.20	0.45	0.71	73.8	10.82	0.11	0.40	0.69
	7665	120.5	8.31	0.39	0.58	0.772	103.7	9.13	0.29	0.54	0.78	87.0	9.95	0.19	0.49	0.79	70.2	10.77	0.09	0.44	0.80
	9200	127.1	8.32	0.39	0.60	0.798	106.9	9.12	0.29	0.56	0.84	86.7	9.92	0.18	0.53	0.87	66.5	10.72	0.07	0.49	0.91
71°F	6135	123.9	8.43	0.23	0.39	0.55	111.0	9.31	0.13	0.32	0.51	98.0	10.18	0.03	0.25	0.46	85.1	11.06	-0.07	0.18	0.42
	7665	130.1	8.43	0.23	0.40	0.57	114.0	9.29	0.13	0.33	0.54	97.9	10.16	0.03	0.26	0.50	81.8	11.02	-0.08	0.19	0.46
	9200	136.3	8.42	0.23	0.41	0.59	117.0	9.28	0.12	0.34	0.56	97.7	10.13	0.02	0.28	0.54	78.4	10.99	-0.09	0.21	0.51

20 TON STANDARD EFFICIENCY KGB240S4 WITH HUMIDITROL® DEHUMIDIFICATION OPERATING (FULL LOAD)

Entering Wet Bulb Temperature	Total Air Volume	Outdoor Air Temperature Entering Outdoor Coil																			
		85°F					95°F					105°F					115°F				
		Total Cool Cap.	Comp. Motor Input	Sensible To Total Ratio (S/T) Dry Bulb			Total Cool Cap.	Comp. Motor Input	Sensible To Total Ratio (S/T) Dry Bulb			Total Cool Cap.	Comp. Motor Input	Sensible To Total Ratio (S/T) Dry Bulb			Total Cool Cap.	Comp. Motor Input	Sensible To Total Ratio (S/T) Dry Bulb		
	cfm	kBtuh	kW	75°F	80°F	85°F	kBtuh	kW	75°F	80°F	85°F	kBtuh	kW	75°F	80°F	85°F	kBtuh	kW	75°F	80°F	85°F
63°F	6135	193.8	13.08	0.63	0.78	0.94	172.5	14.55	0.61	0.80	0.96	151.2	16.01	0.59	0.82	0.98	129.9	17.48	0.58	0.84	1.00
	7665	196.2	13.18	0.66	0.84	0.97	175.8	14.63	0.66	0.86	0.98	155.4	16.07	0.65	0.88	0.99	135.0	17.51	0.65	0.90	1.00
	9200	198.6	13.29	0.69	0.91	1.00	179.1	14.71	0.70	0.92	1.00	159.5	16.13	0.71	0.93	1.00	140.0	17.55	0.73	0.95	1.00
67°F	6135	203.6	13.36	0.48	0.61	0.73	187.0	14.86	0.44	0.59	0.74	170.5	16.35	0.40	0.57	0.75	154.0	17.85	0.36	0.56	0.75
	7665	207.9	13.41	0.49	0.64	0.79	190.1	14.88	0.46	0.64	0.82	172.2	16.36	0.42	0.63	0.84	154.3	17.83	0.38	0.63	0.87
	9200	212.3	13.46	0.50	0.68	0.86	193.1	14.91	0.47	0.69	0.90	173.8	16.36	0.44	0.69	0.94	154.6	17.81	0.41	0.70	0.98
71°F	6135	221.9	13.72	0.31	0.44	0.56	203.9	15.20	0.26	0.41	0.56	185.9	16.67	0.22	0.39	0.56	167.9	18.15	0.169	0.36	0.56
	7665	224.1	13.68	0.32	0.46	0.59	205.4	15.17	0.27	0.43	0.60	186.8	16.67	0.22	0.41	0.60	168.1	18.16	0.177	0.39	0.60
	9200	226.4	13.64	0.33	0.48	0.63	207.0	15.15	0.28	0.46	0.63	187.6	16.66	0.23	0.43	0.64	168.2	18.17	0.186	0.41	0.64

25 TON STANDARD EFFICIENCY KGB300S4 WITH HUMIDITROL® DEHUMIDIFICATION OPERATING (PART LOAD)

Entering Wet Bulb Temperature	Total Air Volume	Outdoor Air Temperature Entering Outdoor Coil																			
		65°F					75°F					85°F					95°F				
		Total Cool Cap.	Comp. Motor Input	Sensible To Total Ratio (S/T) Dry Bulb			Total Cool Cap.	Comp. Motor Input	Sensible To Total Ratio (S/T) Dry Bulb			Total Cool Cap.	Comp. Motor Input	Sensible To Total Ratio (S/T) Dry Bulb			Total Cool Cap.	Comp. Motor Input	Sensible To Total Ratio (S/T) Dry Bulb		
	cfm	kBtuh	kW	75°F	80°F	85°F	kBtuh	kW	75°F	80°F	85°F	kBtuh	kW	75°F	80°F	85°F	kBtuh	kW	75°F	80°F	85°F
63°F	8000	100.4	7.25	.55	.74	.93	83.6	7.96	.47	.71	.96	66.7	8.67	.38	.69	.99	49.8	9.38	.29	.66	1.00
	9500	106.3	7.33	.58	.77	.97	89.3	8.02	.50	.76	.99	72.3	8.71	.42	.74	1.00	55.2	9.40	.34	.72	1.00
	11,000	112.2	7.40	.61	.81	.99	95.0	8.08	.53	.80	1.00	77.8	8.75	.46	.80	1.00	60.6	9.43	.38	.79	1.00
67°F	8000	116.1	7.40	.37	.54	.71	98.8	8.14	.27	.48	.70	81.5	8.87	.17	.43	.69	64.2	9.61	.07	.37	.68
	9500	106.3	7.33	.58	.77	.97	89.3	8.02	.50	.76	.99	72.3	8.71	.42	.74	1.00	55.2	9.40	.34	.72	1.00
	11,000	129.2	7.52	.40	.58	.77	109.6	8.24	.30	.54	.78	90.1	8.95	.20	.50	.80	70.5	9.66	.09	.46	.82
71°F	8000	131.7	7.55	.19	.34	.49	114.0	8.31	.07	.25	.44	96.3	9.07	-.04	.17	.38	78.6	9.83	-.16	.09	.33
	9500	139.0	7.60	.19	.35	.51	119.1	8.36	.07	.27	.46	99.3	9.11	-.06	.19	.43	79.5	9.86	-.18	.11	.38
	11,000	146.2	7.65	.19	.36	.52	124.2	8.40	.07	.28	.49	102.3	9.14	-.07	.20	.47	80.4	9.89	-.20	.12	.44

25 TON STANDARD EFFICIENCY KGB300S4 WITH HUMIDITROL® DEHUMIDIFICATION OPERATING (FULL LOAD)

Entering Wet Bulb Temperature	Total Air Volume	Outdoor Air Temperature Entering Outdoor Coil																			
		85°F					95°F					105°F					115°F				
		Total Cool Cap.	Comp. Motor Input	Sensible To Total Ratio (S/T) Dry Bulb			Total Cool Cap.	Comp. Motor Input	Sensible To Total Ratio (S/T) Dry Bulb			Total Cool Cap.	Comp. Motor Input	Sensible To Total Ratio (S/T) Dry Bulb			Total Cool Cap.	Comp. Motor Input	Sensible To Total Ratio (S/T) Dry Bulb		
	cfm	kBtuh	kW	75°F	80°F	85°F	kBtuh	kW	75°F	80°F	85°F	kBtuh	kW	75°F	80°F	85°F	kBtuh	kW	75°F	80°F	85°F
63°F	8000	260.3	14.9	.66	.80	.95	234.7	16.7	.65	.81	.97	209.1	18.5	.65	.82	.98	183.5	20.3	.65	.82	1.00
	9500	276.4	15.0	.69	.83	.96	248.2	16.8	.70	.84	.97	220.1	18.6	.70	.85	.99	191.9	20.4	.71	.85	1.00
	11,000	279.6	15.1	.73	.87	1.00	253.1	16.9	.75	.87	1.00	226.7	18.7	.76	.88	1.00	200.3	20.5	.78	.89	1.00
67°F	8000	283.9	15.2	.50	.64	.78	257.7	17.0	.48	.63	.79	231.5	18.8	.46	.63	.80	205.3	20.7	.44	.62	.81
	9500	294.1	15.3	.52	.67	.81	266.7	17.1	.51	.66	.82	239.3	18.9	.49	.66	.82	211.9	20.8	.48	.66	.83
	11,000	302.0	15.4	.54	.69	.84	274.2	17.2	.53	.69	.85	246.3	19.1	.53	.69	.86	218.4	20.9	.52	.69	.87
71°F	8000	307.5	15.5	.34	.47	.61	280.7	17.3	.31	.46	.61	253.9	19.2	.27	.44	.61	227.2	21.1	.24	.43	.61
	9500	311.7	15.5	.35	.51	.66	285.1	17.4	.32	.49	.66	258.5	19.3	.28	.47	.66	231.9	21.2	.25	.46	.66
	11,000	324.5	15.6	.35	.51	.67	295.2	17.5	.32	.51	.69	265.9	19.4	.29	.50	.71	236.6	21.3	.26	.50	.73

BLOWER DATA

BLOWER TABLE INCLUDES RESISTANCE FOR BASE UNIT ONLY WITH DRY INDOOR COIL & AIR FILTERS IN PLACE
FOR ALL UNITS ADD:

1 - Wet indoor coil air resistance of selected unit.
2 - Any factory installed options air resistance (heat section, economizer, etc.)
3 - Any field installed accessories air resistance (heat section, duct resistance, diffuser, etc.)

Then determine from blower table blower motor output and drive required.
See page 36 for wet coil and option/accessory air resistance data.
See page 36 for factory installed drive kit specifications.

MINIMUM AIR VOLUME REQUIRED FOR DIFFERENT GAS HEAT SIZES

Standard (S) and Medium Heat (M) - 4500 cfm minimum
High Heat (H) - 5125 cfm minimum

Air Volume cfm	TOTAL STATIC PRESSURE - Inches Water Gauge (Pa)																									
	0.20		0.40		0.60		0.80		1.00		1.20		1.40		1.60		1.80		2.00		2.20		2.40		2.60	
	RPM	BHP	RPM	BHP	RPM	BHP	RPM	BHP	RPM	BHP	RPM	BHP	RPM	BHP	RPM	BHP	RPM	BHP	RPM	BHP	RPM	BHP	RPM	BHP	RPM	BHP
2750	385	0.30	505	0.50	600	0.70	680	0.90	755	1.10	820	1.30	- - -	- - -	- - -	- - -	- - -	- - -	- - -	- - -	- - -	- - -	- - -	- - -	- - -	- - -
3000	395	0.35	515	0.55	610	0.75	685	1.00	760	1.20	825	1.45	885	1.70	- - -	- - -	- - -	- - -	- - -	- - -	- - -	- - -	- - -	- - -	- - -	- - -
3250	405	0.40	520	0.60	615	0.85	695	1.10	765	1.30	830	1.60	890	1.85	950	2.10	- - -	- - -	- - -	- - -	- - -	- - -	- - -	- - -	- - -	- - -
3500	415	0.45	530	0.70	620	0.95	700	1.20	775	1.45	840	1.70	900	2.00	955	2.25	1005	2.55	- - -	- - -	- - -	- - -	- - -	- - -	- - -	- - -
3750	425	0.50	540	0.75	630	1.05	710	1.30	780	1.60	845	1.85	905	2.15	960	2.45	1010	2.70	1060	3.00	1110	3.30	- - -	- - -	- - -	- - -
4000	435	0.55	545	0.85	635	1.10	715	1.40	785	1.70	850	2.00	910	2.30	965	2.60	1020	2.90	1070	3.25	1115	3.55	1160	3.85	1205	4.15
4250	445	0.60	555	0.90	645	1.25	725	1.55	795	1.85	855	2.15	915	2.45	970	2.80	1025	3.10	1075	3.45	1120	3.75	1165	4.10	1210	4.45
4500	455	0.70	565	1.00	655	1.35	730	1.65	800	2.00	865	2.35	925	2.65	980	3.00	1030	3.30	1080	3.65	1130	4.05	1175	4.35	1215	4.70
4750	470	0.75	575	1.10	660	1.45	740	1.80	810	2.15	870	2.50	930	2.85	985	3.20	1040	3.55	1085	3.90	1135	4.25	1180	4.65	1225	5.00
5000	480	0.85	585	1.25	670	1.60	750	1.95	815	2.30	880	2.70	940	3.05	995	3.40	1045	3.80	1095	4.15	1140	4.50	1185	4.90	1230	5.30
5250	495	0.95	595	1.35	680	1.70	755	2.10	825	2.50	890	2.90	945	3.25	1000	3.65	1050	4.00	1100	4.40	1150	4.80	1195	5.20	1235	5.60
5500	505	1.05	605	1.45	690	1.85	765	2.25	835	2.65	895	3.05	955	3.45	1010	3.85	1060	4.25	1110	4.70	1155	5.10	1200	5.50	1240	5.90
5750	520	1.15	615	1.60	700	2.00	775	2.45	840	2.85	905	3.25	960	3.65	1015	4.10	1065	4.50	1115	4.95	1160	5.35	1205	5.80	1250	6.25
6000	530	1.30	630	1.75	710	2.15	785	2.60	850	3.05	910	3.45	970	3.90	1025	4.35	1075	4.80	1120	5.20	1170	5.65	1215	6.10	1255	6.55
6250	545	1.40	640	1.90	720	2.35	795	2.80	860	3.25	920	3.70	975	4.15	1030	4.60	1080	5.05	1130	5.50	1175	5.95	1220	6.45	1265	6.90
6500	560	1.55	650	2.05	730	2.50	805	3.00	870	3.45	930	3.95	985	4.40	1040	4.85	1090	5.35	1140	5.85	1185	6.30	1225	6.75	1270	7.25
6750	570	1.70	665	2.20	745	2.70	815	3.20	880	3.70	940	4.20	995	4.65	1045	5.10	1095	5.60	1145	6.10	1190	6.60	1235	7.10	1275	7.60
7000	585	1.85	675	2.35	755	2.90	825	3.40	890	3.95	950	4.45	1005	4.95	1055	5.40	1105	5.95	1155	6.45	1200	6.95	1240	7.45	1285	8.00
7250	600	2.00	690	2.60	765	3.10	835	3.65	900	4.15	955	4.65	1015	5.25	1065	5.75	1115	6.25	1160	6.75	1205	7.30	1250	7.85	1290	8.35
7500	615	2.20	700	2.75	775	3.30	845	3.85	910	4.45	965	4.95	1020	5.50	1075	6.05	1125	6.60	1170	7.15	1215	7.65	1260	8.25	1300	8.75
7750	630	2.40	715	3.00	790	3.55	855	4.10	920	4.70	975	5.25	1030	5.80	1080	6.35	1130	6.90	1180	7.50	1225	8.05	1265	8.60	1305	9.15
8000	640	2.55	725	3.20	800	3.80	865	4.35	930	4.95	985	5.50	1040	6.10	1090	6.70	1140	7.25	1185	7.85	1230	8.40	1275	9.00	1315	9.60
8250	655	2.80	740	3.40	810	4.00	880	4.65	940	5.25	995	5.85	1050	6.45	1100	7.05	1150	7.65	1195	8.25	1240	8.85	1280	9.40	1325	10.05
8500	670	3.00	750	3.65	825	4.30	890	4.90	950	5.55	1005	6.15	1060	6.80	1110	7.40	1160	8.05	1205	8.65	1250	9.25	1290	9.85	1330	10.45
8750	685	3.25	765	3.90	835	4.55	900	5.20	960	5.85	1015	6.45	1070	7.15	1120	7.75	1165	8.35	1215	9.05	1255	9.65	1300	10.30	1340	10.90
9000	700	3.50	780	4.20	850	4.85	910	5.50	970	6.15	1025	6.80	1080	7.50	1130	8.15	1175	8.75	1220	9.40	1265	10.10	1310	10.80	1350	11.40
9250	715	3.75	790	4.45	860	5.15	925	5.85	985	6.55	1040	7.20	1090	7.85	1140	8.55	1185	9.20	1230	9.85	1275	10.55	1315	11.20	- - -	- - -
9500	730	4.00	805	4.75	875	5.45	935	6.15	995	6.90	1050	7.60	1100	8.25	1150	8.95	1195	9.60	1240	10.30	1285	11.05	- - -	- - -	- - -	- - -
9750	745	4.30	820	5.05	885	5.75	950	6.55	1005	7.20	1060	7.95	1110	8.65	1160	9.40	1205	10.05	1250	10.80	1295	11.50	- - -	- - -	- - -	- - -
10,000	760	4.60	835	5.40	900	6.15	960	6.85	1015	7.60	1070	8.35	1120	9.05	1170	9.80	1215	10.50	1260	11.25	- - -	- - -	- - -	- - -	- - -	- - -
10,250	775	4.90	845	5.65	910	6.45	970	7.20	1030	8.00	1080	8.75	1135	9.55	1180	10.25	1225	11.00	- - -	- - -	- - -	- - -	- - -	- - -	- - -	- - -
10,500	790	5.20	860	6.00	925	6.85	985	7.65	1040	8.40	1095	9.20	1145	10.00	1190	10.70	1235	11.45	- - -	- - -	- - -	- - -	- - -	- - -	- - -	- - -
10,750	805	5.55	875	6.40	940	7.25	1000	8.05	1055	8.85	1105	9.65	1155	10.45	1200	11.20	- - -	- - -	- - -	- - -	- - -	- - -	- - -	- - -	- - -	- - -
11,000	820	5.90	890	6.80	950	7.60	1010	8.45	1065	9.30	1115	10.05	1165	10.90	- - -	- - -	- - -	- - -	- - -	- - -	- - -	- - -	- - -	- - -	- - -	- - -

BLOWER DATA

FACTORY INSTALLED BELT DRIVE KIT SPECIFICATIONS

Motor Efficiency	Nominal hp	Maximum hp	Drive Kit Number	RPM Range
Standard or High	2	2.30	1	535 - 725
Standard or High	2	2.30	2	710 - 965
Standard	3	3.45	1	535 - 725
Standard	3	3.45	2	710 - 965
Standard	5	5.75	3	685 - 856
Standard	5	5.75	4	850 - 1045
Standard	5	5.75	5	945 - 1185
Standard	7.5	8.63	6	850 - 1045
Standard	7.5	8.63	7	945 - 1185
Standard	7.5	8.63	8	1045 - 1285
Standard	10	11.50	7	945 - 1185
Standard	10	11.50	10	1045 - 1285
Standard	10	11.50	11	1135 - 1365

NOTE - Using total air volume and system static pressure requirements determine from blower performance tables rpm and motor output required. Maximum usable output of motors furnished are shown. In Canada, nominal motor output is also maximum usable motor output. If motors of comparable output are used, be sure to keep within the service factor limitations outlined on the motor nameplate.
NOTE – Units equipped with MSAV® Multi-Stage Air Volume option are limited to a motor service factor of 1.0.

FACTORY INSTALLED OPTIONS/FIELD INSTALLED ACCESSORY AIR RESISTANCE - in w.g.

Air Volume cfm	Wet Indoor Coil		Humiditrol® Condenser Reheat Coil	Gas Heat Exchanger			Economizer	Filters		Horizontal Roof Curb	
	156H 180H 180S	210H 210S 240H 240S 300S		Low/ Standard Heat	Medium Heat	High Heat		MERV 8	MERV 13	156H thru 240H	300S
2750	.01	.02	.01	.02	.04	.05	- - -	.01	.03	.03	-
3000	.01	.02	.01	.03	.04	.05	- - -	.01	.03	.04	-
3250	.01	.03	.01	.03	.05	.06	- - -	.01	.04	.04	.01
3500	.01	.03	.02	.03	.05	.06	- - -	.01	.04	.05	.01
3750	.01	.03	.02	.04	.06	.07	- - -	.01	.04	.05	.01
4000	.02	.04	.02	.04	.06	.07	- - -	.01	.04	.06	.02
4250	.02	.04	.02	.04	.06	.08	- - -	.01	.05	.07	.02
4500	.02	.05	.02	.05	.07	.09	- - -	.01	.05	.07	.02
4750	.02	.05	.02	.05	.08	.10	- - -	.02	.05	.08	.03
5000	.02	.05	.02	.05	.09	.11	- - -	.02	.06	.08	.03
5250	.02	.06	.03	.06	.10	.12	- - -	.02	.06	.09	.04
5500	.02	.07	.03	.06	.10	.13	- - -	.02	.06	.10	.04
5750	.03	.07	.03	.06	.11	.14	- - -	.02	.07	.11	.05
6000	.03	.08	.03	.07	.12	.15	- - -	.03	.07	.11	.06
6250	.03	.08	.03	.07	.12	.16	.01	.03	.07	.12	.07
6500	.03	.09	.04	.08	.13	.17	.02	.03	.08	.13	.08
6750	.04	.10	.04	.08	.14	.18	.03	.03	.08	.14	.08
7000	.04	.10	.04	.09	.15	.19	.04	.04	.08	.15	.09
7250	.04	.11	.04	.09	.16	.20	.05	.04	.09	.16	.10
7500	.05	.12	.05	.10	.17	.21	.06	.04	.09	.17	.11
8000	.05	.13	.05	.11	.19	.24	.09	.05	.10	.19	.13
8500	.06	.15	.05	.12	.20	.26	.11	.05	.10	.21	.15
9000	.07	.16	.06	.13	.23	.29	.14	.06	.11	.24	.17
9500	.08	.18	.07	.14	.25	.32	.16	.07	.12	.26	.19
10,000	.08	.20	.07	.16	.27	.35	.19	.07	.12	.29	.21
10,500	.09	.22	.08	.17	.30	.38	.22	.08	.13	.31	.24
11,000	.11	.24	.08	.18	.31	.40	.25	.09	.14	.34	.27

CEILING DIFFUSER AIR RESISTANCE - in. w.g.

Air Volume cfm	Step-Down Diffuser						Flush Diffuser	
	RTD11-185S			RTD11-275S			FD11-185S	FD11-275S
	2 Ends Open	1 Side/2 Ends Open	All Ends & Sides Open	2 Ends Open	1 Side/2 Ends Open	All Ends & Sides Open		
5000	.51	.44	.39	- - -	- - -	- - -	.27	- - -
5200	.56	.48	.42	- - -	- - -	- - -	.30	- - -
5400	.61	.52	.45	- - -	- - -	- - -	.33	- - -
5600	.66	.56	.48	- - -	- - -	- - -	.36	- - -
5800	.71	.59	.51	- - -	- - -	- - -	.39	- - -
6000	.76	.63	.55	.36	.31	.27	.42	.29
6200	.80	.68	.59	- - -	- - -	- - -	.46	- - -
6400	.86	.72	.63	- - -	- - -	- - -	.50	- - -
6500	- - -	- - -	- - -	.42	.36	.31	- - -	.34
6600	.92	.77	.67	- - -	- - -	- - -	.54	- - -
6800	.99	.83	.72	- - -	- - -	- - -	.58	- - -
7000	1.03	.87	.76	.49	.41	.36	.62	.40
7200	1.09	.92	.80	- - -	- - -	- - -	.66	- - -
7400	1.15	.97	.84	- - -	- - -	- - -	.70	- - -
7500	- - -	- - -	- - -	.51	.46	.41	- - -	.45
7600	1.20	1.02	.88	- - -	- - -	- - -	.74	- - -
8000	- - -	- - -	- - -	.59	.49	.43	- - -	.50
8500	- - -	- - -	- - -	.69	.58	.50	- - -	.57
9000	- - -	- - -	- - -	.79	.67	.58	- - -	.66
9500	- - -	- - -	- - -	.89	.75	.65	- - -	.74
10,000	- - -	- - -	- - -	1.00	.84	.73	- - -	.81
10,500	- - -	- - -	- - -	1.10	.92	.80	- - -	.89
11,000	- - -	- - -	- - -	1.21	1.01	.88	- - -	.96

CEILING DIFFUSER AIR THROW DATA

Model No.	Air Volume cfm	[1] Effective Throw Range - ft.	
		RTD11-185S Step-Down	FD11-185S Flush
156 180	5600	39 - 49	28 - 37
	5800	42 - 51	29 - 38
	6000	44 - 54	40 - 50
	6200	45 - 55	42 - 51
	6400	46 - 55	43 - 52
	6600	47 - 56	45 - 56

[1] Throw is the horizontal or vertical distance an airstream travels on leaving the outlet or diffuser before the maximum velocity is reduced to 50 ft. per minute. Four sides open.

Model No.	Air Volume cfm	[1] Effective Throw Range - ft.	
		RTD11-275S Step-Down	FD11-275S Flush
210 240 300	7200	33 - 38	26 - 35
	7400	35 - 40	28 - 37
	7600	36 - 41	29 - 38
	7800	38 - 43	40 - 50
	8000	39 - 44	42 - 51
	8200	41 - 46	43 - 52
	8400	43 - 49	44 - 54
	8600	44 - 50	46 - 57
	8800	47 - 55	48 - 59

POWER EXHAUST FAN PERFORMANCE

Return Air System Static Pressure in. w.g.	Air Volume Exhausted cfm
0.00	8630
0.05	8210
0.10	7725
0.15	7110
0.20	6470
0.25	5790
0.30	5060
0.35	4300
0.40	3510
0.45	2690
0.50	1840

KGB180S4

[1] Voltage - 60hz		208/230V - 3 Ph			460V - 3 Ph			575V - 3 Ph		
Compressor 1	Rated Load Amps	13.2			6.3			4.9		
	Locked Rotor Amps	93			60			41		
Compressor 2	Rated Load Amps	13.2			6.3			4.9		
	Locked Rotor Amps	93			60			41		
Compressor 3	Rated Load Amps	13.2			6.3			4.9		
	Locked Rotor Amps	93			60			41		
Outdoor Fan Motors (3)	Full Load Amps (total)	2.4 (7.2)			1.3 (3.9)			1 (3)		
Power Exhaust (2) 0.33 HP	Full Load Amps (total)	2.4 (4.8)			1.3 (2.6)			1 (2)		
Service Outlet 115V GFI (amps)		15			15			20		
Indoor Blower Motor	Horsepower	3	5	7.5	3	5	7.5	3	5	7.5
	Full Load Amps	10.6	16.7	24.2	4.8	7.6	11	3.9	6.1	9
[2] Maximum Overcurrent Protection	Unit Only	70	80	100	35	35	45	25	30	35
	With (2) 0.33 HP Power Exhaust	70	80	100	35	40	50	25	30	35
[3] Minimum Circuit Ampacity	Unit Only	61	68	78	30	33	37	23	26	29
	With (2) 0.33 HP Power Exhaust	66	72	82	32	35	40	25	28	31

NOTE - All units have a minimum Short Circuit Current Rating (SCCR) of 5000 amps.
[1] Extremes of operating range are plus and minus 10% of line voltage.
[2] HACR type breaker or fuse.
[3] Refer to National or Canadian Electrical Code manual to determine wire, fuse and disconnect size requirements.

KGB210S4

[1] Voltage - 60hz		208/230V - 3 Ph			460V - 3 Ph			575V - 3 Ph		
Compressor 1	Rated Load Amps	19.6			8.2			6.6		
	Locked Rotor Amps	136			66.1			55.3		
Compressor 2	Rated Load Amps	19.6			8.2			6.6		
	Locked Rotor Amps	136			66.1			55.3		
Compressor 3	Rated Load Amps	19.6			8.2			6.6		
	Locked Rotor Amps	136			66.1			55.3		
Outdoor Fan Motors (3)	Full Load Amps (total)	2.4 (7.2)			1.3 (3.9)			1 (3)		
Power Exhaust (2) 0.33 HP	Full Load Amps (total)	2.4 (4.8)			1.3 (2.6)			1 (2)		
Service Outlet 115V GFI (amps)		15			15			20		
Indoor Blower Motor	Horsepower	3	5	7.5	3	5	7.5	3	5	7.5
	Full Load Amps	10.6	16.7	24.2	4.8	7.6	11	3.9	6.1	9
[2] Maximum Overcurrent Protection	Unit Only	100	100	110	40	45	50	30	35	40
	With (2) 0.33 HP Power Exhaust	100	110	125	45	45	50	35	35	45
[3] Minimum Circuit Ampacity	Unit Only	82	88	97	36	39	43	29	31	35
	With (2) 0.33 HP Power Exhaust	87	93	102	38	41	45	31	33	37

NOTE - All units have a minimum Short Circuit Current Rating (SCCR) of 5000 amps.
[1] Extremes of operating range are plus and minus 10% of line voltage.
[2] HACR type breaker or fuse.
[3] Refer to National or Canadian Electrical Code manual to determine wire, fuse and disconnect size requirements.

KGB240S4

[1] Voltage - 60hz		208/230V - 3 Ph			460V - 3 Ph			575V - 3 Ph		
Compressor 1	Rated Load Amps	22.4			10.6			7.7		
	Locked Rotor Amps	149			75			54		
Compressor 2	Rated Load Amps	22.4			10.6			7.7		
	Locked Rotor Amps	149			75			54		
Compressor 3	Rated Load Amps	25			12.2			9		
	Locked Rotor Amps	164			100			78		
Outdoor Fan Motors (4)	Full Load Amps	2.4			1.3			1		
	(total)	(9.6)			(5.2)			(4)		
Power Exhaust (2) 0.33 HP	Full Load Amps	2.4			1.3			1		
	(total)	(4.8)			(2.6)			(2)		
Service Outlet 115V GFI (amps)		15			15			20		
Indoor Blower Motor	Horsepower	5	7.5	10	5	7.5	10	5	7.5	10
	Full Load Amps	16.7	24.2	30.8	7.6	11	14	6.1	9	11
[2] Maximum Overcurrent Protection	Unit Only	125	125	125	60	60	70	45	45	50
	With (2) 0.33 HP Power Exhaust	125	125	150	60	60	70	45	50	50
[3] Minimum Circuit Ampacity	Unit Only	103	110	118	50	53	57	37	40	43
	With (2) 0.33 HP Power Exhaust	108	115	123	52	56	59	39	42	45

NOTE - All units have a minimum Short Circuit Current Rating (SCCR) of 5000 amps.
[1] Extremes of operating range are plus and minus 10% of line voltage.
[2] HACR type breaker or fuse.
[3] Refer to National or Canadian Electrical Code manual to determine wire, fuse and disconnect size requirements.

KGB300S4

[1] Voltage - 60hz		208/230V - 3 Ph			460V - 3 Ph			575V - 3 Ph		
Compressor 1	Rated Load Amps	19.6			8.2			6.6		
	Locked Rotor Amps	136			66.1			55.3		
Compressor 2	Rated Load Amps	19.6			8.2			6.6		
	Locked Rotor Amps	136			66.1			55.3		
Compressor 3	Rated Load Amps	22.4			10.6			7.7		
	Locked Rotor Amps	149			75			54		
Compressor 4	Rated Load Amps	22.4			10.6			7.7		
	Locked Rotor Amps	149			75			54		
Outdoor Fan Motors (6)	Full Load Amps	2.4			1.3			1		
	(total)	(14.4)			(7.8)			(6)		
Power Exhaust (2) 0.33 HP	Full Load Amps	2.4			1.3			1		
	(total)	(4.8)			(2.6)			(2)		
Service Outlet 115V GFI (amps)		15			15			20		
Indoor Blower Motor	Horsepower	5	7.5	10	5	7.5	10	5	7.5	10
	Full Load Amps	16.7	24.2	30.8	7.6	11	14	6.1	9	11
[2] Maximum Overcurrent Protection	Unit Only	125	150	150	60	70	70	50	50	50
	With (2) 0.33 HP Power Exhaust	150	150	150	60	70	70	50	50	60
[3] Minimum Circuit Ampacity	Unit Only	121	129	137	56	60	63	43	46	49
	With (2) 0.33 HP Power Exhaust	126	134	142	59	62	66	45	48	51

NOTE - All units have a minimum Short Circuit Current Rating (SCCR) of 5000 amps.
[1] Extremes of operating range are plus and minus 10% of line voltage.
[2] HACR type breaker or fuse.
[3] Refer to National or Canadian Electrical Code manual to determine wire, fuse and disconnect size requirements.

KGA156H4

[1] Voltage - 60hz		208/230V - 3 Ph			460V - 3 Ph			575V - 3 Ph		
Compressor 1	Rated Load Amps	14.5			6.3			6		
	Locked Rotor Amps	98			55			41		
Compressor 2	Rated Load Amps	14.5			6.3			6		
	Locked Rotor Amps	98			55			41		
Compressor 3	Rated Load Amps	14.5			6.3			6		
	Locked Rotor Amps	98			55			41		
Outdoor Fan Motors (3)	Full Load Amps (total)	2.4 (7.2)			1.3 (3.9)			1 (3)		
Power Exhaust (2) 0.33 HP	Full Load Amps (total)	2.4 (4.8)			1.3 (2.6)			1 (2)		
Service Outlet 115V GFI (amps)		15			15			20		
Indoor Blower Motor	Horsepower	2	3	5	2	3	5	2	3	5
	Full Load Amps	7.5	10.6	16.7	3.4	4.8	7.6	2.7	3.9	6.1
[2] Maximum Overcurrent Protection	Unit Only	70	70	80	30	35	35	30	30	30
	With (2) 0.33 HP Power Exhaust	80	80	90	35	35	40	30	30	35
[3] Minimum Circuit Ampacity	Unit Only	62	65	72	28	30	33	26	27	29
	With (2) 0.33 HP Power Exhaust	67	70	77	31	32	35	28	29	31

NOTE - All units have a minimum Short Circuit Current Rating (SCCR) of 5000 amps.
[1] Extremes of operating range are plus and minus 10% of line voltage.
[2] HACR type breaker or fuse.
[3] Refer to National or Canadian Electrical Code manual to determine wire, fuse and disconnect size requirements.

KGA180H4

[1] Voltage - 60hz		208/230V - 3 Ph			460V - 3 Ph			575V - 3 Ph		
Compressor 1	Rated Load Amps	13.2			6.3			4.9		
	Locked Rotor Amps	93			60			41		
Compressor 2	Rated Load Amps	13.2			6.3			4.9		
	Locked Rotor Amps	93			60			41		
Compressor 3	Rated Load Amps	13.2			6.3			4.9		
	Locked Rotor Amps	93			60			41		
Outdoor Fan Motors (4)	Full Load Amps (total)	2.4 (9.6)			1.3 (5.2)			1 (4)		
Power Exhaust (2) 0.33 HP	Full Load Amps (total)	2.4 (4.8)			1.3 (2.6)			1 (2)		
Service Outlet 115V GFI (amps)		15			15			20		
Indoor Blower Motor	Horsepower	3	5	7.5	3	5	7.5	3	5	7.5
	Full Load Amps	10.6	16.7	24.2	4.8	7.6	11	3.9	6.1	9
[2] Maximum Overcurrent Protection	Unit Only	70	80	100	35	40	45	25	30	35
	With (2) 0.33 HP Power Exhaust	80	90	100	35	40	50	30	30	40
[3] Minimum Circuit Ampacity	Unit Only	64	71	80	31	34	38	24	27	30
	With (2) 0.33 HP Power Exhaust	68	75	85	34	37	41	26	29	32

NOTE - All units have a minimum Short Circuit Current Rating (SCCR) of 5000 amps.
[1] Extremes of operating range are plus and minus 10% of line voltage.
[2] HACR type breaker or fuse.
[3] Refer to National or Canadian Electrical Code manual to determine wire, fuse and disconnect size requirements.
[4] Factory installed circuit breaker not available.

KGA210H4

[1] Voltage - 60hz		208/230V - 3 Ph			460V - 3 Ph			575V - 3 Ph		
Compressor 1	Rated Load Amps	15.6			7.8			5.8		
	Locked Rotor Amps	110			52			38.9		
Compressor 2	Rated Load Amps	15.6			7.8			5.8		
	Locked Rotor Amps	110			52			38.9		
Compressor 3	Rated Load Amps	19.6			8.2			6.6		
	Locked Rotor Amps	136			66.1			55.3		
Outdoor Fan Motors (6)	Full Load Amps (total)	2.4 (14.4)			1.3 (7.8)			1 (6)		
Power Exhaust (2) 0.33 HP	Full Load Amps (total)	2.4 (4.8)			1.3 (2.6)			1 (2)		
Service Outlet 115V GFI (amps)		15			15			20		
Indoor Blower Motor	Horsepower	3	5	7.5	3	5	7.5	3	5	7.5
	Full Load Amps	10.6	16.7	24.2	4.8	7.6	11	3.9	6.1	9
[2] Maximum Overcurrent Protection	Unit Only	100	100	110	45	45	50	35	35	40
	With (2) 0.33 HP Power Exhaust	100	110	110	45	50	50	35	40	45
[3] Minimum Circuit Ampacity	Unit Only	81	87	96	39	42	46	30	32	36
	With (2) 0.33 HP Power Exhaust	86	92	101	42	44	48	32	34	38

NOTE - All units have a minimum Short Circuit Current Rating (SCCR) of 5000 amps.
[1] Extremes of operating range are plus and minus 10% of line voltage.
[2] HACR type breaker or fuse.
[3] Refer to National or Canadian Electrical Code manual to determine wire, fuse and disconnect size requirements.

KGA240H4

[1] Voltage - 60hz		208/230V - 3 Ph			460V - 3 Ph			575V - 3 Ph		
Compressor 1	Rated Load Amps	13.2			6.3			4.9		
	Locked Rotor Amps	93			60			41		
Compressor 2	Rated Load Amps	13.2			6.3			4.9		
	Locked Rotor Amps	93			60			41		
Compressor 3	Rated Load Amps	13.2			6.3			4.9		
	Locked Rotor Amps	93			60			41		
Compressor 4	Rated Load Amps	13.2			6.3			4.9		
	Locked Rotor Amps	93			60			41		
Outdoor Fan Motors (6)	Full Load Amps (total)	2.4 (14.4)			1.3 (7.8)			1 (6)		
Power Exhaust (2) 0.33 HP	Full Load Amps (total)	2.4 (4.8)			1.3 (2.6)			1 (2)		
Service Outlet 115V GFI (amps)		15			15			20		
Indoor Blower Motor	Horsepower	5	7.5	10	5	7.5	10	5	7.5	10
	Full Load Amps	16.7	24.2	30.8	7.6	11	14	6.1	9	11
[2] Maximum Overcurrent Protection	Unit Only	100	110	125	50	50	60	35	45	50
	With (2) 0.33 HP Power Exhaust	100	125	125	50	60	60	40	45	50
[3] Minimum Circuit Ampacity	Unit Only	89	98	106	43	47	51	34	37	40
	With (2) 0.33 HP Power Exhaust	93	103	111	46	50	54	36	39	42

NOTE - All units have a minimum Short Circuit Current Rating (SCCR) of 5000 amps.
[1] Extremes of operating range are plus and minus 10% of line voltage.
[2] HACR type breaker or fuse.
[3] Refer to National or Canadian Electrical Code manual to determine wire, fuse and disconnect size requirements.
[4] Factory installed circuit breaker not available.

ELECTRICAL ACCESSORIES

DISCONNECTS - STANDARD EFFICIENCY

Voltage	208V	240V	208V	240V	208V	240V	480V	480V	480V	600V	600V	600V
Model No.	KGA180S											
Blower Motor HP	3		5		7.5		3	5	7.5	3	5	7.5
Unit Only	54W91	54W91	54W92	54W92	54W92	54W92	54W91	54W91	54W91	54W91	54W91	54W91
Unit w/ Power Exhaust	54W92	54W92	54W92	54W92	54W92	54W92	54W91	54W91	54W91	54W91	54W91	54W91
Model No.	KGB180S											
Blower Motor HP	3		5		7.5		3	5	7.5	3	5	7.5
Unit Only	54W91	54W91	54W91	54W91	54W91	54W91	54W91	54W91	54W91	54W91	54W91	54W91
Unit w/ Power Exhaust	54W91	54W91	54W91	54W91	54W92	54W92	54W91	54W91	54W91	54W91	54W91	54W91
Model No.	KGA/KGB210S											
Blower Motor HP	3		5		7.5		3	5	7.5	3	5	7.5
Unit Only	54W92	54W92	54W92	54W92	54W92	54W92	54W91	54W91	54W91	54W91	54W91	54W91
Unit w/ Power Exhaust	54W92	54W92	54W92	54W92	54W92	54W92	54W91	54W91	54W91	54W91	54W91	54W91
Model No.	KGA/KGB240S											
Blower Motor HP	5		7.5		10		5	7.5	10	5	7.5	10
Unit Only	54W92	54W92	54W92	54W92	54W92	54W92	54W91	54W91	54W91	54W91	54W91	54W91
Unit w/ Power Exhaust	54W92	54W92	54W92	54W92	54W92	54W92	54W91	54W91	54W91	54W91	54W91	54W91
Model No.	KGB300S											
Blower Motor HP	5		7.5		10		5	7.5	10	5	7.5	10
Unit Only	54W92	54W92	54W92	54W92	54W92	54W92	54W91	54W91	54W91	54W91	54W91	54W91
Unit w/ Power Exhaust	54W92	54W92	54W92	54W92	54W93	54W93	54W91	54W91	54W91	54W91	54W91	54W91

ELECTRICAL ACCESSORIES

DISCONNECTS - HIGH EFFICIENCY

Voltage	208V	240V	208V	240V	208V	240V	480V	480V	480V	600V	600V	600V
Model No.	KGA156H											
Blower Motor HP	2		3		5		2	3	5	2	3	5
Unit Only	54W91	54W91	54W91	54W91	54W91	54W91	54W91	54W91	54W91	54W91	54W91	54W91
Unit w/ Power Exhaust	54W91	54W91	54W91	54W91	54W91	54W91	54W91	54W91	54W91	54W91	54W91	54W91
Model No.	KGA180H											
Blower Motor HP	3		5		7.5		3	5	7.5	3	5	7.5
Unit Only	54W91	54W91	54W91	54W91	54W92	54W92	54W91	54W91	54W91	54W91	54W91	54W91
Unit w/ Power Exhaust	54W91	54W91	54W92	54W92	54W92	54W92	54W91	54W91	54W91	54W91	54W91	54W91
Model No.	KGA210H											
Blower Motor HP	3		5		7.5		3	5	7.5	3	5	7.5
Unit Only	54W92	54W92	54W92	54W92	54W92	54W92	54W91	54W91	54W91	54W91	54W91	54W91
Unit w/ Power Exhaust	54W92	54W92	54W92	54W92	54W92	54W92	54W91	54W91	54W91	54W91	54W91	54W91
Model No.	KGA240H											
Blower Motor HP	5		7.5		10		5	7.5	10	5	7.5	10
Unit Only	54W92	54W92	54W92	54W92	54W92	54W92	54W91	54W91	54W91	54W91	54W91	54W91
Unit w/ Power Exhaust	54W92	54W92	54W92	54W92	54W92	54W92	54W91	54W91	54W91	54W91	54W91	54W91

UNIT CLEARANCES

Unit With Economizer

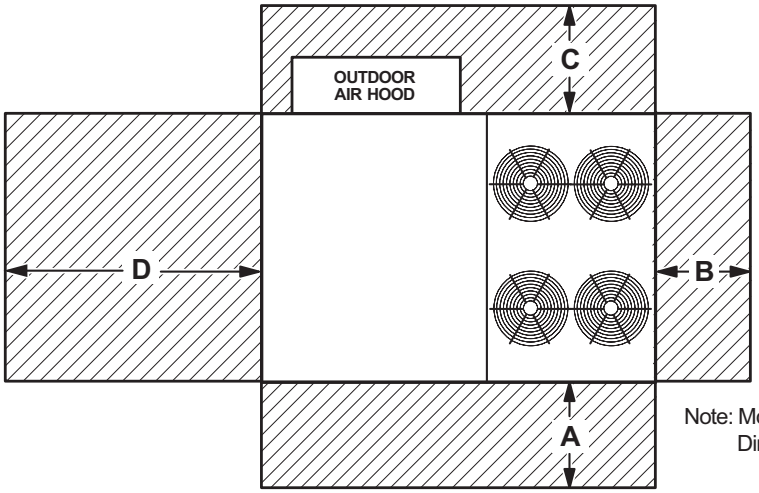

Note: Models with four outdoor fans shown.
Dimension clearances are for all sizes.

[1] Unit Clearance	A		B		C		D		Top Clearance
	in.	mm	in.	mm	in.	mm	in.	mm	
Service Clearance	60	1524	36	914	36	914	66	1676	Unobstructed
Clearance to Combustibles	36	914	1	25	1	25	1	25	
Minimum Operation Clearance	45	1143	36	914	36	914	41	1041	

NOTE - Entire perimeter of unit base requires support when elevated above the mounting surface.

[1] **Service Clearance** - Required for removal of serviceable parts.
Clearance to Combustibles - Required clearance to combustible material.
Minimum Operation Clearance - Required clearance for proper unit operation.

OUTDOOR SOUND DATA

Unit Model Number	Octave Band Linear Sound Power Levels dB, re 10^{-12} Watts - Center Frequency - Hz							[1] Sound Rating Number (SRN) (dBA)
	125	250	500	1000	2000	4000	8000	
156H, 180S, 210S	71	78	81	81	76	71	63	86
180H, 240S	80	83	87	88	84	80	71	93
210H, 240H, 300S	79	84	88	89	85	82	73	94

NOTE - The octave sound power data does not include tonal corrections.

[1] Sound Rating Number according to ARI Standard 370-2001 (includes pure tone penalty). “SRN” is the overall A-Weighted Sound Power Level, (LWA), dB (100 Hz to 10,000 Hz).

WEIGHT DATA

Model Number	Outdoor Coil	Net		Shipping		Outdoor Coil	Net		Shipping	
		lbs.	kg	lbs.	kg		lbs.	kg	lbs.	kg
156H Base Unit	Environ™	1935	878	2135	968	- - -	- - -	- - -	- - -	- - -
156H Max. Unit	Environ™	2205	1000	2405	1091	- - -	- - -	- - -	- - -	- - -
180H Base Unit	Environ™	2115	959	2315	1050	- - -	- - -	- - -	- - -	- - -
180H Max. Unit	Environ™	2400	1089	2600	1179	- - -	- - -	- - -	- - -	- - -
210H Base Unit	Environ™	2240	1016	2440	1107	- - -	- - -	- - -	- - -	- - -
210H Max. Unit	Environ™	2525	1145	2725	1236	- - -	- - -	- - -	- - -	- - -
240H Base Unit	Environ™	2325	1055	2525	1145	- - -	- - -	- - -	- - -	- - -
240H Max. Unit	Environ™	2610	1184	2810	1275	- - -	- - -	- - -	- - -	- - -
180S Base Unit	Environ™	1855	841	2055	932	Fin/Tube	1920	870	2120	962
180S Max. Unit	Environ™	2175	987	2375	1077	Fin/Tube	2240	1017	2440	1106
210S Base Unit	Environ™	1965	891	2165	982	Fin/Tube	2030	920	2230	1012
210S Max. Unit	Environ™	2295	1041	2495	1132	Fin/Tube	2360	1071	2560	1161
240S Base Unit	Environ™	2180	989	2380	1080	Fin/Tube	2285	1037	2485	1128
240S Max. Unit	Environ™	2510	1139	2710	1229	Fin/Tube	2615	1186	2815	1277
300S Base Unit	Environ™	2450	1111	2650	1202	Fin/Tube	2515	1141	2715	1232
300S Max. Unit	Environ™	2740	1243	2940	1334	Fin/Tube	2805	1272	3005	1364

NOTE - Max. Unit is the unit with ALL INTERNAL OPTIONS Installed. (Economizer, Standard Static Power Exhaust Fans, Controls, etc.). Does not include accessories EXTERNAL to unit.

OPTIONS / ACCESSORIES

Description	Shipping Weight	
	lbs.	kg
ECONOMIZER / OUTDOOR AIR / EXHAUST		
Economizer		
Economizer Dampers	102	46
Barometric Relief Dampers (downflow)	30	14
Barometric Relief Dampers (horizontal)	20	9
Outdoor Air Dampers		
Outdoor Air Damper Section (downflow) - Automatic	52	24
Outdoor Air Damper Section (downflow) - Manual	49	22
Outdoor Air Damper Hood (downflow)	65	29
Power Exhaust	62	28
GAS HEAT EXCHANGER (NET WEIGHT)		
Medium Heat (adder over standard heat)	18	8
High Heat (adder over standard heat)	64	29
HUMIDITROL® DEHUMIDIFICATION SYSTEM		
Humiditrol® Dehumidification Option (Net Weight)	50	23
MSAV® MULTI-STAGE AIR VOLUME SUPPLY AIR BLOWER OPTION		
Variable Frequency Drive (VFD) and associated components	10	5
ROOF CURBS		
Hybrid Roof Curb, Downflow		
8 in. height	75	34
14 in. height	105	48
18 in. height	125	57
24 in. height	155	70
Adjustable Pitch Curb, Downflow		
14 in. height	262	119
Horizontal Roof Curbs, Standard		
26 in. height	470	213
37 in. height	505	229
30 in. height	575	261
41 in. height	610	277
CEILING DIFFUSERS		
Step-Down		
RTD11-185S	168	76
RTD11-275S	238	108
Flush		
FD11-185S	168	76
FD11-275S	238	108
Transitions		
C1DIFF33C-1	80	36
C1DIFF34C-1	75	34
PACKAGING		
LTL Packaging (less than truck load)	310	141

CORNER WEIGHTS									CENTER OF GRAVITY			
Model No.	AA		BB		CC		DD		EE		FF	
	lbs.	kg	lbs.	kg	lbs.	kg	lbs.	kg	in.	mm	in.	mm
KGA156H Base Unit (Environ™ Coil)	473	215	367	167	483	219	612	278	47 1/4	1200	39 1/2	1003
KGA156H Max. Unit (Environ™ Coil)	586	266	447	203	510	232	663	301	46 3/4	1187	42 3/4	1086
KGB180S Base Unit (Environ™ Coil)	423	192	365	166	495	225	574	260	50	1270	38 3/4	984
KGB180S Max. Unit (Environ™ Coil)	542	246	441	200	536	243	657	298	48 1/2	1232	41	1041
KGB180S Base Unit (Fin/Tube Coil)	426	193	395	179	525	239	577	261	49	1245	39 3/4	1010
KGB180S Max. Unit (Fin/Tube Coil)	544	247	471	213	566	256	659	299	48 1/4	1226	42 3/4	1086
KGB210S Base Unit (Environ™ Coil)	462	210	387	176	509	231	608	276	49 1/4	1251	39 1/4	997
KGB210S Max. Unit (Environ™ Coil)	587	266	465	211	550	249	694	315	47 3/4	1213	41 3/4	1060
KGB210S Base Unit (Fin/Tube Coil)	465	211	417	189	539	245	611	277	49	1245	39 3/4	1010
KGB210S Max. Unit (Fin/Tube Coil)	589	267	495	224	580	262	696	316	48 1/4	1226	42 3/4	1086

Base Unit - The unit with NO INTERNAL OPTIONS.

Max. Unit - The unit with ALL INTERNAL OPTIONS Installed. (Economizer, Standard Static Power Exhaust Fans, Controls, etc.). Does not include accessories external to unit.

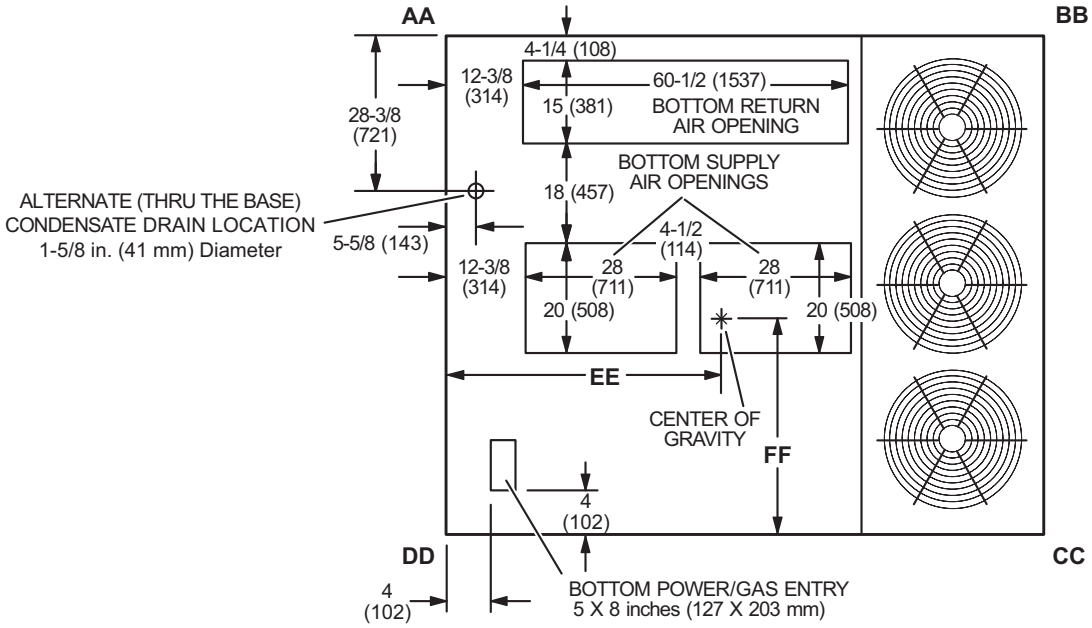

TOP VIEW

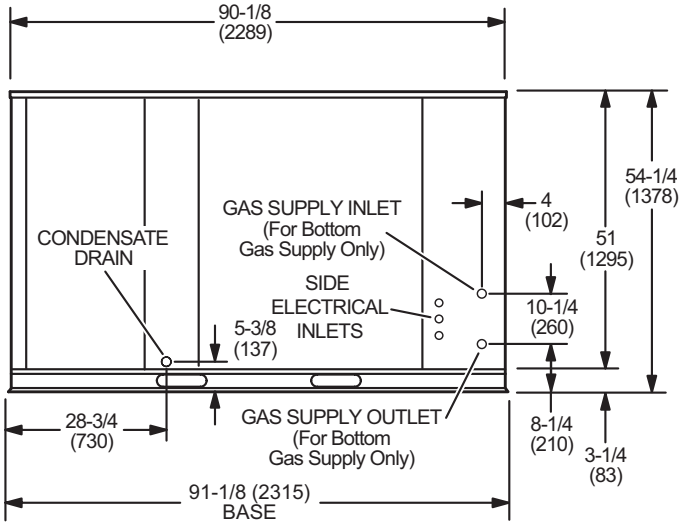

END VIEW

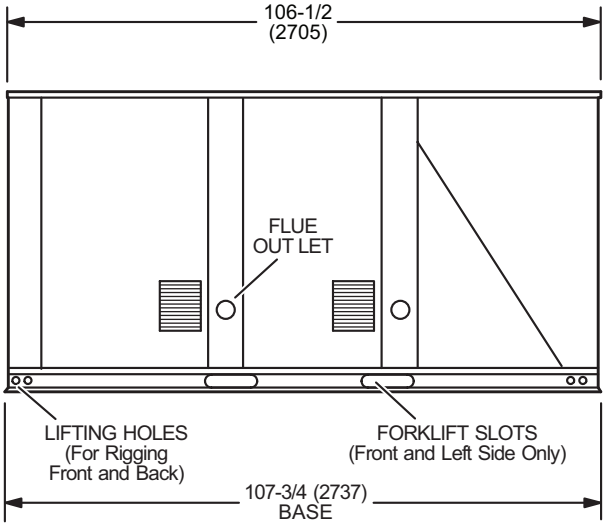

SIDE VIEW

CORNER WEIGHTS									CENTER OF GRAVITY			
Model No.	AA		BB		CC		DD		EE		FF	
	lbs.	kg	lbs.	kg	lbs.	kg	lbs.	kg	in.	mm	in.	mm
KGA180H Base Unit (Environ™ Coil)	487	221	423	192	569	259	636	289	50-3/4	1289	39-1/4	997
KGA180H Max. Unit (Environ™ Coil)	597	272	505	229	599	272	699	318	49-3/4	1264	42	1067
KGB240S Base Unit (Environ™ Coil)	464	210	421	191	616	279	679	308	51-1/4	1302	37	940
KGB240S Max. Unit (Environ™ Coil)	574	260	506	230	669	303	759	344	50-1/2	1283	39-1/4	997
KGB240S Base Unit (Fin/Tube Coil)	464	210	474	215	669	302	679	307	53-1/4	1353	39-1/2	1003
KGB240S Max. Unit (Fin/Tube Coil)	574	259	558	254	722	327	759	343	52	1321	42	1067

Base Unit - The unit with NO INTERNAL OPTIONS.

Max. Unit - The unit with ALL INTERNAL OPTIONS Installed. (Economizer, Standard Static Power Exhaust Fans, Controls, etc.). Does not include accessories external to unit.

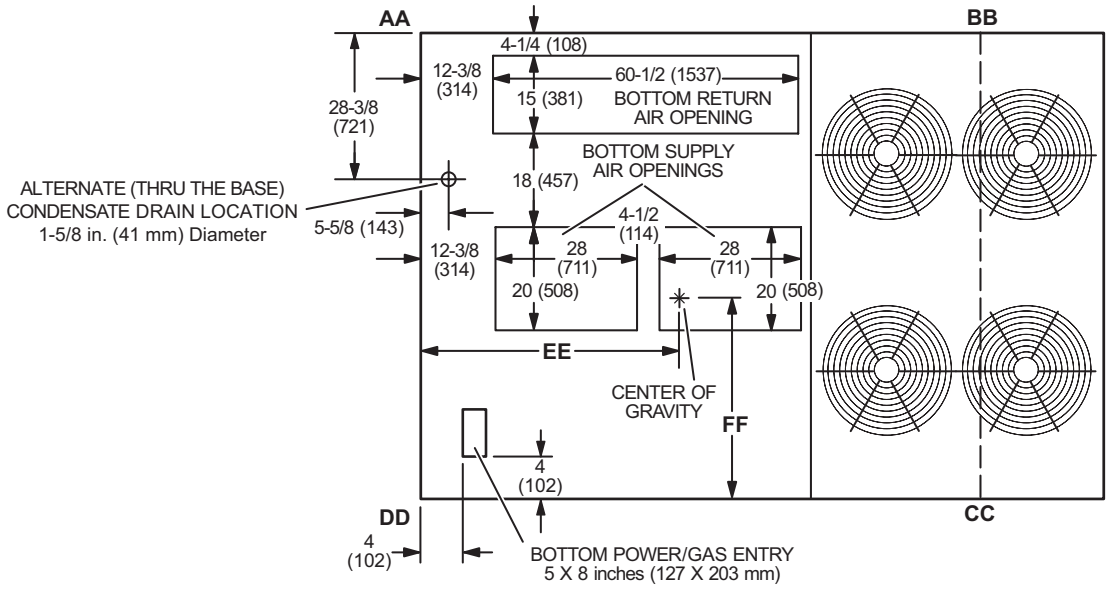

TOP VIEW

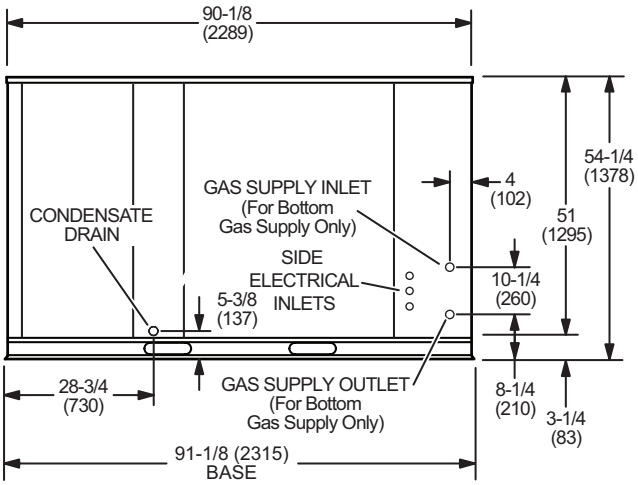

END VIEW

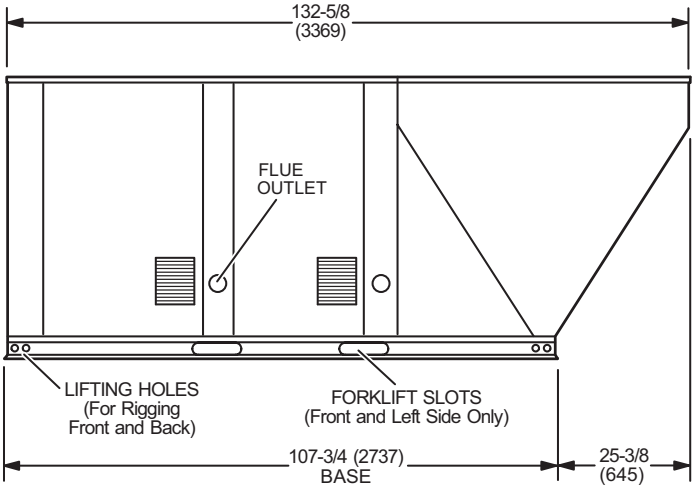

SIDE VIEW

CORNER WEIGHTS									CENTER OF GRAVITY			
Model No.	AA		BB		CC		DD		EE		FF	
	lbs.	kg	lbs.	kg	lbs.	kg	lbs.	kg	in.	mm	in.	mm
KGA210H Base Unit (Environ™ Coil)	497	226	468	213	626	284	649	295	52 3/4	1340	39 1/4	997
KGA210H Max. Unit (Environ™ Coil)	607	276	553	252	655	298	710	323	51 1/2	1308	42	1067
KGA240H Base Unit (Environ™ Coil)	507	230	481	219	660	300	677	308	53	1346	38 3/4	984
KGA240H Max. Unit (Environ™ Coil)	617	280	567	258	688	313	738	335	52	1321	41 1/2	1054
KGB300S Base Unit (Environ™ Coil)	511	232	505	229	714	324	722	327	53 1/2	1359	37 3/4	959
KGB300S Max. Unit (Environ™ Coil)	624	283	594	269	743	337	780	354	52 1/2	1334	40 1/2	1029
KGB300S Base Unit (Fin/Tube Coil)	535	243	501	228	716	325	764	346	53 1/2	1359	37 3/4	959
KGB300S Max. Unit (Fin/Tube Coil)	653	296	595	269	743	337	816	370	52 1/2	1334	40 1/2	1029

Base Unit - The unit with NO INTERNAL OPTIONS.

Max. Unit - The unit with ALL INTERNAL OPTIONS Installed. (Economizer, Standard Static Power Exhaust Fans, Controls, etc.). Does not include accessories external to unit.

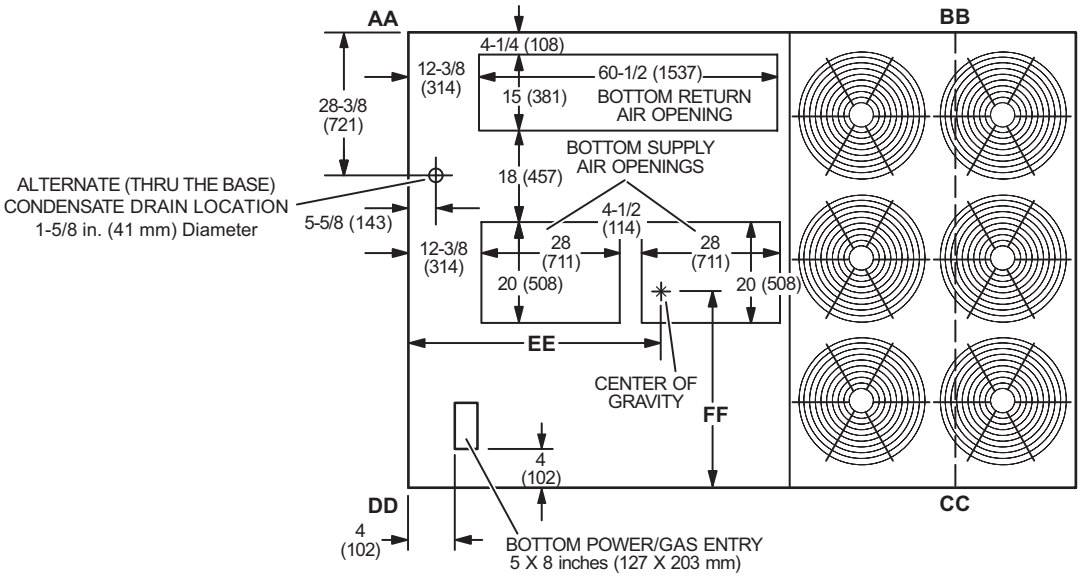

TOP VIEW

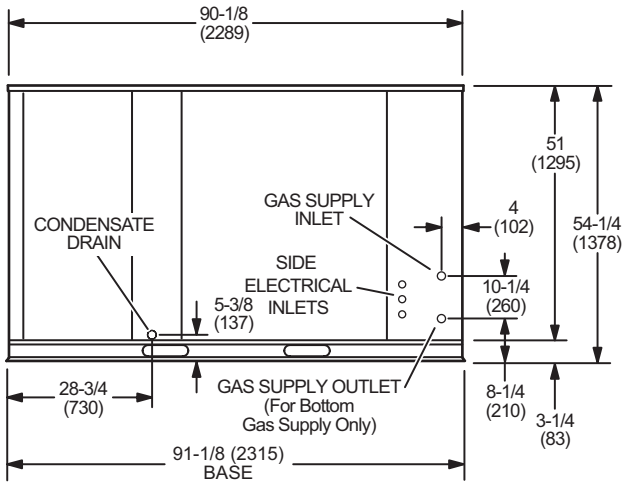

END VIEW

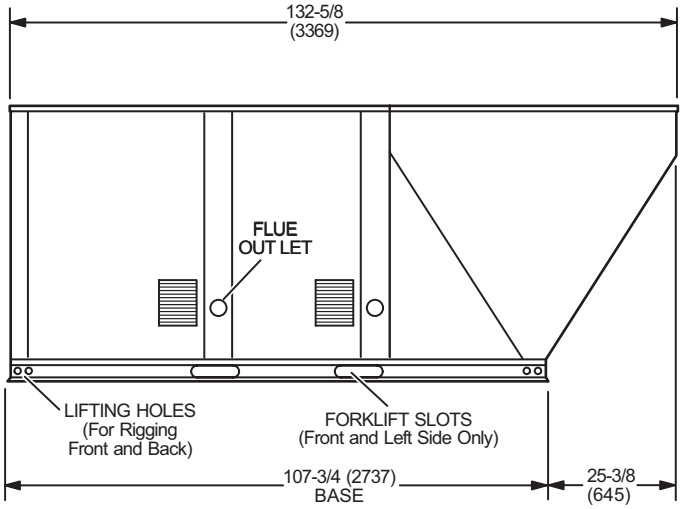

SIDE VIEW

OUTDOOR AIR HOOD DETAIL

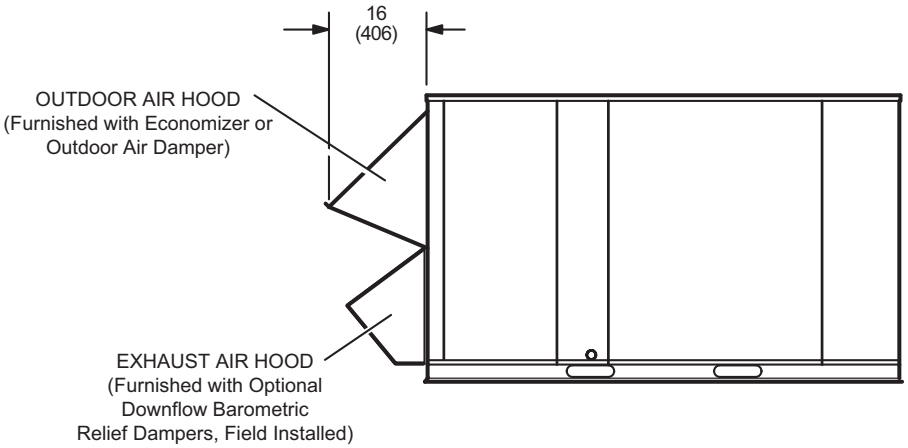

OPTIONAL HORIZONTAL BAROMETRIC RELIEF DAMPERS WITH HOOD

(Field installed in horizontal return air duct adjacent to unit)

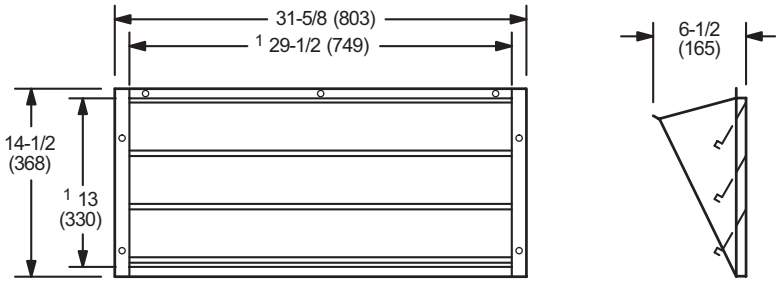

FRONT VIEW **SIDE VIEW**

NOTE - Two furnished per order no.
[1] NOTE - Opening size required in return air duct.

HYBRID ROOF CURBS - DOUBLE DUCT OPENING

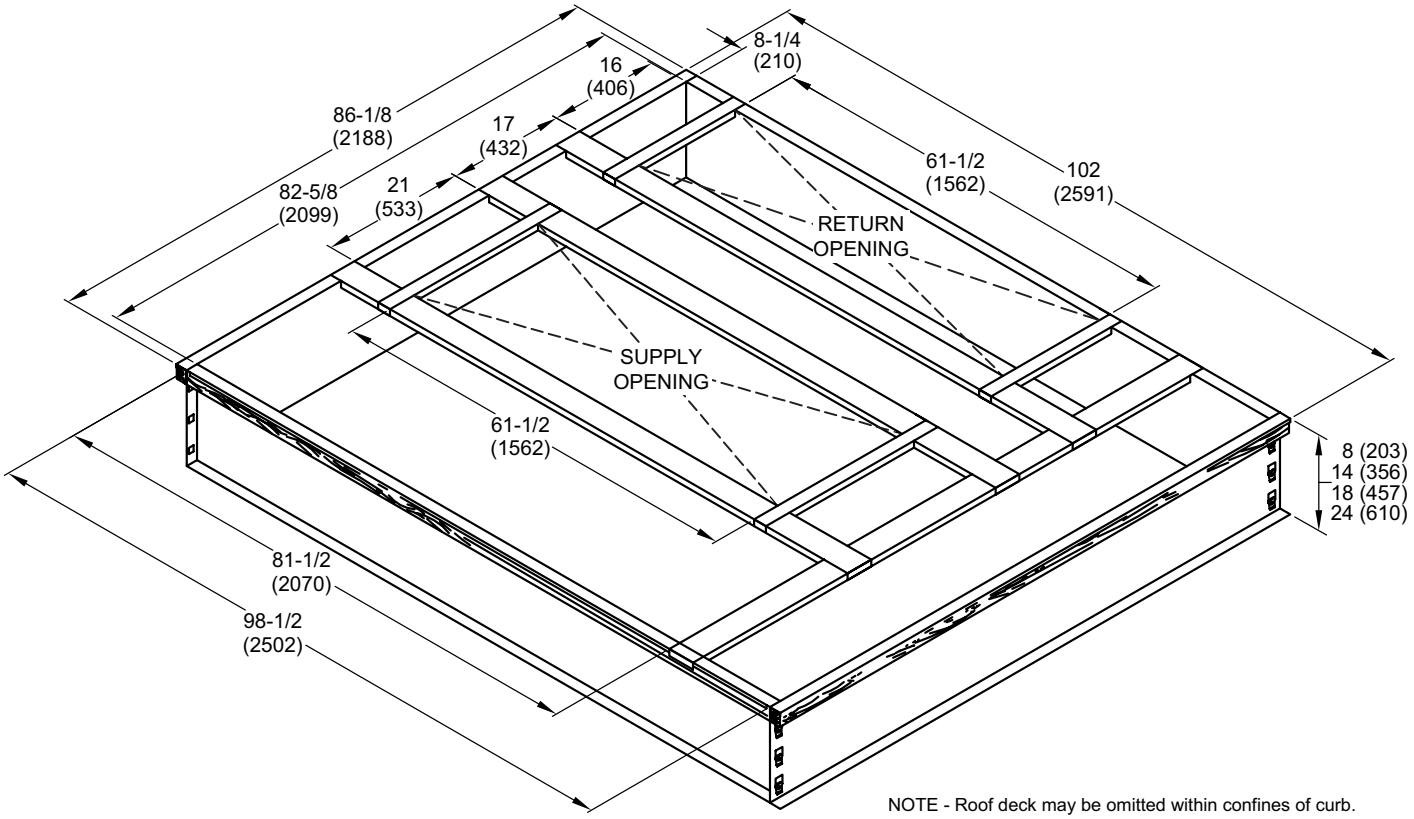

NOTE - Roof deck may be omitted within confines of curb.

TYPICAL FLASHING DETAIL FOR ROOF CURB

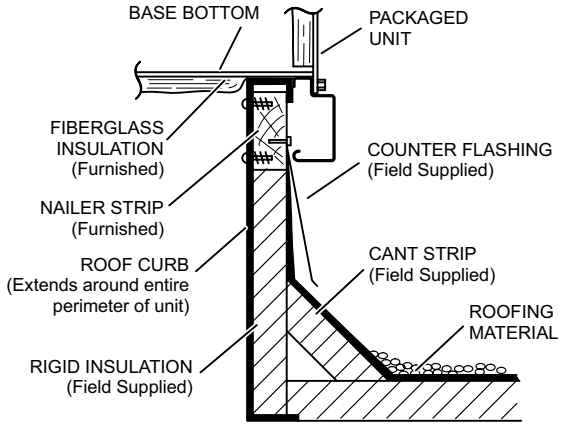

DETAIL ROOF CURB

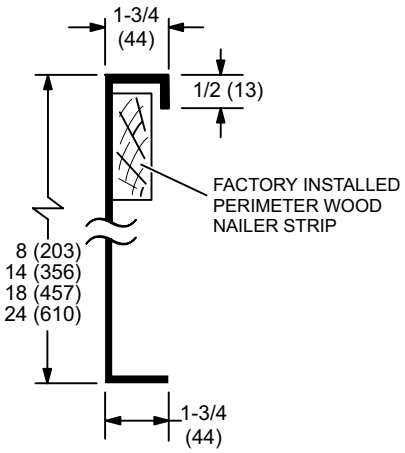

ADJUSTABLE PITCH CURB - DOUBLE DUCT OPENING

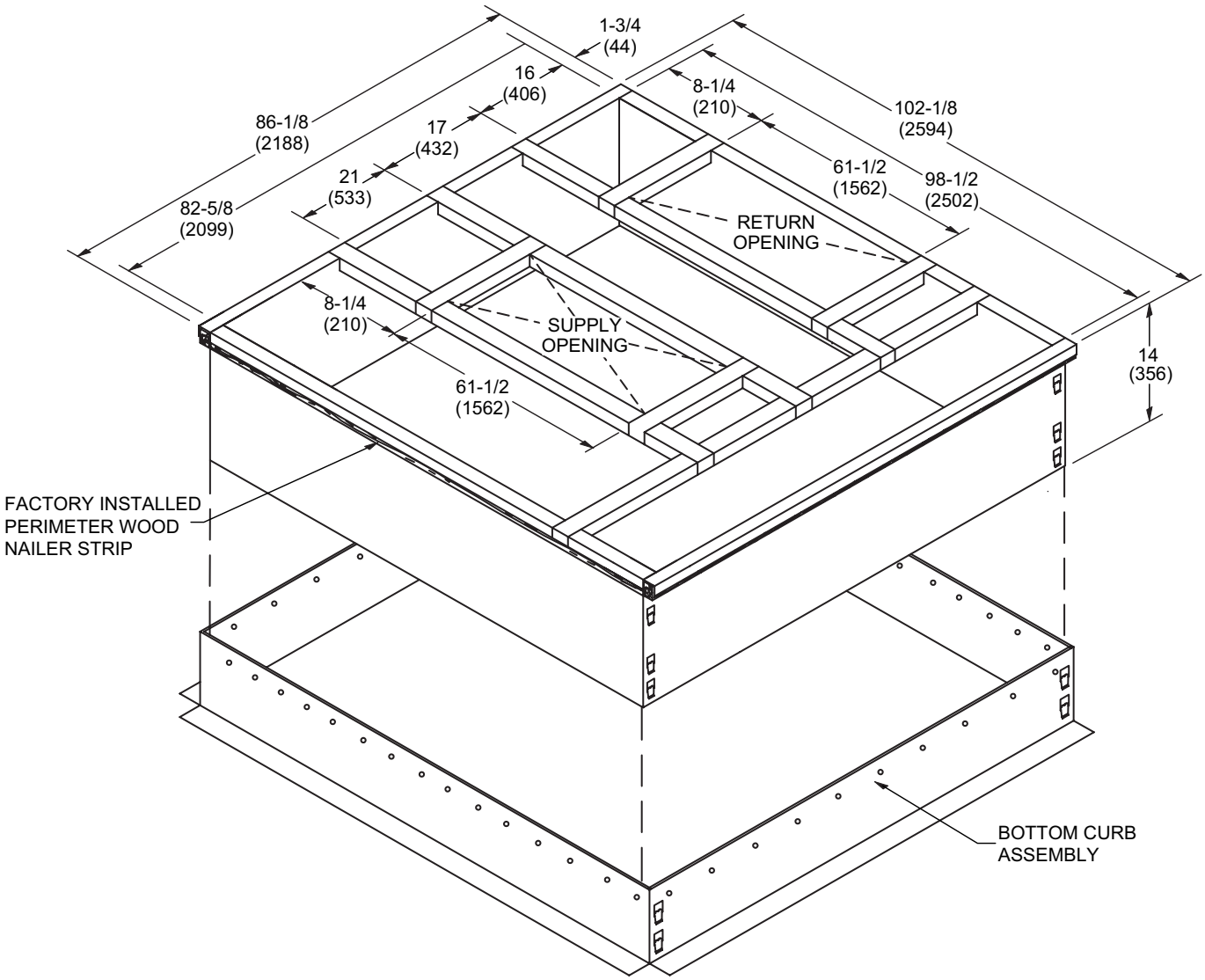

NOTE - Maximum slope pitch is 3/4 in. per 1 foot (19 mm per 305 mm) in any one direction.

TYPICAL FLASHING DETAIL FOR ROOF CURB

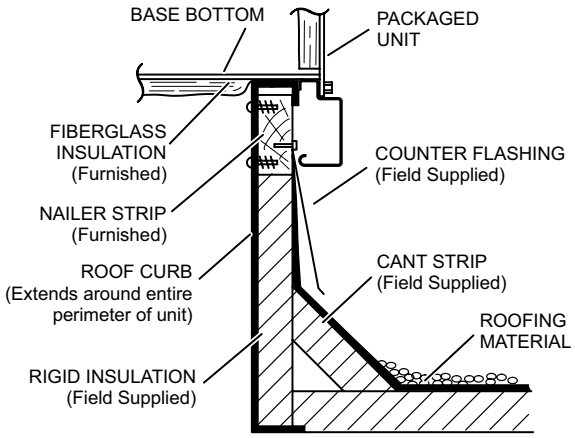

DETAIL ROOF CURB

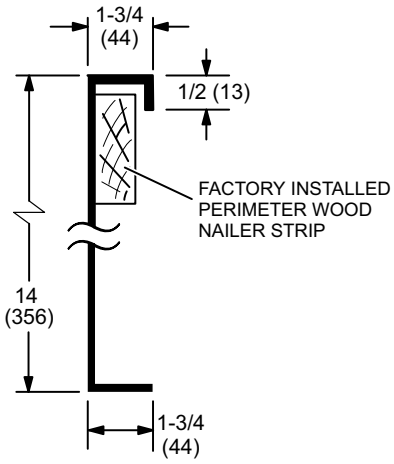

ROOF CURBS WITH SUPPLY & RETURN AIR TRANSITIONS FOR CEILING DIFFUSERS

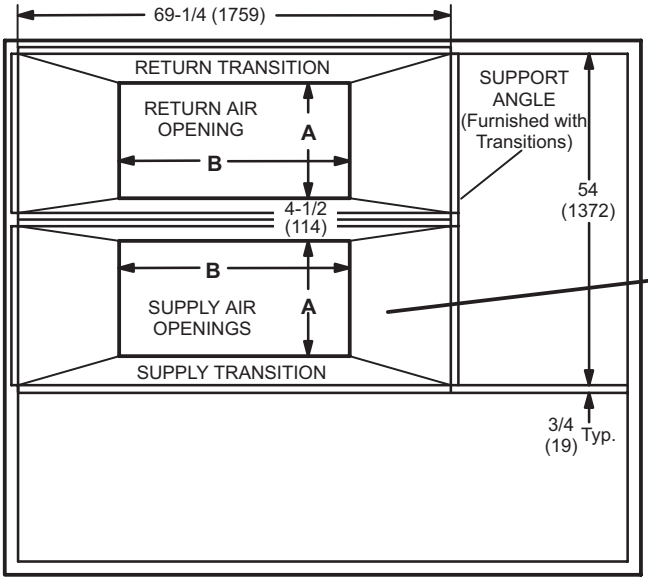

TOP VIEW

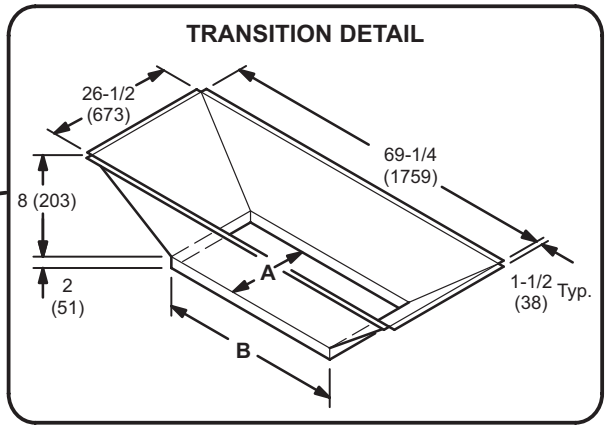

TRANSITION OPENING SIZES

Model Number	A		B	
	inch	mm	inch	mm
C1DIFF33C-1	18	457	36	914
C1DIFF34C-1	24	610	48	1219

HORIZONTAL ROOF CURBS − Requires Optional Horizontal Return Air Panel Kit

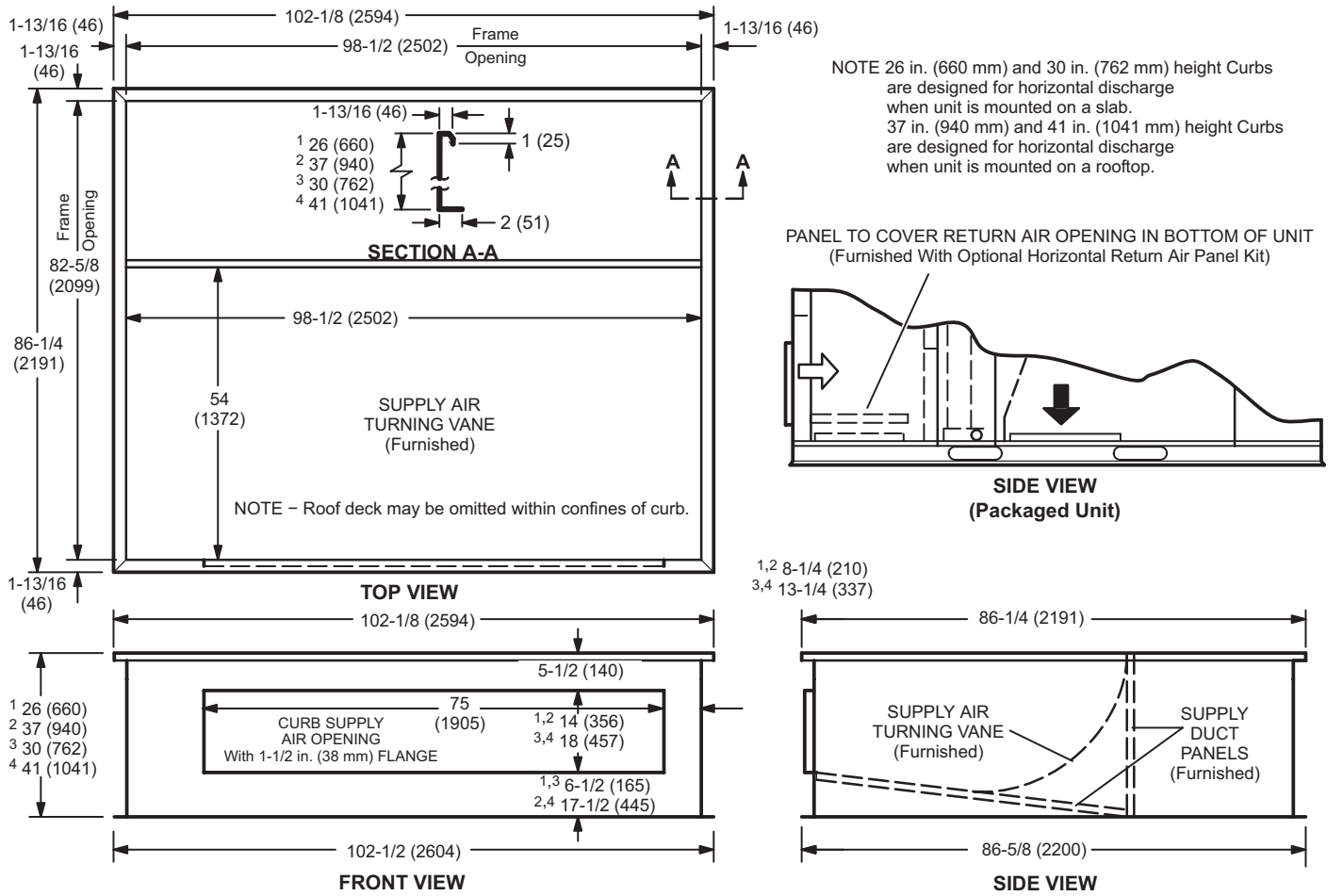

1 Slab Applications 2 Rooftop Applications 3 Slab Applications (used with 300) 4 Rooftop Applications (used with 300)

HORIZONTAL SUPPLY AND RETURN AIR OPENINGS WITH HORIZONTAL ROOF CURB

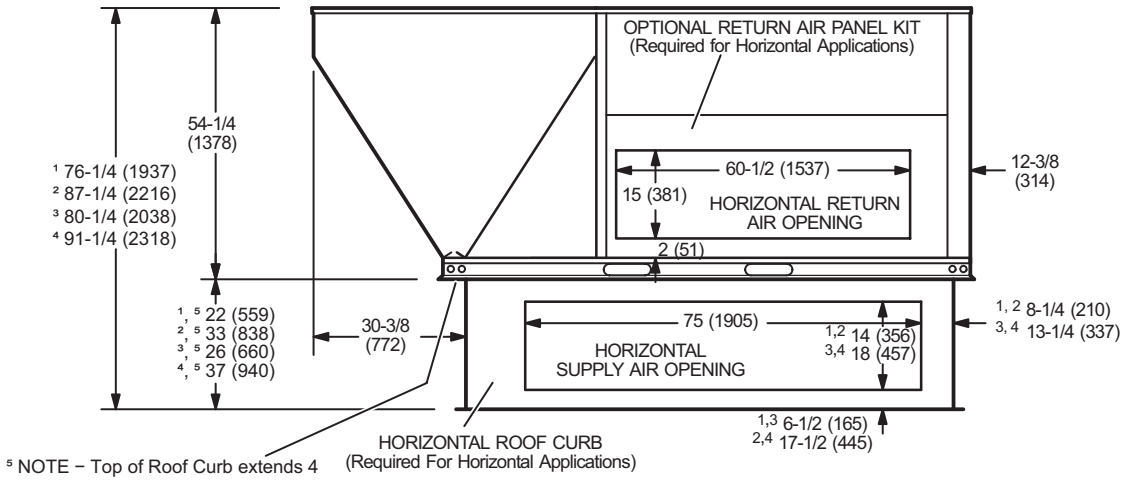

5 NOTE − Top of Roof Curb extends 4 inch (102 mm) inside bottom of unit base. See Typical flashing detail.

1 Slab Applications
2 Rooftop Applications
3 Slab Applications (used with 300 Models Only)
4 Rooftop Applications (used with 300 Models Only)

COMBINATION CEILING SUPPLY AND RETURN DIFFUSERS

STEP-DOWN CEILING DIFFUSER

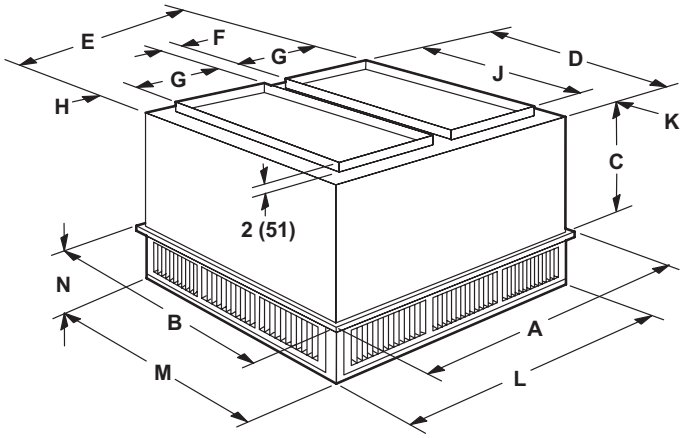

FLUSH CEILING DIFFUSER

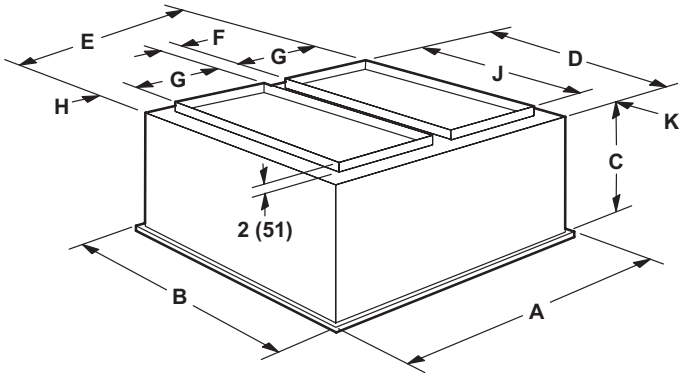

Model Number		RTD11-185S	RTD11-275
A	in.	47-5/8	59-5/8
	mm	1210	1514
B	in.	47-5/8	59-5/8
	mm	1210	1514
C	in.	24-5/8	30-5/8
	mm	625	778
D	in.	45-1/2	57-1/2
	mm	1156	1461
E	in.	45-1/2	57-1/2
	mm	1156	1461
F	in.	4-1/2	4-1/2
	mm	114	114
G	in.	18	24
	mm	457	610
H	in.	2-1/2	2-1/2
	mm	64	64
J	in.	36	48
	mm	914	1219
K	in.	4-3/4	4-3/4
	mm	121	121
L	in.	45-1/2	57-1/2
	mm	1156	1461
M	in.	45-1/2	57-1/2
	mm	1156	1461
N	in.	10-1/8	11-1/8
	mm	257	283
Duct Size	in.	18 x 36	24 x 48
	mm	457 x 914	610 x 1219

Model Number		FD11-185S	FD11-275
A	in.	47-5/8	59-5/8
	mm	1210	1514
B	in.	47-5/8	59-5/8
	mm	1210	1514
C	in.	29-1/4	35-1/4
	mm	743	895
D	in.	45	57
	mm	1143	1148
E	in.	45	57
	mm	1143	1448
F	in.	4-1/2	4-1/2
	mm	114	114
G	in.	18	24
	mm	457	610
H	in.	2-1/4	2-1/4
	mm	57	57
J	in.	36	48
	mm	914	1219
K	in.	4-1/2	4-1/2
	mm	114	114
Duct Size	in.	18 x 36	24 x 48
	mm	457 x 914	610 x 1219

REVISIONS

Sections	Description of Change
Options/Accessories	High Performance Economizer updated.

Visit us at www.Lennox.com

For the latest technical information, www.LennoxCommercial.com

Contact us at 1-800-4-LENNOX

NOTE - Due to Lennox' ongoing commitment to quality, Specifications, Ratings and Dimensions subject to change without notice and without incurring liability.
Improper installation, adjustment, alteration, service or maintenance can cause property damage or personal injury.
Installation and service must be performed by a qualified installer and servicing agency.

©2022 Lennox Industries, Inc.