LENNOX®

ENGINEERING DATA

GH19 PLUS SERIES HORIZONTAL GAS FURNACES

***80.0% A.F.U.E.**

50,000 to 125,000 Btuh Input

Add-On Cooling — 1-1/2 thru 5 Nominal Tons

*Isolated Combustion System Rating For Non-Weatherized Furnaces

GH19

Bulletin #480183
September 1992
Supersedes
March 1992

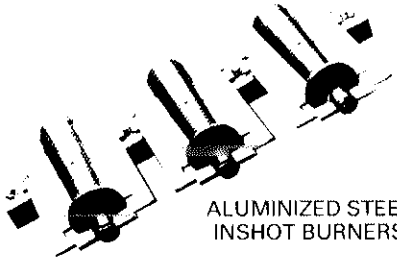

ALUMINIZED STEEL INSHOT BURNERS

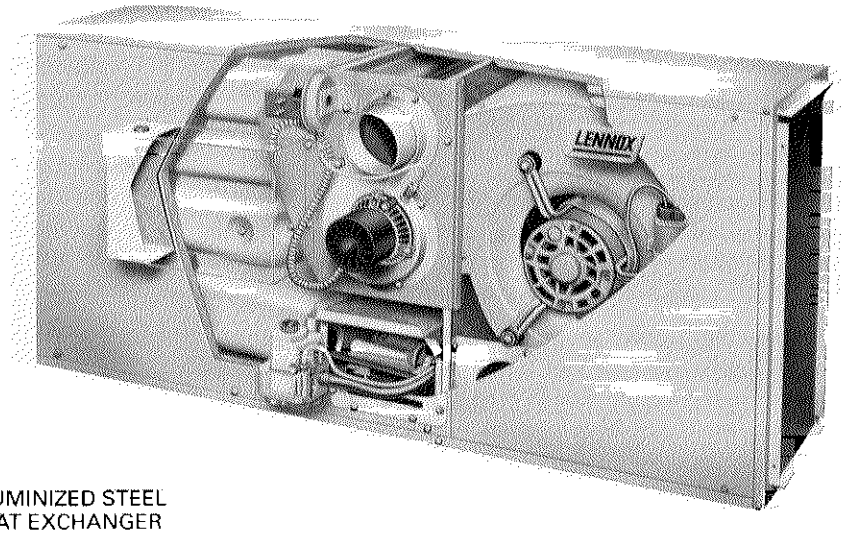

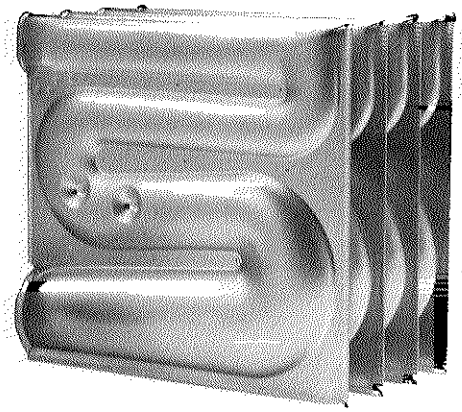

ALUMINIZED STEEL HEAT EXCHANGER

Typical Applications

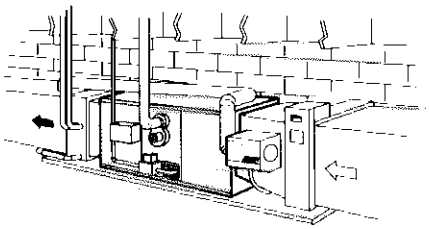

Crawl Space Installation
With cooling coil, electronic air cleaner and automatic humidifier

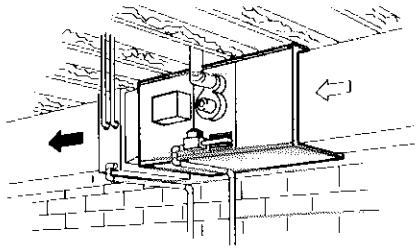

Basement Installation
With cooling coil

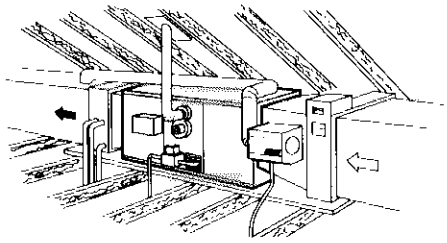

Attic Installation
With cooling coil, electronic air cleaner and automatic humidifier

Applications— GH19 series horizontal gas furnaces include six models with input capacities of 50,000, 75,000, 100,000, and 125,000 Btuh and energy efficiencies (AFUE) of 80.0%. All models are available with either natural gas or LPG. Units can be installed in a basement, on a slab in a crawlspace or suspended from a ceiling in a utility or furnace room. Lennox direct expansion evaporator cooling coil, electronic air cleaner and automatic humidifier can easily be added for a complete all-season Total Comfort system. Each unit is factory test operated.

Approvals— Units are design certified by A.G.A. Laboratories and ratings are certified by GAMA. Units have been rated and tested according to DOE test procedures and FTC labeling regulations. GH19 models meet California Nitrogen Oxides (NO_x) Standards and California Seasonal Efficiency requirements. Units are certified for conventional or horizontal venting.

Equipment Warranty — Aluminized Steel Heat Exchangers have a limited warranty for twenty years. Solid-state ignition modules have a limited warranty for three years. All other components have a limited warranty for one year. Refer to the Lennox Equipment Limited Warranty certificate included with the equipment for details.

Durable Aluminized Steel Heat Exchanger— Clamshell type heat exchanger is constructed of heavy gauge aluminized steel and is designed for normal expansion and contraction without metal fatigue. Crimped seam design and construction provides for long service life, maximum efficiency and minimum resistance to air flow.

Aluminized Steel Inshot Burners — Single port inshot type burners provide trouble free operation. Burner venturi mixes gas and air in correct proportion for proper combustion. Entire burner assembly or individual burners can easily be removed for service.

Electronic Pilot Ignition — Solid-state electronic direct spark igniter provides positive ignition of pilot burner on each operating cycle. Pilot gas is ignited and burns during each running cycle of the furnace. Main burners and pilot gas are extinguished during the off cycle. This system permits main gas valve to open only when the pilot burner is proven to be lit. Should a loss of flame occur, the main valve closes, shutting down the unit. Pilot is a fully automatic operation on demand for heat.

NOTE Specifications, Ratings and Dimensions subject to change without notice.

©1992 Lennox Industries Inc.

FEATURES

Automatic Gas Control — 24 volt combination gas control valve combines automatic safety pilot, pilot filtration, automatic electric valve (dual) with manual set knob (off-on) and gas pressure regulation into compact combination control. Dual valve design provides double assurance of 100% close off of gas to the pilot and main burners on each heating cycle.

Rugged Cabinet — Constructed of heavy gauge cold rolled steel with a durable baked-on enamel paint finish. Blower section is completely lined with black mat faced fiberglass insulation. Heating section is completely lined with foil faced fiberglass insulation. Flanges on supply and return air openings permit easy duct connection. Large removeable blower access panel provides complete service to blower compartment. Blower access panel is equipped with knob for easy removal. Safety interlock switch automatically shuts off power to the unit when blower compartment access panel is removed.

Air Flow Direction — Units are shipped for left hand air discharge. For applications requiring a change in supply air direction, simply turn unit over, top for bottom and relocate limit control wiring, burner plate and flame rollout switch.

Induced Draft Blower — Factory installed induced draft blower pre-purges heat exchanger and safely vents combustion products. Centrifugal pressure switch proves blower operation before allowing main gas valve to open. Factory installed on unit cabinet. Operates only during heating cycle. Sensing tube is factory installed from pressure switch to induced draft blower.

Flame Rollout Switch — Manual reset switch is furnished as standard and is factory installed on the burner assembly. Switch prevents unit operation in the event combustion products passage through the flueway is reduced or blocked.

Solid-State Blower Control — Furnished and factory installed in the wiring junction/control box. Solid-state board contains all necessary controls and relays to operate induced draft blower and unit blower. Control consists of adjustable blower timed-off delay (60 to 150 seconds) and fixed blower timed-on delay (30 seconds). For air-conditioning applications, blower is automatically energized on thermostat demand for cooling. Provisions have been made for additional wiring connections required for power humidifiers or electronic air cleaners. Also included is a low voltage terminal strip for thermostat connections.

A.G.A. INSTALLATION CLEARANCES

Sides	6 inches
Rear	6 inches
Top	2 inches
*Front	*6 inches
•Floor	•Combustible
**Flue	**6 inches
***Flue	***1 inch

•Areas adjacent to the combustion air opening must be covered with fireproof board or sheet metal extending a minimum of 12 inches from the furnace.
*Measured from the induced draft motor.
**This is clearance to all flue pipes except type "B".
***Type "B" vent clearances as listed by U.L.
NOTE—Air for combustion and ventilation must conform to the methods outlined in American National Standard (ANSI Z223.1) National Fuel Gas Code.
NOTE A clearance of at least 30 inches should be provided at the front of the unit for combustion air and servicing.

Wiring Junction/Control Box — Power supply and thermostat connections are made at the wiring junction box. Box contains solid-state blower control board, transformer and ignition control.

Transformer — 24 volt control transformer is furnished as standard equipment and is factory installed in wiring junction box. Blower control board has a fuse to protect the transformer.

Limit Control — Factory installed in heat exchanger compartment. Limit control gives protection against abnormal operating conditions. Automatic reset. Operates in conjunction with blower control board. If limit trips, blower operates automatically.

Powerful Blowers — Units are equipped with quiet multi-speed direct drive blowers. Each blower assembly is statically and dynamically balanced. Multiple-speed leadless motor is resiliently mounted. A choice of blower speeds is available on each blower. See blower performance charts.

Air Filter (Not Furnished) — Air filter is optional equipment and must be ordered extra. An optional filter and filter rack kit is available. See below and Specifications table.

OPTIONAL ACCESSORIES (Must Be Ordered Extra)

Filter Rack Kit (Optional) — Must be ordered extra. Media is washable or vacuum cleanable. See Specifications table for order no. and filter cut size. Filter and filter retainer field installs in blower compartment. See dimension drawing.

LPG Conversion Kit (Optional) — For LPG models a conversion kit is required for field changeover from natural gas. Kit is not furnished and must be ordered extra. See Specifications table for order number.

Thermostat (Optional) — Heating thermostat is not furnished and must be ordered extra. See Thermostats bulletin in Accessories Section. For all-season applications, heating and cooling thermostat is available with the condensing unit.

HIGH ALTITUDE DERATE

A.G.A. certified units must be derated when installed at an elevation of more than 2000 feet above sea level. If unit is installed at an altitude higher than 2000 feet, the unit must be derated 4% for every 1000 feet above sea level. Thus, at an altitude of 4000 feet, the unit would require a derate of 16%.

NOTE — This is the only permissible derate for the units.

SPECIFICATIONS

Model No.		GH19P3-50	GH19P3-75	GH19P4-75	GH19P3/4-100	GH19P4/5-100	GH19P4/5-125
Input Btuh		50,000	75,000	75,000	100,000	100,000	125,000
Output Btuh		40,000	60,000	60,000	80,000	80,000	100,000
*A.F.U.E.		80.0%	80.0%	80.0%	80.0%	80.0%	80.0%
California Seasonal Efficiency		76.0%	75.5%	72.0%	75.0%	73.7%	74.0%
Flue size connection (in.) diameter		4	4	4	4	4	4
Temperature rise range (°F)		40–70	40–70	30–60	40–70	30–60	40–70
High static certified by A.G.A. (in wg.)		.50	.50	.80	.50	.50	.50
Gas Piping Size I.P.S. (in.)	Natural	1/2	1/2	1/2	1/2	1/2	1/2
	**LPG	1/2	1/2	1/2	1/2	1/2	1/2
Blower wheel nominal dia. x width (in.)		10 x 8	10 x 8	12 x 8	10 x 9	12 x 9	12 x 12
Blower motor hp		1/3	1/3	1/2	1/3	3/4	1/2
Tons of cooling that can be added		1-1/2 — 3	1-1/2 — 3	2 — 4	3 — 4	3 — 5	3 — 5
Shipping weight (lbs.) 1 Package		144	153	156	175	183	197
Electrical characteristics		115 volts — 60 hertz — 1 phase (less than 12 amps) All models					
**LPG kit (optional)		**85H86** (All Models)					
•Filter Rack Kit (optional)	Order No.	**85H87**			**85H88**		**85H89**
	Media cut size (in.)	(1) 23 x 13 x 1/2			(1) 23 x 16-1/2 x 1/2		(1) 23 x 20 x 1/2

• Field installed
* Annual Fuel Utilization Efficiency based on D.O.E. test procedures and according to F.T.C. labeling requirements. Isolated combustion system rating for non weatherized furnaces.
**LPG kit must be ordered extra for field changeover.

BLOWER DATA

GH19P3-50 BLOWER PERFORMANCE

External Static Pressure (in. wg)	Air Volume @ Various Speeds		
	High	Medium	Low
.10	1420	1225	955
.20	1365	1185	935
.30	1305	1125	895
.40	1230	1075	850
.50	1165	1025	805
.60	1080	980	735
.70	980	835	635

NOTE — All cfm is measured external to unit. Filter resistance not included.

GH19P3-75 BLOWER PERFORMANCE

External Static Pressure (in. wg)	Air Volume @ Various Speeds		
	High	Medium	Low
.10	1440	1315	1155
.20	1375	1255	1105
.30	1285	1190	1070
.40	1235	1130	1020
.50	1180	1055	960
.60	1075	985	890
.70	980	890	805

NOTE — All cfm is measured external to unit. Filter resistance not included.

GH19P4-75 BLOWER PERFORMANCE

External Static Pressure (in. wg)	Air Volume @ Various Speeds		
	High	Medium	Low
.10	1825	1665	1440
.20	1765	1630	1415
.30	1715	1580	1380
.40	1655	1535	1365
.50	1605	1480	1310
.60	1545	1430	1275
.70	1475	1365	1215

NOTE — All cfm is measured external to unit. Filter resistance not included.

GH19P3/4-100 BLOWER PERFORMANCE

External Static Pressure (in. wg)	Air Volume @ Various Speeds		
	High	Medium	Low
.10	1815	1570	1270
.20	1735	1520	1240
.30	1645	1455	1235
.40	1575	1395	1195
.50	1510	1315	1140
.60	1395	1230	1070
.70	1295	1140	1000

NOTE — All cfm is measured external to unit. Filter resistance not included.

BLOWER DATA

GH19P4/5-100 BLOWER PERFORMANCE

External Static Pressure (in. wg)	Air Volume @ Various Speeds		
	High	Medium	Low
.10	2210	1955	1455
.20	2150	1910	1445
.30	2085	1860	1395
.40	2020	1810	1360
.50	1960	1755	1330
.60	1885	1685	1285
.70	1810	1630	1240

NOTE — All cfm is measured external to unit. Filter resistance not included.

GH19P4/5-125 BLOWER PERFORMANCE

External Static Pressure (in. wg)	Air Volume @ Various Speeds		
	High	Medium	Low
.10	2125	1845	1485
.20	2075	1805	1445
.30	2010	1765	1405
.40	1975	1710	1355
.50	1925	1670	1315
.60	1845	1600	1255
.70	1775	1530	1180

NOTE — All cfm is measured external to unit. Filter resistance not included.

DIMENSIONS (inches)

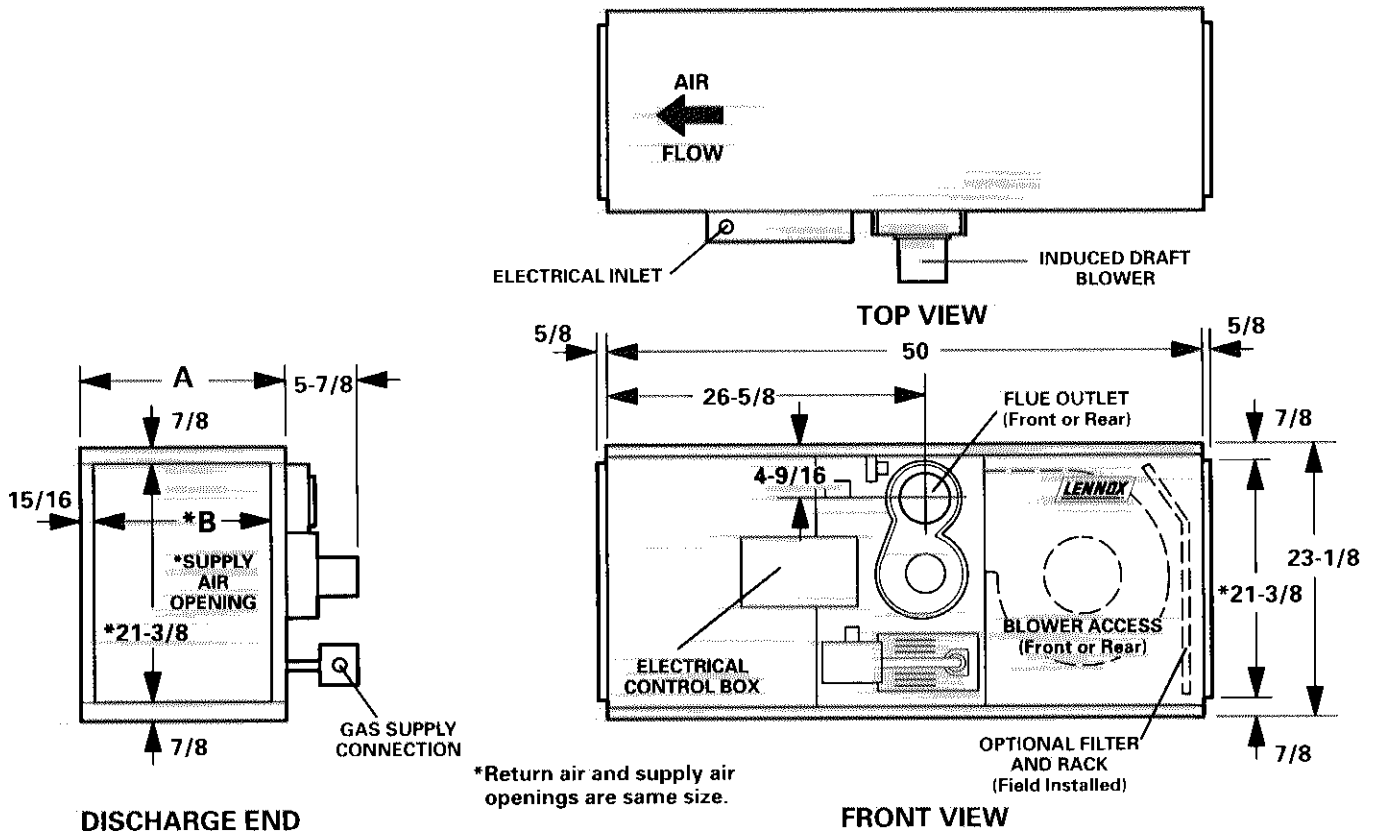

*Return air and supply air openings are same size.

Model No.	A	B
GH19P3-50 GH19P3-75 GH19P4-75	13-1/2	11-5/8
GH19P3/4-100 GH19P4/5-100	17	15-1/8
GH19P4/5-125	20-1/2	18-5/8

Technical Literature